# Tamarack Flush Mount

## 3.1 Solar Mounting System

# Installation Manual

# Table of Contents



## Technical Support: 707-234-8107 or 800-819-7236 ext.556

# Tamarack Flush Mount System Features

- Designed for mounting on typical residential roofs, pole mounts and ground mount systems
- Can be installed with typical roof attachments for composition shingle, tile and metal roofs
- Only 4 tools required for installation
- Top clamps and rail attachments require the use of  a 1/2-inch socket and a 9/16-inch socket
- One part for both mid-clamp and end-clamp use simplifies ordering and stocking parts
- Module clamps are spring loaded to ease module placement
- Built-in wire management for module and microinverter cables

# Tamarack Product Summary

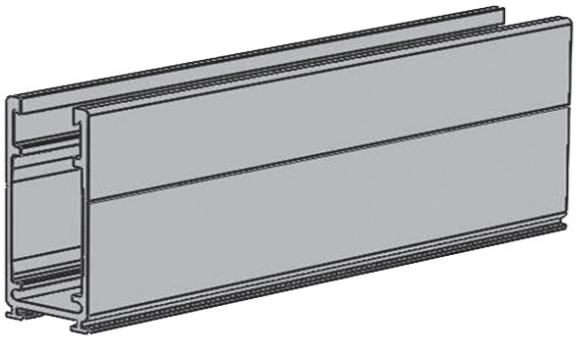

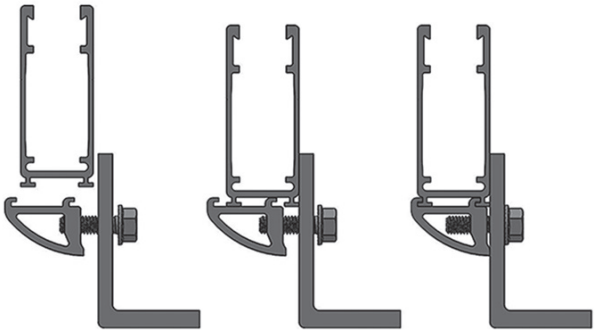

Flush mount is a visually appealing, low profile, photovoltaic (PV) module installation system that significantly lowers PV module installation cost by allowing the installation professional to stock fewer parts and to complete the installation in less time.

The 3.1 Rail is our heavy duty version for higher snow oads and longer spans between attachment spacing.

Certified to meet local and International Building Codes when installed in accordance with this manual. The design load rating meets the minimum requirements of 10 PSF downward pressure, 5 PSF upward pressure and 5 PSF down-slope load. Module orientation may be portrait or landscape. Designed for use with most third-party roof attachments including Solar Roof Hooks, Quick Mount PV, Ironridge Flashfoot, S-5 Clamps, etc.

Class A Fire Rating per UL 1703 for steep roof slope applications when using Type 1 or Type 2 Listed Photovoltaic Modules. This is per Middleton fire test report 103427989MID-004.

ETL Listed to UL 2307 for bonding and grounding when installed in accordance with this manual.

Rails, clamps, splices and mounting devices are UL2703 Listed for mounting flat-plate Photovoltaic Modules and Panels

5014275

# Tamarack Flush Mount System Components

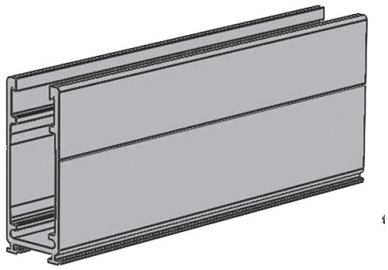

3.1 inch Rail

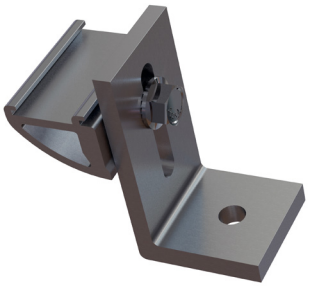

L-Foot Mount

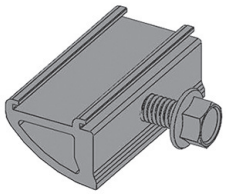

Rail Mount

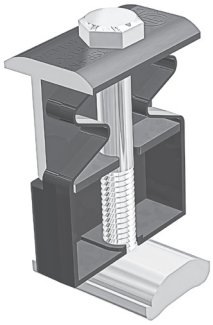

50-50 Clamp

Rail Splice

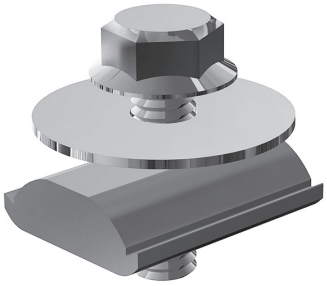

MLPE Adapter

Module Lead Clip

End Cap

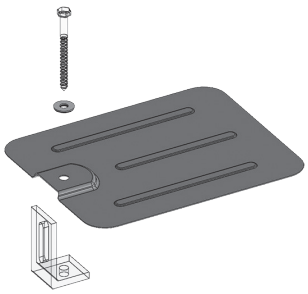

Flashing for L-Foot


Rail Ground Lug

Module Frame Ground Lug

## Tools Required

- Cordless Drill
- Torque Wrench
- Rachet and 1/2-inch Socket
- Level

## Torque Specifications

| | |
|---|---|
| **Rail Mount** | **12 ft-lbs** |
| **3.1 Splice** | **12 ft-lbs** |
| **MLPE Rail Attachment** | **12 ft-lbs** |
| **Ground Lug** | **12 ft-lbs** |
| **5050 clamp as Mid Clamp** | **12 ft-lbs** |
| **5050 clamp as End Clamp** | **6 - 9 ft-lbs** |
| **Rail Ground Lug** | **12 ft-lbs** |
| **Ilsco SGB-4 Module Frame Ground lug** | **12 ft-lbs** |

## Prepare for Installation

Plan the PV module layout  and confirm that plans comply with local AHJ requirements.

Leave enough room to work safely around the aray during the installation process. Some building and fire codes require minimum clearances around PV module installations.

The length of the rails for each row in the installation will be equal to the total width of the modules plus 1/2-inch for each 5050 clamp used between modules plus 2-inches total for end clamping.

## Splice and Install Rails

Rails are sold in convenient lengths to fit typical module frame widths. Use a structural splice to attach rail sections.

Insert the Splice 5-inches into one rail end. Install one of the provided Rail Splice Locks (roughly centered in the 5-inch insertion) and tighten to hold it in place. Slide the second section of rail over the splice until it contacts the first section of rail and install the second Rail Splice Lock. Tighten both Rail Splice Lock bolts to 144 inch-pounds (12 foot-pounds). Either locking bolt may be loosened and moved slightly if it interferes with mid-clamp placement when installing modules

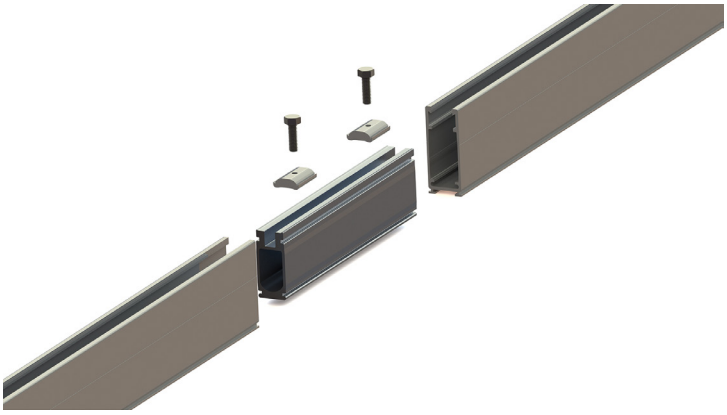

## Attach Rail Mounts

Each Rail-Mount consists of two parts, a bolt and a clamp extrusion. The rail adapters have been designed to interface with off-the-shelf mounting products that have vertical leveling slots. Our Rail Mounts work with typical products that have 5/16 inch or 3/8 inch bolt slots. We offer an L-foot for mounting to flat surfaces such as comp roofs, exposed beams, or products such as seam clamps or Q Blocks.

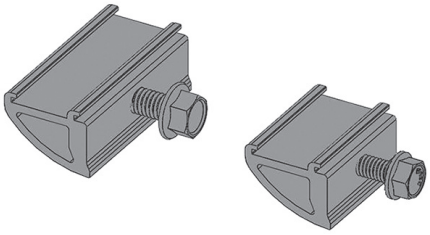

Rail mounting is simple and easy. The Rail Adapter clamps to the two features on the bottom of the rail. There is never any drilling, and parts can be brought on the roof fully assembled and ready to be installed. Rail Adapters may be installed anywhere on the rails, including at splices and they will not interfere with module mounting clamps. Simply position the adapter into the two feet on the bottom of the rail, and tighten the bolt slightly. Leave the bolt slightly lose to allow leveling of the rails in the next step.

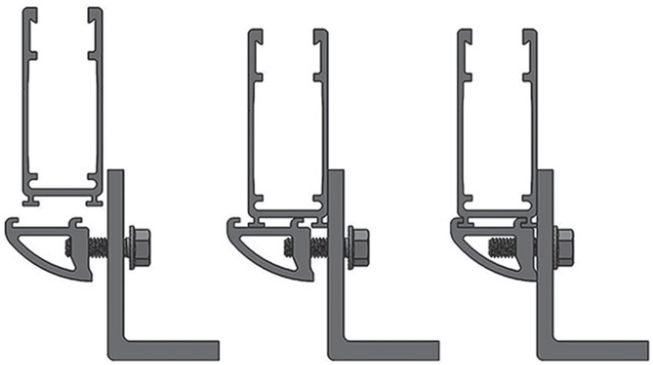

## Leveling Rails

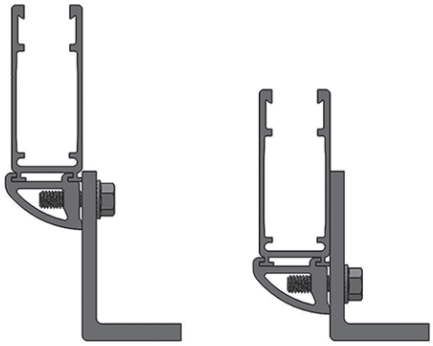

Start by leveling the bottom rail of the array first. Set the Rail Adapters near the middle of the leveling range and adjust as necessary to have visually level rails. Tighten the attachment bolts to the specified torque when they are aligned. Level the top rail of the array in the same manner.

If there are multiple rows of rails in the array, use a string level or straight edge to help adjust the remaining rows to be level with the top and bottom rails. It is also possible to visually align rails in the middle of the array.

Tighten all hardware to the specified torque.

## Grounding

Tamarack rails and PV modules are bonded by 50-50 Module Clamps and splices.
The 50-50 clamps achieve bonding to the module frames by stainless-steel pins in the clamping surface of the clamp tops, which penetrate module frame coatings. The rails and channel nuts are bonded because of the conductive surface of the mill finish aluminum used in the rail construction.

SolarEdge Optimizers and Enphase Microinverters are bonded to the rail with the Tamarack MPLE adapters.

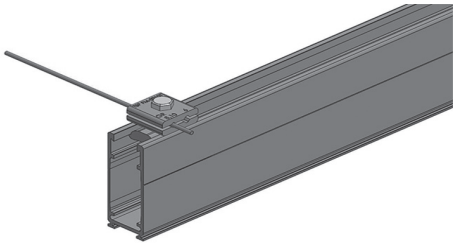

Bonding Method 1: Rail Lug
Use a Ground Clamp to bond a ground conductor to a rail. The ground clamp works with #10 - #6 AWG copper conductors.

Bonding Method 2: Frame Lug
Use a module ground lug to bond a module frame to a ground conductor. The resulting system is bonded primarily through the module frames.

# Grounding Diagrams

## Rail Grounding method

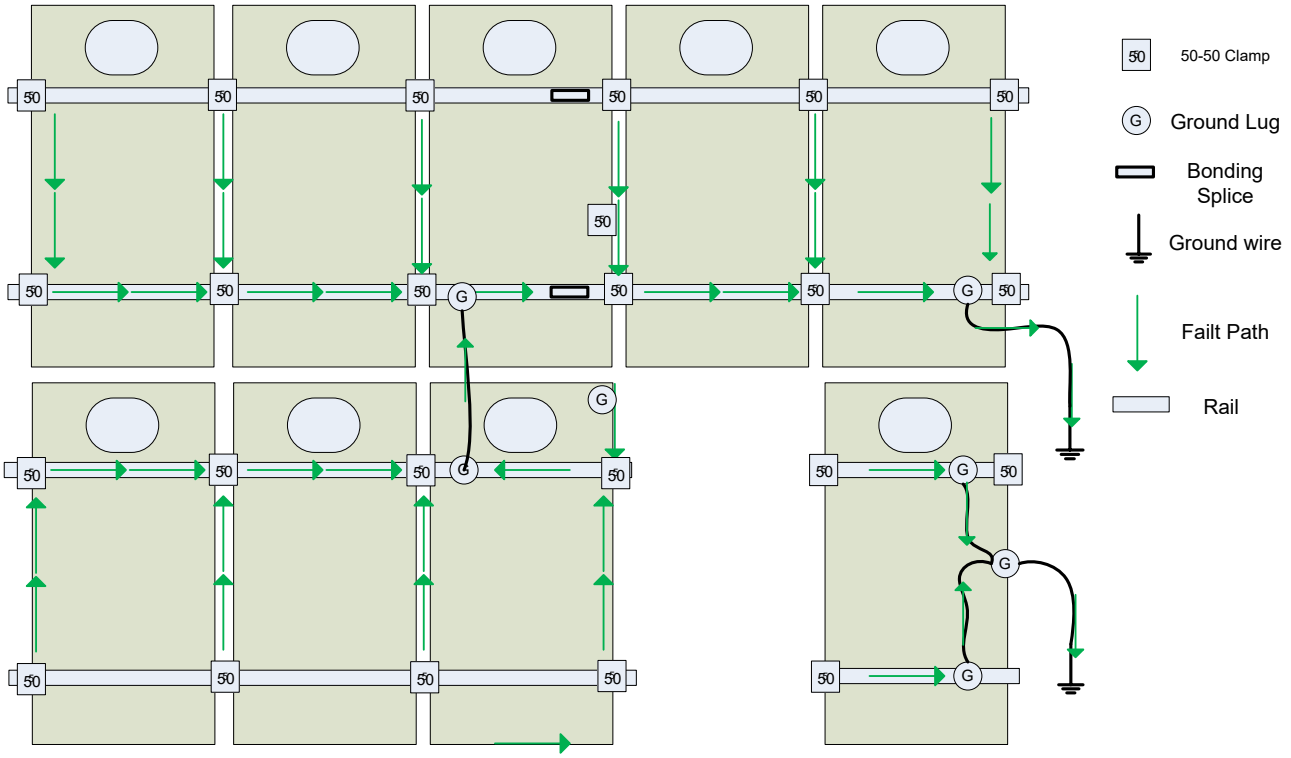


## Module Frame Grounding Method

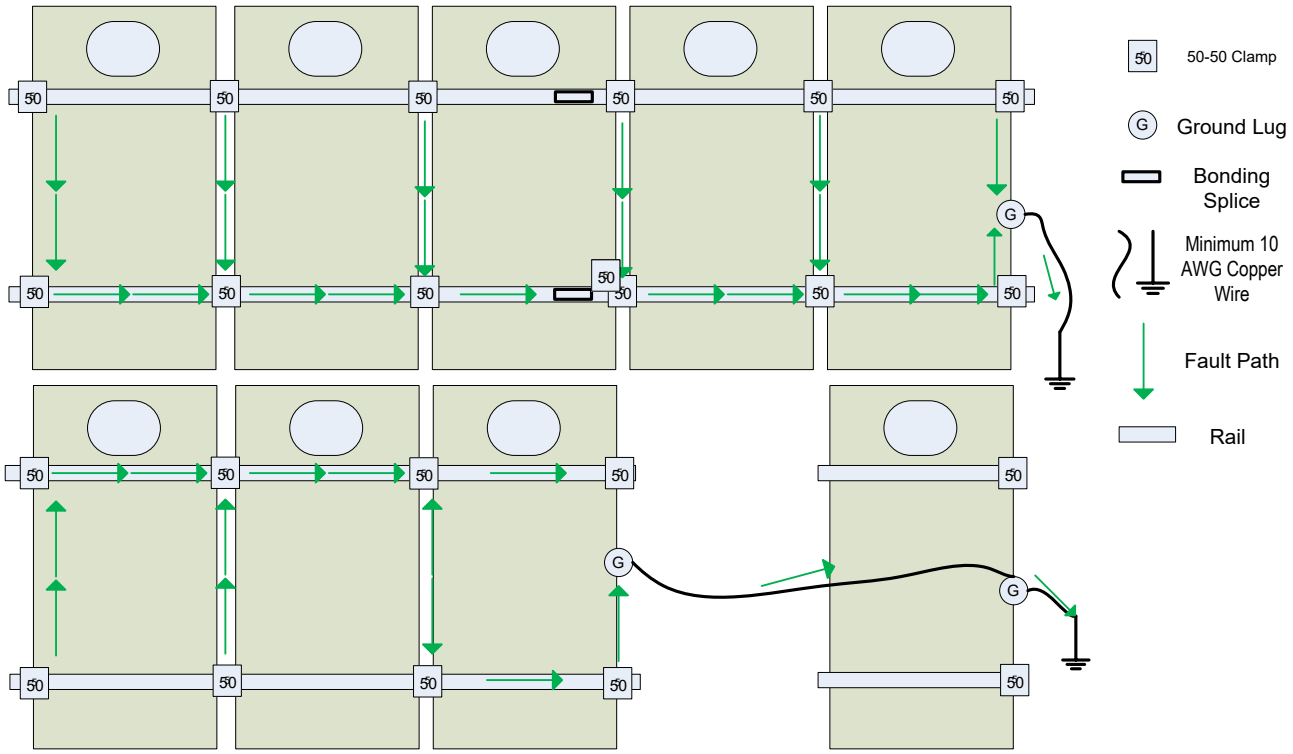

## Rail Grounding method with Optimizers or Micro-inverters

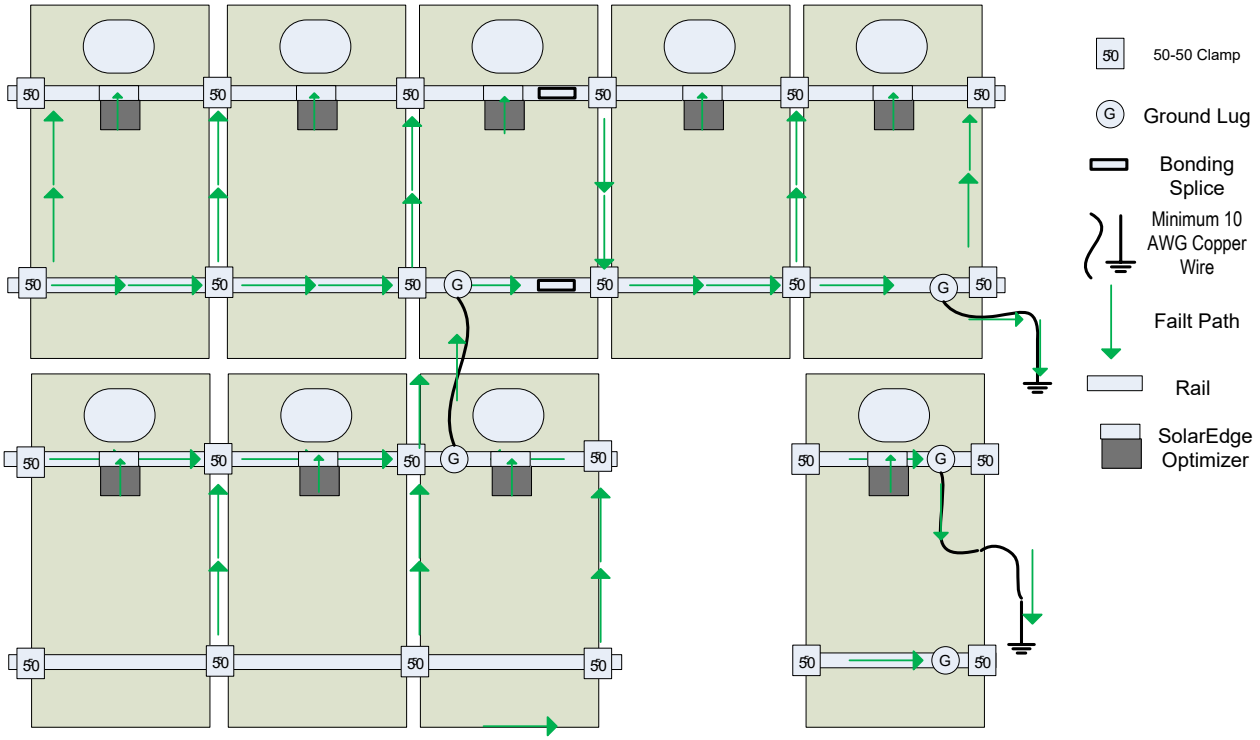


## Module Frame Grounding method with Optimizers or Micro-inverters

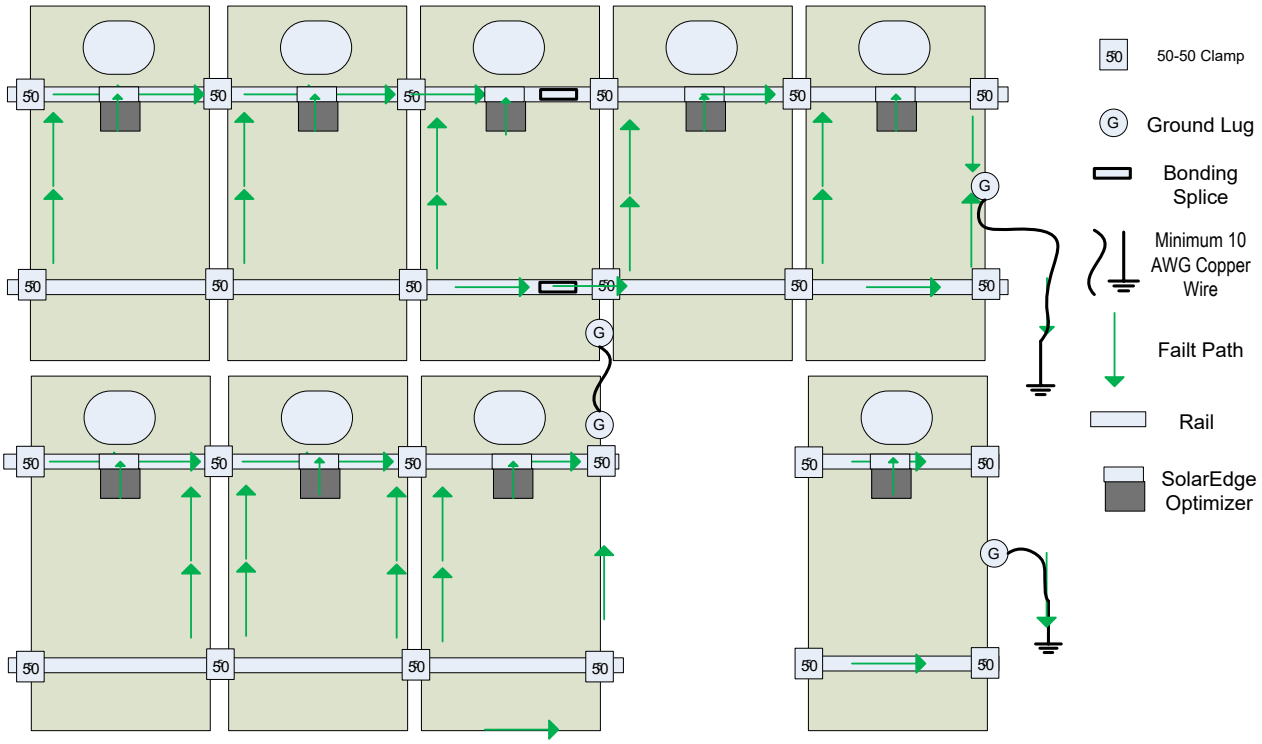

## Module Level Power Electronics

Use the Tamarack MLPE Rail Adapter to attach Enphase microinverters or SolarEdge Optimizers to the rails.
Tighten the bolt with a 1/2” socket to the proper torque.

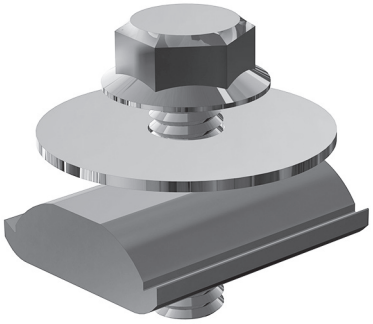

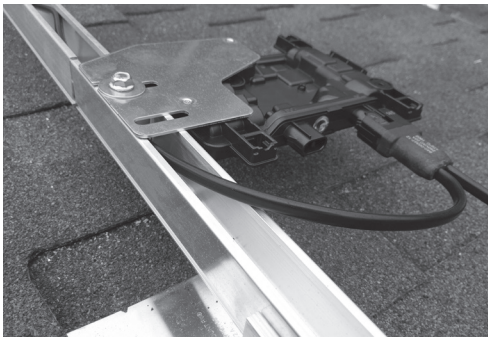

## Wire Management

Place electrical conductors and connectors at the bottom of the rail channels. Wires can be threaded through the hole in the splices. Check to be sure that they do not conflict with the self-drilling fasteners.
Install the Module Lead Clips where necessary to keep wires in the channels.

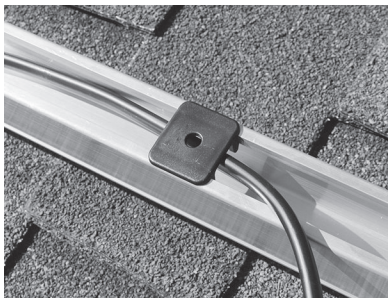

## Module Installation

Start module installation at one end of the rails. If there are multiple rows, start on the bottom row. Install a 50-50 clamp at the end of each rail with the side of the clamp with 2 bonding pins on the module frame. Push the channel nut into the rail. The integrated spring assembly will hold the clamp in place.

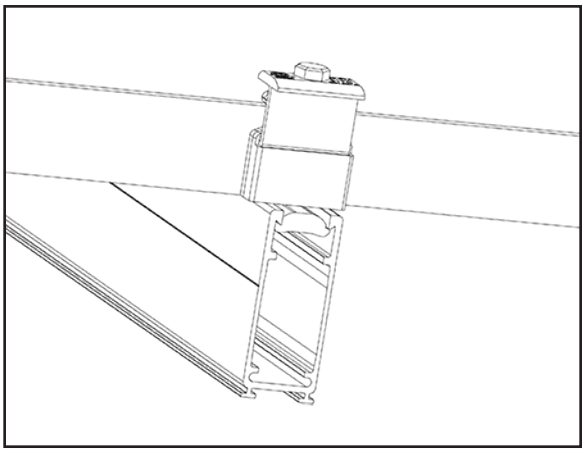

Place the first module onto the rails so that it is centered over the rails. Make sure the module is touching the inside edge of the clamps and tighten the clamps with a 1/2” socket.
Install 50-50 Clamps in each rail on the other side of the first module.  The springs will hold the clamps in place prior to tightening. Place the second module on the rails, align it with the first module, and push in against the clamps.  Tighten the clamps to fully secure the module.
Install the remaining modules and clamps on the rails in the same manner, aligning the corners of the modules.
On the outside edge of the last module, install the clamps so that the side with the two stainless-steel pins is on the module frame. Tighten all bolts to the specified torque.
Do a final check to  be sure that all installation hardware on the array is properly tightened.

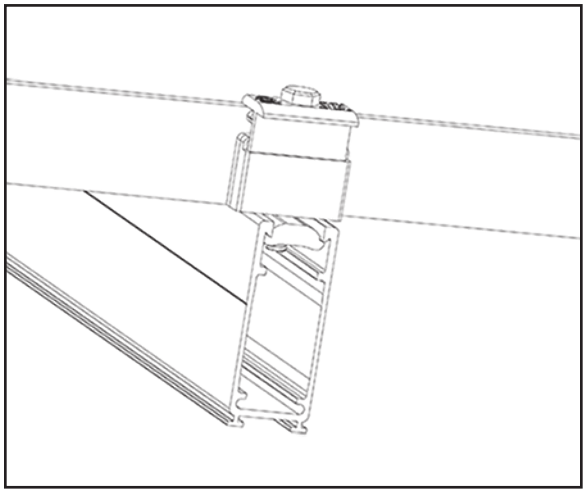

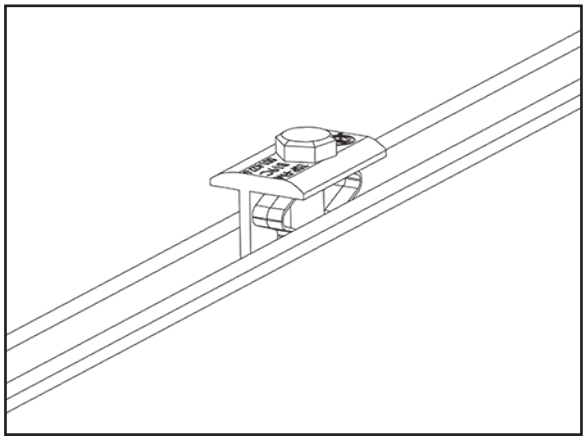

## End Caps

Place an End Cap at the end of each rail to improve the look of the system. End Caps can be pushed into rail ends without the need for a tool.
Drain holes on the bottom of the end caps ensure that water does not accumulate in the rails.

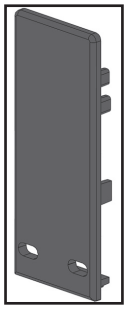

## Certified Module List for UL2703 Listing Program

| Manufacturer | Model |
|---|---|
| Aleo | P18/P19/S18/S19/S59/S79. |
| AU Optronics | PM Series |
| Astronergy | modules with 30, 35, 40, and 45 mm frames aaSMbbyyC/zz-xxx Where “aa” can be CH or A; "bb" can be 60, 66, or 72; “yy” can be blank, 10 or 12; "C" can M, P, M(BL), M-HC, M(BL)-HC, P-HC, M(DG), or M(DGT); and “zz” can be blank, HV, F-B, or F-BH |
| Auxin | modules with 40 mm frames AXN6y6zAxxx Where "y" can be M or P; "z" can be 08, 09, 10, 11, or 12; and "A" can be F or T |
| Axitec | Modules with 35 and 40 mm frames AC-xxxY/aaZZb Where "Y" can be M, P or MH; "aa" can be blank, 125- or 156-; "ZZ" can be 54, 60, 72, 120, or 144; "b" can be S |
| Boviet | Boviet modules with 35 and 40mm frames - BVMZZaaYY-xxxBcc Where "ZZ" can be 66 or 76; "aa" can be 9, 10 or 12; "YY" is M or P; and "B" can be blank, L or S; and "cc" can be blank, H, H-BF, H-BF-DG, H-HC, H-HC-BF, H-HC-BF-DG, HC-BF or HC-BF-DG] |
| BYD | BYD modules with 35 mm frames BYDxxxAY-ZZ Where "A" can be M6, P6, MH or PH; "Y" can be C or K; and "ZZ" can be 30 or 36 |
| Canadian Solar | Canadian Solar modules with 30, 32, 35, and 40 mm frames - CSbY-xxxZ Where "b" can be 1, 3 or 6; "Y" can be H, K, L, N, P, U, V, W, X or Y; and "Z" can be M, P, MS, PX, M-SD, P-AG, P-SD, MB-AG, PB-AG, MS-AG, or MS-SD |
| CentrsoSolar | C and E series. |
| Certainteed | CertainTeed modules with 35 and 40 frames CTxxxYZZ-AA Where "Y" can be M, P, or HC; "ZZ" can be 00,01, 10, or 11; and "AA" can be 01, 02, 03, or 04 |
| CSUN | Csun modules with 35 and 40 mm frames - YYxxx-zzAbb Where "YY" is CSUN or SST; "zz" is blank, 60, or 72; and "A" is blank, P, M or MM; "bb" is blank, BB, 5BB, BW, or ROOF |
| Dehui | Dehui modules with 30, 35 and 40mm frames - DH-MYYYZ-xxx Where "YYY" can be 760, 772, 860, 872; and "Z" can be B, F or W |
| Eco Solargy | ORION 1000 ECOXXXH156P-60, APOLLO 1000 ECOXXXT156M-60, and APOLLO 1000 ECOXXXA156M-60. |
| ET Solar | 30, 35, 40, and 50 mm frames ET-Y6ZZxxxAA Where “Y” can be P, L, or M; “ZZ” can be 60, 72 or 72BH; and “AA” can be GL, WB, WW, BB, WBG, WWG, WBAC, WBCO, WWCO, WWBCO or BBAC |
| GCL | 40mm frame: GCL-P6/72, 35mm frame: GCL-P6/72, GCL-P6/72H, GCL-M6/72, GCL-M6/72H, 35mm frame (Black frame): GCL-P6/60, GCL-M6/60 |
| GigaWatt Solar: | Gigawatt modules with 40 mm frames - GWxxxYY Where “YY” can be either PB or MB |
| Hanwha Q-Cells | Modules with 32, 35, 40, and 42mm frames aaYY-ZZ-xxx where "aa" can be Q. or B.; "YY" can be PLUS, PRO, PEAK, LINE PRO, LINE PLUS, PLUS DUO or PEAK DUO; and "ZZ" can be G3, G3.1, G4, G4.1, L-G2, L-G2.3, L-G3, L-G3.1, L-G3y, L-G4, L-G4.2, L-G4y, LG4.2/TAA, BFR-G3, BLK-G3, BFR-G3.1, BLK-G3.1, BFR-G4, BFR-G4.1, BFR G4.3, BLK-G4.1, G4/SC, G4.1/SC, G4.1/TAA, G4.1/MAX, BFR G4.1/TAA, BFR G4.1/MAX, BLK G4.1/TAA, BLK G4.1/SC, EC-G4.4, G5, G5/SC, G5/TS, BLK-G5, BLK-G5/SC, BLK-G5/TS, L-G5, L-G5.1, L-G5.2, L-G5.2/H, L-G5.3, G6, G6/SC, G6/TS, G6+/TS, G6+, BLK-G6, L-G6, L-G6.1, L-G6.2, L-G6.3, G7, BLK-G6+, BLK-G6+/AC, BLK-G6+/HL, BLK-G6+/SC, BLK-G6/TS, BLK-G6+/TS, BLK-G7, G7.2, G8, BLK-G8, G8+, BLK-G8+ L-G7, L-G7.1, L-G7.2, L-G7.3, L-G8, L-G8.1, L-G8.2, L-G8.3, L-G8.3/BFF, L-G8.3/BFG, L-G8.3/BGT, ML-G9, BLK ML-G9, ML-G9+, BLK ML-G9+, ML-G10, BLK ML-G10, ML-G10+, BLK ML-G10+, ML-G10.a, BLK ML-G10.a, ML-G10.a+, BLK ML-G10.a+, XL-G9, XL-G9.2, XL-G9.3, XL-G9.3/BFG, XL-G10.2, XL-G10.3, XL-G10.c, XL-G10.d, XL-G10.d/BFG or XL-G10.3/BFG |
| Hansol | Hansol modules with 35 and 40 frames HSxxxYY-zz Where "YY" can be PB, PD, PE, TB, TD, UB, UD, or UE; and "zz" can be AH2, AN1, AN3, AN4, HH2, HV1, or JH2] |
| Heliene | Heliene modules with 40 mm frames - YYZZxxxA Where "YY" can be 36, 60, 72, 96, 120 or 144; "ZZ" can be HC, M, P, or MBLK; and "A" can be blank, HomePV, or Bifacial] |
| HT Solar | HT60-156(M) (NDV) (-F), HT 72-156(M/P) |
| Hyundai | Hyundai modules with 33, 35, 40 and 50 mm frames - HiY-SxxxZZ Where "Y" can be A, D or S; "S" can be M or S; and "ZZ" can be GI, HG, HI, KI, MI, MF, MG, PI, RI, RG, RG(BF), RG(BK), SG, TI or TG |
| ITEK | 40 and 50 mm frames IT-xxx-YY Where “YY” can be blank, HE, or SE, or SE72 |
| JA Solar | 30, 35, 40 and 45 mm frames JAyyzz-bbww-xxx/aa Where “yy” can be M, P, M6 or P6; “zz” can be blank, (K), (L), (R), (V), (BK), (FA), (TG), (FA)(R), (L)(BK), (L) (TG), (R)(BK), (R)(TG), (V)(BK), (BK)(TG), or (L)(BK)(TG); “bb” can be 48, 60, or 72; “ww” can be D09, S01, S02, S03, S06, S09, S10, or S12; and “aa” can be BP, MR, SI, SC, PR, 3BB, 4BB, 4BB/RE, 5BB |
| Japan Solar | JPS-xxxP-60 (35mm), JPS-xxxM-60 (35mm), JPS-xxx-P-72 (40mm), JPS-xxxM-60-BB (35mm), JPS-xxx-P-72-BB (40mm) |
| Jinko | 35 and 40 mm frames JKMYxxxZZ-aa Where “Y” can either be blank or S; “ZZ” can be M, P, or PP; and “aa” can be blank, 60, 60B, 60H, 60L, 60BL, 60HL, 60HB, 60HBL, 6HBL-EP, 60-J4, 60B-J4, 60B-EP, 60(Plus), 60-V, 60-MX, 7RL3-V, 7RL3-TV, 72, 72B, 72-J4, 72B-J4, 72(Plus), 72-V, 72H-V, 72L-V, 72HL-V, 72-MX, 72H-BDVP, 72HL-TV, or 72HL-V-MX3 |
| Kyocera | KU26x-6MCA where x is 0 or 5. |
| LG | [LG modules with 35, 40, and 46 mm frames - LGxxxYaZ-bb Where "Y" can be A, E, M, N, Q, S; "a" can be A, 1, 2 or 3 "Z" can be C, K, T, or W; and "bb" can be A3, A5, A6, B3, B6, E6, G3, G4, J5, K4, L5, N5, V5 or V6] |
| LONGi | [Longi modules with 30, 35 and 40 mm frames - LRa-YYZZ-xxxM Where "a" can be 4, 5 or 6; "YY" can be blank, 60 or 72; and "ZZ" can be blank, BK, BP, HV, PB, PE, PH, HBD, HIB, HIH, HPB, HPH, or HIBD] |
| Mission Solar | 33 and 40 mm frames MSEbbxxxZZaa Where “bb” can be blank or 60A; “ZZ” can be blank, MM, SE, SO, SQ , SR, or TS; and “aa” can be blank, 1J, 4J, 4S, 5K, 5T, 60, 6J, 6S, 6W, 8K, 8T, or 9S |
| Mitsubishi | Mitsubishi modules with 46 mm frames - PV-MYYxxxZZ Where "YY" can be LE or JE; and "ZZ" can be either HD, HD2, or FB |

## Certified Module List for UL2703 Listing Program

| Manufacturer | Model |
|---|---|
| NSP | D6M and D6P |
| Panasonic | 30 mm frames EVPVxxxA, Where “A” can be blank or KPanasonic modules with 35 and 40 mm frames VBHNxxxYYzzA Where “YY” can be either KA, RA, SA or ZA; “zz” can be either 01, 02, 03, 04, 06, 06B, 11, 11B, 15, 15B, 16, 16B, 17, or 18; and “A” can be blank, E, G, or N |
| Peimar | 40 mm frames SbxxxYzz Where “b” can be G, M or P; “Y” can be M or P; and “zz” can be blank, (BF) or (FB) |
| Phono Solar | Phono Solar modules with 35, 40, and 45 mm frames - PSxxxY-ZZ/A Where "Y" can be M, M1, MH, M1H, M4, M4H or P; "ZZ" can be 20 or 24; and "A" can be F, T, U, UH, or TH] |
| Risen | RSM72-6 (MDG) (M), RSM60-6 |
| REC Solar | REC modules with 30, 38 and 45 mm frames - RECxxxYYZZ Where “YY” can be AA, M, NP, NP2, PE, PE72, TP, TP2, TP2M, TP2SM, TP2S, TP3M or TP4; and “ZZ” can be blank, Black, BLK, BLK2, SLV, 72, or Pure |
| Renesola | Virtus II with module ratings of 250-260 in increments of 5. 156 series with module ratings of 270-275. |
| S-Energy | S-Energy modules with 35 and 40mm frames - SABB-CCYYY-xxxZ Where "A" can be C, D, L or N; "BB" can be blank, 20, 25, 40 or 45; "CC" can be blank, 60 or 72; "YYY" can be blank, BDE, MAE, MAI, MBE, MBI, MCE or MCI; and "Z" can be V, M-10, P-10 or P-15 |
| Seraphim Energy Group | Seraphim modules with 30, 35, and 40 mm frames - SEG-aYY-xxxZZ Where "a" can be blank, 6 or B; "YY" can be blank, MA, MB, PA, or PB; and "ZZ" can be blank, BB, BG, BW, HV, WB, WW, BMB, BMA-HV, BMA-BG, BMB-HV |
| Seraphim USA | Seraphim modules with 30, 35, 40 and 50 mm frames - SRP-xxx-YYY-ZZ Where "xxx" is the module power rating; and "YYY" can be BMA, BMD, 6MA, 6MB, 6PA, 6PB, 6QA-XX-XX, and 6QB-XX-XX; ZZ is blank, BB, BG or HV |
| Sharp | 60 and 72 NUSA-xxx/NUSC-xxx |
| Silfab | Silfab Modules with 35 and 38 mm frames - SYY-Z-xxxAb Where "YY" can be IL, SA, LA, SG or LG; "Z" can be blank, M, P, or X; "A" can be blank, B, H, M, N; and "b" can be A, C, L, G, K, T, U or X |
| SolarWorld | Sunmodule Plus, Protect, Bisun, XL, Bisun XL, may be followed by mono, poly, duo, black, bk, or clear; modules with 31, 33 or 46 mm frames SW-xxx, SolarWorld Sunmodule Plus, Protect, Bisun, XL, Bisun XL, may be followed by mono, poly, duo, black, bk, or clear; modules with 33 mm frames SWA-xxx |
| Solaria | 40 mm frames PowerXT xxxY-ZZ Where “Y” can be R or C; and “ZZ” can be AC, BD, BX, BY, PD, PM, PM-AC, PX, PZ, WX or WZ |
| Sonali | SS 230 - 265 |
| SunEdison | SunEdison Modules with 35, 40 & 50 mm frames - SE-YxxxZABCDE Where "Y" can be B, F, H, P, R, or Z; "Z" can be 0 or 4; "A" can be B,C,D,E,H,I,J,K,L,M, or N ; "B" can be B or W; "C" can be A or C; "D" can be 3, 7, 8, or 9; and "E" can be 0, 1 or 2 |
| Suniva | Suniva modules with 35, 38, 40, 46, and 50 mm frames - OPTxxx-AA-B-YYY-Z and MVXxxx-AA-B-YYY-Z Where "AA" is either 60 or 72; "B" is either 4 or 5; "YYY" is either 100,101,700,1B0, or 1B1; and "Z" is blank or B |
| Sunpower | Sunpower standard (G3 or G4) or InvisiMount (G5) 40 and 46 mm frames - SPR-Zb-xxx-YY Where "Z" is either A, E, P or X; “b” can be blank, 17, 18, 19, 20, 21, or 22; and “YY” can be blank, BLK, COM, C-AC, D-AC, E-AC, BLK-E-AC, G-AC, BLK-C-AC, or BLK-D-AC |
| SunSpark | 40 mm frames SYY-xxxZ-A Where “YY” can be MX or ST; and “Z” can be M, MB, M3, M3B, P or W; and "A" can be 60 or 72 |
| Suntech | 35, 40 and 50mm frames STPxxxy-zz/aa Where "y" is blank or S; and "zz" can be 20, 24, A60 or A72U; and "aa" can be Vd, Vem, Vfw, Vfh, Wdb, Wde, Wd, or Wfhb |
| Talesun | Talesun modules with 30, 35 and 40mm frames - TA6yZZaaxxx-b Where "A" can be D or P, "y" can be blank, F, G, H, I, or L; "ZZ" can be 60 or 72; "aa" can be M, M(H), or P; and "b" can be blank, B, T, or (H) |
| Tesla | Tesla modules with 40 mm frames - TxxxY Where "Y" can be H or S |
| Trina Solar | Trina Modules with 30, 35, 40 and 46mm frames - TSM-xxxYYZZ Where "YY" can be DD05, DD06, DD14, DE14, DE15, DE15V, DEG15, DEG15VC, DE19, DEG19C.20, DE06X, PA05, PC05, PD05, PD06, PA14, PC14, PD14, PE14, or PE15 ; and "ZZ" can be blank, .05, .05(II), .08, .10, .18, .08D, .18D, 0.82, .002, .00S, 05S, 08S, .20(II), A, A.05, A.08, A.10, A.18, (II), A(II), A.05(II), A.08(II), A.082(II), A.10(II), A.18(II), H, H(II), H.05(II), H.08(II), HC.20(II), HC.20(II), M, M(II), M.05(II), MC.20(II) |
| Upsolar | UP-MxxxP, UP-MxxxP-B, UP-MxxxM, UP-MxxxM-B |
| Vikram | 40 mm frames VSyy.ZZ.AAA.bb Where "yy" can be M, P, MBB, MH, MS, MHBB, or PBB; "ZZ" can be 60 or 72; "AAA" is the module power rating; and "bb" can be 03.04 or 05 |
| Yingli | YL xxx P-29b, YLM 60, YLM 72, YGE, YGE-VG, YLM, YL xxx P-35b, YL xxx D-30b, YL xxx D-36b |
| Waaree | AC, Adiya 60/72 Mono/Poly Black, Adiya 60/72 Multi |
| Winaico | 35 and 40 mm frames Wsy-xxxZa Where "y" can be either P or T; "Z" can be either M, P, or MX; and "a" can be blank or 6 |

## Certified Power Optimizer List for UL2703 Listing Program

| Manufacturer | Model |
|---|---|
| Enphase | M250-72, 250-60, M215-60, C250-72, S230, S280, IQ 6, IQ 6+, IQ 7, IQ 7+, IQ 7X, Q Aggregator |
| Solar Edge | P300, P320, P340, P370, P400, P405, P505, P600, P700, P730, P800p, P800s, P850, P860 |

## Disclaimer

This manual describes proper installation procedures and provides necessary standards required for product reliability. Warranty details are available on our website. www.tamaracksolar.com
All installers must thoroughly read this manual and have a clear understanding of the installation procedures prior to installation. Failure to follow these guidelines may result in property damage, bodily injury or even death.

## Installer Responsibilities

- Follow all applicable local or national building and fire codes, including any that may supersede this manual.
- Electrical installation should be conducted by a licensed and bonded electrician or solar contractor.
- Module maintenance or removal must not break the bonding path of the system.
- Ensure all products used are appropriate for the installation and array under the site's loading conditions.
- Use only Tamarack parts or parts approved by Tamarack; substituting parts may void any applicable warranty.
- Comply with all applicable fire codes including, but not limited to, keeping walkways clear.
- Ensure bare copper grounding wire does not contact aluminum and zinc-plated steel components, to prevent risk of galvanic corrosion.
- If loose components or loose fasteners are found during periodic inspection, retighten immediately. If corrosion is found, replace affected components immediately.
- Provide an appropriate method of direct-to-earth grounding according to the latest edition of the National Electrical Code, including NEC 250: Grounding and Bonding, NEC 690: Solar Photovoltaic Systems, and CSA C22.1, Safety Standard for Electrical Installations, Canadian Electrical Code, Part 1
- Disconnect AC power before servicing or removing microinverters and power optimizers.
- Review module manufacturer's documentation to ensure compatibility and compliance with warranty terms and conditions.
- Maximum Series Fuse Rating is 20 Amps.

## Technical Support: 707-234-8107 or 800-819-7236 ext.556