February 16, 2023

MT Solar
54179 Herak Road
Charlo, MT 59824

RE: Solar ground mount footing and assembly for the Tamarack Solar residence, 288 F Street, Arcata, CA 95521

As per your request I have evaluated the proposed footings and assembly for the solar array. The solar array consists of 6 panels with 1 footing.

Wind speed	120 mph (ASCE 7-16)
Exposure Category	B
Soil Lateral Pressure	150 psf/ft
Soil Vertical Pressure	2000 psf

It is my recommendation that the MT Solar design (TE-101) will adequately support the solar array. Footing should be reinforced according to detail 7. The contractor shall notify the engineer if there are any discrepancies including soil profile. Right Angle Engineering assumes no responsibility for improper installation of solar panels or their components. Alterations to this engineering design and/or sealed plans shall not be made without direct written consent of the engineer of record.

Respectfully,

REGISTERED PROFESSIONAL ENGINEER
ROBERT DOUGLAS SMYTHE
C56136
EXP.
CIVIL
STATE OF CALIFORNIA

2/16/23

Robert D Smythe, P.E.
Right Angle Engineering

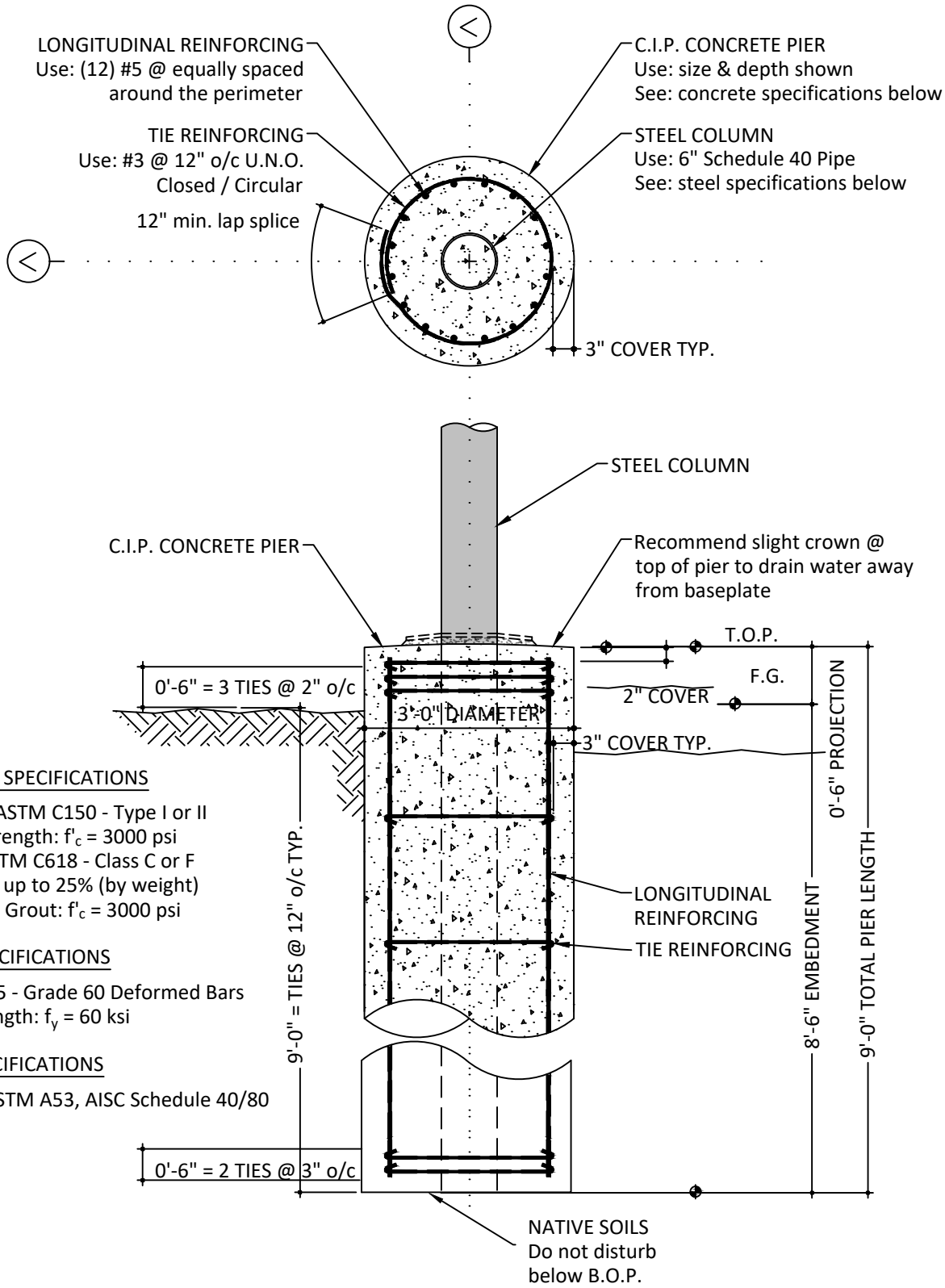

CONCRETE SPECIFICATIONS

Concrete: ASTM C150 - Type I or II
28-Day Strength: f'_c = 3000 psi
Fly Ash: ASTM C618 - Class C or F
permitted up to 25% (by weight)
Non-shrink Grout: f'_c = 3000 psi

REBAR SPECIFICATIONS

ASTM A615 - Grade 60 Deformed Bars
Yield Strength: f_y = 60 ksi

STEEL SPECIFICATIONS

Column: ASTM A53, AISC Schedule 40/80

Detail 7

Xref .\TB - RAE Letter|

Your Project Calculations

Project ID: MTSOLAR_26AJDGC372AD3

S3D Model Link:
https://platform.skyciv.com/structural?preload_name=MTSOLAR_26AJDGC372AD3&preload_path=Shared%20Enterprise%20Folder/MT_Solar_Projects/2_2023

Public Model Link:
https://platform.skyciv.com/structural-viewer?project_id=581Ry7nA5wAlEg2VH3VWXp6ZM8aCxEeVbqD3cn7gH1UKIgf4Dl3EPczZyfCaoHMF

Array Specification

Product:	Cyber
Unique ID:	1P-0-6TOP-SD-24-L-3Hx2W
Duty Classification:	SD
Module Width:	43.00 in
Module Length:	78.00in
Number of Rows:	3
Number of Columns:	2
Total Number of Modules:	6
Desired Tilt Angle:	45
Front Edge Clearance:	6
Total Array Height at Tilt:	13.65 ft
Total Frame Length:	11.50 ft
Frame Weight:	393 lbs
Array Dimensions N/S:	10.88 ft
Array Dimensions E/W:	13.17 ft
Rail Length:	130.50 in
Rail Spacing:	3.29 ft
Rail Check:	

Support Specifications

Pole Size:	6in Pipe Sch 40
Pole Length above Grade:	9.84 ft
Number of Poles:	1
Pole Spacing:	0

Foundation Specifications

Foundation Type:	Round
Foundation Dimensions:	Ø36 in
Foundation Depth (below grade):	Pile 1: 8.50 ft
Foundation Volume:	2.225 y^3
Foundation Result:	PASSED

Site Info

Risk Category:	I
Exposure:	B
Soil Classification:	sand
Site Location:	Arcata, CA, USA
Wind Speed:	120 mph
Snow Load:	50 psf
Design Uplift Pressure:	Multiple pressures
Design Downforce Pressure:	Multiple pressures
Design Snow Pressure:	0.009720 ksf

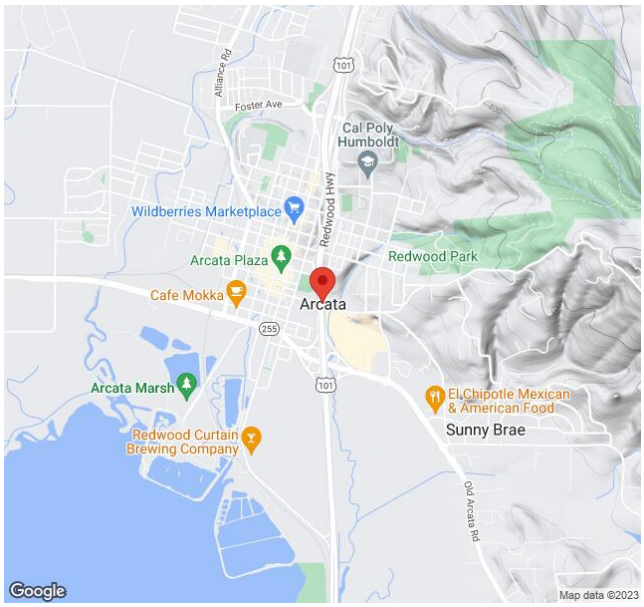

Design Disclaimer

This software should be used for preliminary designs and should not be used as a final design unless reviewed, verified and designed by a qualified structural engineer.

AutoDesigner Input


```
{"product_type":"Cyber","project_id":"MTSOLAR_26AJDGC372AD3","site_address":"Arcata, CA,
USA","module_width":43,"module_length":78,"number_rows":"3","number_columns":2,"pole_mount_section":"6_40","core_pipe_width":36,
"core_pipe_section":"2.5_80","adjuster_section":"2_80","core_beam_height":60,"core_beam_section":"HSS3x2x3/16","main_pipe_sectio
n":"2_80","pole_spacing":"15","tilt_angle":45,"ground_clearance":6,"risk_category":"I","exposure_category":"B","pole_override":"
auto","soil_type":"sand","foundation_type":"Round","foundation_size":36,"check_rails":true,"wind_speed_override":120,"snow_load_
override":50,"direct_snow_load":false}
```


Design Notes:

- AISC Deflection checks are set to L/1 due to structure design intent

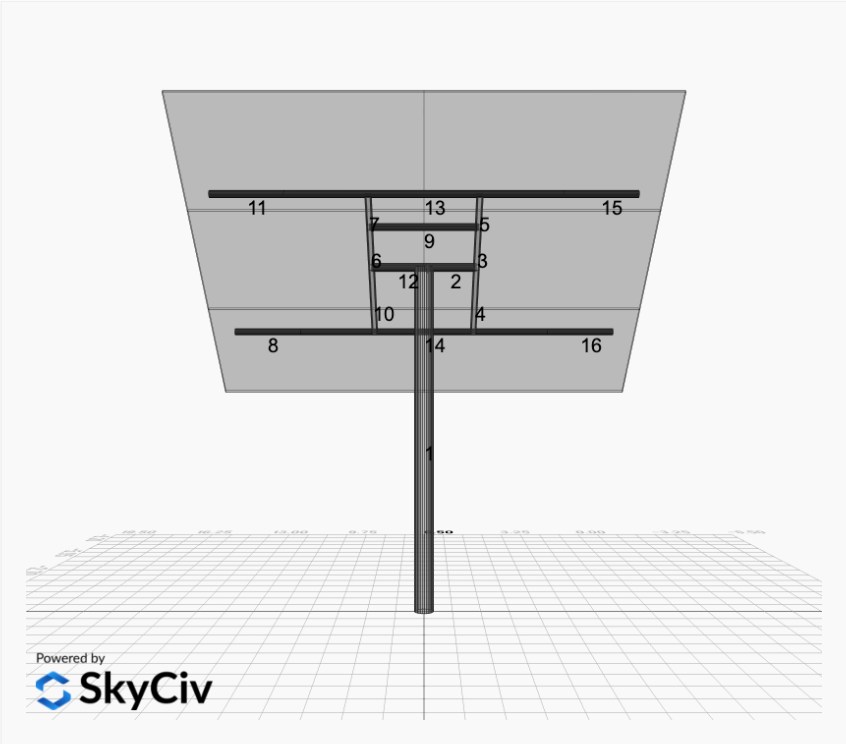

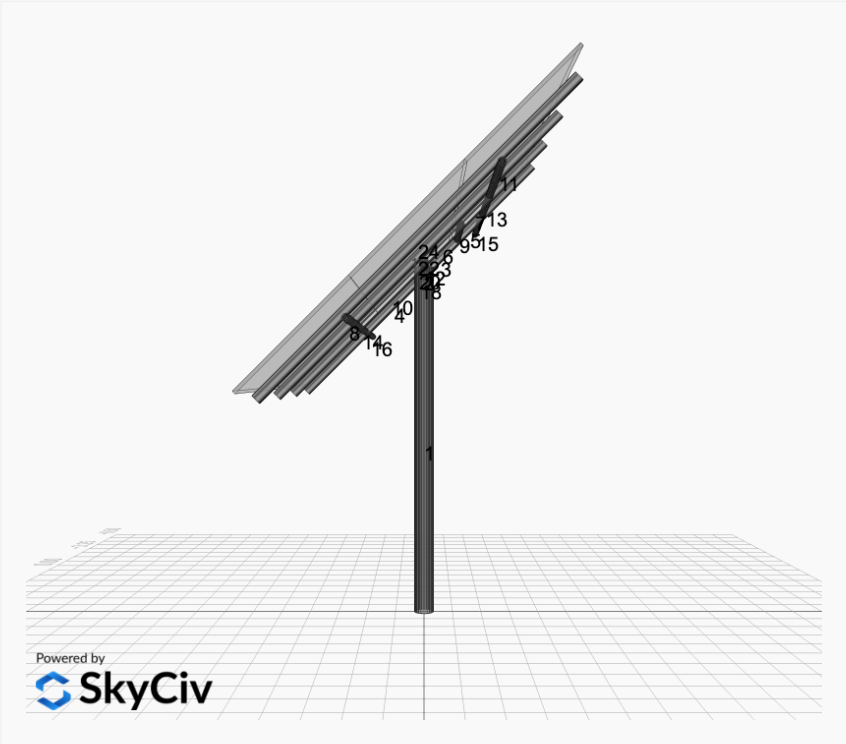
Powered by
SkyCiv

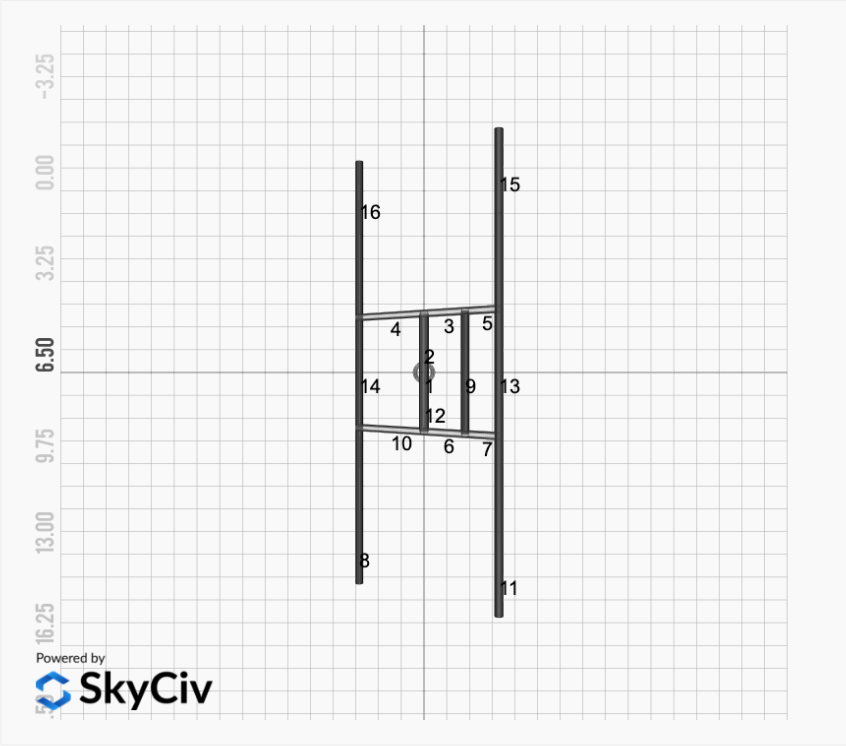
-3.25
0.00
3.25
6.50
9.75
13.00
16.25
Powered by
SkyCiv

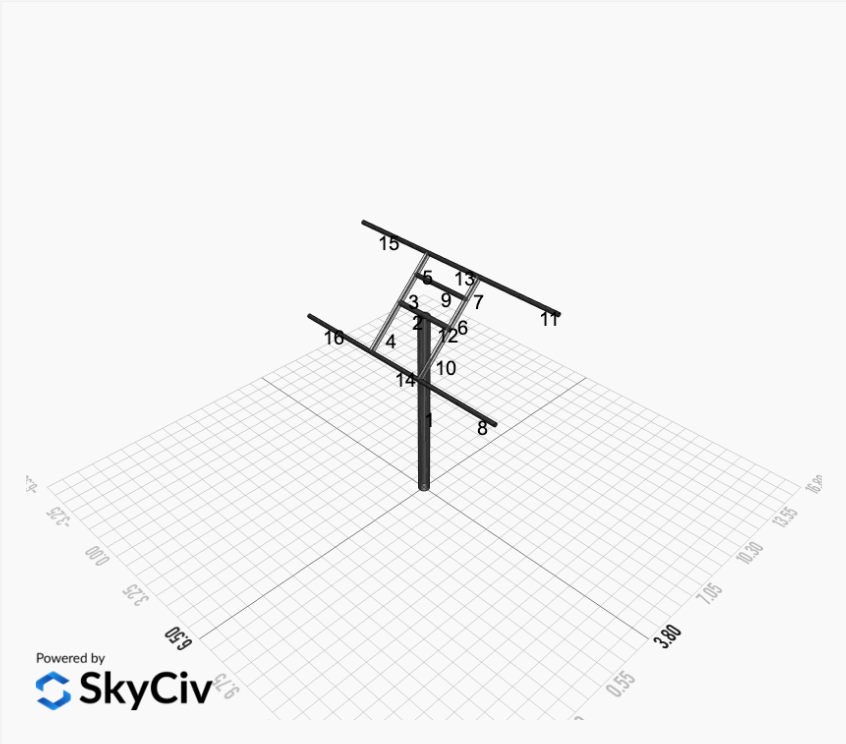
15
5
13
3
9
7
11
2
12
6
16
4
10
14
1
8
6.30
3.60
Powered by
SkyCiv

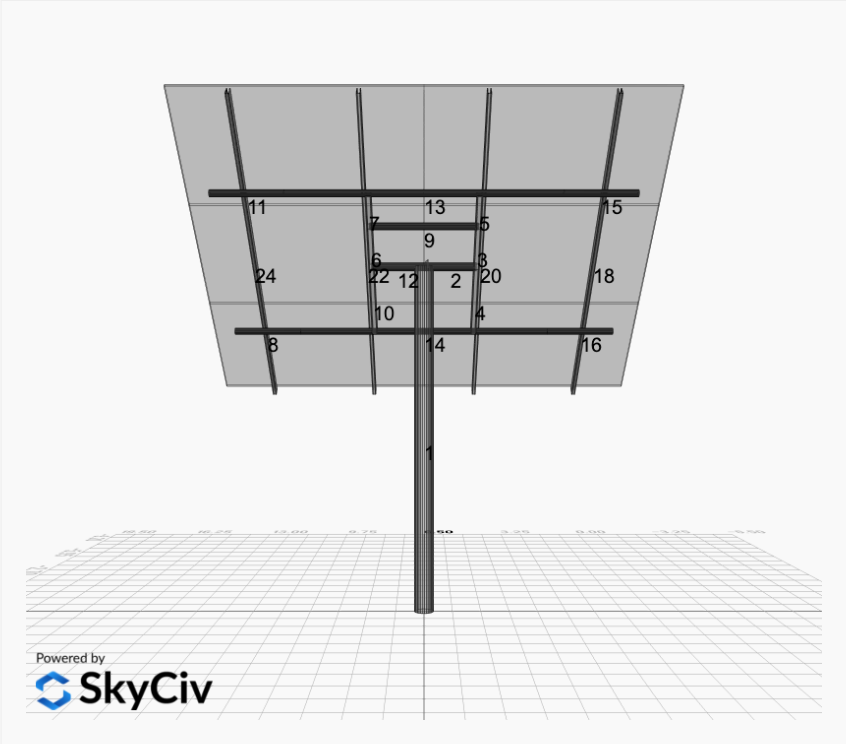
11
13
15
7
5
9
6
3
24
22
12
2
20
18
10
4
8
14
16
1
Powered by
SkyCiv

FEM Results (Envelope Worst Case for each member)

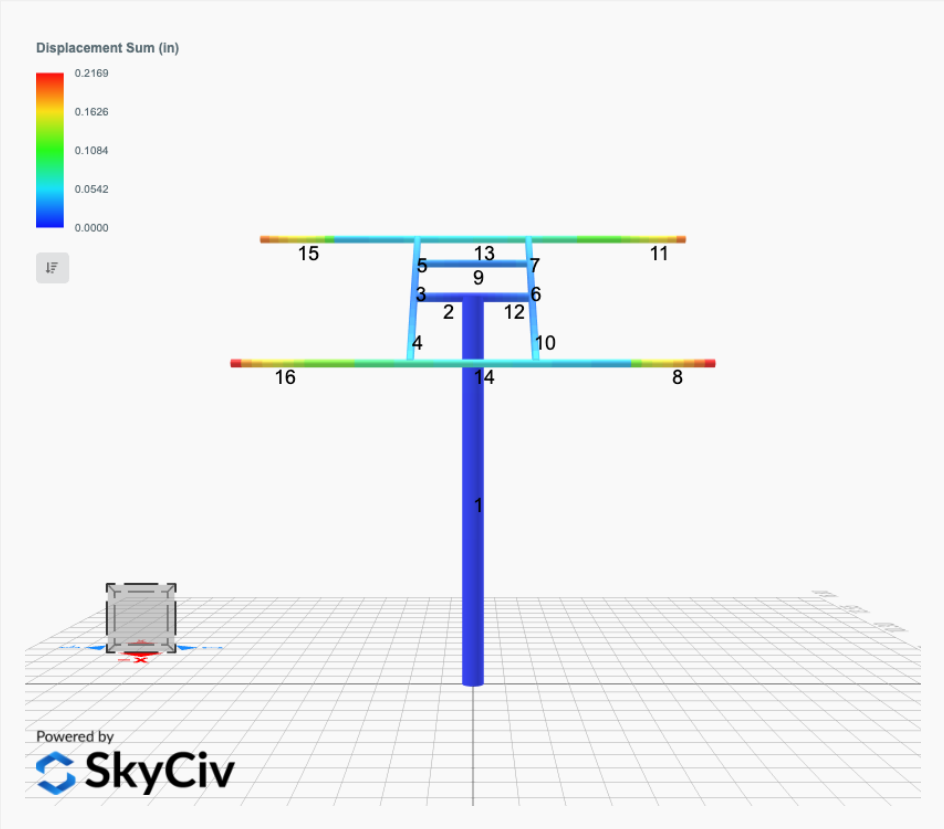

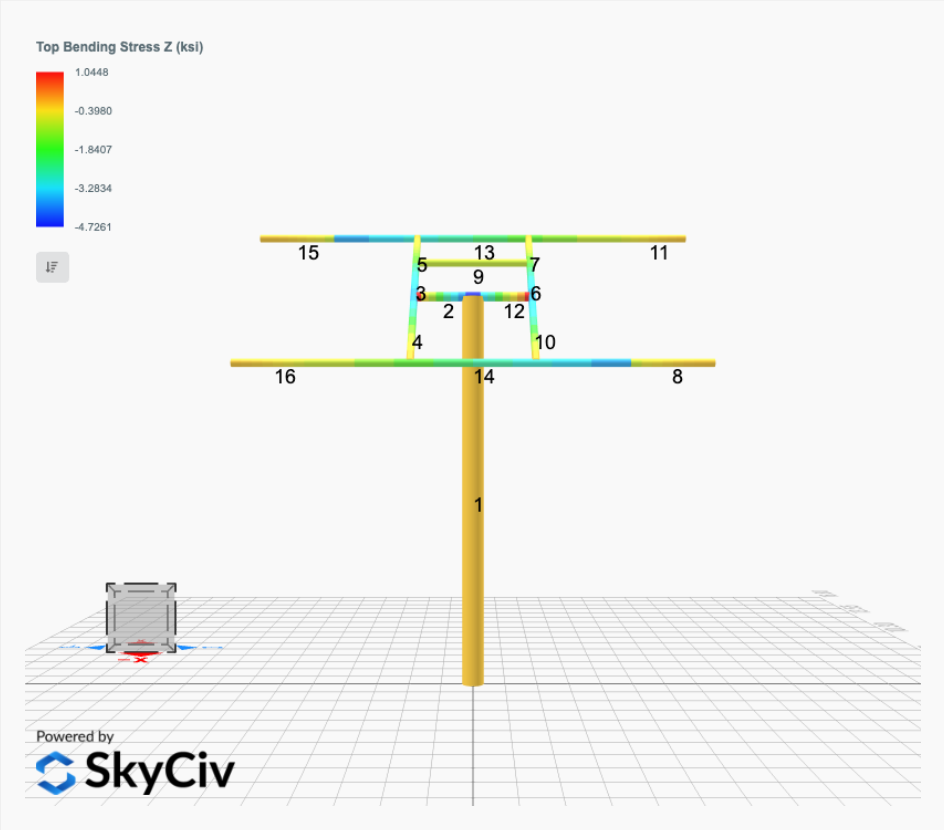

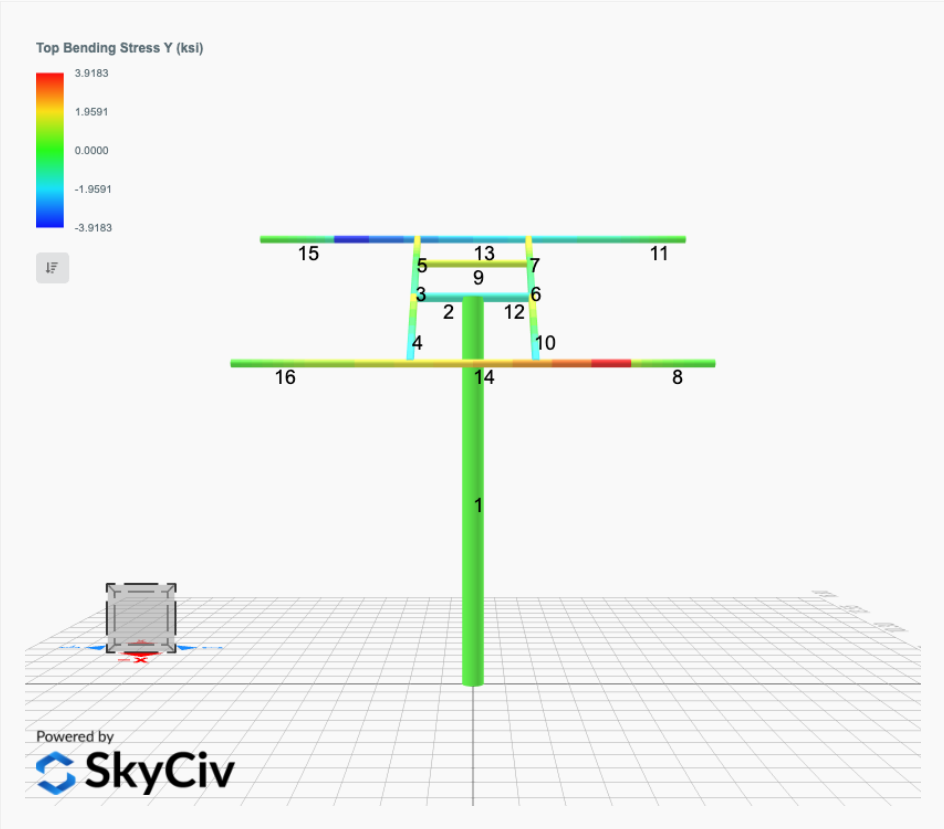
Top Bending Stress Y (ksi)
3.9183
1.9591
0.0000
-1.9591
-3.9183
15
13
11
5
9
7
3
6
2
12
4
10
16
14
8
1
Powered by
SkyCiv

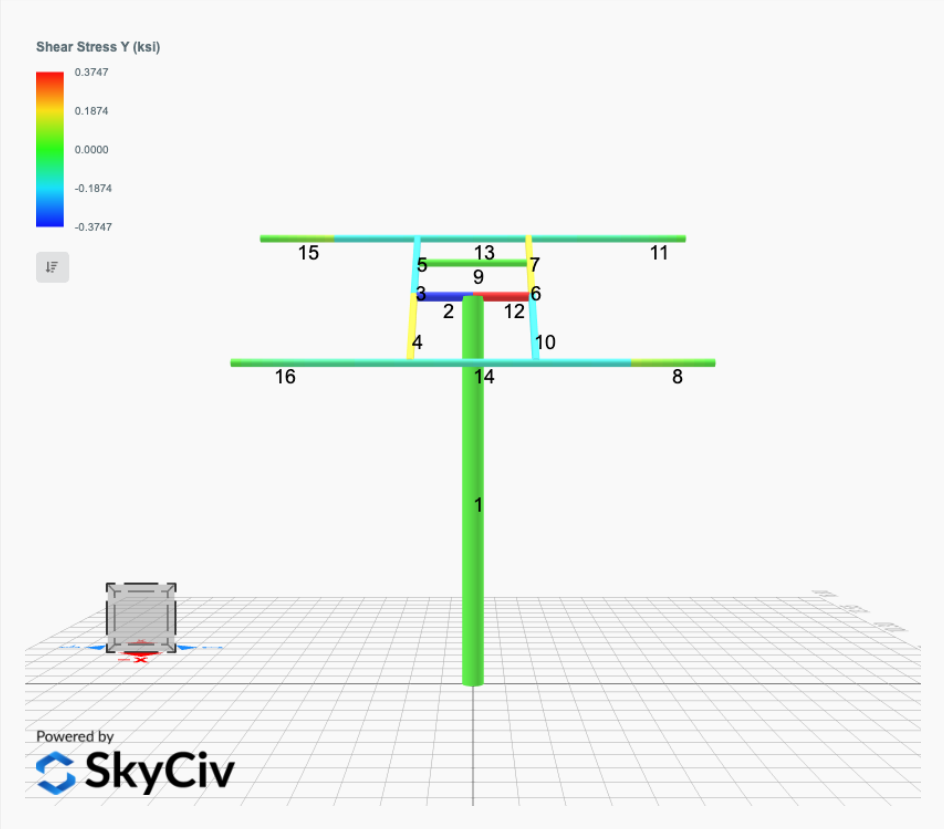
Shear Stress Y (ksi)
0.3747
0.1874
0.0000
-0.1874
-0.3747
15
13
11
5
9
7
3
6
2
12
4
10
16
14
8
1
Powered by
SkyCiv

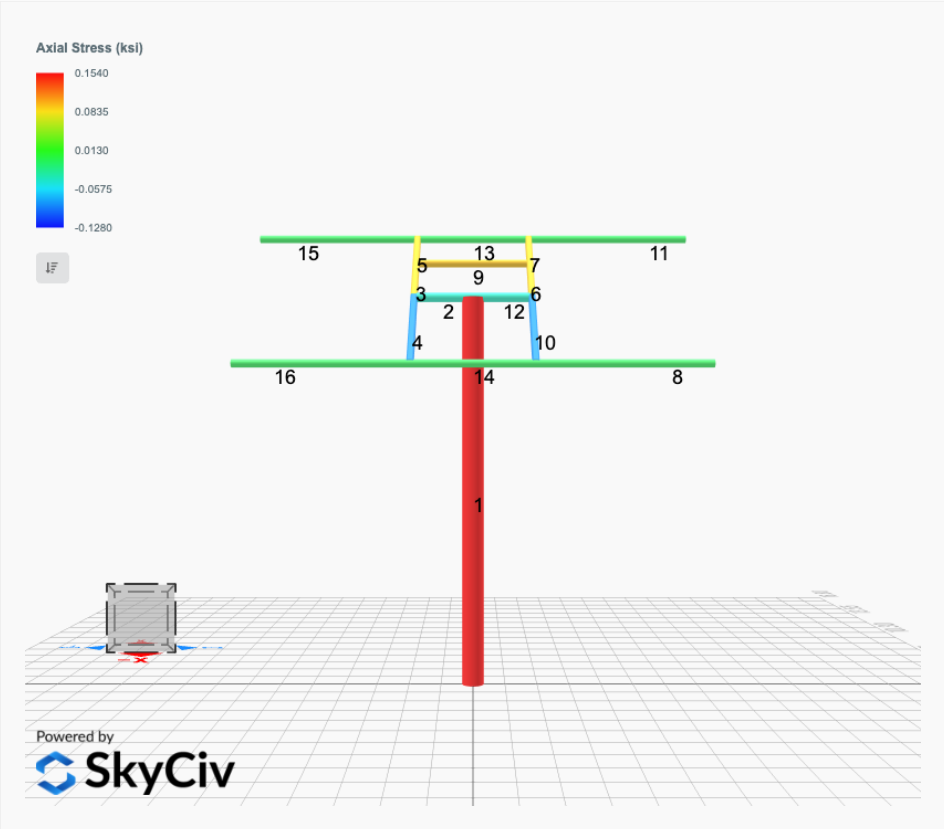
Axial Stress (ksi)
0.1540
0.0835
0.0130
-0.0575
-0.1280
15
13
11
5
9
7
3
2
12
6
4
10
16
14
8
1
Powered by
SkyCiv

Reaction Forces for Foundation 1 (Node ID#1), (kip, kip-ft)

ASD Load Combination Results

Name	Fx	Fy	Fz	Mx	My	Mz
ULS: 1. D	0.0000	1.0858	0.0000	0.0000	-0.0000	0.0161
ULS: 2. D + L	0.0000	1.0858	0.0000	0.0000	-0.0000	0.0161
ULS: 3. D + (S or Lr or R)	0.0000	1.9453	0.0000	0.0000	-0.0000	0.0174
ULS: 3. D + (S or Lr or R)	0.0000	1.0858	0.0000	0.0000	-0.0000	0.0161
ULS: 4. D + 0.75L + 0.75(S or Lr or R)	0.0000	1.7305	0.0000	0.0000	-0.0000	0.0171
ULS: 4. D + 0.75L + 0.75(S or Lr or R)	0.0000	1.0858	0.0000	0.0000	-0.0000	0.0161
ULS: 5b. D + 0.7E	0.0000	1.0858	0.0000	0.0000	-0.0000	0.0161
ULS: 6b. D + 0.75L + 0.75(0.7)E + 0.75S	0.0000	1.7305	0.0000	0.0000	-0.0000	0.0171
ULS: 8. 0.6D + 0.7E	0.0000	0.6515	0.0000	0.0000	-0.0000	0.0096
ULS: 5a. D + 0.6W_Wind downforce Case A only	-2.1829	3.2688	0.0000	0.0000	-0.0000	22.4723
ULS: 5a. D + 0.6W_Wind downforce Case B only	-2.1829	3.2688	0.0000	0.0000	-0.0000	22.4723
ULS: 5a. D + 0.6W_Wind uplift Case A only	1.5791	-0.4933	-0.0000	0.0000	-0.0000	-14.9802
ULS: 5a. D + 0.6W_Wind uplift Case B only	1.3934	-0.3075	0.0000	0.0000	-0.0000	-16.0987
ULS: 6a. D + 0.75L + 0.75(0.6)W + 0.75(S or Lr or R)_Wind downforce Case A only	-1.6372	3.3677	0.0000	0.0000	-0.0000	16.8593
ULS: 6a. D + 0.75L + 0.75(0.6)W + 0.75(S or Lr or R)_Wind downforce Case B only	-1.6372	3.3677	0.0000	0.0000	-0.0000	16.8593
ULS: 6a. D + 0.75L + 0.75(0.6)W + 0.75(S or Lr or R)_Wind uplift Case A only	1.1844	0.5461	-0.0000	0.0000	-0.0000	-11.2301
ULS: 6a. D + 0.75L + 0.75(0.6)W + 0.75(S or Lr or R)_Wind uplift Case B only	1.0450	0.6854	0.0000	0.0000	-0.0000	-12.0690
ULS: 6a. D + 0.75L + 0.75(0.6)W + 0.75(S or Lr or R)_Wind downforce Case A only	-1.6372	2.7230	0.0000	0.0000	-0.0000	16.8582
ULS: 6a. D + 0.75L + 0.75(0.6)W + 0.75(S or Lr or R)_Wind downforce Case B only	-1.6372	2.7230	0.0000	0.0000	-0.0000	16.8582
ULS: 6a. D + 0.75L + 0.75(0.6)W + 0.75(S or Lr or R)_Wind uplift Case A only	1.1844	-0.0985	-0.0000	0.0000	-0.0000	-11.2311
ULS: 6a. D + 0.75L + 0.75(0.6)W + 0.75(S or Lr or R)_Wind uplift Case B only	1.0450	0.0408	0.0000	0.0000	-0.0000	-12.0700
ULS: 7. 0.6D + 0.6W_Wind downforce Case A only	-2.1829	2.8344	0.0000	0.0000	-0.0000	22.4659
ULS: 7. 0.6D + 0.6W_Wind downforce Case B only	-2.1829	2.8344	0.0000	0.0000	-0.0000	22.4659
ULS: 7. 0.6D + 0.6W_Wind uplift Case A only	1.5791	-0.9276	-0.0000	0.0000	-0.0000	-14.9866
ULS: 7. 0.6D + 0.6W_Wind uplift Case B only	1.3934	-0.7419	0.0000	0.0000	-0.0000	-16.1052

Worst Case Reactions LRFD

These calculations are taken directly from the FEA via SkyCiv and are used in the Concrete Checks of the Foundatino Module.
Note: Worst case values are assumed as downforce wind load cases.

Result	Value
Axial	5.3710
Shear X	-3.6382
Shear Z	-0.0000
Moment X	0.0000
Moment Z	37.8604

Worst Case Reactions ASD

These results are taken from the worst case values in the above table and are used in the Soil Checks in the Foundation Module.
Note: Worst case values are assumed as downforce wind load cases.

Result	Value
Axial	3.3677
Shear X	-2.1829
Shear Z	-0.0000
Moment X	0.0000
Moment Z	22.4723

REFERENCES	CALCULATIONS	RESULTS

Wind Load Calculations based on ASCE 7-16

Design Information :

Project Name : MTSOLAR_26AJDGC372AD3
Client :
Designer : MT_SKYCIV AutoDesigner
Company : MT Solar
Units : Imperial
Notes : Snow loads based on monoslope structure

Project Data

The structure is located in **Arcata, CA, USA** categorized as **Exposure B** (assumed to be homogeneous for the selected wind direction). The wind load calculation for the structure - Main Wind Force Resisting System (MWFRS) - is based on the Directional Procedure (Chapter 27) of ASCE 7. Moreover, the structure is classified as **Risk Category I**. The location is elevated at **29.54 ft** above mean sea level.

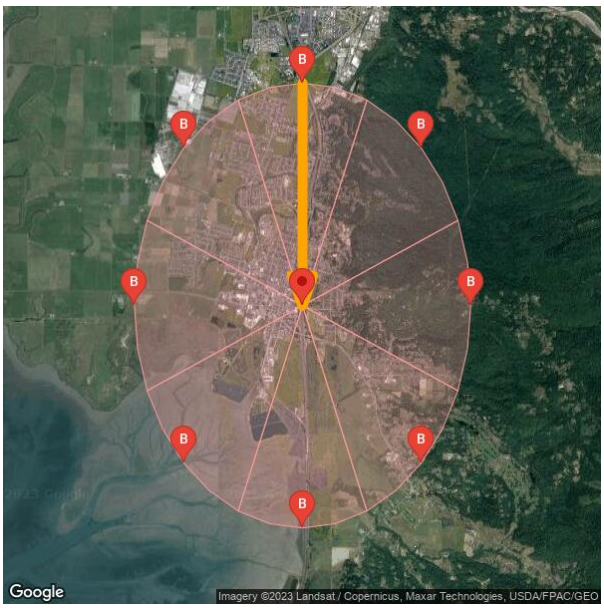

Figure 1. Site location.

Parameter	Value
Building Length, L	7.60 ft
Building Width, B	13.00 ft
Mean Roof Height, h	9.85 ft
Roof Profile	Open Monoslope
Roof Pitch Angle, θ	45.00°
Structure Type	Main Wind Force Resisting System (MWFRS)
Wind Blockage	Empty Under

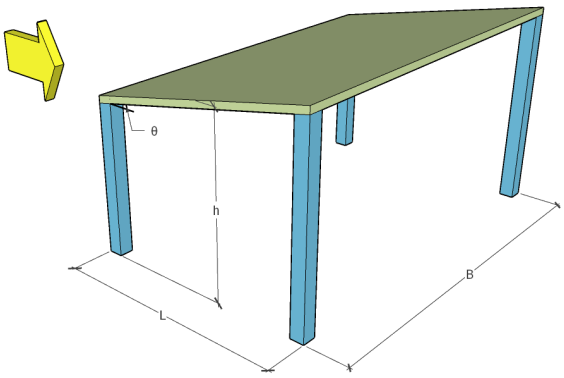

Figure 2. Building parameters.

Figure 26.5-1	**Basic Wind Speed,** V Wind speed for the address is **120 mph (defined by the user)** for Risk Category I and was calculated using Triangular Interpolation Network (TIN) method from points with known wind speed values based on Figure 26.5-1 of ASCE 7.	$V = 120$ mph **(defined by the user)**
Table 207A.6-1	**Wind Directionality Factor,** K_d $K_d = 0.85$ - Wind Directionality Factor *For buildings*	$K_d = 0.85$
Section 26.8.1	**Topographic Factor,** K_{zt} $K_{zt} = 1$ - Topographic Factor *For the selected wind source direction, either the terrain is relatively a flat surface or the structure is outside the local topographic zones.*	$K_{zt} = 1$

For calculating the hill-shape multiplier, the detected topography for the selected wind source direction is Flat.

Ground Elevation Factor, K_e

Section 26.9 K_e - Ground Elevation Factor

$$K_e = e^{-0.0000362\ E}$$

$$K_e = 0.99893$$

$$\text{Where } E = \text{Site Elevation} = 29.54 \text{ ft}$$

Section 26.9 $K_e = 0.99893$ - Ground Elevation Factor

$K_e = 0.99893$

Velocity Pressure Exposure Coefficient, K_z

Section 26.10 K_z - Velocity Pressure Exposure Coefficient

For $z < 15ft$

$$K_z = 2.01 \times (15/z_g)^{2/\alpha}$$

Section 26.10 K_z - Velocity Pressure Exposure Coefficient

For $15ft \leq z \leq z_g$

$$K_z = 2.01 \times (z/z_g)^{2/\alpha}$$

Level	Elevation (ft)	K_z
h	9.845	0.575

Velocity Pressure, q_h

For the selected wind source direction.

Section 26.10.2 q_h - Velocity Pressure at h

$$q_h = 0.00256\ K_{z,h}\ K_{zt}\ K_d\ K_e\ V^2$$

$$q_h = 17.989 \text{ psf}$$

$$\begin{aligned} \text{Where } K_{z,h} &= 0.57472 \\ K_{zt} &= \text{Topographic Factor} = 1 \\ K_d &= \text{Wind Directionality Factor} = 0.85 \\ V &= \text{Basic Wind Speed} = 120 \text{ mi/h} \\ K_e &= \text{Ground Elevation Factor} = 0.99893 \end{aligned}$$

Velocity Pressure for All Directions

Section 26.8 K_{zt} - Topographic Factor

$$K_{zt} = (1 + K_1 \times K_2 \times K_3)^2$$

Section 26.10 K_z - Velocity Pressure Exposure Coefficient

For $15ft \leq z \leq z_g$

$$K_z = 2.01 \times (z/z_g)^{2/\alpha}$$

Section 26.10 K_z - Velocity Pressure Exposure Coefficient

For $z < 15ft$

$$K_z = 2.01 \times (15/z_g)^{2/\alpha}$$

Direction	Exposure Category	K_z @ $h = 9.845ft$	K_{zt}	K_d	K_d	V (mph)	q_h (psf)
N	B	0.575	1.000	0.850	0.999	120.000	17.989
S	B	0.575	1.000	0.850	0.999	120.000	17.989
E	B	0.575	1.000	0.850	0.999	120.000	17.989
W	B	0.575	1.000	0.850	0.999	120.000	17.989
NE	B	0.575	1.000	0.850	0.999	120.000	17.989
SE	B	0.575	1.000	0.850	0.999	120.000	17.989
NW	B	0.575	1.000	0.850	0.999	120.000	17.989
SW	B	0.575	1.000	0.850	0.999	120.000	17.989

Net Pressure Coefficients, C_N

Figure 27.3-4 to 27.3-7 The net pressure coefficients, C_N, are calculated using Figures 27.3-4 to 27.3-7 of ASCE 7-16 - Clear Wind Flow - as shown in Table below.

Direction	Surface	C_N Case A	C_N Case B
0	Windward	-1.600	-2.300
	Leeward	-1.800	-0.700
180	Windward	2.200	2.600
	Leeward	2.500	1.400
90	≤ h from windward edge	-0.800	0.800
	h to 2h from windward edge	-0.600	0.500
	> 2h from windward edge	-0.300	0.300

Gust Effect Factor, G

Section 26.11 $G = 0.85$ - Gust Effect Factor

The structure is assumed to be rigid.

$G = 0.85$

Design Wind Pressures (MWFRS)

Section 27.3.2 p - Design Wind Pressure

For open buildings

$$p = q_h \times G \times C_N$$

For Wind Pressure - 0°

Direction	Surface	p Case A (psf)	p Case B (psf)
0	Windward	-24.465	-35.169
	Leeward	-27.524	-10.704
180	Windward	33.640	39.756
	Leeward	38.227	21.407

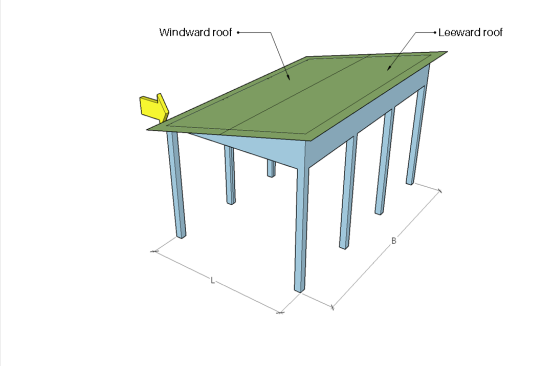

Wind along L - 0°

For Wind Pressure - 90°

Direction	Surface	p Case A (psf)	p Case B (psf)
90	≤ h from windward edge	-12.233	12.233
	h to 2h from windward edge	-9.175	7.645
	> 2h from windward edge	-4.587	4.587

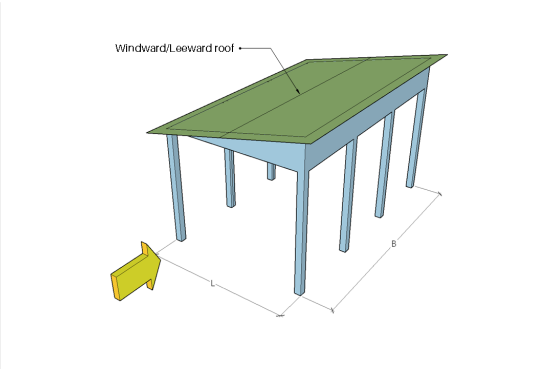

Wind along B - 90°

Section 27.3.2
Section 28.3.5

In addition to the roof pressures for 90°, an additional horizontal wind load on open building should be calculated for wind pressures parallel to the ri dge in accordance with Section 28.3.5. We will assume $K_S = 1.0$ and should be adjusted and be reduced based on the actual solidity ratio ϕ and nu mber of frames n - See Figure 28.3-2.

Section 27.3.2
Section 28.3.5

p - Horizontal Wind Loads on Open or Partially Enclosed Buildings

For wind pressure parallel to the ridge (90°)

$$p = q_h \times [(GC_{pf})_{windward} - (GC_{pf})_{leeward}] \times K_B \times K_S$$

Section 27.3.2
Section 28.3.5

K_B - Frame Width Factor

For $L < 100ft$, $K_B = 1.8 - 0.01L$. Otherwise, $K_B = 0.8$.

$$K_B = 1.8 - 0.01 * L \leq 0.8$$

$$K_B = 1.724$$

$$\text{Where } L = \text{Building Length} = 7.601 \text{ ft}$$

Section 28.3.5

K_S - Shielding Factor

$$K_S = 0.6 + 0.073 \times (n - 1) + \left(1.25 \times \phi^{1.8}\right)$$

Section 28.3.5

$K_S = 1$ - Shielding Factor

Assumed to be equal to 1.0 and should be adjusted based on the actual wall solidity ratio ϕ and number of frames n.

$K_S = 1$

Figure 28.3-1
Section 28.3.5

$(GC_{pf})_{windward} = 0.4$

Using Zone 5 from Figure 28.3-1

$(GC_{pf})_{windward} = 0.4$

Figure 28.3-1
Section 28.3.5

$(GC_{pf})_{leeward} = -0.29$

Using Zone 6 from Figure 28.3-1

$(GC_{pf})_{leeward} = -0.29$

Section 27.3.2
Section 28.3.5

p - Horizontal Wind Loads on Open or Partially Enclosed Buildings

For wind pressure parallel to the ridge (90°)

$$p = q_h \ [(GC_{pf})_{windward} - (GC_{pf})_{leeward}] \ K_B \ K_S$$

$$p = 21.399 \text{ psf}$$

REFERENCES	CALCULATIONS	RESULTS

Snow Load Detailed Calculations based on ASCE 7-16

Design Information :

Project Name : MTSOLAR_26AJDGC372AD3
Client :
Designer : MT_SKYCIV AutoDesigner
Company : MT Solar
Units : Imperial
Notes : Snow loads based on monoslope structure

Project Data

The structure is located in **Arcata, CA, USA** categorized as **Risk Category I**. The snow load calculation for the structure is b ased on the Snow Loads (Chapter 7) of ASCE 7. The location is elevated at **30 ft** above mean sea level.

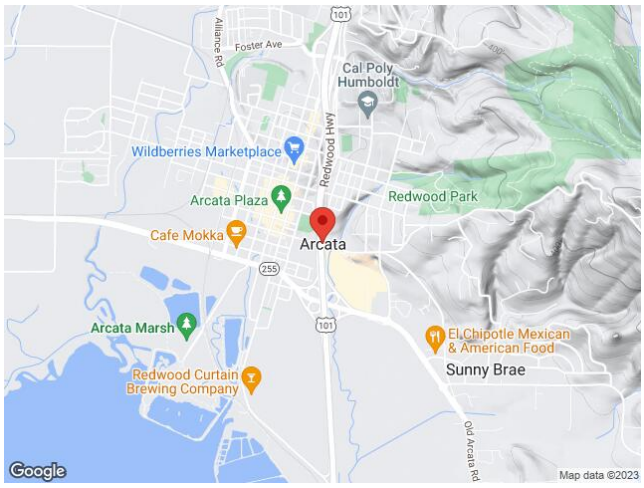

Figure 1. Site location.

Additional details of the structure are shown in Table below and illustrated in Figure 2:

Parameter	Value
Building Length, L	7.601 ft
Building Width, B	13.000 ft
Mean Roof Height, h	9.845 ft
Roof Profile	Open Monoslope
Roof Pitch Angle, θ	45.000°

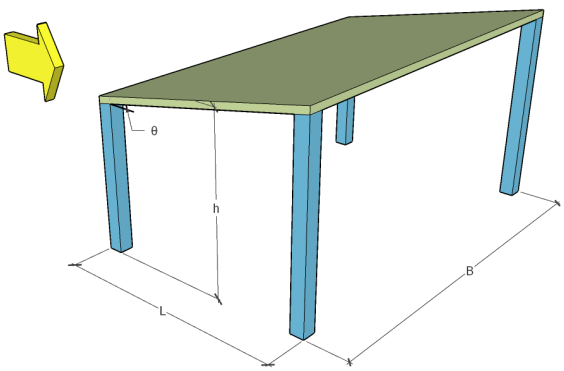

Figure 2. Building parameters.

Section 7.2 of ASCE 7

Ground Snow Load, p_g

The ground snow load, p_g, for the site location is **50 psf (defined by the user)** at elevation 29.54 ft above mean sea level b ased on Section 7.2 of ASCE 7.

$p_g = 50$ psf **(defined b y the user)**

Table 7-2 Section 7.3.1 of ASCE 7	**Exposure Factor, C_e** The exposure factor, C_e, for the structure is equal 0.90 as the terrain is categorized as **Exposure B** with exposure condition s pecified as **Fully Exposed** based on Table 7-2 Section 7.3.1 of ASCE 7.	$C_e = 0.90$
Table 7-3 Section 7.3.2 of ASCE 7	**Thermal Factor, C_e** Since the thermal condition of the structure is categorzied as **"Unheated and open air structures,"** the corresponding ther mal factor, C_t, is equal 1.20 based on Table 7-3 Section 7.3.2 of ASCE 7.	$C_t = 1.20$
Table 1.5-2 of Chapter 1 ASCE 7	**Importance Factor, I_s** Since the structure is classified Risk Category I, the Importance Factor, I_s, is equal to **0.8**.	$I_s = 0.80$
Equation 7.3-1 of Sectio n 7.3 ASCE 7	**Flat Roof Snow Load, p_f** The flat roof snow load, p_f, (psf) is calculated using the Equation 7.3-1: $$p_f = 0.7C_eC_tI_sp_g$$ $$p_f = 0.7(0.90)(1.20)(0.80)(50.00) = 30.24psf$$	$p_f = 30.24$ psf
Section 7.10 ASCE 7	**Rain-on-snow Surcharge Load, p_r** The rain-on-snow surcharge load, p_r, is equal to 0.00 psf since p_g > 20 psf.	$p_r = 0.00$ psf
Equation 7.7-1 of ASCE 7	**Snow Density, γ** The snow density, γ, is calculated using Equation 7.7-1 of ASCE 7 as: $$\gamma = 0.13p_g + 14 \leq 30 = 0.13(50.00) + 14 \leq 30$$ $$\gamma = 20.50pcf$$	$\gamma = 20.50pcf$
Section 7.4 ASCE 7	**Roof Slope Factor (Balanced), C_s** Since the roof is classified as cold roof ($C_t > 1.0$), the corresponding roof slope factor, C_s, is equal to 0.455 based on Figure 7.2c where $\theta = 45.00°$.	$C_s = 0.455$
Equation 7.4-1 of Sectio n 7.4 ASCE 7	**Sloped Roof Snow Load (Balanced), p_s** The sloped roof snow load, p_s, (psf) is calculated using the Equation 7.4-1: $$p_s = C_sp_f$$ $$p_s = (0.455)(30.24) = 13.75psf$$	$p_s = 13.75$ psf

Project Details

Design Code:	AISC 360-16 LRFD
Provision:	LRFD
Country:	United States
User Name:	sales@mtsolar.us
Unit System:	imperial

Design Input Information

Design Factors			
Φ_t	Φ_c	Φ_b	Φ_v
0.9	0.9	0.9	0.9

Design Materials			
ID	E (ksi)	F_y (ksi)	F_u (ksi)
1	29000	50	65

Section Dimensions

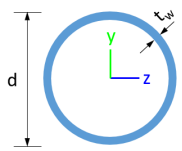

ID	Name	d (in)	t_w (in)					
2	2in Pipe Sch 80	2.38	0.22					
7	6in Pipe Sch 40	6.63	0.28					
28	2.5in Pipe Sch 80	2.88	0.28					

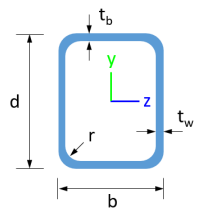

ID	Name	d (in)	b (in)	t_w (in)	t_b (in)	r (in)		
30	HSS3x2x3/16	3.00	2.00	0.17	0.17	0.17		

Section Properties

ID	Name	A (in^2)	J (in^4)	I_{yp} (in^4)	I_{zp} (in^4)	I_w (in^6)	S_{yp} (in^3)	S_{zp} (in^3)
2	2in Pipe Sch 80	1.48	1.74	0.87	0.87	0.00	1.02	1.02
7	6in Pipe Sch 40	5.58	56.28	28.14	28.14	0.00	11.28	11.28
28	2.5in Pipe Sch 80	2.25	3.85	1.92	1.92	0.00	1.87	1.87
30	HSS3x2x3/16	1.54	2.05	0.93	1.77	1.95	1.12	1.48

Member Properties

Member ID	Section ID	K_zL (ft)	K_yL (ft)	L_b (ft)	C_b	LST	LSC	LD
1	7	20.67	20.67	9.84	-	300	200	1
2	28	0.98	0.98	1.50	-	30	20	1

						0	0	
3	30	0.92	0.92	1.42	1.31,1.30,1.31,1.30,1.30,1.31,1.29,1.29,1.29,1.29,1.29,1.29,1.29,1.29,1.29,1.17,1.28,1.30,1.30,1.28,1.29,1.29,1.29,1.29,1.29	300	200	1
4	30	1.63	1.63	2.50	1.68,1.68,1.68,1.67,1.68,1.68,1.67,1.67,1.66,1.65,1.67,1.67,1.66,1.66,1.67,1.67,1.63,1.68,1.67,1.67,1.66,1.53,1.67,1.67,1.66,1.66	300	200	1
5	30	0.70	0.70	1.08	1.67,1.67,1.67,1.67,1.67,1.67,1.67,1.67,1.66,1.67,1.67,1.67,1.66,1.67,1.67,1.67,1.62,1.66,1.67,1.67,1.66,1.66,1.67,1.67,1.67,1.67	300	200	1
6	30	0.92	0.92	1.42	1.31,1.30,1.31,1.30,1.30,1.31,1.29,1.29,1.29,1.29,1.29,1.29,1.29,1.29,1.29,1.17,1.28,1.30,1.30,1.28,1.29,1.29,1.29,1.29,1.29	300	200	1
7	30	0.70	0.70	1.08	1.67,1.67,1.67,1.67,1.67,1.67,1.67,1.67,1.66,1.67,1.67,1.67,1.67,1.67,1.67,1.67,1.62,1.66,1.67,1.67,1.66,1.66,1.67,1.67,1.67,1.67	300	200	1
8	2	4.20	4.20	2.00	-	300	200	1
9	2	1.95	1.95	3.00	-	300	200	1
10	30	1.63	1.63	2.50	1.68,1.68,1.68,1.67,1.68,1.68,1.67,1.67,1.66,1.65,1.67,1.67,1.66,1.65,1.67,1.67,1.63,1.68,1.67,1.67,1.66,1.53,1.67,1.67,1.66,1.66	300	200	1
11	2	4.20	4.20	2.00	-	300	200	1
12	28	0.98	0.98	1.50	-	300	200	1
13	2	1.46	1.46	2.25	-	300	200	1
14	2	1.46	1.46	2.25	-	300	200	1
15	2	4.20	4.20	2.00	-	300	200	1
16	2	4.20	4.20	2.00	-	300	200	1
17	2	1.95	1.95	3.00	-	300	200	1
18	2	1.46	1.46	2.25	-	300	200	1
19	2	1.95	1.95	3.00	-	300	200	1
20	2	1.46	1.46	2.25	-	300	200	1

Member Design Capacity

Member ID	$\Phi_t P_n$ (kip)	$\Phi_c P_n$ (kip)	$\Phi_b M_{zn}$ (k-ft)	$\Phi_b M_{yn}$ (k-ft)	$\Phi_v V_{yn}$ (kip)	$\Phi_v V_{zn}$ (kip)
1	251.16	102.88	42.30	42.30	75.35	75.35
2	101.41	100.23	7.02	7.02	30.42	30.42
3	69.30	68.29	5.55	4.20	23.28	13.89
4	69.30	66.19	5.55	4.20	23.28	13.89
5	69.30	68.70	5.55	4.20	23.28	13.89
6	69.30	68.29	5.55	4.20	23.28	13.89
7	69.30	68.70	5.55	4.20	23.28	13.89
8	66.48	48.46	3.82	3.82	19.94	19.94
9	66.48	62.10	3.82	3.82	19.94	19.94
10	69.30	66.19	5.55	4.20	23.28	13.89
11	66.48	48.46	3.82	3.82	19.94	19.94

12	101.41	100.23	7.02	7.02	30.42	30.42
13	66.48	63.98	3.82	3.82	19.94	19.94
14	66.48	63.98	3.82	3.82	19.94	19.94
15	66.48	48.46	3.82	3.82	19.94	19.94
16	66.48	48.46	3.82	3.82	19.94	19.94
17	66.48	62.10	3.82	3.82	19.94	19.94
18	66.48	63.98	3.82	3.82	19.94	19.94
19	66.48	62.10	3.82	3.82	19.94	19.94
20	66.48	63.98	3.82	3.82	19.94	19.94

Design Ratio

Member ID	P	M_z	M_y	V_y	V_z	(P,M_z,M_y)	Worst LC	KL/r	δ	Status
1	0.052	0.895	0.000	0.048	0.000	0.921	#13	0.552	Not Required	Pass
2	0.002	0.534	0.438	0.085	0.060	0.972	#13	0.042	Not Required	Warn
3	0.006	0.737	0.044	0.070	0.008	0.767	#13	0.071	Not Required	Pass
4	0.006	0.660	0.107	0.063	0.023	0.709	#13	0.084	Not Required	Pass
5	0.006	0.318	0.117	0.070	0.037	0.329	#13	0.054	Not Required	Pass
6	0.006	0.737	0.044	0.070	0.008	0.767	#13	0.071	Not Required	Pass
7	0.006	0.318	0.117	0.070	0.037	0.329	#13	0.054	Not Required	Pass
8	0.000	0.132	0.038	0.025	0.007	0.155	#13	Not Required	Not Required	Pass
9	0.006	0.172	0.180	0.001	0.000	0.354	#13	0.153	Not Required	Pass
10	0.006	0.660	0.107	0.063	0.023	0.709	#13	0.084	Not Required	Pass
11	0.000	0.147	0.038	0.028	0.007	0.170	#13	Not Required	Not Required	Pass
12	0.002	0.534	0.438	0.085	0.060	0.972	#13	0.042	Not Required	Warn
13	0.000	0.665	0.171	0.060	0.015	0.767	#13	Not Required	Not Required	Pass
14	0.000	0.597	0.171	0.054	0.015	0.699	#13	Not Required	Not Required	Pass
15	0.000	0.147	0.038	0.028	0.007	0.170	#13	Not Required	Not Required	Pass
16	0.000	0.132	0.038	0.025	0.007	0.155	#13	Not Required	Not Required	Pass
17	0.008	0.462	0.042	0.021	0.005	0.489	#13	0.102	Not Required	Pass
18	0.000	0.665	0.171	0.060	0.015	0.767	#13	Not Required	Not Required	Pass
19	0.005	0.507	0.053	0.019	0.005	0.540	#13	0.153	Not Required	Pass
20	0.000	0.597	0.171	0.054	0.015	0.699	#13	Not Required	Not Required	Pass

Definitions

Φ_t	Safety factor for tensile
Φ_c	Safety factor for compression
Φ_b	Safety factor for flexure
Φ_v	Safety factor for shear
E	Modulus of elasticity
F_y	Specified minimum yield stress
F_u	Specified minimum tensile strength
A	Cross-sectional area
J	Torsional constant
I_{yp}	Moment of inertia about the Y axes
I_{zp}	Moment of inertia about the Z axes
I_w	Warping constant
S_{yp}	Plastic section modulus about the Y axis
S_{zp}	Plastic section modulus about the Z axis
KL	Effective length
C_b	Buckling modification factor (from all load combinations)
L_b	Length between braced points
LST	Limited slenderness for tension
LSC	Limited slenderness for compression
LD	Limited deflection
P_n	Nominal axial strength (tension/comression)
M_n	Nominal flexural strength (about Z/Y axis)
V_n	Nominal shear strength (along Z/Y axis)
P	Design ratio in case of axial force

P	Design ratio in case of axial force
M_z	Design ratio in case of bending about Z axis
M_y	Design ratio in case of bending about Y axis
V_y	Design ratio in case of shear along Y axis
V_z	Design ratio in case of shear along Z axis
(P,M_z,M_y)	Design ratio in case of axial force and bending action
KL/r	Design ratio in case of section slenderness
δ	Design ratio in case of member deflection
OK	Capacity is provided
NG	Capacity is not provided

REFERENCES	CALCULATIONS	RESULTS

SkyCiv Foundation Design

Pile Foundation

Design Information :

Design code : IBC 2021 (International Building Code)
Unit System : Imperial

Pile Input

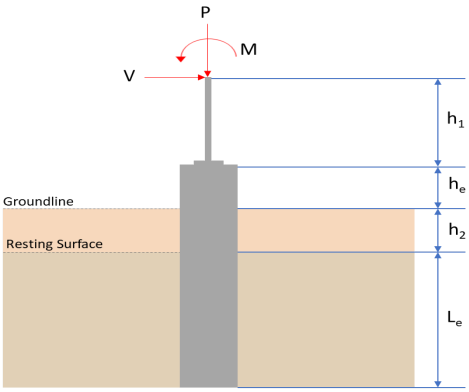

Geometry

Pile shape: round
$D = 36\ \text{in}$ - Pile diameter
$L = 8.5\ \text{ft}$ - Total pile length
$h_1 = 0\ \text{ft}$ - Lateral load height from the top of the pile,
$h_2 = 0\ \text{ft}$ - Depth to resisting surface
$h_e = 0\ \text{ft}$ - Length of pile above the ground

Tabulation of Soil Parameters

Layer	Label	Allowable Bearing Pressure (q_a) (psf)	Allowable Lateral Pressure (R) (psf/ft)
1	Sand, silty sand, clayey sand, silty gravel & clayey gravel	2000.000	150.000

Tabulation of Loads

Load Component	ASD	LRFD
P (kip)	3.368	5.371
V_x (kip)	-2.183	-3.638
V_z (kip)	0.000	0.000
M_x (kipft)	0.000	0.000
M_z (kipft)	22.472	37.860

Material Properties

$f'_{ck} = 3\ \text{ksi}$ - Concrete strength,

Required depth to resist lateral loads (ASD)

H - Point of application of the lateral load

$$H = h_1 + h_2 + h_e$$

$$H = (0\ \text{ft}) + (0\ \text{ft}) + (0\ \text{ft})$$

$$H = 0\ \text{ft}$$

Considering x-direction:

H_o - Lateral force per length of pile,

$$H_o = \frac{V_x}{D}$$

$$H_o = \frac{(-2.183\ \text{kip})}{(36\ \text{in})}$$

$$H_o = -0.72767\ \text{kip/ft}$$

M_o - Moment per length of pile,

$$M_o = \frac{M_z + (V_x\ H)}{D}$$

$$M_o = \frac{(22.472\ \text{kipft}) + ((-2.183\ \text{kip}) \times (0\ \text{ft}))}{(36\ \text{in})}$$

$$M_o = 7.4907\ \text{kipft/ft}$$

Required depth of embedment in earth:

$$L_x^3 - \left(14.14 \times \frac{H_o \times L_x}{R}\right) - \left(18.85 \times \frac{M_o}{R}\right) = 0$$

Solving the cubic equation:
$L_{e,x} = 7.521\ \text{ft}$ - Required depth in x-direction,

Considering z-direction:

$L_{e,z} = 0\ \text{ft}$ - Required depth in z-direction,

Minimum embedded depth required:

$L_{e,req}$ - Depth of pile required,

$$L_{e,req} = MAX[L_{e,x}, L_{e,z}]$$

$$L_{e,req} = MAX[(7.521\ \text{ft}), (0\ \text{ft})]$$

$$L_{e,req} = 7.521\ \text{ft}$$

L_e - Actual embedded length of pile,

$$L_e = L - h_e - h_2$$

$$L_e = (8.5\ \text{ft}) - (0\ \text{ft}) - (0\ \text{ft})$$

$$L_e = 8.5\ \text{ft}$$

$Ratio$ - Embedded depth

$$Ratio = \frac{L_{e,req}}{L_e}$$

$$Ratio = \frac{(7.521\ \text{ft})}{(8.5\ \text{ft})}$$

$$Ratio = 0.88482$$

Status: **PASS**
Ratio: **0.880**

End-bearing Capacity (ASD)

A - Pile cros-section area

$$A = \pi \left(\frac{D}{2}\right)^2$$

$$A = \pi \times \left(\frac{(36\ \text{in})}{2}\right)^2$$

$$A = 7.0686\ \text{ft}^2$$

q - End-bearing pressure

$$q = \frac{P_v}{A}$$

$$q = \frac{(3.368\ \text{kip})}{(7.0686\ \text{ft}^2)}$$

$$q = 0.47647\ \text{kip/ft}^2$$

Check bearing capacity ratio:

$Ratio$ - Capacity

$$Ratio = \frac{q}{q_a}$$

$$Ratio = \frac{(0.47647\ \text{kip/ft}^2)}{(2000\ \text{psf})}$$

$$Ratio = 0.23824$$

Status: **PASS**
Ratio: **0.240**

Czerniak

Lateral Soil Pressure (ASD):

L/D - Length to least lateral dimension ratio,

$$L/D = \frac{L}{D}$$

$$L/D = \frac{(8.5\ \text{ft})}{(36\ \text{in})}$$

$$L/D = 2.8333$$

Since L/D $\leq$ 10,

Pile is short.

Considering x-direction:

$H_o = -0.72767\ \text{kip/ft}$ - Lateral force per length of pile,
$M_o = 7.4907\ \text{kipft/ft}$ - Overturning moment per length of pile,
a - Distance from resting surface to pivot point,

$$a = \frac{(4\ M_o\ L_e) + \left(3\ H_o\ L_e^2\right)}{(6\ M_o) + (4\ H_o\ L_e)}$$

$$a = \frac{(4 \times (7.4907\ \text{kipft/ft}) \times (8.5\ \text{ft})) + \left(3 \times (-0.72767\ \text{kip/ft}) \times (8.5\ \text{ft})^2\right)}{(6 \times (7.4907\ \text{kipft/ft})) + (4 \times (-0.72767\ \text{kip/ft}) \times (8.5\ \text{ft}))}$$

$$a = 5.9182\ \text{ft}$$

p - Earth pressure against the pile at distance a/2 from resting surface,

$$p = \frac{1.178\ [(4\ M_o) + (3\ H_o\ L_e)]^2}{L_e^2\ [(3\ M_o) + (2\ H_o\ L_e)]}$$

$$p = \frac{1.178 \times [(4 \times (7.4907\ \text{kipft/ft})) + (3 \times (-0.72767\ \text{kip/ft}) \times (8.5\ \text{ft}))]^{\ 2}}{(8.5\ \text{ft})^2 \times [(3 \times (7.4907\ \text{kipft/ft})) + (2 \times (-0.72767\ \text{kip/ft}) \times (8.5\ \text{ft}))]}$$

$$p = 0.21002\ \text{kip/ft}^2$$

s - Earth pressure against the pile at distance L_e,

$$s = \frac{9.425\ [(2\ M_o) + (H_o\ L_e)]}{L_e^2}$$

$$s = \frac{9.425 \times [(2 \times (7.4907\ \text{kipft/ft})) + ((-0.72767\ \text{kip/ft}) \times (8.5\ \text{ft}))]}{(8.5\ \text{ft})^2}$$

$$s = 1.1475\ \text{kip/ft}^2$$

Check lateral soil pressure capacity:

p_a - Allowable lateral soil pressure at depth a/2,

$$p_a = R\ \frac{a}{2}$$

$$p_a = (150\ \text{psf/ft}) \times \frac{(5.9182\ \text{ft})}{2}$$

$$p_a = 0.44386\ \text{kip/ft}^2$$

$Ratio$ - Lateral soil capacity

$$Ratio = \frac{p}{p_a}$$

$$Ratio = \frac{\left(0.21002\ \text{kip/ft}^2\right)}{\left(0.44386\ \text{kip/ft}^2\right)}$$

$$Ratio = 0.47318$$

Status: **PASS**
Ratio: **0.470**

p_s - Allowable lateral soil pressure at depth L_e,

$$p_s = R\ L_e$$

$$p_s = (150\ \text{psf/ft}) \times (8.5\ \text{ft})$$

$$p_s = 1.275\ \text{kip/ft}^2$$

$Ratio$ - Lateral soil capacity

$$Ratio = \frac{s}{p_s}$$

$$Ratio = \frac{\left(1.1475\ \text{kip/ft}^2\right)}{\left(1.275\ \text{kip/ft}^2\right)}$$

$$Ratio = 0.89997$$

Status: **PASS**
Ratio: **0.900**

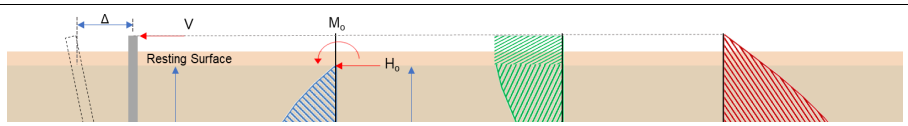

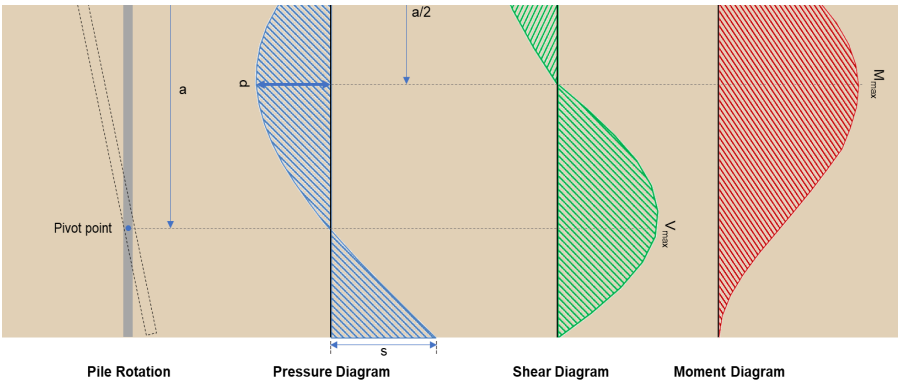

Shear force and Bending moment (x-direction, LRFD)

H_o - Lateral force per length of pile,

$$H_o = \frac{V_x}{D}$$

$$H_o = \frac{(-3.638\ \text{kip})}{(36\ \text{in})}$$

$$H_o = -1.2127\ \text{kip/ft}$$

M_o - Moment per length of pile,

$$M_o = \frac{M_z + (V_x\ H)}{D}$$

$$M_o = \frac{(37.86\ \text{kipft}) + ((-3.638\ \text{kip}) \times (0\ \text{ft}))}{(36\ \text{in})}$$

$$M_o = 12.62\ \text{kipft/ft}$$

E - Distance from lateral load to resisting surface,

$$E = \frac{M_o}{H_o}$$

$$E = \frac{(12.62\ \text{kipft/ft})}{(-1.2127\ \text{kip/ft})}$$

$$E = 10.407\ \text{ft}$$

a - Distance from resting surface to pivot point,

$$a = \frac{(4\ M_o\ L_e) + \left(3\ H_o\ L_e^2\right)}{(6\ M_o) + (4\ H_o\ L_e)}$$

$$a = \frac{(4 \times (12.62\ \text{kipft/ft}) \times (8.5\ \text{ft})) + \left(3 \times (-1.2127\ \text{kip/ft}) \times (8.5\ \text{ft})^2\right)}{(6 \times (12.62\ \text{kipft/ft})) + (4 \times (-1.2127\ \text{kip/ft}) \times (8.5\ \text{ft}))}$$

$$a = 5.9164\ \text{ft}$$

V_{max} - Max shear force located at depth a,

$$V_{max} = (H_o\ D) \left[1 - \left[3 \left(\frac{4\ E}{L_e} + 3\right) \left(\frac{a}{L_e}\right)^2\right] + \left[4 \left(\frac{3\ E}{L_e} + 2\right) \left(\frac{a}{L_e}\right)^3\right]\right]$$

$$V_{max} = ((-1.2127\ \text{kip/ft}) \times (36\ \text{in})) \times \left[1 - \left[3 \times \left(\frac{4 \times (10.407\ \text{ft})}{(8.5\ \text{ft})} + 3\right) \times \left(\frac{(5.9164\ \text{ft})}{(8.5\ \text{ft})}\right)^2\right] + \left[4 \times \left(\frac{3 \times (10.407\ \text{ft})}{(8.5\ \text{ft})} + 2\right) \times \left(\frac{(5.9164\ \text{ft})}{(8.5\ \text{ft})}\right)^3\right]\right]$$

$$V_{max} = 10.281\ \text{kip}$$

M_{max} - Max bending moment located at depth a/2,

$$M_{max} = (H_o\ D\ L_e) \left[\left(\frac{E}{L_e} + \frac{a}{2\ L_e}\right) - \left[\left(\frac{4\ E}{L_e} + 3\right) \left(\frac{a}{2\ L_e}\right)^3\right] + \left[\left(\frac{3\ E}{L_e} + 2\right) \left(\frac{a}{2\ L_e}\right)^4\right]\right]$$

$$M_{max} = ((-1.2127\ \text{kip/ft}) \times (36\ \text{in}) \times (8.5\ \text{ft})) \times \left[\left(\frac{(10.407\ \text{ft})}{(8.5\ \text{ft})} + \frac{(5.9164\ \text{ft})}{2 \times (8.5\ \text{ft})}\right) - \left[\left(\frac{4 \times (10.407\ \text{ft})}{(8.5\ \text{ft})} + 3\right) \times \left(\frac{(5.9164\ \text{ft})}{2 \times (8.5\ \text{ft})}\right)^3\right] + \left[\left(\frac{3 \times (10.407\ \text{ft})}{(8.5\ \text{ft})} + 2\right) \times \left(\frac{(5.9164\ \text{ft})}{2 \times (8.5\ \text{ft})}\right)^4\right]\right]$$

$$M_{max} = 40.901 \text{ kipft}$$

Minimum Reinforcement Check (LRFD)

Parameters:

$f'_{ck} = 3 \text{ ksi}$ - Concrete strength,
$f_{yk} = 60 \text{ ksi}$ - Longitudinal reinforcement strength,
$\phi = 0.65$ - Reduction factor for axial strength,
Table 22.4.2.1 $\alpha = 0.85$ - Alpha factor for axial strength,
$A_g = 1017.9 \text{ in}^2$ - Gross area of concrete,

Longitudinal reinforcement:

Required reinforcement due to axial load, $A_{st,required}$
22.4.2.2, 10.6.1.1 $A_{st,required}$

$$A_{st,required} = Min\left[\frac{\frac{P}{\phi\,\alpha} - \left(0.85\,f'_{ck}\,A_g\right)}{f_{yk} - \left(0.85\,f'_{ck}\right)}, \left(0.08\,A_g\right)\right]$$

$$A_{st,required} = Min\left[\frac{\frac{(5.371 \text{ kip})}{(0.65)\times(0.85)} - \left(0.85 \times (3 \text{ ksi}) \times \left(1017.9 \text{ in}^2\right)\right)}{(60 \text{ ksi}) - (0.85 \times (3 \text{ ksi}))}, \left(0.08 \times \left(1017.9 \text{ in}^2\right)\right)\right]$$

$$A_{st,required} = -45.011 \text{ in}^2$$

A_{min} - Governing minimum reinforcement area,

$$A_{min} = Max\left[A_{st,required}, \left(0.0018\,A_g\right)\right]$$

$$A_{min} = Max\left[\left(-45.011 \text{ in}^2\right), \left(0.0018 \times \left(1017.9 \text{ in}^2\right)\right)\right]$$

$$A_{min} = 1.8322 \text{ in}^2$$

n_{rebar} - Required number of reinforcement,

$$n_{rebar} = \frac{A_{min}}{A_{rebar}}$$

$$n_{rebar} = \frac{\left(1.8322 \text{ in}^2\right)}{\left(0.3068 \text{ in}^2\right)}$$

$$n_{rebar} = 6$$

A_{st} - Actual total reinforcement area,

$$A_{st} = n_{rebar}\,\frac{\pi\,d_{bar}^2}{4}$$

$$A_{st} = (6) \times \frac{\pi \times (0.625 \text{ in})^2}{4}$$

$$A_{st} = 1.8408 \text{ in}^2$$

$Ratio$ - Capacity

$$Ratio = \frac{A_{min}}{A_{st}}$$

$$Ratio = \frac{\left(1.8322 \text{ in}^2\right)}{\left(1.8408 \text{ in}^2\right)}$$

$$Ratio = 0.99533$$

Status: **PASS**
Ratio: **1.000**

25.2.3 s_{rebar} - Minimum spacing of reinforcement,

$$s_{rebar} = Max\left[1.5, \left(1.5\,d_{bar}\right)\right]$$

$$s_{rebar} = Max\left[1.5, (1.5 \times (0.625 \text{ in}))\right]$$

$$s_{rebar} = 1.5 \text{ in}$$

Ties:

25.7.2.2 Since longitudinal reinforcement is $\leq$ No. 10ø: Use #3(0.375 in)
25.7.2.1 s_{ties} - Maximum center-to-center spacing of ties,

$$s_{ties} = Min\left[\left(16\,d_{bar}\right), \left(48\,d_{ties}\right), D\right]$$

$$s_{ties} = Min\left[(16 \times (0.625 \text{ in})), (48 \times (0.375 \text{ in})), (36 \text{ in})\right]$$

$$s_{ties} = 10 \text{ in}$$

Summary:

Main reinforcement: **6 - #5 (0.625 in)**
Ties: **#3(0.375 in) - 10 in**

Axial Compression Strength (ACI 318-19, LRFD)

22.4.2.2 ϕP_N - Allowable axial compressive strength

$$\phi P_N = \phi\, 0.85\, \left[\left(0.85\, f'_{ck}\, \left[A_g - A_{st}\right]\right) + \left(f_{yk}\, A_{st}\right)\right]$$

$$\phi P_N = (0.65) \times 0.85 \times \left[\left(0.85 \times (3\text{ ksi}) \times \left[\left(1017.9\text{ in}^2\right) - \left(1.8408\text{ in}^2\right)\right]\right) + \left((60\text{ ksi}) \times \left(1.8408\text{ in}^2\right)\right)\right]$$

$$\phi P_N = 1492.5\text{ kip}$$

$Ratio$ - Capacity

$$Ratio = \frac{P}{\phi P_N}$$

$$Ratio = \frac{(5.371\text{ kip})}{(1492.5\text{ kip})}$$

$$Ratio = 0.0035987$$

Status: **PASS**
Ratio: **0.000**

Shear Strength (ACI 318-19, LRFD)

Parameters:

$b_w = 36\text{ in}$ - Effective width,
22.5.2.2 d - Effective depth

$$d = 0.80\, D$$

$$d = 0.80 \times (36\text{ in})$$

$$d = 28.8\text{ in}$$

22.5.5.1.3 λ_s - size effect modification factor

$$\lambda_s = MIN\left[\sqrt{\frac{2}{1 + \frac{d}{10}}}, 1\right]$$

$$\lambda_s = MIN\left[\sqrt{\frac{2}{1 + \frac{(28.8\text{ in})}{10}}}, 1\right]$$

$$\lambda_s = 0.71796$$

The following variables were converted to be consistent with empirical formula $f'_{ck} = 3\text{ ksi} \rightarrow 3000\text{ psi}$,
22.5.5.1.1 $V_{c,max}$ - Max shear strength of concrete

$$V_{c,max} = 5\, \lambda_s\, \sqrt{f'_{ck}}\, b_w\, d$$

$$V_{c,max} = 5 \times (0.71796) \times \sqrt{(3000\text{ psi})} \times (36\text{ in}) \times (28.8\text{ in})$$

$$V_{c,max} = 203.86\text{ kip}$$

The following variables were converted to be consistent with empirical formula $f'_{ck} = 3\text{ ksi} \rightarrow 3000\text{ psi}$, $P = 5.371\text{ kip} \rightarrow 5371\text{ lbf}$,
22.5.5.1.1(a) $V_{c,a}$ - Shear strength of concrete (a)

$$V_{c,a} = \left[2\, \lambda_s\, \sqrt{f'_{ck}} + \frac{P}{6\, A_g}\right]\, b_w\, d$$

$$V_{c,a} = \left[2 \times (0.71796) \times \sqrt{(3000\text{ psi})} + \frac{(5371\text{ lbf})}{6 \times (1017.9\text{ in}^2)}\right] \times (36\text{ in}) \times (28.8\text{ in})$$

$$V_{c,a} = 82.454\text{ kip}$$

The following variables were converted to be consistent with empirical formula $f'_{ck} = 3\text{ ksi} \rightarrow 3000\text{ psi}$,
22.5.5.1.2 $V_{c,b}$ - Shear strength of concrete (b)

$$V_{c,b} = \left[2\, \lambda_s\, \sqrt{f'_{ck}} + \left(0.05\, f'_{ck}\right)\right]\, b_w\, d$$

$$V_{c,b} = \left[2 \times (0.71796) \times \sqrt{(3000\text{ psi})} + (0.05 \times (3000\text{ psi}))\right] \times (36\text{ in}) \times (28.8\text{ in})$$

$$V_{c,b} = 237.06\text{ kip}$$

V_c - Governing shear strength of concrete

$$V_c = Min\left[V_{c,max}, V_{c,a}, V_{c,b}\right]$$

$$V_c = Min\left[(203.86\text{ kip}), (82.454\text{ kip}), (237.06\text{ kip})\right]$$

$$V_c = 82.454 \text{ kip}$$

The following variables were converted to be consistent with empirical formula $f'_{ck} = 3 \text{ ksi} \rightarrow 3000 \text{ psi}$,

22.5.1.2 $V_{s,a}$ - Shear strength of steel (a)

$$V_{s,a} = 8 \sqrt{f'_{ck}}\, b_w\, d$$

$$V_{s,a} = 8 \times \sqrt{(3000 \text{ psi})} \times (36 \text{ in}) \times (28.8 \text{ in})$$

$$V_{s,a} = 454.3 \text{ kip}$$

A_v - Ties rebar area,

$$A_v = \frac{\pi\, d_{ties}^2}{4}$$

$$A_v = \frac{\pi \times (0.375 \text{ in})^2}{4}$$

$$A_v = 0.11045 \text{ in}^2$$

22.5.8.5.3 $V_{s,b}$ - Shear strength of steel (b)

$$V_{s,b} = \frac{2\, A_v\, f_{ywk}\, d}{s_{ties}}$$

$$V_{s,b} = \frac{2 \times \left(0.11045 \text{ in}^2\right) \times (60 \text{ ksi}) \times (28.8 \text{ in})}{(10 \text{ in})}$$

$$V_{s,b} = 38.17 \text{ kip}$$

V_s - Governing shear strength of steel

$$V_s = MIN\left[V_{s,a}, V_{s,b}\right]$$

$$V_s = MIN\left[(454.3 \text{ kip}), (38.17 \text{ kip})\right]$$

$$V_s = 38.17 \text{ kip}$$

22.5.1.1 ϕV_n - Allowable shear strength

$$\phi V_n = \phi\, (V_c + V_s)$$

$$\phi V_n = (0.65) \times ((82.454 \text{ kip}) + (38.17 \text{ kip}))$$

$$\phi V_n = 78.406 \text{ kip}$$

Considering x-direction:

$V_{max} = 10.281 \text{ kip}$ - Maximum shear force in the x-direction,
$Ratio$ - Capacity

$$Ratio = \frac{V_{max}}{\phi V_n}$$

$$Ratio = \frac{(10.281 \text{ kip})}{(78.406 \text{ kip})}$$

$$Ratio = 0.13113$$

Status: **PASS**
Ratio: **0.130**

Flexural Strength (ACI 318-19, LRFD)

S_m - Section modulus

$$S_m = \frac{\pi\, D^3}{32}$$

$$S_m = \frac{\pi \times (36 \text{ in})^3}{32}$$

$$S_m = 4580.4 \text{ in}^3$$

$\lambda = 1$ - Concrete modification factor (Normal concrete),
Allowable flexural strength:
M_n shall be the lesser of:
$\phi M_{n,1}$

$$\phi M_{n,1} = \phi \times 5 \times \lambda \times \sqrt{(f'_c)} \times S_m$$

$$\phi M_{n,1} = 0.65 \times 5 \times 1 \times \sqrt{(3ksi)} \times 4580.442in^3$$

$$\phi M_{n,1} = 67.947kipft$$

14.5.2.1b $\phi M_{n,2}$

$$\phi M_{n,2} = \phi\, 0.85\, f'_{ck}\, S_m$$

$$\phi M_{n,2} = (0.65) \times 0.85 \times (3\ \text{ksi}) \times \left(4580.4\ \text{in}^3\right)$$

$$\phi M_{n,2} = 632.67\ \text{kipft}$$

Therefore,
ϕM_n - Allowable flexural strength,

$$\phi M_n = MIN[\phi M_{n,1}, \phi M_{n,2}]$$

$$\phi M_n = MIN[(67.947\ \text{kipft}), (632.67\ \text{kipft})]$$

$$\phi M_n = 67.947\ \text{kipft}$$

Considering x-direction:

$M_{max} = 40.901\ \text{kipft}$ - Maximum moment in the x-direction,
$Ratio$ - Capacity

$$Ratio = \frac{M_{max}}{\phi M_n}$$

$$Ratio = \frac{(40.901\ \text{kipft})}{(67.947\ \text{kipft})}$$

$$Ratio = 0.60196$$

Status: **PASS**
Ratio: **0.600**

THIS CONFIGURATION SATISFIES THE REQUIREMENTS SET FORTH IN THE:
- 2018 INTERNATIONAL BUILDING CODE
- 15TH ED. AISC STEEL DESIGN MANUAL

MATERIALS:
GR 5 BOLTS USED AT ALL CONNECTION LOCATIONS U.N.O
STEEL MATERIALS CONFORM TO THE FOLLOWING
- STEEL PIPE: ASTM A53, GR B, Fy=35 KSI
- WIDE FLANGE SECTIONS: ASTM A992, Fy=50 KSI
- RECTANGULAR HSS SECTIONS: ASTM A500, GR C, Fy=50 KSI
- PLATES: ASTM A36 Fy=36 KSI

CONCRETE WORK TO BE IN ACCORDANCE WITH ACI 318-14
- CONCRETE SHALL HAVE A MINIMUM COMPRESSIVE STRENGTH OF (F'c) of 3000 PSTHIS CONFIGURATION SATISFIES THE

REQUIREMENTS SET FORTH IN THE:
- 2018 INTERNATIONAL BUILDING CODE
- 15TH ED. AISC STEEL DESIGN MANUAL

MATERIALS:
GR 5 BOLTS USED AT ALL CONNECTION LOCATIONS U.N.O
STEEL MATERIALS CONFORM TO THE FOLLOWING
- STEEL PIPE: ASTM A53, GR B, Fy=35 KSI
- WIDE FLANGE SECTIONS: ASTM A992, Fy=50 KSI
- RECTANGULAR HSS SECTIONS: ASTM A500, GR C, Fy=50 KSI
- PLATES: ASTM A36 Fy=36 KSI

CONCRETE WORK TO BE IN ACCORDANCE WITH ACI 318-14
- CONCRETE SHALL HAVE A MINIMUM COMPRESSIVE STRENGTH OF (F'c) of 3000 PS

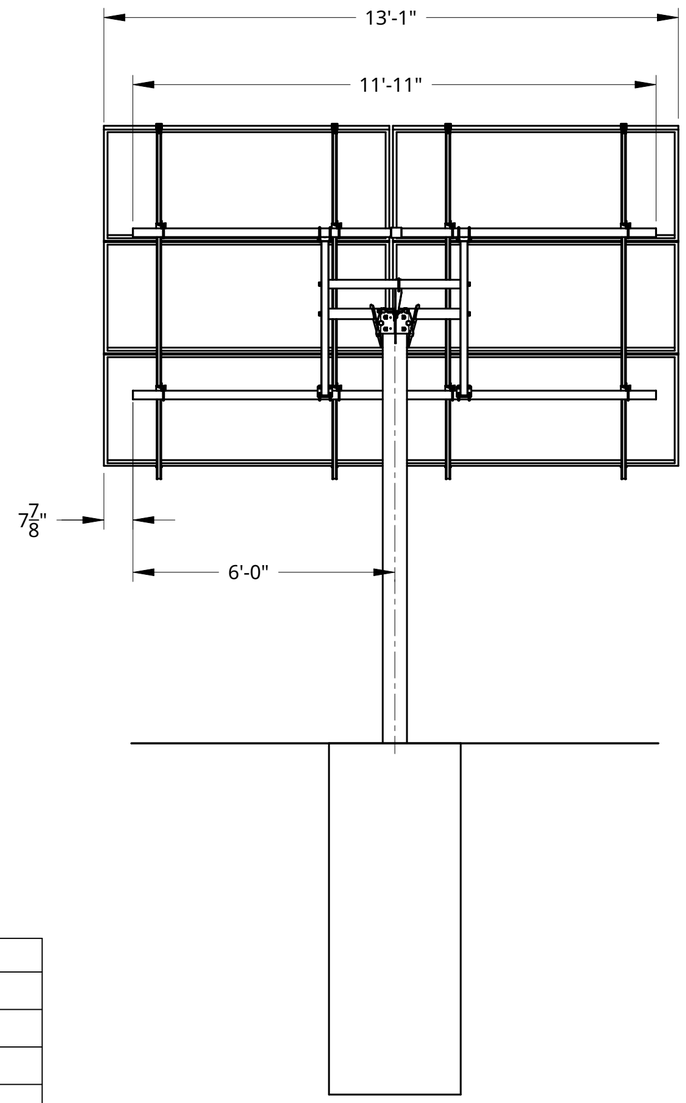

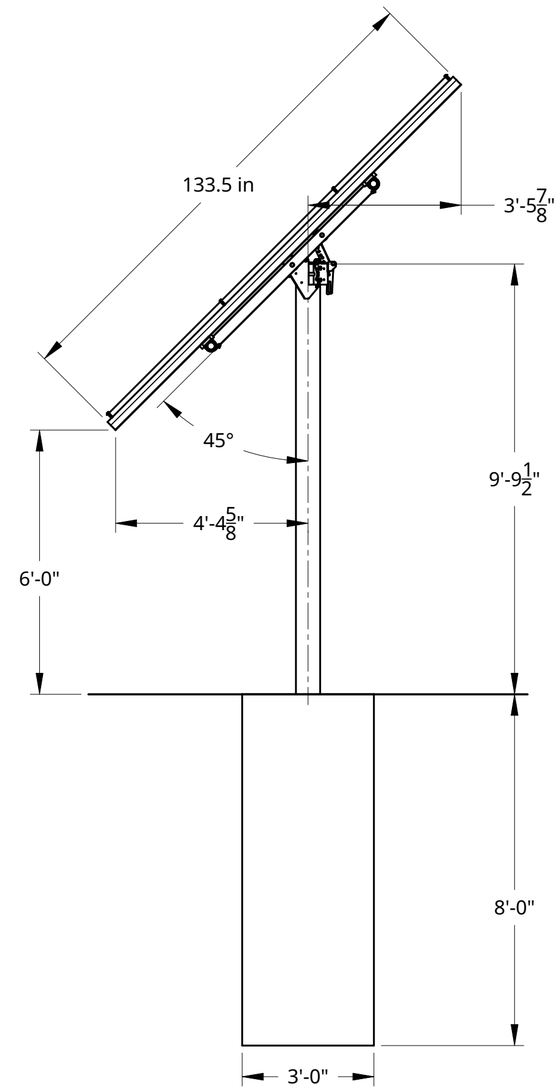

Item	Quantity	Name
1	1	CB-POLECAP-6
2	1	CYBER-BACKPLATE-6
3	1	CB-LID-6
4	2	BOLT-KIT-CYBER-6
5	1	CYBER-ADJUSTER
6	9	CB-2-U-BOLT
7	2	TUBE-3x2-60IN-HD
8	1	PIPE-2IN-36IN-HD
9	1	PIPE-2.5IN-36IN-HD
10	4	PIPE-KIT-5FT-HD
11	1	BOLT-KIT-CB-FRAME
12	1	POLE (NOT INCLUDED)
13	4	3.1 Rail Configurable
14	16	Tamarack Module Clamp Assembly
15	8	Tamarack Rail Adapter Kit
16	8	FM-1040M Tamarack Pipe Mount 2IN
17	1	groundplane
18	1	PALLET-PACKAGING-MATERIALS

LICENSED PROFESSIONAL ENGINEER
ROBERT SMYTHE
C 56136
EXP. 12/31/24
CIVIL
STATE OF CALIFORNIA
02/16/2023

DESIGN CRITERIA
MODULE QTY: 6
MODULE DIMENSIONS: 43" X 78"
WIND SPEED: 120 MPH, EXPOSURE B
GROUND SNOW: 50 PSF
SOIL: 4 - NON-COHESIVE, SAND

TAMARACK SOLAR | TE-101

TTP-6 -HW

MTSOLAR MADE IN THE USA

288 F St Arcata
CA 95521

REV

SHEET 1 of 1 | PV1 | DATE 02/15/2023