Starling Madison Lofquist, Inc.
Consulting Structural and Forensic Engineers
3600 E University Dr, Suite 1400, Phoenix, AZ 85034
tel: (602) 438-2500 fax: (602) 438-2505 www.smleng.com

Tamarack Solar
288 F Street
Arcata, CA 95521

January 10, 2024

Attn: Mr. David Katz

Subject: Tamarack 2.3 Rail - Roof Flush Mount System
Structural Analysis

SML Job No.: 174-18

Dear Mr. Katz:

We have analyzed the Tamarack 2.3 Rail for its use in supporting photovoltaic (PV) panels flush mount on enclosed or partially enclosed building roofs and determined that, for the configurations and criteria described below, it is in compliance with the applicable sections of the following reference documents:

Code/References:

- International Building Code 2018 & 2021 Editions
- International Residential Building Code 2018 & 2021 Editions
- ASCE/SEI 7-16 Min. Design Loads for Buildings & Other Structures
- Aluminum Design Manual, ADM-2015 & 2020 Editions

This letter is to address the use and allowable loads for the Tamarack 2.3 Rail Flush Mount System.

<u>Tamarack Solar Products™ – Tamarack 2.3 Rail Flush Mount System</u>

- The testing data provided by Tamarack Solar, dated February 19th, 2019, was performed at the Tamarack facilities and tests were third party observed on site by Starling Madison Lofquist, Inc. (SML) The failure modes for the tests are as follows:
    - Mid and end clamps - aluminum base material ultimate rupture failure with ADM safety factor of 1.95 applied.
    - Rail adapter - aluminum base material ultimate rupture failure with ADM safety factor of 1.95 applied.
    - Rail splice - proof loaded to 2.0 times design load with no residual deformation after load removed.
- We have also reviewed testing data provided by Tamarack Solar, dated October 29th, 2020, which was performed at the Tamarack facilities under SML direction. The failure criteria was rail permanent deformation, which was determined by removing the target load and measuring resultant deformation. The failure mode was rail yielding at permanent deformation onset. Maximum allowable values for these failure conditions were derived using a safety factor of 1.65 per ADM for aluminum yielding failure.

The Tamarack 2.3 Rail Flush Mount System is comprised of a 6000 series extruded aluminum section with an overall depth of 2.3 in. and a net area of 0.444sq.in. The rails are used to support solar PV modules, typically, on the roof of a building. See Exhibit FM-D01 through FM-D03. The PV modules are attached to the rails by the Tamarack mounting clamps as shown in the attached Exhibits. The rails are mounted with a small clearance (flush mounting) and are installed at same slope as the underlying roof structure. The Tamarack Rail Mount Adapter locks the rail to a 3rd party roof mount, such as a tile hook or L-Foot. The 3rd party roof mounting hardware and its attachment to the roof framing are not within the scope of this letter and should be reviewed and approved by others.

The following conversion chart has been created to help clarify the ASCE 7-16 roof zones, which vary from gable to hip and for various roof pitches, while also keeping the spacing tables in as simple a form as possible.

Conversion Chart - SML Table Roof Areas to ASCE 7-16 Roof Zones

Roof Type	Roof Slopes, (deg)	Roof Areas Per SML Tables	Roof Zones Per ASCE 7-16	Effective Wind Area and GCp Range for Leeward Wind, (ft^2)		Effective Wind Area and GCp Range for Windward Wind, (ft^2)	
Gable Roof	0 to 7	1	1`, 1	10 to 500	-1.7 to -1	10 to 100	0.3 to 0.2
		2	2	10 to 500	-2.3 to -1.4	10 to 100	0.3 to 0.2
		3	3	10 to 500	-3.2 to -1.4	10 to 100	0.3 to 0.2
	7 to 20	1	1, 2e	20 to 100	-2 to -0.5	2 to 100	0.7 to 0.3
		2	2n, 2r, 3e	10 to 250	-3 to -1	2 to 100	0.7 to 0.3
		3	3r	10 to 100	-3.6 to -1.8	2 to 100	0.7 to 0.3
	20 to 27	1	1, 2e	20 to 300	-1.5 to -0.8	2 to 100	0.7 to 0.3
		2	2n, 2r, 3e	10 to 150	-2.5 to -1.2	2 to 100	0.7 to 0.3
		3	3r	4 to 50	-3.6 to -1.8	2 to 100	0.7 to 0.3
	27 to 45	1	1, 2e, 2r	10 to 100	-1.8 to -0.8	10 to 100	0.9 to 0.5
		2	2n, 3r	10 to 200	-2 to -1	10 to 100	0.9 to 0.5
		3	3e	2 to 300	-3.2 to -1	10 to 100	0.9 to 0.5
Hip Roof	0 to 7	NA	NA	NA	NA	NA	NA
	7 to 20	1	1	20 to 100	-1.8 to -1	10 to 100	0.7 to 0.3
		2	2r	10 to 200	-2.4 to -1.3	10 to 100	0.7 to 0.3
		3	2e, 3	10 to 200	-2.6 to -1.4	10 to 100	0.7 to 0.3
	20 to 27	1	1	10 to 100	-1.4 to -0.8	10 to 100	0.7 to 0.3
		2	2e, 2r, 3	10 to 200	-2 to -1	10 to 100	0.7 to 0.3
		3	NA	NA	NA	NA	NA
	27 to 45	1	1	10 to 200	-1.5 to -0.7	3 to 100	0.9 to 0.3
		2	2e, 2r	7 to 100	-2.8 to -1	3 to 100	0.9 to 0.3
		3	3	5 to 50	-3.6 to -1	3 to 100	0.9 to 0.3

For each ASCE figure 30.3-2A to 30.3-2H (See Appendix pages following span tables, which each have up to six (6) roof zones, we have converted those to three (3) "Roof Areas" based on their GCp value.) The GCp value ranges shown below have been reduced where applicable based on ASCE 7-16 procedures and effective tributary areas for each component evaluated.

The tables following this letter show the maximum allowable spans for the Tamarack 2.3 Rail Flush Mount System for each associated wind speed, wind exposure category, roof/panel angle, roof area, array zone and ground snow load for gable and hip roofs in the landscape and portrait orientations for 30-foot maximum mean roof heights.

This letter only addresses the maximum spans of the Tamarack 2.3 Rail Flush Mount System. Please see the applicable manufacturer's roof mount installation manual and span tables for the maximum mount spans and other limits to their use. The lesser of these tables and the roof mount tables shall control the installed spacing of the mounts and spans of the rails.

Table Index Hyperlinked Below:

Landscape:

- **Gable – Panel Width = 40in**
- **Hip – Panel Width = 40in**
- **Gable – Panel Width = 45in**
- **Hip – Panel Width = 45in**

Portrait:

- **Gable – Panel Length = 68in**
- **Hip – Panel Length = 68in**
- **Gable – Panel Length = 80in**
- **Hip – Panel Length = 80in**
- **Gable – Panel Length = 96in**
- **Hip – Panel Length = 96in**

There are two "Landscape" sizes, 40in and 45in and these dimensions indicate the width of your PV panel or the upslope dimension to determine which table you need to use. There are three "Portrait" sizes, 68in, 80in and 96in. These dimensions indicate the length of your PV panel or the upslope dimension to determine which table you need to use.

It is acceptable to use alternate size panels and to adjust the allowable spans when the actual upslope tributary dimension fall between those shown in the tables by **linearly interpolating** between table values using the following formula, with the exception that linear interpolation cannot accurately be done where any table value is 96 inches as this value has likely been truncated from a higher value. $Y = Y1 + (Y2 - Y1) / (X2 – X1) * (X – X1)$; where

Landscape or Portrait:

Y = "New Span"; Y1 = "Span from Table Corresponding to X1";
Y2 = "Span from Table Corresponding to X2";
X = "Actual Upslope Tributary Dimension to Rail"; X1 = "Rail Trib from Table Corresponding to Y1"; X2 = "Rail Trib from Table Corresponding to Y2"

Also note that linear interpolation can be done using any of the Gable Tables or Hip Tables, but these cannot be combined. IE. linear interpolation using Gable Landscape and/or Gable Portrait or Hip Landscape and/or Hip Portrait is acceptable, but any combination of Gable and Hip tables is not allowed.

Linear Interpolation Example – Gable Roof using Landscape or Portrait

Example Givens:

- 68"x 42" module
- 120 MPH wind speed
- wind exposure 'C'
- ground snow load 10 psf
- 1:12 roof pitch (4.8 degrees)
- exposed panels
- roof zone 2
- Landscape
    - Actual upslope panel dimension X = 42 inches; using the gable tables with the next lower and higher tributary dimension
- X1 = 40"
- X2 = 45"
- Y1 = 74"
- Y2 = 71"

→ Y = 74" + (71" – 74") / (45" – 40") * (42" – 40") = 72.8" (Interpolated Span)

The following link is a tool that may help: https://x-engineer.org/linear-interpolation-extrapolation-calculator/.

Table Notes for Gable & Hip Roof Tables – Tabulated values are based on the following criteria:

1. Building mean roof height = 30 ft maximum; Risk Category = II.
2. Solar panel & rail dead load = approximately 2.5 psf.
3. ASCE 7-16; The assumed topography is flat with a K_{zt} = 1.0
4. ground elevation factor (K_e) = 1.0
5. γ_E = edge array factor, has been taken as 1.5 for Exposed and 1.0 for Non-Exposed spans as defined in ASCE 7-16 section 29.4.4.
6. γa = solar panel pressure equalization factor, has been reduced from 0.65 based CCP, inc. report 14467 dated April 30, 2020, and the array area tributary to each component evaluated.
7. The snow load stated on the tables is ground snow load and has been reduced as allowed within the building code. If the local jurisdiction governing the installation specifies a minimum roof snow load it shall be converted to a ground snow load following the local building code and any applicable amendments prior to application of the attached tables. No special snow conditions are considered within the tables including unbalanced, drifting, sliding, retention, ponding snow, or rain-on snow surcharge loading. Span tables do not apply to buildings which are intentionally kept below freezing, just above freezing or unheated.
8. PV panels must be supported per the manufacturer's required orientation, location and/or spacing, with the rails in the across roof slope direction. Verification of PV module capacity to support the loads associated with the given array shall be the responsibility of the Contractor or Owner and not Tamarack Solar or Starling Madison Lofquist, Inc.
9. PV panel must comply with mechanical load requirements of UL 1703 OR 2703.
10. Sheathing shall be free of defects including, but not limited to water damage and delamination and must be evaluated by the project Engineer of Record (EOR).
11. Roof rafters or trusses spaced at 24" on center maximum and must be evaluated by the project EOR for structural integrity and capacity as required by the governing jurisdiction.
12. These values do not include any additional increases or load factors, and it is up to the end user to determine any increases permissible by the code.
13. Connection of the rail to the roof structure is the responsibility of the end user and is excluded from this letter. SML takes no liability for connections of the rail to the roof by others.

Our analysis assumes that the connections and associated hardware are installed in a workmanlike manner in accordance with the Tamarack Solar Products™ – Tamarack 2.3 Rail Flush Mount System installation manual and generally accepted standards of construction practice.

It is the responsibility of the contractor to verify that the strength of the roof framing meets the minimum properties used in the tests and can safely support the maximum imposed loads stated within this document.

Starling Madison Lofquist, Inc. and Tamarack Solar Products™ assume no liability beyond what is specifically shown in this letter. Additional information is available at the Tamarack Solar Products™ web site, https://tamaracksolar.com/

Please feel free to contact me at your convenience if you have any questions.

Respectfully yours,

Jesse Light, S.E., P.E.
Principal / President / Sr. Structural Engineer

Scott Hill, P.E.
Professional Licensed Engineer

Tamarack 2.3 Rail – Gable Flush-Mount on 30 Foot Maximum Mean Roof Height – Landscape – Panel Width = 40 Inches or Less

Ground Snow Load	Exposure Category	Roof Pitch	Roof Angle	Wind Speed (mph)	95			100			105			110			115			120			125			130			140			150			160			170			180			190		
				Roof Area	1	2	3	1	2	3	1	2	3	1	2	3	1	2	3	1	2	3	1	2	3	1	2	3	1	2	3	1	2	3	1	2	3	1	2	3	1	2	3	1	2	3
0	B	Flat	0	Non-Exposed	96	96	96	96	96	96	96	96	96	96	96	96	96	96	96	96	96	96	96	96	92	96	96	87	96	96	80	96	89	73	96	83	68	96	77	64	96	72	60	96	68	57
				Exposed	96	96	96	96	96	96	96	96	96	96	96	96	96	96	96	96	92	96	96	87	96	96	83	96	91	76	96	84	70	96	78	65	96	72	61	96	68	58	96	64	55	96
		1:12	4.8	Non-Exposed	96	96	96	96	96	96	96	96	96	96	96	96	96	96	96	96	96	96	96	96	92	96	96	87	96	96	79	96	89	73	96	82	68	96	76	64	96	71	60	96	67	57
				Exposed	96	96	96	96	96	96	96	96	96	96	96	96	96	96	96	96	91	96	96	87	96	96	83	96	91	76	96	84	70	96	77	65	96	72	61	96	68	58	96	64	55	96
		2:12	9.5	Non-Exposed	96	96	96	96	96	96	96	96	96	96	96	96	96	96	95	96	96	90	96	96	85	96	91	81	96	83	74	96	76	68	96	70	64	96	66	60	96	62	56	96	59	53
				Exposed	96	96	96	96	96	96	96	93	96	96	87	96	96	82	96	96	78	96	93	74	96	88	70	96	81	65	96	75	61	96	70	57	96	66	53	96	62	50	96	59	48	0
		3:12	14.0	Non-Exposed	96	96	96	96	96	96	96	96	96	96	96	96	96	96	95	96	96	90	96	95	85	96	91	81	96	82	73	96	75	68	96	70	64	96	66	60	96	62	56	96	59	53
				Exposed	96	96	96	96	96	96	96	92	96	96	87	96	96	82	96	96	77	96	92	74	96	88	70	96	81	65	96	75	61	96	70	57	96	66	53	96	62	50	96	59	48	0
		4:12	18.4	Non-Exposed	96	96	96	96	96	96	96	96	96	96	96	96	96	96	94	96	96	89	96	95	85	96	90	80	96	82	73	96	75	68	96	70	63	96	65	60	96	62	56	96	58	53
				Exposed	96	96	96	96	96	96	96	92	96	96	86	96	96	81	96	96	77	96	92	73	96	88	70	96	81	65	96	75	61	96	70	57	96	65	53	96	62	50	96	58	48	0
		5:12	22.6	Non-Exposed	96	96	96	96	96	96	96	96	96	96	96	96	96	96	96	96	96	96	96	96	96	96	96	91	96	92	83	96	84	76	96	77	70	96	72	65	96	68	61	96	64	57
				Exposed	96	96	96	96	96	96	96	96	96	96	96	96	96	91	96	96	86	96	96	82	96	96	78	96	94	71	96	87	66	96	81	62	96	76	58	96	71	55	96	68	52	96
		6:12	26.6	Non-Exposed	96	96	96	96	96	96	96	96	96	96	96	96	96	96	96	96	96	96	96	96	96	96	96	91	96	91	83	96	84	76	96	77	70	96	72	65	96	68	61	96	64	57
				Exposed	96	96	96	96	96	96	96	96	96	96	96	96	96	90	96	96	86	96	96	81	96	96	78	96	94	71	96	87	66	96	81	62	96	76	58	96	71	55	96	67	52	96
		7:12	30.3	Non-Exposed	96	96	96	96	96	96	96	96	96	96	96	96	96	96	96	96	96	96	96	96	96	96	96	96	96	96	91	96	95	83	96	88	77	96	82	72	96	76	67	94	71	63
				Exposed	96	96	96	96	96	96	96	96	96	96	96	96	96	96	96	96	96	96	96	93	96	96	88	96	87	81	96	80	74	96	73	69	96	69	65	96	65	61	96	61	58	94
		8:12	33.7	Non-Exposed	96	96	96	96	96	96	96	96	96	96	96	96	96	96	96	96	96	96	96	96	96	96	96	96	96	96	90	96	95	83	96	88	77	96	81	71	96	76	67	94	71	63
				Exposed	96	96	96	96	96	96	96	96	96	96	96	96	96	96	96	96	96	96	96	92	96	95	88	96	87	81	96	79	74	96	73	69	96	69	65	96	65	61	96	61	58	94
		9:12	36.9	Non-Exposed	96	96	96	96	96	96	96	96	96	96	96	96	96	96	96	96	96	96	96	96	96	96	96	96	96	96	90	96	94	83	96	87	77	96	81	71	96	76	67	93	71	63
				Exposed	96	96	96	96	96	96	96	96	96	96	96	96	96	96	96	96	96	96	96	92	96	95	88	96	86	80	96	79	74	96	73	69	96	68	65	96	65	61	96	61	58	93
		10:12	39.8	Non-Exposed	96	96	96	96	96	96	96	96	96	96	96	96	96	96	96	96	96	96	96	96	96	96	96	96	96	96	90	96	94	82	96	87	76	96	81	71	96	76	67	93	71	63
				Exposed	96	96	96	96	96	96	96	96	96	96	96	96	96	96	96	96	96	96	96	92	96	94	88	96	86	80	96	79	74	96	73	69	96	68	65	96	65	61	96	61	58	93
		11:12	42.5	Non-Exposed	96	96	96	96	96	96	96	96	96	96	96	96	96	96	96	96	96	96	96	96	96	96	96	96	96	96	89	96	94	82	96	87	76	96	81	71	96	75	67	93	71	63
				Exposed	96	96	96	96	96	96	96	96	96	96	96	96	96	96	96	96	96	96	96	91	96	94	87	96	86	80	96	79	74	96	73	69	96	68	65	96	64	61	96	61	58	93
		12:12	45	Non-Exposed	96	96	96	96	96	96	96	96	96	96	96	96	96	96	96	96	96	96	96	96	96	96	96	96	96	96	89	96	93	82	96	87	76	96	81	71	96	75	67	93	71	63
				Exposed	96	96	96	96	96	96	96	96	96	96	96	96	96	96	96	96	96	96	96	91	96	94	87	96	86	80	96	79	74	96	73	69	96	68	65	96	64	61	96	61	58	93
	C	Flat	0	Non-Exposed	96	96	96	96	96	96	96	96	93	96	96	87	96	96	83	96	96	78	96	91	74	96	87	71	96	79	66	96	73	61	96	68	57	96	64	54	96	60	51	96	57	48
				Exposed	96	96	96	96	93	96	96	88	96	96	83	96	95	78	96	90	75	96	85	71	96	81	68	96	74	63	96	69	59	96	64	55	96	60	52	0	57	49	0	54	46	0
		1:12	4.8	Non-Exposed	96	96	96	96	96	96	96	96	92	96	96	87	96	96	82	96	95	78	96	90	74	96	86	71	96	79	65	96	72	61	96	68	57	96	64	54	96	60	51	96	57	48
				Exposed	96	96	96	96	93	96	96	87	96	96	83	96	94	78	96	89	74	96	85	71	96	81	68	96	74	63	96	69	59	96	64	55	96	60	52	0	57	49	0	54	46	0
		2:12	9.5	Non-Exposed	96	96	96	96	96	92	96	96	86	96	91	81	96	86	76	96	81	72	96	77	69	96	73	66	96	68	61	96	63	57	96	59	54	96	55	50	96	52	48	96	49	45
				Exposed	96	85	96	96	79	96	93	74	96	88	70	96	84	67	96	80	64	96	76	62	96	73	59	96	68	55	96	63	51	96	59	48	0	55	45	0	52	0	0	49	0	0
		3:12	14.0	Non-Exposed	96	96	96	96	96	91	96	96	86	96	90	81	96	85	76	96	81	72	96	77	69	96	73	66	96	67	61	96	63	57	96	59	54	96	55	50	96	52	47	96	49	45
				Exposed	96	84	96	96	79	96	93	74	96	88	70	96	84	67	96	80	64	96	76	61	96	73	59	96	67	55	96	63	51	96	59	48	0	55	45	0	52	0	0	49	0	0
		4:12	18.4	Non-Exposed	96	96	96	96	96	91	96	96	85	96	90	80	96	85	76	96	81	72	96	76	69	96	73	66	96	67	61	96	63	57	96	59	53	96	55	50	96	52	47	96	49	45
				Exposed	96	84	96	96	78	96	92	74	96	88	70	96	83	67	96	79	64	96	76	61	96	73	59	96	67	55	96	63	51	96	59	48	0	55	45	0	52	0	0	49	0	0
		5:12	22.6	Non-Exposed	96	96	96	96	96	96	96	96	96	96	96	91	96	95	86	96	90	81	96	85	77	96	81	73	96	74	67	96	69	62	96	64	58	96	60	54	96	57	50	96	54	47
				Exposed	96	93	96	96	88	96	96	82	96	96	78	96	96	74	96	93	70	96	89	67	96	85	65	96	78	60	96	72	56	96	68	52	96	64	49	96	60	46	0	57	0	0
		6:12	26.6	Non-Exposed	96	96	96	96	96	96	96	96	96	96	96	91	96	94	86	96	89	81	96	85	77	96	81	73	96	74	67	96	68	62	96	64	58	96	60	54	96	57	50	96	54	47
				Exposed	96	93	96	96	87	96	96	82	96	96	77	96	96	73	96	92	70	96	88	67	96	85	64	96	78	60	96	72	56	96	68	52	96	64	49	96	60	46	0	57	0	0
		7:12	30.3	Non-Exposed	96	96	96	96	96	96	96	96	96	96	96	96	96	96	94	96	96	89	96	96	85	96	92	81	96	84	74	96	77	68	94	72	63	89	67	59	84	64	56	80	60	53
				Exposed	96	96	96	96	96	96	96	93	96	95	88	96	90	84	96	85	79	96	81	76	96	77	72	96	70	67	96	66	62	96	62	58	94	58	55	89	55	52	84	52	49	0
		8:12	33.7	Non-Exposed	96	96	96	96	96	96	96	96	96	96	96	96	96	96	93	96	96	89	96	96	84	96	92	80	96	84	74	96	77	68	94	71	63	89	67	59	84	63	56	79	60	52
				Exposed	96	96	96	96	96	96	96	93	96	95	88	96	90	83	96	85	79	96	81	75	96	77	72	96	70	67	96	66	62	96	61	58	94	58	55	89	55	52	84	52	49	0
		9:12	36.9	Non-Exposed	96	96	96	96	96	96	96	96	96	96	96	96	96	96	93	96	96	88	96	96	84	96	91	80	96	84	73	96	77	68	94	71	63	88	67	59	84	63	56	79	60	52
				Exposed	96	96	96	96	96	96	96	93	96	95	88	96	89	83	96	85	79	96	81	75	96	77	72	96	70	67	96	65	62	96	61	58	94	58	55	88	55	52	84	52	49	0
		10:12	39.8	Non-Exposed	96	96	96	96	96	96	96	96	96	96	96	96	96	96	93	96	96	88	96	95	84	96	91	80	96	83	73	96	77	68	93	71	63	88	67	59	83	63	56	79	60	52
				Exposed	96	96	96	96	96	96	96	92	96	94	87	96	89	83	96	85	79	96	80	75	96	76	72	96	70	66	96	65	62	96	61	58	93	58	55	88	54	52	83	52	49	0
		11:12	42.5	Non-Exposed	96	96	96	96	96	96	96	96	96	96	96	96	96	96	92	96	96	88	96	95	84	96	91	80	96	83	73	96	77	68	93	71	63	88	67	59	83	63	55	79	60	52
				Exposed	96	96	96	96	96	96	96	92	96	94	87	96	89	83	96	84	79	96	80	75	96	76	71	96	70	66	96	65	62	96	61	58	93	58	55	88	54	52	83	52	49	0
		12:12	45	Non-Exposed	96	96	96	96	96	96	96	96	96	96	96	96	96	96	92	96	96	88	96	95	83	96	91	80	96	83	73	96	77	68	93	71	63	88	67	59	83	63	55	79	60	52
				Exposed	96	96	96	96	96	96	96	92	96	94	87	96	89	82	96	84	78	96	80	75	96	76	71	96	70	66	96	65	62	96	61	58	93	58	55	88	54	52	83	52	49	0
	D	Flat	0	Non-Exposed	96	96	95	96	96	89	96	96	83	96	96	78	96	91	74	96	86	71	96	82	68	96	78	65	96	71	60	96	66	56	96	62	52	96	58	49	96	55	46	96	52	0
				Exposed	96	90	96	96	84	96	95	79	96	90	75	96	85	71	96	81	68	96	77	65	96	73	62	96	68	58	96	63	54	96	59	50	0	55	47	0	52	45	0	49	0	0
		1:12	4.8	Non-Exposed	96	96	94	96	96	88	96	96	83	96	95	78	96	90	74	96	86	70	96	82	67	96	78	65	96	71	60	96	66	56	96	62	52	96	58	49	96	55	46	96	52	0
				Exposed	96	89	96	96	84	96	95	79	96	90	75	96	85	71	96	81	68	96	77	65	96	73	62	96	67	58	96	63	54	96	59	50	0	55	47	0	52	45	0	49	0	0
		2:12	9.5	Non-Exposed	96	96	88	96	92	82	96	87	77	96	82	73	96	77	69	96	73	66	96	70	63	96	67	61	96	62	56	96	58	53	96	54	49	96	51	46	96	48	0	96	45	0
				Exposed	95	76	96	89	71	96	85	68	96	80	64	96	76	62	96	73	59	96	70	56	96	67	54	96	62	50	96	58	47	0	54	0	0	51	0	0	48	0	0	45	0	0
		3:12	14.0	Non-Exposed	96	96	87	96	92	82	96	86	77	96	81	72	96	77	69	96	73	66	96	69	63	96	67	61	96	62	56	96	58	52	96	54	49	96	51	46	96	48	0	96	45	0
				Exposed	94	76	96	89	71	96	84	67	96	80	64	96	76	61	96	72	59	96	69	56	96	67	54	96	62	50	96	58	47	0	54	0	0	51	0	0	48	0	0	45	0	0
		4:12	18.4	Non-Exposed	96	96	87	96	91	81	96	86	76	96	81	72	96	76	69	96	72	66	96	69	63	96	67	61	96	62	56	96	57	52	96	54	49	96	51	46	96	48	0	96	45	0
				Exposed	94	75	96	89	71	96	84	67	96	80	64	96	76	61	96	72	59	96	69	56	96	67	54	96	62	50	96	57	47	0	54	0	0	51	0	0	48	0	0	45	0	0
		5:12	22.6	Non-Exposed	96	96	96	96	96	92	96	96	87	96	90	82	96	85	77	96	81	73	96	77	70	96	73	66	96	68	61	96	63	56	96	59	52	96	55	49	96	52	46	96	50	43
				Exposed	96	84	96	96	79	96	96	74	96	93	70	96	89	67	96	85	64	96	81	62	96	77	59	96	71	55	96	66	51	96	62	48	96	58	45	0	55	0	0	52	0	0
		6:12	26.6	Non-Exposed	96	96	96	96	96	92	96	95	86	96	90	81	96	85	77	96	81	73	96	77	69	96	73	66	96	67	61	96	63	56	96	59	52	96	55	49	96	52	46	95	49	43
				Exposed	96	84	96	96	79	96	96	74	96	93	70	96	88	67	96	84	64	96	81	62	96	77	59	96	71	55	96	66	51	96	62	48	0	58	45	0	55	0	0	52	0	0
		7:12	30.3	Non-Exposed	96	96	96	96	96	96	96	96	95	96	96	89	96	96	85	96	92	80	96	87	76	96	83	73	96	76	67	93	70	62	87	66	58	82	62	54	77	58	51	73	55	48
				Exposed	96	95	96	96	89	96	91	84	96	86	80	96	81	76	96	77	72	96	73	69	96	70	66	96	65	61	96	60	57	93	57	54	87	53	50	82	50	48	0	48	45	0
		8:12	33.7	Non-Exposed	96	96	96	96	96	96	96	96	94	96	96	89	96	96	84	96	91	80	96	87	76	96	83	73	96	76	67	92	70	62	87	66	58	82	62	54	77	58	51	73	55	48
				Exposed	96	95	96	96	89	96	91	84	96	85	79	96	81	75	96	76	72	96	73	69	96	70	66	96	65	61	96	60	57	92	56	54	87	53	50	82	50	48	0	47	45	0
		9:12	36.9	Non-Exposed	96	96	96	96	96	96	96	96	94	96	96	89	96	96	84	96	91	80	96	87	76	96	83	72	96	76	67	92	70	62	86	66	58	81	62	54	77	58	51	73	55	48
				Exposed	96	94	96	96	89	96	90	84	96	85	79	96	80	75	96	76	71	96	72	69	96	69	66	96	64	61	96	60	57	92	56	53	86	53	50	81	50	48	0	47	45	0
		10:12	39.8	Non-Exposed	96	96	96	96	96	96	96	96	93	96	96	88	96	95	84	96	91	80	96	86	76	96	82	72	96	75	67	92	70	62	86	65	58	81	62	54	77	58	51	73	55	48
				Exposed	96	94	96	96	89	96	90	84	96	85	79	96	80	75	96	76	71	96	72	68	96	69	66	96	64	61	96	60	57	92	56	53	86	53	50	81	50	47	0	47	45	0
		11:12	42.5	Non-Exposed	96	96	96	96	96	96	96	96	93	96	96	88	96	95	84	96	90	79	96	86	76	96	82	72	96	75	67	91	70	62	86	65	58	81	62	54	77	58	51	72	55	48
				Exposed	96	94	96	95	88	96	90	83	96	85	79	96	80	75	96	76	71	96	72	68	96	69	66	96	64	61	96	60	57	91	56	53	86	53	50	81	50	47	0	47	45	0
		12:12	45	Non-Exposed	96	96	96	96	96	96	96	96	93	96	96	88	96	95	83	96	90	79	96	86	75	96	82	72	96	75	66	91	70	62	86	65	57	81	61	54	76	58	51	72	55	48
				Exposed	96	93	96	95	88	96	89	83	96	84	79	96	80	75	96	76	71	96	72	68	96	69	66	96	64	61	96	60	57	91	56	53	86	53	50	81	50	47	0	47	45	0

Tamarack 2.3 Rail – Gable Flush-Mount on 30 Foot Maximum Mean Roof Height – Landscape – Panel Width = 40 Inches or Less

Ground Snow Load	Exposure Category	Roof Pitch	Roof Angle	Wind Speed (mph)	95			100			105			110			115			120			125			130			140			150			160			170			180			190		
				Roof Area	1	2	3	1	2	3	1	2	3	1	2	3	1	2	3	1	2	3	1	2	3	1	2	3	1	2	3	1	2	3	1	2	3	1	2	3	1	2	3	1	2	3
5	B	Flat	0	Non-Exposed	96	96	96	96	96	96	96	96	96	96	96	96	96	96	96	96	96	96	96	96	92	96	96	87	96	96	80	96	89	73	96	83	68	96	77	64	96	72	60	96	68	57
				Exposed	96	96	96	96	96	96	96	96	96	96	96	96	96	96	96	96	92	96	96	87	96	96	83	96	91	76	96	84	70	96	78	65	96	72	61	96	68	58	96	64	55	96
		1:12	4.8	Non-Exposed	96	96	96	96	96	96	96	96	96	96	96	96	96	96	96	96	96	96	96	96	92	96	96	87	96	96	79	96	89	73	96	82	68	96	76	64	96	71	60	96	67	57
				Exposed	96	96	96	96	96	96	96	96	96	96	96	96	96	96	96	96	91	96	96	87	96	96	83	96	91	76	96	84	70	96	77	65	96	72	61	96	68	58	96	64	55	96
		2:12	9.5	Non-Exposed	96	96	96	96	96	96	96	96	96	96	96	96	96	96	95	96	96	90	96	96	85	96	91	81	96	83	74	96	76	68	96	70	64	96	66	60	96	62	56	96	59	53
				Exposed	96	96	96	96	96	96	96	93	96	96	87	96	96	82	96	96	78	96	93	74	96	88	70	96	81	65	96	75	61	96	70	57	96	66	53	96	62	50	96	59	48	0
		3:12	14.0	Non-Exposed	96	96	96	96	96	96	96	96	96	96	96	96	96	96	95	96	96	90	96	95	85	96	91	81	96	82	73	96	75	68	96	70	64	96	66	60	96	62	56	96	59	53
				Exposed	96	96	96	96	96	96	96	92	96	96	87	96	96	82	96	96	77	96	92	74	96	88	70	96	81	65	96	75	61	96	70	57	96	66	53	96	62	50	96	59	48	0
		4:12	18.4	Non-Exposed	96	96	96	96	96	96	96	96	96	96	96	96	96	96	94	96	96	89	96	95	85	96	90	80	96	82	73	96	75	68	96	70	63	96	65	60	96	62	56	96	58	53
				Exposed	96	96	96	96	96	96	96	92	96	96	86	96	96	81	96	96	77	96	92	73	96	88	70	96	81	65	96	75	61	96	70	57	96	65	53	96	62	50	96	58	48	0
		5:12	22.6	Non-Exposed	96	96	96	96	96	96	96	96	96	96	96	96	96	96	96	96	96	96	96	96	96	96	96	91	96	92	83	96	84	76	96	77	70	96	72	65	96	68	61	96	64	57
				Exposed	96	96	96	96	96	96	96	96	96	96	96	96	96	91	96	96	86	96	96	82	96	96	78	96	94	71	96	87	66	96	81	62	96	76	58	96	71	55	96	68	52	96
		6:12	26.6	Non-Exposed	96	96	96	96	96	96	96	96	96	96	96	96	96	96	96	96	96	96	96	96	91	96	96	91	96	91	83	96	84	76	96	77	70	96	72	65	96	68	61	96	64	57
				Exposed	96	96	96	96	96	96	96	96	96	96	96	96	96	90	96	96	86	96	96	81	96	96	78	96	94	71	96	87	66	96	81	62	96	76	58	96	71	55	96	67	52	96
		7:12	30.3	Non-Exposed	96	96	96	96	96	96	96	96	96	96	96	96	96	96	96	96	96	96	96	96	96	96	96	96	96	96	91	96	95	83	96	88	77	96	82	72	96	76	67	94	71	63
				Exposed	96	96	96	96	96	96	96	96	96	96	96	96	96	96	96	96	96	96	96	93	96	96	88	96	87	81	96	80	74	96	73	69	96	69	65	96	65	61	96	61	58	94
		8:12	33.7	Non-Exposed	96	96	96	96	96	96	96	96	96	96	96	96	96	96	96	96	96	96	96	96	96	96	96	96	96	96	90	96	95	83	96	88	77	96	81	71	96	76	67	94	71	63
				Exposed	96	96	96	96	96	96	96	96	96	96	96	96	96	96	96	96	96	96	96	92	96	95	88	96	87	81	96	79	74	96	73	69	96	69	65	96	65	61	96	61	58	94
		9:12	36.9	Non-Exposed	96	96	96	96	96	96	96	96	96	96	96	96	96	96	96	96	96	96	96	96	96	96	96	96	96	96	90	96	94	83	96	87	77	96	81	71	96	76	67	93	71	63
				Exposed	96	96	96	96	96	96	96	96	96	96	96	96	96	96	96	96	96	96	96	92	96	95	88	96	86	80	96	79	74	96	73	69	96	68	65	96	65	61	96	61	58	93
		10:12	39.8	Non-Exposed	96	96	96	96	96	96	96	96	96	96	96	96	96	96	96	96	96	96	96	96	96	96	96	96	96	96	90	96	94	82	96	87	76	96	81	71	96	76	67	93	71	63
				Exposed	96	96	96	96	96	96	96	96	96	96	96	96	96	96	96	96	96	96	96	92	96	94	88	96	86	80	96	79	74	96	73	69	96	68	65	96	65	61	96	61	58	93
		11:12	42.5	Non-Exposed	96	96	96	96	96	96	96	96	96	96	96	96	96	96	96	96	96	96	96	96	96	96	96	96	96	96	89	96	94	82	96	87	76	96	81	71	96	75	67	93	71	63
				Exposed	96	96	96	96	96	96	96	96	96	96	96	96	96	96	96	96	96	96	96	91	96	94	87	96	86	80	96	79	74	96	73	69	96	68	65	96	64	61	96	61	58	93
		12:12	45	Non-Exposed	96	96	96	96	96	96	96	96	96	96	96	96	96	96	96	96	96	96	96	96	96	96	96	96	96	96	89	96	93	82	96	87	76	96	81	71	96	75	67	93	71	63
				Exposed	96	96	96	96	96	96	96	96	96	96	96	96	96	96	96	96	96	96	96	91	96	94	87	96	86	80	96	79	74	96	73	69	96	68	65	96	64	61	96	61	58	93
	C	Flat	0	Non-Exposed	96	96	96	96	96	96	96	96	93	96	96	87	96	96	83	96	96	78	96	91	74	96	87	71	96	79	66	96	73	61	96	68	57	96	64	54	96	60	51	96	57	48
				Exposed	96	96	96	96	93	96	96	88	96	96	83	96	95	78	96	90	75	96	85	71	96	81	68	96	74	63	96	69	59	96	64	55	96	60	52	0	57	49	0	54	46	0
		1:12	4.8	Non-Exposed	96	96	96	96	96	96	96	96	92	96	96	87	96	96	82	96	95	78	96	90	74	96	86	71	96	79	65	96	72	61	96	68	57	96	64	54	96	60	51	96	57	48
				Exposed	96	96	96	96	93	96	96	87	96	96	83	96	94	78	96	89	74	96	85	71	96	81	68	96	74	63	96	69	59	96	64	55	96	60	52	0	57	49	0	54	46	0
		2:12	9.5	Non-Exposed	96	96	96	96	96	92	96	96	86	96	91	81	96	86	76	96	81	72	96	77	69	96	73	66	96	68	61	96	63	57	96	59	54	96	55	50	96	52	48	96	49	45
				Exposed	96	85	96	96	79	96	93	74	96	88	70	96	84	67	96	80	64	96	76	62	96	73	59	96	68	55	96	63	51	96	59	48	0	55	45	0	52	0	0	49	0	0
		3:12	14.0	Non-Exposed	96	96	96	96	96	91	96	96	86	96	90	81	96	85	76	96	81	72	96	77	69	96	73	66	96	67	61	96	63	57	96	59	54	96	55	50	96	52	47	96	49	45
				Exposed	96	84	96	96	79	96	93	74	96	88	70	96	84	67	96	80	64	96	76	61	96	73	59	96	67	55	96	63	51	96	59	48	0	55	45	0	52	0	0	49	0	0
		4:12	18.4	Non-Exposed	96	96	96	96	96	91	96	96	85	96	90	80	96	85	76	96	81	72	96	76	69	96	73	66	96	67	61	96	63	57	96	59	53	96	55	50	96	52	47	96	49	45
				Exposed	96	84	96	96	78	96	92	74	96	88	70	96	83	67	96	79	64	96	76	61	96	73	59	96	67	55	96	63	51	96	59	48	0	55	45	0	52	0	0	49	0	0
		5:12	22.6	Non-Exposed	96	96	96	96	96	96	96	96	96	96	96	91	96	95	86	96	90	81	96	85	77	96	81	73	96	74	67	96	69	62	96	64	58	96	60	54	96	57	50	96	54	47
				Exposed	96	93	96	96	88	96	96	82	96	96	78	96	96	74	96	93	70	96	89	67	96	85	65	96	78	60	96	72	56	96	68	52	96	64	49	96	60	46	0	57	0	0
		6:12	26.6	Non-Exposed	96	96	96	96	96	96	96	96	96	96	96	91	96	94	86	96	89	81	96	85	77	96	81	73	96	74	67	96	68	62	96	64	58	96	60	54	96	57	50	96	54	47
				Exposed	96	93	96	96	87	96	96	82	96	96	77	96	96	73	96	92	70	96	88	67	96	85	64	96	78	60	96	72	56	96	68	52	96	64	49	96	60	46	0	57	0	0
		7:12	30.3	Non-Exposed	96	96	96	96	96	96	96	96	96	96	96	96	96	96	94	96	96	89	96	96	85	96	92	81	96	84	74	96	77	68	94	72	63	89	67	59	84	64	56	80	60	53
				Exposed	96	96	96	96	96	96	96	93	96	95	88	96	90	84	96	85	79	96	81	76	96	77	72	96	70	67	96	66	62	96	62	58	94	58	55	89	55	52	84	52	49	0
		8:12	33.7	Non-Exposed	96	96	96	96	96	96	96	96	96	96	96	96	96	96	93	96	96	89	96	96	84	96	92	80	96	84	74	96	77	68	94	71	63	89	67	59	84	63	56	79	60	52
				Exposed	96	96	96	96	96	96	96	93	96	95	88	96	90	83	96	85	79	96	81	75	96	77	72	96	70	67	96	66	62	96	61	58	94	58	55	89	55	52	84	52	49	0
		9:12	36.9	Non-Exposed	96	96	96	96	96	96	96	96	96	96	96	96	96	96	93	96	96	88	96	96	84	96	91	80	96	84	73	96	77	68	94	71	63	88	67	59	84	63	56	79	60	52
				Exposed	96	96	96	96	96	96	96	93	96	95	88	96	89	83	96	85	79	96	81	75	96	77	72	96	70	67	96	65	62	96	61	58	94	58	55	88	55	52	84	52	49	0
		10:12	39.8	Non-Exposed	96	96	96	96	96	96	96	96	96	96	96	96	96	96	93	96	96	88	96	95	84	96	91	80	96	83	73	96	77	68	93	71	63	88	67	59	83	63	56	79	60	52
				Exposed	96	96	96	96	96	96	96	92	96	94	87	96	89	83	96	85	79	96	80	75	96	76	72	96	70	66	96	65	62	96	61	58	93	58	55	88	54	52	83	52	49	0
		11:12	42.5	Non-Exposed	96	96	96	96	96	96	96	96	96	96	96	96	96	96	92	96	96	88	96	95	84	96	91	80	96	83	73	96	77	68	93	71	63	88	67	59	83	63	55	79	60	52
				Exposed	96	96	96	96	96	96	96	92	96	94	87	96	89	83	96	84	79	96	80	75	96	76	71	96	70	66	96	65	62	96	61	58	93	58	55	88	54	52	83	52	49	0
		12:12	45	Non-Exposed	96	96	96	96	96	96	96	96	96	96	96	96	96	96	92	96	96	88	96	95	83	96	91	80	96	83	73	96	77	68	93	71	63	88	67	59	83	63	55	79	60	52
				Exposed	96	96	96	96	96	96	96	92	96	94	87	96	89	82	96	84	78	96	80	75	96	76	71	96	70	66	96	65	62	96	61	58	93	58	55	88	54	52	83	52	49	0
	D	Flat	0	Non-Exposed	96	96	95	96	96	89	96	96	83	96	96	78	96	91	74	96	86	71	96	82	68	96	78	65	96	71	60	96	66	56	96	62	52	96	58	49	96	55	46	96	52	0
				Exposed	96	90	96	96	84	96	95	79	96	90	75	96	85	71	96	81	68	96	77	65	96	73	62	96	68	58	96	63	54	96	59	50	0	55	47	0	52	45	0	49	0	0
		1:12	4.8	Non-Exposed	96	96	94	96	96	88	96	96	83	96	95	78	96	90	74	96	86	70	96	82	67	96	78	65	96	71	60	96	66	56	96	62	52	96	58	49	96	55	46	96	52	0
				Exposed	96	89	96	96	84	96	95	79	96	90	75	96	85	71	96	81	68	96	77	65	96	73	62	96	67	58	96	63	54	96	59	50	0	55	47	0	52	45	0	49	0	0
		2:12	9.5	Non-Exposed	96	96	88	96	92	82	96	87	77	96	82	73	96	77	69	96	73	66	96	70	63	96	67	61	96	62	56	96	58	53	96	54	49	96	51	46	96	48	0	96	45	0
				Exposed	95	76	96	89	71	96	85	68	96	80	64	96	76	62	96	73	59	96	70	56	96	67	54	96	62	50	96	58	47	0	54	0	0	51	0	0	48	0	0	45	0	0
		3:12	14.0	Non-Exposed	96	96	87	96	92	82	96	86	77	96	81	72	96	77	69	96	73	66	96	69	63	96	67	61	96	62	56	96	58	52	96	54	49	96	51	46	96	48	0	95	45	0
				Exposed	94	76	96	89	71	96	84	67	96	80	64	96	76	61	96	72	59	96	69	56	96	67	54	96	62	50	96	58	47	0	54	0	0	51	0	0	48	0	0	45	0	0
		4:12	18.4	Non-Exposed	96	96	87	96	91	81	96	86	76	96	81	72	96	76	69	96	72	66	96	69	63	96	67	61	96	62	56	96	57	52	96	54	49	96	51	46	96	48	0	96	45	0
				Exposed	94	75	96	89	71	96	84	67	96	80	64	96	76	61	96	72	59	96	69	56	96	67	54	96	62	50	96	57	47	0	54	0	0	51	0	0	48	0	0	45	0	0
		5:12	22.6	Non-Exposed	96	96	96	96	96	92	96	96	87	96	90	82	96	85	77	96	81	73	96	77	70	96	73	66	96	68	61	96	63	56	96	59	52	96	55	49	96	52	46	96	50	43
				Exposed	96	84	96	96	79	96	96	74	96	93	70	96	89	67	96	85	64	96	81	62	96	77	59	96	71	55	96	66	51	96	62	48	96	58	45	0	55	0	0	52	0	0
		6:12	26.6	Non-Exposed	96	96	96	96	96	92	96	95	86	96	90	81	96	85	77	96	81	73	96	77	69	96	73	66	96	67	61	96	63	56	96	59	52	96	55	49	96	52	46	95	49	43
				Exposed	96	84	96	96	79	96	96	74	96	93	70	96	88	67	96	84	64	96	81	62	96	77	59	96	71	55	96	66	51	96	62	48	0	58	45	0	55	0	0	52	0	0
		7:12	30.3	Non-Exposed	96	96	96	96	96	96	96	96	95	96	96	89	96	96	85	96	92	80	96	87	76	96	83	73	96	76	67	93	70	62	87	66	58	82	62	54	77	58	51	73	55	48
				Exposed	96	95	96	96	89	96	91	84	96	86	80	96	81	76	96	77	72	96	73	69	96	70	66	96	65	61	96	60	57	93	57	54	87	53	50	82	50	48	0	48	45	0
		8:12	33.7	Non-Exposed	96	96	96	96	96	96	96	96	94	96	96	89	96	96	84	96	91	80	96	87	76	96	83	73	96	76	67	92	70	62	87	66	58	82	62	54	77	58	51	73	55	48
				Exposed	96	95	96	96	89	96	91	84	96	85	79	96	81	75	96	76	72	96	73	69	96	70	66	96	65	61	96	60	57	92	56	54	87	53	50	82	50	48	0	47	45	0
		9:12	36.9	Non-Exposed	96	96	96	96	96	96	96	96	94	96	96	89	96	96	84	96	91	80	96	87	76	96	83	72	96	76	67	92	70	62	86	66	58	81	62	54	77	58	51	73	55	48
				Exposed	96	94	96	96	89	96	90	84	96	85	79	96	80	75	96	76	71	96	72	69	96	69	66	96	64	61	96	60	57	92	56	53	86	53	50	81	50	48	0	47	45	0
		10:12	39.8	Non-Exposed	96	96	96	96	96	96	96	96	93	96	96	88	96	95	84	96	91	80	96	86	76	96	82	72	96	75	67	92	70	62	86	65	58	81	62	54	77	58	51	73	55	48
				Exposed	96	94	96	96	89	96	90	84	96	85	79	96	80	75	96	76	71	96	72	68	96	69	66	96	64	61	96	60	57	92	56	53	86	53	50	81	50	47	0	47	45	0
		11:12	42.5	Non-Exposed	96	96	96	96	96	96	96	96	93	96	96	88	96	95	84	96	90	79	96	86	76	96	82	72	96	75	67	91	70	62	86	65	58	81	62	54	77	58	51	72	55	48
				Exposed	96	94	96	95	88	96	90	83	96	85	79	96	80	75	96	76	71	96	72	68	96	69	66	96	64	61	96	60	57	91	56	53	86	53	50	81	50	47	0	47	45	0
		12:12	45	Non-Exposed	96	96	96	96	96	96	96	96	93	96	96	88	96	95	83	96	90	79	96	86	75	96	82	72	96	75	66	91	70	62	86	65	57	81	61	54	76	58	51	72	55	48
				Exposed	96	93	96	95	88	96	89	83	96	84	79	96	80	75	96	76	71	96	72	68	96	69	66	96	64	61	96	60	57	91	56	53	86	53	50	81	50	47	0	47	45	0

Tamarack 2.3 Rail – Gable Flush-Mount on 30 Foot Maximum Mean Roof Height – Landscape – Panel Width = 40 Inches or Less

Ground Snow Load	Exposure Category	Roof Pitch	Roof Angle	Wind Speed (mph)	95			100			105			110			115			120			125			130			140			150			160			170			180			190		
				Roof Area	1	2	3	1	2	3	1	2	3	1	2	3	1	2	3	1	2	3	1	2	3	1	2	3	1	2	3	1	2	3	1	2	3	1	2	3	1	2	3	1	2	3
10	B	Flat	0	Non-Exposed	96	96	96	96	96	96	96	96	96	96	96	96	96	96	96	96	96	96	96	96	92	96	96	87	96	96	80	96	89	73	96	83	68	96	77	64	96	72	60	96	68	57
				Exposed	96	96	96	96	96	96	96	96	96	96	96	96	96	96	96	96	92	96	96	87	96	96	83	96	91	76	96	84	70	96	78	65	96	72	61	96	68	58	96	64	55	96
		1:12	4.8	Non-Exposed	96	96	96	96	96	96	96	96	96	96	96	96	96	96	96	96	96	96	96	96	92	96	96	87	96	96	79	96	89	73	96	82	68	96	76	64	96	71	60	96	67	57
				Exposed	96	96	96	96	96	96	96	96	96	96	96	96	96	96	96	96	91	96	96	87	96	96	83	96	91	76	96	84	70	96	77	65	96	72	61	96	68	58	96	64	55	96
		2:12	9.5	Non-Exposed	96	96	96	96	96	96	96	96	96	96	96	96	96	96	95	96	96	90	96	96	85	96	91	81	96	83	74	96	76	68	96	70	64	96	66	60	96	62	56	96	59	53
				Exposed	96	96	96	96	96	96	96	93	96	96	87	96	96	82	96	96	78	96	93	74	96	88	70	96	81	65	96	75	61	96	70	57	96	66	53	96	62	50	96	59	48	0
		3:12	14.0	Non-Exposed	96	96	96	96	96	96	96	96	96	96	96	96	96	96	95	96	96	90	96	95	85	96	91	81	96	82	73	96	75	68	96	70	64	96	66	60	96	62	56	95	59	53
				Exposed	96	96	96	96	96	96	96	92	96	96	87	96	96	82	96	96	77	96	92	74	96	88	70	96	81	65	96	75	61	96	70	57	96	66	53	96	62	50	96	59	48	0
		4:12	18.4	Non-Exposed	96	96	96	96	96	96	96	96	96	96	96	96	96	96	94	96	96	89	96	95	85	96	90	80	96	82	73	96	75	68	96	70	63	96	65	60	96	62	56	96	58	53
				Exposed	96	96	96	96	96	96	96	92	96	96	86	96	96	81	96	96	77	96	92	73	96	88	70	96	81	65	96	75	61	96	70	57	96	65	53	96	62	50	96	58	48	0
		5:12	22.6	Non-Exposed	96	96	96	96	96	96	96	96	96	96	96	96	96	96	96	96	96	96	96	96	96	96	96	91	96	92	83	96	84	76	96	77	70	96	72	65	96	68	61	96	64	57
				Exposed	96	96	96	96	96	96	96	96	96	96	96	96	96	91	96	96	86	96	96	82	96	96	78	96	94	71	96	87	66	96	81	62	96	76	58	96	71	55	96	68	52	96
		6:12	26.6	Non-Exposed	96	96	96	96	96	96	96	96	96	96	96	96	96	96	96	96	96	96	96	96	96	96	96	91	96	91	83	96	84	76	96	77	70	96	72	65	96	68	61	96	64	57
				Exposed	96	96	96	96	96	96	96	96	96	96	96	96	96	90	96	96	86	96	96	81	96	96	78	96	94	71	96	87	66	96	81	62	96	76	58	96	71	55	96	67	52	96
		7:12	30.3	Non-Exposed	96	96	96	96	96	96	96	96	96	96	96	96	96	96	96	96	96	96	96	96	96	96	96	96	96	96	91	96	95	83	96	88	77	94	82	72	91	76	67	88	71	63
				Exposed	96	96	96	96	96	96	96	96	96	96	96	96	96	96	96	96	96	96	96	93	96	96	88	96	87	81	96	80	74	96	73	69	96	69	65	94	65	61	91	61	58	88
		8:12	33.7	Non-Exposed	96	96	96	96	96	96	96	96	96	96	96	96	96	96	96	96	96	96	96	96	96	96	96	96	96	96	90	96	95	83	96	88	77	95	81	71	92	76	67	89	71	63
				Exposed	96	96	96	96	96	96	96	96	96	96	96	96	96	96	96	96	96	96	96	92	96	95	88	96	87	81	96	79	74	96	73	69	96	69	65	95	65	61	92	61	58	89
		9:12	36.9	Non-Exposed	96	96	96	96	96	96	96	96	96	96	96	96	96	96	96	96	96	96	96	96	96	96	96	96	96	96	90	96	94	83	96	87	77	96	81	71	93	76	67	90	71	63
				Exposed	96	96	96	96	96	96	96	96	96	96	96	96	96	96	96	96	96	96	96	92	96	95	88	96	86	80	96	79	74	96	73	69	96	68	65	96	65	61	93	61	58	90
		10:12	39.8	Non-Exposed	96	96	96	96	96	96	96	96	96	96	96	96	96	96	96	96	96	96	96	96	96	96	96	96	96	96	90	96	94	82	96	87	76	96	81	71	94	76	67	91	71	63
				Exposed	96	96	96	96	96	96	96	96	96	96	96	96	96	96	96	96	96	96	96	92	96	94	88	96	86	80	96	79	74	96	73	69	96	68	65	96	65	61	94	61	58	91
		11:12	42.5	Non-Exposed	96	96	96	96	96	96	96	96	96	96	96	96	96	96	96	96	96	96	96	96	96	96	96	96	96	96	89	96	94	82	96	87	76	96	81	71	96	75	67	92	71	63
				Exposed	96	96	96	96	96	96	96	96	96	96	96	96	96	96	96	96	96	96	96	91	96	94	87	96	86	80	96	79	74	96	73	69	96	68	65	96	64	61	96	61	58	92
		12:12	45	Non-Exposed	96	96	96	96	96	96	96	96	96	96	96	96	96	96	96	96	96	96	96	96	96	96	96	96	96	96	89	96	93	82	96	87	76	96	81	71	96	75	67	93	71	63
				Exposed	96	96	96	96	96	96	96	96	96	96	96	96	96	96	96	96	96	96	96	91	96	94	87	96	86	80	96	79	74	96	73	69	96	68	65	96	64	61	96	61	58	93
	C	Flat	0	Non-Exposed	96	96	96	96	96	96	96	96	93	96	96	87	96	96	83	96	96	78	96	91	74	96	87	71	96	79	66	96	73	61	96	68	57	96	64	54	96	60	51	96	57	48
				Exposed	96	96	96	96	93	96	96	88	96	96	83	96	95	78	96	90	75	96	85	71	96	81	68	96	74	63	96	69	59	96	64	55	96	60	52	0	57	49	0	54	46	0
		1:12	4.8	Non-Exposed	96	96	96	96	96	96	96	96	92	96	96	87	96	96	82	96	95	78	96	90	74	96	86	71	96	79	65	96	72	61	96	68	57	96	64	54	96	60	51	96	57	48
				Exposed	96	96	96	96	93	96	96	87	96	96	83	96	94	78	96	89	74	96	85	71	96	81	68	96	74	63	96	69	59	96	64	55	96	60	52	0	57	49	0	54	46	0
		2:12	9.5	Non-Exposed	96	96	96	96	96	92	96	96	86	96	91	81	96	86	76	96	81	72	96	77	69	96	73	66	96	68	61	96	63	57	96	59	54	95	55	50	93	52	48	90	49	45
				Exposed	96	85	96	96	79	96	93	74	96	88	70	96	84	67	96	80	64	96	76	62	96	73	59	96	68	55	96	63	51	96	59	48	0	55	45	0	52	0	0	49	0	0
		3:12	14.0	Non-Exposed	96	96	96	96	96	91	96	96	86	96	90	81	96	85	76	96	81	72	96	77	69	96	73	66	96	67	61	96	63	57	95	59	54	93	55	50	90	52	47	88	49	45
				Exposed	96	84	96	96	79	96	93	74	96	88	70	96	84	67	96	80	64	96	76	61	96	73	59	96	67	55	96	63	51	96	59	48	0	55	45	0	52	0	0	49	0	0
		4:12	18.4	Non-Exposed	96	96	96	96	96	91	96	96	85	96	90	80	96	85	76	96	81	72	96	76	69	96	73	66	96	67	61	96	63	57	96	59	53	96	55	50	93	52	47	91	49	45
				Exposed	96	84	96	96	78	96	92	74	96	88	70	96	83	67	96	79	64	96	76	61	96	73	59	96	67	55	96	63	51	96	59	48	0	55	45	0	52	0	0	49	0	0
		5:12	22.6	Non-Exposed	96	96	96	96	96	96	96	96	96	96	96	91	96	95	86	96	90	81	96	85	77	96	81	73	96	74	67	96	69	62	96	64	58	96	60	54	94	57	50	91	54	47
				Exposed	96	93	96	96	88	96	96	82	96	96	78	96	96	74	96	93	70	96	89	67	96	85	65	96	78	60	96	72	56	96	68	52	96	64	49	96	60	46	0	57	0	0
		6:12	26.6	Non-Exposed	96	96	96	96	96	96	96	96	96	96	96	91	96	94	86	96	89	81	96	85	77	96	81	73	96	74	67	96	68	62	96	64	58	96	60	54	94	57	50	92	54	47
				Exposed	96	93	96	96	87	96	96	82	96	96	77	96	96	73	96	92	70	96	88	67	96	85	64	96	78	60	96	72	56	96	68	52	96	64	49	96	60	46	0	57	0	0
		7:12	30.3	Non-Exposed	96	96	96	96	96	96	96	96	96	96	96	96	96	96	94	96	96	89	96	96	85	96	92	81	95	84	74	92	77	68	88	72	63	85	67	59	82	64	56	79	60	53
				Exposed	96	96	96	96	96	96	96	93	96	95	88	96	90	84	96	85	79	96	81	76	96	77	72	96	70	67	95	66	62	92	62	58	88	58	55	85	55	52	82	52	49	0
		8:12	33.7	Non-Exposed	96	96	96	96	96	96	96	96	96	96	96	96	96	96	93	96	96	89	96	96	84	96	92	80	96	84	74	93	77	68	89	71	63	86	67	59	83	63	56	79	60	52
				Exposed	96	96	96	96	96	96	96	93	96	95	88	96	90	83	96	85	79	96	81	75	96	77	72	96	70	67	96	66	62	93	61	58	89	58	55	86	55	52	83	52	49	0
		9:12	36.9	Non-Exposed	96	96	96	96	96	96	96	96	96	96	96	96	96	96	93	96	96	88	96	96	84	96	91	80	96	84	73	94	77	68	90	71	63	87	67	59	84	63	56	79	60	52
				Exposed	96	96	96	96	96	96	96	93	96	95	88	96	89	83	96	85	79	96	81	75	96	77	72	96	70	67	96	65	62	94	61	58	90	58	55	87	55	52	84	52	49	0
		10:12	39.8	Non-Exposed	96	96	96	96	96	96	96	96	96	96	96	96	96	96	93	96	96	88	96	95	84	96	91	80	96	83	73	95	77	68	91	71	63	88	67	59	83	63	56	79	60	52
				Exposed	96	96	96	96	96	96	96	92	96	94	87	96	89	83	96	85	79	96	80	75	96	76	72	96	70	66	96	65	62	95	61	58	91	58	55	88	54	52	83	52	49	0
		11:12	42.5	Non-Exposed	96	96	96	96	96	96	96	96	96	96	96	96	96	96	92	96	96	88	96	95	84	96	91	80	96	83	73	96	77	68	93	71	63	88	67	59	83	63	55	79	60	52
				Exposed	96	96	96	96	96	96	96	92	96	94	87	96	89	83	96	84	79	96	80	75	96	76	71	96	70	66	96	65	62	96	61	58	93	58	55	88	54	52	83	52	49	0
		12:12	45	Non-Exposed	96	96	96	96	96	96	96	96	96	96	96	96	96	96	92	96	96	88	96	95	83	96	91	80	96	83	73	96	77	68	93	71	63	88	67	59	83	63	55	79	60	52
				Exposed	96	96	96	96	96	96	96	92	96	94	87	96	89	82	96	84	78	96	80	75	96	76	71	96	70	66	96	65	62	96	61	58	93	58	55	88	54	52	83	52	49	0
	D	Flat	0	Non-Exposed	96	96	95	96	96	89	96	96	83	96	96	78	96	91	74	96	86	71	96	82	68	96	78	65	96	71	60	96	66	56	96	62	52	96	58	49	96	55	46	96	52	0
				Exposed	96	90	96	96	84	96	95	79	96	90	75	96	85	71	96	81	68	96	77	65	96	73	62	96	68	58	96	63	54	96	59	50	0	55	47	0	52	45	0	49	0	0
		1:12	4.8	Non-Exposed	96	96	94	96	96	88	96	96	83	96	95	78	96	90	74	96	86	70	96	82	67	96	78	65	96	71	60	96	66	56	96	62	52	96	58	49	96	55	46	96	52	0
				Exposed	96	89	96	96	84	96	95	79	96	90	75	96	85	71	96	81	68	96	77	65	96	73	62	96	67	58	96	63	54	96	59	50	0	55	47	0	52	45	0	49	0	0
		2:12	9.5	Non-Exposed	96	96	88	96	92	82	96	87	77	96	82	73	96	77	69	96	73	66	96	70	63	96	67	61	96	62	56	96	58	53	94	54	49	91	51	46	89	48	0	86	45	0
				Exposed	95	76	96	89	71	96	85	68	96	80	64	96	76	62	96	73	59	96	70	56	96	67	54	96	62	50	96	58	47	0	54	0	0	51	0	0	48	0	0	45	0	0
		3:12	14.0	Non-Exposed	96	96	87	96	92	82	96	86	77	96	81	72	96	77	69	96	73	66	96	69	63	96	67	61	96	62	56	94	58	52	92	54	49	89	51	46	87	48	0	84	45	0
				Exposed	94	76	96	89	71	96	84	67	96	80	64	96	76	61	96	72	59	96	69	56	96	67	54	96	62	50	96	58	47	0	54	0	0	51	0	0	48	0	0	45	0	0
		4:12	18.4	Non-Exposed	96	96	87	96	91	81	96	86	76	96	81	72	96	76	69	96	72	66	96	69	63	96	67	61	96	62	56	96	57	52	95	54	49	92	51	46	89	48	0	87	45	0
				Exposed	94	75	96	89	71	96	84	67	96	80	64	96	76	61	96	72	59	96	69	56	96	67	54	96	62	50	96	57	47	0	54	0	0	51	0	0	48	0	0	45	0	0
		5:12	22.6	Non-Exposed	96	96	96	96	96	92	96	96	87	96	90	82	96	85	77	96	81	73	96	77	70	96	73	66	96	68	61	96	63	56	95	59	52	92	55	49	90	52	46	87	50	43
				Exposed	96	84	96	96	79	96	96	74	96	93	70	96	89	67	96	85	64	96	81	62	96	77	59	96	71	55	96	66	51	96	62	48	95	58	45	0	55	0	0	52	0	0
		6:12	26.6	Non-Exposed	96	96	96	96	96	92	96	95	86	96	90	81	96	85	77	96	81	73	96	77	69	96	73	66	96	67	61	96	63	56	96	59	52	93	55	49	90	52	46	88	49	43
				Exposed	96	84	96	96	79	96	96	74	96	93	70	96	88	67	96	84	64	96	81	62	96	77	59	96	71	55	96	66	51	96	62	48	0	58	45	0	55	0	0	52	0	0
		7:12	30.3	Non-Exposed	96	96	96	96	96	96	96	96	95	96	96	89	96	96	85	96	92	80	96	87	76	95	83	73	91	76	67	87	70	62	84	66	58	80	62	54	77	58	51	73	55	48
				Exposed	96	95	96	96	89	96	91	84	96	86	80	96	81	76	96	77	72	96	73	69	96	70	66	95	65	61	91	60	57	87	57	54	84	53	50	80	50	48	0	48	45	0
		8:12	33.7	Non-Exposed	96	96	96	96	96	96	96	96	94	96	96	89	96	96	84	96	91	80	96	87	76	96	83	73	92	76	67	88	70	62	85	66	58	81	62	54	77	58	51	73	55	48
				Exposed	96	95	96	96	89	96	91	84	96	85	79	96	81	75	96	76	72	96	73	69	96	70	66	96	65	61	92	60	57	88	56	54	85	53	50	81	50	48	0	47	45	0
		9:12	36.9	Non-Exposed	96	96	96	96	96	96	96	96	94	96	96	89	96	96	84	96	91	80	96	87	76	96	83	72	93	76	67	89	70	62	85	66	58	81	62	54	77	58	51	73	55	48
				Exposed	96	94	96	96	89	96	90	84	96	85	79	96	80	75	96	76	71	96	72	69	96	69	66	96	64	61	93	60	57	89	56	53	85	53	50	81	50	48	0	47	45	0
		10:12	39.8	Non-Exposed	96	96	96	96	96	96	96	96	93	96	96	88	96	95	84	96	91	80	96	86	76	96	82	72	94	75	67	90	70	62	86	65	58	81	62	54	77	58	51	73	55	48
				Exposed	96	94	96	96	89	96	90	84	96	85	79	96	80	75	96	76	71	96	72	68	96	69	66	96	64	61	94	60	57	90	56	53	86	53	50	81	50	47	0	47	45	0
		11:12	42.5	Non-Exposed	96	96	96	96	96	96	96	96	93	96	96	88	96	95	84	96	90	79	96	86	76	96	82	72	95	75	67	91	70	62	86	65	58	81	62	54	77	58	51	72	55	48
				Exposed	96	94	96	95	88	96	90	83	96	85	79	96	80	75	96	76	71	96	72	68	96	69	66	96	64	61	95	60	57	91	56	53	86	53	50	81	50	47	0	47	45	0
		12:12	45	Non-Exposed	96	96	96	96	96	96	96	96	93	96	96	88	96	95	83	96	90	79	96	86	75	96	82	72	96	75	66	91	70	62	86	65	57	81	61	54	76	58	51	72	55	48
				Exposed	96	93	96	95	88	96	89	83	96	84	79	96	80	75	96	76	71	96	72	68	96	69	66	96	64	61	96	60	57	91	56	53	86	53	50	81	50	47	0	47	45	0

Tamarack 2.3 Rail – Gable Flush-Mount on 30 Foot Maximum Mean Roof Height – Landscape – Panel Width = 40 Inches or Less

Ground Snow Load	Exposure Category	Roof Pitch	Roof Angle	Wind Speed (mph)	95			100			105			110			115			120			125			130			140			150			160			170			180			190		
				Roof Area	1	2	3	1	2	3	1	2	3	1	2	3	1	2	3	1	2	3	1	2	3	1	2	3	1	2	3	1	2	3	1	2	3	1	2	3	1	2	3	1	2	3
15	B	Flat	0	Non-Exposed	96	96	96	96	96	96	96	96	96	96	96	96	96	96	96	96	96	96	96	96	92	96	96	87	96	96	80	96	89	73	96	83	68	96	77	64	96	72	60	96	68	57
				Exposed	96	96	96	96	96	96	96	96	96	96	96	96	96	96	96	96	92	96	96	87	96	96	83	96	91	76	96	84	70	96	78	65	96	72	61	96	68	58	96	64	55	96
		1:12	4.8	Non-Exposed	92	92	92	92	92	92	92	92	92	92	92	92	92	92	92	92	92	92	92	92	92	92	92	87	92	92	79	92	89	73	92	82	68	92	76	64	92	71	60	92	67	57
				Exposed	92	92	92	92	92	92	92	92	92	92	92	92	92	92	92	92	91	92	92	87	92	92	83	92	91	76	92	84	70	92	77	65	92	72	61	92	68	58	92	64	55	92
		2:12	9.5	Non-Exposed	89	89	89	89	89	89	89	89	89	89	89	89	89	89	89	89	89	89	89	89	85	89	89	81	89	83	74	89	76	68	89	70	64	89	66	60	89	62	56	87	59	53
				Exposed	89	89	89	89	89	89	89	89	89	89	87	89	89	82	89	89	78	89	89	74	89	88	70	89	81	65	89	75	61	89	70	57	89	66	53	89	62	50	89	59	48	0
		3:12	14.0	Non-Exposed	86	86	86	86	86	86	86	86	86	86	86	86	86	86	86	86	86	86	86	86	85	86	86	81	86	82	73	86	75	68	86	70	64	86	66	60	86	62	56	85	59	53
				Exposed	86	86	86	86	86	86	86	86	86	86	86	86	86	82	86	86	77	86	86	74	86	86	70	86	81	65	86	75	61	86	70	57	86	66	53	86	62	50	86	59	48	0
		4:12	18.4	Non-Exposed	90	90	90	90	90	90	90	90	90	90	90	90	90	90	90	90	90	89	90	90	85	90	90	80	90	82	73	90	75	68	90	70	63	90	65	60	90	62	56	89	58	53
				Exposed	90	90	90	90	90	90	90	90	90	90	86	90	90	81	90	90	77	90	90	73	90	88	70	90	81	65	90	75	61	90	70	57	90	65	53	90	62	50	90	58	48	0
		5:12	22.6	Non-Exposed	91	91	91	91	91	91	91	91	91	91	91	91	91	91	91	91	91	91	91	91	91	91	91	91	91	91	83	91	84	76	91	77	70	91	72	65	91	68	61	89	64	57
				Exposed	91	91	91	91	91	91	91	91	91	91	91	91	91	91	91	91	86	91	91	82	91	91	78	91	91	71	91	87	66	91	81	62	91	76	58	91	71	55	91	68	52	89
		6:12	26.6	Non-Exposed	92	92	92	92	92	92	92	92	92	92	92	92	92	92	92	92	92	92	92	92	92	92	92	91	92	91	83	92	84	76	92	77	70	92	72	65	92	68	61	91	64	57
				Exposed	92	92	92	92	92	92	92	92	92	92	92	92	92	90	92	92	86	92	92	81	92	92	78	92	92	71	92	87	66	92	81	62	92	76	58	92	71	55	92	67	52	91
		7:12	30.3	Non-Exposed	93	93	93	93	93	93	93	93	93	93	93	93	93	93	93	93	93	93	93	93	93	93	93	93	93	93	91	91	91	83	89	88	77	87	82	72	84	76	67	82	71	63
				Exposed	93	93	93	93	93	93	93	93	93	93	93	93	93	93	93	93	93	93	93	93	93	93	88	93	87	81	93	80	74	91	73	69	89	69	65	87	65	61	84	61	58	82
		8:12	33.7	Non-Exposed	95	95	95	95	95	95	95	95	95	95	95	95	95	95	95	95	95	95	95	95	95	95	95	95	95	95	90	93	93	83	90	88	77	88	81	71	86	76	67	83	71	63
				Exposed	95	95	95	95	95	95	95	95	95	95	95	95	95	95	95	95	95	95	95	92	95	95	88	95	87	81	95	79	74	93	73	69	90	69	65	88	65	61	86	61	58	83
		9:12	36.9	Non-Exposed	96	96	96	96	96	96	96	96	96	96	96	96	96	96	96	96	96	96	96	96	96	96	96	96	96	96	90	95	94	83	92	87	77	90	81	71	87	76	67	85	71	63
				Exposed	96	96	96	96	96	96	96	96	96	96	96	96	96	96	96	96	96	96	96	92	96	95	88	96	86	80	96	79	74	95	73	69	92	68	65	90	65	61	87	61	58	85
		10:12	39.8	Non-Exposed	96	96	96	96	96	96	96	96	96	96	96	96	96	96	96	96	96	96	96	96	96	96	96	96	96	96	90	96	94	82	94	87	76	91	81	71	89	76	67	86	71	63
				Exposed	96	96	96	96	96	96	96	96	96	96	96	96	96	96	96	96	96	96	96	92	96	94	88	96	86	80	96	79	74	96	73	69	94	68	65	91	65	61	89	61	58	86
		11:12	42.5	Non-Exposed	96	96	96	96	96	96	96	96	96	96	96	96	96	96	96	96	96	96	96	96	96	96	96	96	96	96	89	96	94	82	96	87	76	93	81	71	90	75	67	87	71	63
				Exposed	96	96	96	96	96	96	96	96	96	96	96	96	96	96	96	96	96	96	96	91	96	94	87	96	86	80	96	79	74	96	73	69	96	68	65	93	64	61	90	61	58	87
		12:12	45	Non-Exposed	96	96	96	96	96	96	96	96	96	96	96	96	96	96	96	96	96	96	96	96	96	96	96	96	96	96	89	96	93	82	96	87	76	95	81	71	92	75	67	89	71	63
				Exposed	96	96	96	96	96	96	96	96	96	96	96	96	96	96	96	96	96	96	96	91	96	94	87	96	86	80	96	79	74	96	73	69	96	68	65	95	64	61	92	61	58	89
	C	Flat	0	Non-Exposed	96	96	96	96	96	96	96	96	93	96	96	87	96	96	83	96	96	78	96	91	74	96	87	71	96	79	66	96	73	61	96	68	57	96	64	54	96	60	51	96	57	48
				Exposed	96	96	96	96	93	96	96	88	96	96	83	96	95	78	96	90	75	96	85	71	96	81	68	96	74	63	96	69	59	96	64	55	96	60	52	0	57	49	0	54	46	0
		1:12	4.8	Non-Exposed	92	92	92	92	92	92	92	92	92	92	92	87	92	92	82	92	92	78	92	90	74	92	86	71	92	79	65	92	72	61	92	68	57	92	64	54	92	60	51	92	57	48
				Exposed	92	92	92	92	92	92	92	87	92	92	83	92	92	78	92	89	74	92	85	71	92	81	68	92	74	63	92	69	59	92	64	55	92	60	52	0	57	49	0	54	46	0
		2:12	9.5	Non-Exposed	89	89	89	89	89	89	89	89	86	89	89	81	89	86	76	89	81	72	89	77	69	89	73	66	89	68	61	89	63	57	87	59	54	85	55	50	84	52	48	82	49	45
				Exposed	89	85	89	89	79	89	89	74	89	88	70	89	84	67	89	80	64	89	76	62	89	73	59	89	68	55	89	63	51	89	59	48	0	55	45	0	52	0	0	49	0	0
		3:12	14.0	Non-Exposed	86	86	86	86	86	86	86	86	86	86	86	81	86	85	76	86	81	72	86	77	69	86	73	66	86	67	61	86	63	57	85	59	54	83	55	50	81	52	47	80	49	45
				Exposed	86	84	86	86	79	86	86	74	86	86	70	86	84	67	86	80	64	86	76	61	86	73	59	86	67	55	86	63	51	86	59	48	0	55	45	0	52	0	0	49	0	0
		4:12	18.4	Non-Exposed	90	90	90	90	90	90	90	90	85	90	90	80	90	85	76	90	81	72	90	76	69	90	73	66	90	67	61	90	63	57	89	59	53	87	55	50	85	52	47	83	49	45
				Exposed	90	84	90	90	78	90	90	74	90	88	70	90	83	67	90	79	64	90	76	61	90	73	59	90	67	55	90	63	51	90	59	48	0	55	45	0	52	0	0	49	0	0
		5:12	22.6	Non-Exposed	91	91	91	91	91	91	91	91	91	91	91	91	91	91	86	91	90	81	91	85	77	91	81	73	91	74	67	91	69	62	89	64	58	87	60	54	86	57	50	84	54	47
				Exposed	91	91	91	91	88	91	91	82	91	91	78	91	91	74	91	91	70	91	89	67	91	85	65	91	78	60	91	72	56	91	68	52	89	64	49	87	60	46	0	57	0	0
		6:12	26.6	Non-Exposed	92	92	92	92	92	92	92	92	92	92	92	91	92	92	86	92	89	81	92	85	77	92	81	73	92	74	67	92	68	62	91	64	58	89	60	54	87	57	50	85	54	47
				Exposed	92	92	92	92	87	92	92	82	92	92	77	92	92	73	92	92	70	92	88	67	92	85	64	92	78	60	92	72	56	92	68	52	91	64	49	89	60	46	0	57	0	0
		7:12	30.3	Non-Exposed	93	93	93	93	93	93	93	93	93	93	93	93	93	93	93	93	93	89	92	92	85	90	90	81	88	84	74	85	77	68	82	72	63	79	67	59	77	64	56	74	60	53
				Exposed	93	93	93	93	93	93	93	93	93	93	88	93	90	84	93	85	79	93	81	76	92	77	72	90	70	67	88	66	62	85	62	58	82	58	55	79	55	52	77	52	49	0
		8:12	33.7	Non-Exposed	95	95	95	95	95	95	95	95	95	95	95	95	95	95	93	95	95	89	93	93	84	92	92	80	89	84	74	86	77	68	83	71	63	81	67	59	78	63	56	75	60	52
				Exposed	95	95	95	95	95	95	95	93	95	95	88	95	90	83	95	85	79	95	81	75	93	77	72	92	70	67	89	66	62	86	61	58	83	58	55	81	55	52	78	52	49	0
		9:12	36.9	Non-Exposed	96	96	96	96	96	96	96	96	96	96	96	96	96	96	93	96	96	88	95	95	84	94	91	80	91	84	73	88	77	68	85	71	63	82	67	59	79	63	56	76	60	52
				Exposed	96	96	96	96	96	96	96	93	96	95	88	96	89	83	96	85	79	96	81	75	95	77	72	94	70	67	91	65	62	88	61	58	85	58	55	82	55	52	79	52	49	0
		10:12	39.8	Non-Exposed	96	96	96	96	96	96	96	96	96	96	96	96	96	96	93	96	96	88	96	95	84	96	91	80	92	83	73	89	77	68	86	71	63	83	67	59	80	63	56	77	60	52
				Exposed	96	96	96	96	96	96	96	92	96	94	87	96	89	83	96	85	79	96	80	75	96	76	72	96	70	66	92	65	62	89	61	58	86	58	55	83	54	52	80	52	49	0
		11:12	42.5	Non-Exposed	96	96	96	96	96	96	96	96	96	96	96	96	96	96	92	96	96	88	96	95	84	96	91	80	94	83	73	91	77	68	88	71	63	84	67	59	81	63	55	78	60	52
				Exposed	96	96	96	96	96	96	96	92	96	94	87	96	89	83	96	84	79	96	80	75	96	76	71	96	70	66	94	65	62	91	61	58	88	58	55	84	54	52	81	52	49	0
		12:12	45	Non-Exposed	96	96	96	96	96	96	96	96	96	96	96	96	96	96	92	96	96	88	96	95	83	96	91	80	96	83	73	93	77	68	89	71	63	86	67	59	83	63	55	79	60	52
				Exposed	96	96	96	96	96	96	96	92	96	94	87	96	89	82	96	84	78	96	80	75	96	76	71	96	70	66	96	65	62	93	61	58	89	58	55	86	54	52	83	52	49	0
	D	Flat	0	Non-Exposed	96	96	95	96	96	89	96	96	83	96	96	78	96	91	74	96	86	71	96	82	68	96	78	65	96	71	60	96	66	56	96	62	52	96	58	49	96	55	46	96	52	0
				Exposed	96	90	96	96	84	96	95	79	96	90	75	96	85	71	96	81	68	96	77	65	96	73	62	96	68	58	96	63	54	96	59	50	0	55	47	0	52	45	0	49	0	0
		1:12	4.8	Non-Exposed	92	92	92	92	92	88	92	92	83	92	92	78	92	90	74	92	86	70	92	82	67	92	78	65	92	71	60	92	66	56	92	62	52	92	58	49	92	55	46	92	52	0
				Exposed	92	89	92	92	84	92	92	79	92	90	75	92	85	71	92	81	68	92	77	65	92	73	62	92	67	58	92	63	54	92	59	50	0	55	47	0	52	45	0	49	0	0
		2:12	9.5	Non-Exposed	89	89	88	89	89	82	89	87	77	89	82	73	89	77	69	89	73	66	89	70	63	89	67	61	89	62	56	87	58	53	85	54	49	83	51	46	81	48	0	79	45	0
				Exposed	89	76	89	89	71	89	85	68	89	80	64	89	76	62	89	73	59	89	70	56	89	67	54	89	62	50	89	58	47	0	54	0	0	51	0	0	48	0	0	45	0	0
		3:12	14.0	Non-Exposed	86	86	86	86	86	82	86	86	77	86	81	72	86	77	69	86	73	66	86	69	63	86	67	61	86	62	56	84	58	52	82	54	49	80	51	46	79	48	0	77	45	0
				Exposed	86	76	86	86	71	86	84	67	86	80	64	86	76	61	86	72	59	86	69	56	86	67	54	86	62	50	86	58	47	0	54	0	0	51	0	0	48	0	0	45	0	0
		4:12	18.4	Non-Exposed	90	90	87	90	90	81	90	86	76	90	81	72	90	76	69	90	72	66	90	69	63	90	67	61	90	62	56	88	57	52	86	54	49	84	51	46	82	48	0	80	45	0
				Exposed	90	75	90	89	71	90	84	67	90	80	64	90	76	61	90	72	59	90	69	56	90	67	54	90	62	50	90	57	47	0	54	0	0	51	0	0	48	0	0	45	0	0
		5:12	22.6	Non-Exposed	91	91	91	91	91	91	91	91	87	91	90	82	91	85	77	91	81	73	91	77	70	91	73	66	91	68	61	89	63	56	87	59	52	85	55	49	82	52	46	80	50	43
				Exposed	91	84	91	91	79	91	91	74	91	91	70	91	89	67	91	85	64	91	81	62	91	77	59	91	71	55	91	66	51	89	62	48	87	58	45	0	55	0	0	52	0	0
		6:12	26.6	Non-Exposed	92	92	92	92	92	92	92	92	86	92	90	81	92	85	77	92	81	73	92	77	69	92	73	66	92	67	61	90	63	56	88	59	52	86	55	49	83	52	46	81	49	43
				Exposed	92	84	92	92	79	92	92	74	92	92	70	92	88	67	92	84	64	92	81	62	92	77	59	92	71	55	92	66	51	90	62	48	0	58	45	0	55	0	0	52	0	0
		7:12	30.3	Non-Exposed	93	93	93	93	93	93	93	93	93	93	93	89	92	92	85	90	90	80	89	87	76	87	83	73	84	76	67	81	70	62	78	66	58	76	62	54	73	58	51	70	55	48
				Exposed	93	93	93	93	89	93	91	84	93	86	80	93	81	76	92	77	72	90	73	69	89	70	66	87	65	61	84	60	57	81	57	54	78	53	50	76	50	48	0	48	45	0
		8:12	33.7	Non-Exposed	95	95	95	95	95	95	95	95	94	95	95	89	93	93	84	92	91	80	90	87	76	89	83	73	86	76	67	82	70	62	79	66	58	77	62	54	74	58	51	71	55	48
				Exposed	95	95	95	95	89	95	91	84	95	85	79	95	81	75	93	76	72	92	73	69	90	70	66	89	65	61	86	60	57	82	56	54	79	53	50	77	50	48	0	47	45	0
		9:12	36.9	Non-Exposed	96	96	96	96	96	96	96	96	94	96	96	89	95	95	84	94	91	80	92	87	76	90	83	72	87	76	67	84	70	62	81	66	58	78	62	54	75	58	51	72	55	48
				Exposed	96	94	96	96	89	96	90	84	96	85	79	96	80	75	95	76	71	94	72	69	92	69	66	90	64	61	87	60	57	84	56	53	81	53	50	78	50	48	0	47	45	0
		10:12	39.8	Non-Exposed	96	96	96	96	96	96	96	96	93	96	96	88	96	95	84	96	91	80	94	86	76	92	82	72	89	75	67	85	70	62	82	65	58	79	62	54	76	58	51	73	55	48
				Exposed	96	94	96	96	89	96	90	84	96	85	79	96	80	75	96	76	71	96	72	68	94	69	66	92	64	61	89	60	57	85	56	53	82	53	50	79	50	47	0	47	45	0
		11:12	42.5	Non-Exposed	96	96	96	96	96	96	96	96	93	96	96	88	96	95	84	96	90	79	96	86	76	94	82	72	90	75	67	87	70	62	83	65	58	80	62	54	77	58	51	72	55	48
				Exposed	96	94	96	95	88	96	90	83	96	85	79	96	80	75	96	76	71	96	72	68	96	69	66	94	64	61	90	60	57	87	56	53	83	53	50	80	50	47	0	47	45	0
		12:12	45	Non-Exposed	96	96	96	96	96	96	96	96	93	96	96	88	96	95	83	96	90	79	96	86	75	96	82	72	92	75	66	88	70	62	84	65	57	81	61	54	76	58	51	72	55	48
				Exposed	96	93	96	95	88	96	89	83	96	84	79	96	80	75	96	76	71	96	72	68	96	69	66	96	64	61	92	60	57	88	56	53	84	53	50	81	50	47	0	47	45	0

Tamarack 2.3 Rail – Gable Flush-Mount on 30 Foot Maximum Mean Roof Height – Landscape – Panel Width = 40 Inches or Less

Ground Snow Load	Exposure Category	Roof Pitch	Roof Angle	Wind Speed (mph)	95			100			105			110			115			120			125			130			140			150			160			170			180			190		
				Roof Area	1	2	3	1	2	3	1	2	3	1	2	3	1	2	3	1	2	3	1	2	3	1	2	3	1	2	3	1	2	3	1	2	3	1	2	3	1	2	3	1	2	3
20	B	Flat	0	Non-Exposed	89	89	89	89	89	89	89	89	89	89	89	89	89	89	89	89	89	89	89	89	89	89	89	87	89	89	80	89	89	73	89	83	68	89	77	64	89	72	60	89	68	57
				Exposed	89	89	89	89	89	89	89	89	89	89	89	89	89	89	89	89	89	89	89	87	89	89	83	89	89	76	89	84	70	89	78	65	89	72	61	89	68	58	89	64	55	89
		1:12	4.8	Non-Exposed	84	84	84	84	84	84	84	84	84	84	84	84	84	84	84	84	84	84	84	84	84	84	84	84	84	84	79	84	84	73	84	82	68	84	76	64	84	71	60	84	67	57
				Exposed	84	84	84	84	84	84	84	84	84	84	84	84	84	84	84	84	84	84	84	84	84	84	83	84	84	76	84	84	70	84	77	65	84	72	61	84	68	58	84	64	55	84
		2:12	9.5	Non-Exposed	81	81	81	81	81	81	81	81	81	81	81	81	81	81	81	81	81	81	81	81	81	81	81	81	81	81	74	81	76	68	81	70	64	81	66	60	81	62	56	80	59	53
				Exposed	81	81	81	81	81	81	81	81	81	81	81	81	81	81	81	81	78	81	81	74	81	81	70	81	81	65	81	75	61	81	70	57	81	66	53	81	62	50	81	59	48	0
		3:12	14.0	Non-Exposed	79	79	79	79	79	79	79	79	79	79	79	79	79	79	79	79	79	79	79	79	79	79	79	79	79	79	73	79	75	68	79	70	64	79	66	60	78	62	56	77	59	53
				Exposed	79	79	79	79	79	79	79	79	79	79	79	79	79	79	79	79	77	79	79	74	79	79	70	79	79	65	79	75	61	79	70	57	79	66	53	79	62	50	78	59	48	0
		4:12	18.4	Non-Exposed	83	83	83	83	83	83	83	83	83	83	83	83	83	83	83	83	83	83	83	83	83	83	83	80	83	82	73	83	75	68	83	70	63	83	65	60	83	62	56	81	58	53
				Exposed	83	83	83	83	83	83	83	83	83	83	83	83	83	81	83	83	77	83	83	73	83	83	70	83	81	65	83	75	61	83	70	57	83	65	53	83	62	50	83	58	48	0
		5:12	22.6	Non-Exposed	84	84	84	84	84	84	84	84	84	84	84	84	84	84	84	84	84	84	84	84	84	84	84	83	84	84	83	84	84	76	84	77	70	84	72	65	84	68	61	82	64	57
				Exposed	84	84	84	84	84	84	84	84	84	84	84	84	84	84	84	84	84	84	84	82	84	84	78	84	84	71	84	84	66	84	81	62	84	76	58	84	71	55	84	68	52	82
		6:12	26.6	Non-Exposed	85	85	85	85	85	85	85	85	85	85	85	85	85	85	85	85	85	85	85	85	85	85	85	85	85	85	83	85	84	76	85	77	70	85	72	65	85	68	61	84	64	57
				Exposed	85	85	85	85	85	85	85	85	85	85	85	85	85	85	85	85	85	85	85	81	85	85	78	85	85	71	85	85	66	85	81	62	85	76	58	85	71	55	85	67	52	84
		7:12	30.3	Non-Exposed	87	87	87	87	87	87	87	87	87	87	87	87	87	87	87	87	87	87	87	87	87	87	87	87	86	86	86	85	85	83	83	83	77	81	81	72	79	76	67	77	71	63
				Exposed	87	87	87	87	87	87	87	87	87	87	87	87	87	87	87	87	87	87	87	87	87	87	87	87	86	81	86	80	74	85	73	69	83	69	65	81	65	61	79	61	58	77
		8:12	33.7	Non-Exposed	89	89	89	89	89	89	89	89	89	89	89	89	89	89	89	89	89	89	89	89	89	89	89	89	89	89	89	87	87	83	85	85	77	82	81	71	80	76	67	78	71	63
				Exposed	89	89	89	89	89	89	89	89	89	89	89	89	89	89	89	89	89	89	89	89	89	89	88	89	87	81	89	79	74	87	73	69	85	69	65	82	65	61	80	61	58	78
		9:12	36.9	Non-Exposed	91	91	91	91	91	91	91	91	91	91	91	91	91	91	91	91	91	91	91	91	91	91	91	91	91	91	90	89	89	83	86	86	77	84	81	71	82	76	67	80	71	63
				Exposed	91	91	91	91	91	91	91	91	91	91	91	91	91	91	91	91	91	91	91	91	91	91	88	91	86	80	91	79	74	89	73	69	86	68	65	84	65	61	82	61	58	80
		10:12	39.8	Non-Exposed	93	93	93	93	93	93	93	93	93	93	93	93	93	93	93	93	93	93	93	93	93	93	93	93	93	93	90	91	91	82	89	87	76	86	81	71	84	76	67	82	71	63
				Exposed	93	93	93	93	93	93	93	93	93	93	93	93	93	93	93	93	93	93	93	92	93	93	88	93	86	80	93	79	74	91	73	69	89	68	65	86	65	61	84	61	58	82
		11:12	42.5	Non-Exposed	95	95	95	95	95	95	95	95	95	95	95	95	95	95	95	95	95	95	95	95	95	95	95	95	95	95	89	93	93	82	91	87	76	88	81	71	86	75	67	83	71	63
				Exposed	95	95	95	95	95	95	95	95	95	95	95	95	95	95	95	95	95	95	95	91	95	94	87	95	86	80	95	79	74	93	73	69	91	68	65	88	64	61	86	61	58	83
		12:12	45	Non-Exposed	96	96	96	96	96	96	96	96	96	96	96	96	96	96	96	96	96	96	96	96	96	96	96	96	96	96	89	95	93	82	93	87	76	90	81	71	88	75	67	85	71	63
				Exposed	96	96	96	96	96	96	96	96	96	96	96	96	96	96	96	96	96	96	96	91	96	94	87	96	86	80	96	79	74	95	73	69	93	68	65	90	64	61	88	61	58	85
	C	Flat	0	Non-Exposed	89	89	89	89	89	89	89	89	89	89	89	87	89	89	83	89	89	78	89	89	74	89	87	71	89	79	66	89	73	61	89	68	57	89	64	54	89	60	51	89	57	48
				Exposed	89	89	89	89	89	89	89	88	89	89	83	89	89	78	89	89	75	89	85	71	89	81	68	89	74	63	89	69	59	89	64	55	89	60	52	0	57	49	0	54	46	0
		1:12	4.8	Non-Exposed	84	84	84	84	84	84	84	84	84	84	84	84	84	84	82	84	84	78	84	84	74	84	84	71	84	79	65	84	72	61	84	68	57	84	64	54	84	60	51	84	57	48
				Exposed	84	84	84	84	84	84	84	84	84	84	83	84	84	78	84	84	74	84	84	71	84	81	68	84	74	63	84	69	59	84	64	55	84	60	52	0	57	49	0	54	46	0
		2:12	9.5	Non-Exposed	81	81	81	81	81	81	81	81	81	81	81	81	81	81	76	81	81	72	81	77	69	81	73	66	81	68	61	81	63	57	80	59	54	78	55	50	77	52	48	75	49	45
				Exposed	81	81	81	81	79	81	81	74	81	81	70	81	81	67	81	80	64	81	76	62	81	73	59	81	68	55	81	63	51	81	59	48	0	55	45	0	52	0	0	49	0	0
		3:12	14.0	Non-Exposed	79	79	79	79	79	79	79	79	79	79	79	79	79	79	76	79	79	72	79	77	69	79	73	66	79	67	61	79	63	57	77	59	54	76	55	50	75	52	47	73	49	45
				Exposed	79	79	79	79	79	79	79	74	79	79	70	79	79	67	79	79	64	79	76	61	79	73	59	79	67	55	79	63	51	79	59	48	0	55	45	0	52	0	0	49	0	0
		4:12	18.4	Non-Exposed	83	83	83	83	83	83	83	83	83	83	83	80	83	83	76	83	81	72	83	76	69	83	73	66	83	67	61	83	63	57	82	59	53	80	55	50	78	52	47	77	49	45
				Exposed	83	83	83	83	78	83	83	74	83	83	70	83	83	67	83	79	64	83	76	61	83	73	59	83	67	55	83	63	51	83	59	48	0	55	45	0	52	0	0	49	0	0
		5:12	22.6	Non-Exposed	84	84	84	84	84	84	84	84	84	84	84	84	84	84	84	84	84	81	84	84	77	84	81	73	84	74	67	84	69	62	82	64	58	81	60	54	79	57	50	78	54	47
				Exposed	84	84	84	84	84	84	84	82	84	84	78	84	84	74	84	84	70	84	84	67	84	84	65	84	78	60	84	72	56	84	68	52	82	64	49	81	60	46	0	57	0	0
		6:12	26.6	Non-Exposed	85	85	85	85	85	85	85	85	85	85	85	85	85	85	85	85	85	81	85	85	77	85	81	73	85	74	67	85	68	62	84	64	58	82	60	54	80	57	50	79	54	47
				Exposed	85	85	85	85	85	85	85	82	85	85	77	85	85	73	85	85	70	85	85	67	85	85	64	85	78	60	85	72	56	85	68	52	84	64	49	82	60	46	0	57	0	0
		7:12	30.3	Non-Exposed	87	87	87	87	87	87	87	87	87	87	87	87	87	87	87	86	86	86	85	85	85	84	84	81	82	82	74	79	77	68	77	72	63	75	67	59	73	64	56	71	60	53
				Exposed	87	87	87	87	87	87	87	87	87	87	87	87	87	84	87	85	79	86	81	76	85	77	72	84	70	67	82	66	62	79	62	58	77	58	55	75	55	52	73	52	49	0
		8:12	33.7	Non-Exposed	89	89	89	89	89	89	89	89	89	89	89	89	89	89	89	88	88	88	87	87	84	86	86	80	83	83	74	81	77	68	79	71	63	76	67	59	74	63	56	72	60	52
				Exposed	89	89	89	89	89	89	89	89	89	89	88	89	89	83	89	85	79	88	81	75	87	77	72	86	70	67	83	66	62	81	61	58	79	58	55	76	55	52	74	52	49	0
		9:12	36.9	Non-Exposed	91	91	91	91	91	91	91	91	91	91	91	91	91	91	91	90	90	88	89	89	84	88	88	80	85	84	73	83	77	68	80	71	63	78	67	59	75	63	56	73	60	52
				Exposed	91	91	91	91	91	91	91	91	91	91	88	91	89	83	91	85	79	90	81	75	89	77	72	88	70	67	85	65	62	83	61	58	80	58	55	78	55	52	75	52	49	0
		10:12	39.8	Non-Exposed	93	93	93	93	93	93	93	93	93	93	93	93	93	93	93	93	93	88	91	91	84	90	90	80	87	83	73	85	77	68	82	71	63	79	67	59	77	63	56	74	60	52
				Exposed	93	93	93	93	93	93	93	92	93	93	87	93	89	83	93	85	79	93	80	75	91	76	72	90	70	66	87	65	62	85	61	58	82	58	55	79	54	52	77	52	49	0
		11:12	42.5	Non-Exposed	95	95	95	95	95	95	95	95	95	95	95	95	95	95	92	95	95	88	94	94	84	92	91	80	89	83	73	86	77	68	84	71	63	81	67	59	78	63	55	75	60	52
				Exposed	95	95	95	95	95	95	95	92	95	94	87	95	89	83	95	84	79	95	80	75	94	76	71	92	70	66	89	65	62	86	61	58	84	58	55	81	54	52	78	52	49	0
		12:12	45	Non-Exposed	96	96	96	96	96	96	96	96	96	96	96	96	96	96	92	96	96	88	96	95	83	94	91	80	91	83	73	88	77	68	85	71	63	82	67	59	79	63	55	77	60	52
				Exposed	96	96	96	96	96	96	96	92	96	94	87	96	89	82	96	84	78	96	80	75	96	76	71	94	70	66	91	65	62	88	61	58	85	58	55	82	54	52	79	52	49	0
	D	Flat	0	Non-Exposed	89	89	89	89	89	89	89	89	83	89	89	78	89	89	74	89	86	71	89	82	68	89	78	65	89	71	60	89	66	56	89	62	52	89	58	49	89	55	46	88	52	0
				Exposed	89	89	89	89	84	89	89	79	89	89	75	89	85	71	89	81	68	89	77	65	89	73	62	89	68	58	89	63	54	89	59	50	0	55	47	0	52	45	0	49	0	0
		1:12	4.8	Non-Exposed	84	84	84	84	84	84	84	84	83	84	84	78	84	84	74	84	84	70	84	82	67	84	78	65	84	71	60	84	66	56	84	62	52	84	58	49	84	55	46	84	52	0
				Exposed	84	84	84	84	84	84	84	79	84	84	75	84	84	71	84	81	68	84	77	65	84	73	62	84	67	58	84	63	54	84	59	50	0	55	47	0	52	45	0	49	0	0
		2:12	9.5	Non-Exposed	81	81	81	81	81	81	81	81	77	81	81	73	81	77	69	81	73	66	81	70	63	81	67	61	81	62	56	79	58	53	78	54	49	76	51	46	74	48	0	73	45	0
				Exposed	81	76	81	81	71	81	81	68	81	80	64	81	76	62	81	73	59	81	70	56	81	67	54	81	62	50	81	58	47	0	54	0	0	51	0	0	48	0	0	45	0	0
		3:12	14.0	Non-Exposed	79	79	79	79	79	79	79	79	77	79	79	72	79	77	69	79	73	66	79	69	63	79	67	61	78	62	56	77	58	52	75	54	49	74	51	46	72	48	0	71	45	0
				Exposed	79	76	79	79	71	79	79	67	79	79	64	79	76	61	79	72	59	79	69	56	79	67	54	79	62	50	78	58	47	0	54	0	0	51	0	0	48	0	0	45	0	0
		4:12	18.4	Non-Exposed	83	83	83	83	83	81	83	83	76	83	81	72	83	76	69	83	72	66	83	69	63	83	67	61	83	62	56	81	57	52	79	54	49	78	51	46	76	48	0	74	45	0
				Exposed	83	75	83	83	71	83	83	67	83	80	64	83	76	61	83	72	59	83	69	56	83	67	54	83	62	50	83	57	47	0	54	0	0	51	0	0	48	0	0	45	0	0
		5:12	22.6	Non-Exposed	84	84	84	84	84	84	84	84	84	84	84	82	84	84	77	84	84	81	73	84	77	70	84	73	66	84	68	61	82	63	56	80	59	52	78	55	49	77	52	46	75	50	43
				Exposed	84	84	84	84	79	84	84	74	84	84	70	84	84	67	84	84	64	84	81	62	84	77	59	84	71	55	84	66	51	82	62	48	80	58	45	0	55	0	0	52	0	0
		6:12	26.6	Non-Exposed	85	85	85	85	85	85	85	85	85	85	85	81	85	85	77	85	81	73	85	77	69	85	73	66	85	67	61	83	63	56	81	59	52	80	55	49	78	52	46	76	49	43
				Exposed	85	84	85	85	79	85	85	74	85	85	70	85	85	67	85	84	64	85	81	62	85	77	59	85	71	55	85	66	51	83	62	48	0	58	45	0	55	0	0	52	0	0
		7:12	30.3	Non-Exposed	87	87	87	87	87	87	87	87	87	86	86	86	85	85	85	84	84	80	83	83	76	81	81	73	79	76	67	76	70	62	74	66	58	72	62	54	69	58	51	67	55	48
				Exposed	87	87	87	87	87	87	87	84	87	86	80	86	81	76	85	77	72	84	73	69	83	70	66	81	65	61	79	60	57	76	57	54	74	53	50	72	50	48	0	48	45	0
		8:12	33.7	Non-Exposed	89	89	89	89	89	89	89	89	89	88	88	88	87	87	84	86	86	80	84	84	76	83	83	73	80	76	67	78	70	62	75	66	58	73	62	54	70	58	51	68	55	48
				Exposed	89	89	89	89	89	89	89	84	89	85	79	88	81	75	87	76	72	86	73	69	84	70	66	83	65	61	80	60	57	78	56	54	75	53	50	73	50	48	0	47	45	0
		9:12	36.9	Non-Exposed	91	91	91	91	91	91	91	91	91	90	90	89	89	89	84	88	88	80	86	86	76	85	83	72	82	76	67	79	70	62	77	66	58	74	62	54	71	58	51	69	55	48
				Exposed	91	91	91	91	89	91	90	84	91	85	79	90	80	75	89	76	71	88	72	69	86	69	66	85	64	61	82	60	57	79	56	53	77	53	50	74	50	48	0	47	45	0
		10:12	39.8	Non-Exposed	93	93	93	93	93	93	93	93	93	93	93	88	91	91	84	90	90	80	88	86	76	87	82	72	84	75	67	81	70	62	78	65	58	75	62	54	73	58	51	70	55	48
				Exposed	93	93	93	93	89	93	90	84	93	85	79	93	80	75	91	76	71	90	72	68	88	69	66	87	64	61	84	60	57	81	56	53	78	53	50	75	50	47	0	47	45	0
		11:12	42.5	Non-Exposed	95	95	95	95	95	95	95	95	93	95	95	88	94	94	84	92	90	79	90	86	76	89	82	72	86	75	67	83	70	62	80	65	58	77	62	54	74	58	51	71	55	48
				Exposed	95	94	95	95	88	95	90	83	95	85	79	95	80	75	94	76	71	92	72	68	90	69	66	89	64	61	86	60	57	83	56	53	80	53	50	77	50	47	0	47	45	0
		12:12	45	Non-Exposed	96	96	96	96	96	96	96	96	93	96	96	88	96	95	83	94	90	79	93	86	75	91	82	72	88	75	66	84	70	62	81	65	57	78	61	54	75	58	51	72	55	48
				Exposed	96	93	96	95	88	96	89	83	96	84	79	96	80	75	96	76	71	94	72	68	93	69	66	91	64	61	88	60	57	84	56	53	81	53	50	78	50	47	0	47	45	0

Tamarack 2.3 Rail – Gable Flush-Mount on 30 Foot Maximum Mean Roof Height – Landscape – Panel Width = 40 Inches or Less

Ground Snow Load	Exposure Category	Roof Pitch	Roof Angle	Wind Speed (mph)	95			100			105			110			115			120			125			130			140			150			160			170			180			190		
				Roof Area	1	2	3	1	2	3	1	2	3	1	2	3	1	2	3	1	2	3	1	2	3	1	2	3	1	2	3	1	2	3	1	2	3	1	2	3	1	2	3	1	2	3
25	B	Flat	0	Non-Exposed	87	87	87	87	87	87	87	87	87	87	87	87	87	87	87	87	87	87	87	87	87	87	87	87	87	87	80	87	87	73	87	83	68	87	77	64	87	72	60	87	68	57
				Exposed	87	87	87	87	87	87	87	87	87	87	87	87	87	87	87	87	87	87	87	87	87	87	83	87	87	76	87	84	70	87	78	65	87	72	61	87	68	58	87	64	55	87
		1:12	4.8	Non-Exposed	83	83	83	83	83	83	83	83	83	83	83	83	83	83	83	83	83	83	83	83	83	83	83	83	83	83	79	83	83	73	83	82	68	83	76	64	83	71	60	83	67	57
				Exposed	83	83	83	83	83	83	83	83	83	83	83	83	83	83	83	83	83	83	83	83	83	83	83	83	83	76	83	83	70	83	77	65	83	72	61	83	68	58	83	64	55	83
		2:12	9.5	Non-Exposed	80	80	80	80	80	80	80	80	80	80	80	80	80	80	80	80	80	80	80	80	80	80	80	80	80	80	74	80	76	68	80	70	64	80	66	60	79	62	56	78	59	53
				Exposed	80	80	80	80	80	80	80	80	80	80	80	80	80	80	80	80	78	80	80	74	80	80	70	80	80	65	80	75	61	80	70	57	80	66	53	80	62	50	79	59	48	0
		3:12	14.0	Non-Exposed	77	77	77	77	77	77	77	77	77	77	77	77	77	77	77	77	77	77	77	77	77	77	77	77	77	77	73	77	75	68	77	70	64	77	66	60	77	62	56	76	59	53
				Exposed	77	77	77	77	77	77	77	77	77	77	77	77	77	77	77	77	77	77	77	74	77	77	70	77	77	65	77	75	61	77	70	57	77	66	53	77	62	50	77	59	48	0
		4:12	18.4	Non-Exposed	77	77	77	77	77	77	77	77	77	77	77	77	77	77	77	77	77	77	77	77	77	77	77	77	77	77	73	77	75	68	77	70	63	77	65	60	77	62	56	76	58	53
				Exposed	77	77	77	77	77	77	77	77	77	77	77	77	77	77	77	77	77	77	77	73	77	77	70	77	77	65	77	75	61	77	70	57	77	65	53	77	62	50	77	58	48	0
		5:12	22.6	Non-Exposed	78	78	78	78	78	78	78	78	78	78	78	78	78	78	78	78	78	78	78	78	78	78	78	78	78	78	78	78	78	76	78	77	70	78	72	65	78	68	61	77	64	57
				Exposed	78	78	78	78	78	78	78	78	78	78	78	78	78	78	78	78	78	78	78	78	78	78	78	78	78	71	78	78	66	78	78	62	78	76	58	78	71	55	78	68	52	77
		6:12	26.6	Non-Exposed	80	80	80	80	80	80	80	80	80	80	80	80	80	80	80	80	80	80	80	80	80	80	80	80	80	80	80	80	80	76	80	77	70	80	72	65	79	68	61	78	64	57
				Exposed	80	80	80	80	80	80	80	80	80	80	80	80	80	80	80	80	78	80	80	71	80	80	66	80	80	62	80	76	58	80	71	55	79	67	52	78	64	49	77	60	46	0
		7:12	30.3	Non-Exposed	81	81	81	81	81	81	81	81	81	81	81	81	81	81	81	81	81	81	81	81	81	81	81	81	81	81	81	79	79	79	78	78	77	76	76	72	74	74	67	73	71	63
				Exposed	81	81	81	81	81	81	81	81	81	81	81	81	81	81	81	81	81	81	81	81	81	81	81	81	81	81	81	79	74	79	73	69	78	69	65	76	65	61	74	61	58	73
		8:12	33.7	Non-Exposed	83	83	83	83	83	83	83	83	83	83	83	83	83	83	83	83	83	83	83	83	83	83	83	83	83	83	83	81	81	81	80	80	77	78	78	71	76	76	67	74	71	63
				Exposed	83	83	83	83	83	83	83	83	83	83	83	83	83	83	83	83	83	83	83	83	83	83	83	83	83	81	83	79	74	81	73	69	80	69	65	78	65	61	76	61	58	74
		9:12	36.9	Non-Exposed	86	86	86	86	86	86	86	86	86	86	86	86	86	86	86	86	86	86	86	86	86	86	86	86	85	85	85	84	84	83	82	82	77	80	80	71	78	76	67	76	71	63
				Exposed	86	86	86	86	86	86	86	86	86	86	86	86	86	86	86	86	86	86	86	86	86	86	86	86	85	80	85	79	74	84	73	69	82	68	65	80	65	61	78	61	58	76
		10:12	39.8	Non-Exposed	88	88	88	88	88	88	88	88	88	88	88	88	88	88	88	88	88	88	88	88	88	88	88	88	88	88	88	86	86	82	84	84	76	82	81	71	80	76	67	78	71	63
				Exposed	88	88	88	88	88	88	88	88	88	88	88	88	88	88	88	88	88	88	88	88	88	88	88	88	86	80	88	79	74	86	73	69	84	68	65	82	65	61	80	61	58	78
		11:12	42.5	Non-Exposed	91	91	91	91	91	91	91	91	91	91	91	91	91	91	91	91	91	91	91	91	91	91	91	91	90	90	89	88	88	82	86	86	76	84	81	71	82	75	67	80	71	63
				Exposed	91	91	91	91	91	91	91	91	91	91	91	91	91	91	91	91	91	91	91	91	91	91	87	91	86	80	90	79	74	88	73	69	86	68	65	84	64	61	82	61	58	80
		12:12	45	Non-Exposed	93	93	93	93	93	93	93	93	93	93	93	93	93	93	93	93	93	93	93	93	93	93	93	93	93	93	89	91	91	82	89	87	76	86	81	71	84	75	67	82	71	63
				Exposed	93	93	93	93	93	93	93	93	93	93	93	93	93	93	93	93	93	93	93	91	93	93	87	93	86	80	93	79	74	91	73	69	89	68	65	86	64	61	84	61	58	82
	C	Flat	0	Non-Exposed	87	87	87	87	87	87	87	87	87	87	87	87	87	87	83	87	87	78	87	87	74	87	87	71	87	79	66	87	73	61	87	68	57	87	64	54	87	60	51	87	57	48
				Exposed	87	87	87	87	87	87	87	87	87	87	83	87	87	78	87	87	75	87	85	71	87	81	68	87	74	63	87	69	59	87	64	55	87	60	52	0	57	49	0	54	46	0
		1:12	4.8	Non-Exposed	83	83	83	83	83	83	83	83	83	83	83	83	83	82	83	83	83	78	83	83	74	83	83	71	83	79	65	83	72	61	83	68	57	83	64	54	83	60	51	83	57	48
				Exposed	83	83	83	83	83	83	83	83	83	83	83	83	83	78	83	83	74	83	83	71	83	81	68	83	74	63	83	69	59	83	64	55	83	60	52	0	57	49	0	54	46	0
		2:12	9.5	Non-Exposed	80	80	80	80	80	80	80	80	80	80	80	80	80	76	80	80	80	72	80	77	69	80	73	66	80	68	61	80	63	57	78	59	54	77	55	50	76	52	48	74	49	45
				Exposed	80	80	80	80	79	80	80	74	80	80	70	80	80	67	80	80	64	80	76	62	80	73	59	80	68	55	80	63	51	80	59	48	0	55	45	0	52	0	0	49	0	0
		3:12	14.0	Non-Exposed	77	77	77	77	77	77	77	77	77	77	77	77	77	76	77	77	77	72	77	77	69	77	73	66	77	67	61	77	63	57	76	59	54	75	55	50	73	52	47	72	49	45
				Exposed	77	77	77	77	77	77	77	74	77	77	70	77	77	67	77	77	64	77	76	61	77	73	59	77	67	55	77	63	51	77	59	48	0	55	45	0	52	0	0	49	0	0
		4:12	18.4	Non-Exposed	77	77	77	77	77	77	77	77	77	77	77	77	77	76	77	77	77	72	77	76	69	77	73	66	77	67	61	77	63	57	76	59	53	75	55	50	73	52	47	72	49	45
				Exposed	77	77	77	77	77	77	77	74	77	77	70	77	77	67	77	77	64	77	76	61	77	73	59	77	67	55	77	63	51	77	59	48	0	55	45	0	52	0	0	49	0	0
		5:12	22.6	Non-Exposed	78	78	78	78	78	78	78	78	78	78	78	78	78	78	78	78	78	78	78	78	77	78	78	73	78	74	67	78	69	62	77	64	58	75	60	54	74	57	50	73	54	47
				Exposed	78	78	78	78	78	78	78	78	78	78	78	78	78	74	78	78	70	78	78	67	78	78	65	78	78	60	78	72	56	78	68	52	77	64	49	75	60	46	0	57	0	0
		6:12	26.6	Non-Exposed	80	80	80	80	80	80	80	80	80	80	80	80	80	80	80	80	80	77	80	80	73	80	74	67	79	68	62	78	64	58	77	60	54	75	57	50	74	54	47			
				Exposed	80	80	80	80	80	80	80	80	80	80	77	80	80	73	80	80	70	80	80	67	80	80	64	80	78	60	80	72	56	79	68	52	78	64	49	77	60	46	0	57	0	0
		7:12	30.3	Non-Exposed	81	81	81	81	81	81	81	81	81	81	81	81	81	81	81	81	81	81	81	80	80	79	79	79	77	77	74	75	75	68	73	72	63	71	67	59	69	64	56	68	60	53
				Exposed	81	81	81	81	81	81	81	81	81	81	81	81	81	81	81	81	79	81	80	76	80	77	72	79	70	67	77	66	62	75	62	58	73	58	55	71	55	52	69	52	49	0
		8:12	33.7	Non-Exposed	83	83	83	83	83	83	83	83	83	83	83	83	83	83	83	83	83	82	82	82	81	81	80	79	79	74	77	77	68	74	71	63	72	67	59	71	63	56	69	60	52
				Exposed	83	83	83	83	83	83	83	83	83	83	83	83	83	83	83	83	79	83	81	75	82	77	72	81	70	67	79	66	62	77	61	58	74	58	55	72	55	52	71	52	49	0
		9:12	36.9	Non-Exposed	86	86	86	86	86	86	86	86	86	86	86	86	86	86	86	85	85	85	84	84	84	83	83	80	81	81	73	78	77	68	76	71	63	74	67	59	72	63	56	70	60	52
				Exposed	86	86	86	86	86	86	86	86	86	86	86	86	86	83	86	85	79	85	81	75	84	77	72	83	70	67	81	65	62	78	61	58	76	58	55	74	55	52	72	52	49	0
		10:12	39.8	Non-Exposed	88	88	88	88	88	88	88	88	88	88	88	88	88	88	88	87	87	87	86	86	84	85	85	80	83	83	73	80	77	68	78	71	63	76	67	59	73	63	56	71	60	52
				Exposed	88	88	88	88	88	88	88	88	88	88	87	88	88	83	88	85	79	87	80	75	86	76	72	85	70	66	83	65	62	80	61	58	78	58	55	76	54	52	73	52	49	0
		11:12	42.5	Non-Exposed	91	91	91	91	91	91	91	91	91	91	91	91	91	91	91	90	90	88	89	89	84	88	88	80	85	83	73	82	77	68	80	71	63	77	67	59	75	63	55	73	60	52
				Exposed	91	91	91	91	91	91	91	91	91	91	87	91	89	83	91	84	79	90	80	75	89	76	71	88	70	66	85	65	62	82	61	58	80	58	55	77	54	52	75	52	49	0
		12:12	45	Non-Exposed	93	93	93	93	93	93	93	93	93	93	93	93	93	93	92	93	93	88	91	91	83	90	90	80	87	83	73	85	77	68	82	71	63	79	67	59	77	63	55	74	60	52
				Exposed	93	93	93	93	93	93	93	92	93	93	87	93	89	82	93	84	78	93	80	75	91	76	71	90	70	66	87	65	62	85	61	58	82	58	55	79	54	52	77	52	49	0
	D	Flat	0	Non-Exposed	87	87	87	87	87	87	87	87	83	87	87	78	87	87	74	87	86	71	87	82	68	87	78	65	87	71	60	87	66	56	87	62	52	87	58	49	87	55	46	87	52	0
				Exposed	87	87	87	87	84	87	87	79	87	87	75	87	85	71	87	81	68	87	77	65	87	73	62	87	68	58	87	63	54	87	59	50	0	55	47	0	52	45	0	49	0	0
		1:12	4.8	Non-Exposed	83	83	83	83	83	83	83	83	83	83	83	78	83	83	74	83	83	70	83	82	67	83	78	65	83	71	60	83	66	56	83	62	52	83	58	49	83	55	46	82	52	0
				Exposed	83	83	83	83	83	83	83	79	83	83	75	83	83	71	83	81	68	83	77	65	83	73	62	83	67	58	83	63	54	83	59	50	0	55	47	0	52	45	0	49	0	0
		2:12	9.5	Non-Exposed	80	80	80	80	80	80	80	80	77	80	80	73	80	77	69	80	73	66	80	70	63	80	67	61	79	62	56	78	58	53	76	54	49	75	51	46	73	48	0	72	45	0
				Exposed	80	76	80	80	71	80	80	68	80	80	64	80	76	62	80	73	59	80	70	56	80	67	54	80	62	50	79	58	47	0	54	0	0	51	0	0	48	0	0	45	0	0
		3:12	14.0	Non-Exposed	77	77	77	77	77	77	77	77	77	77	77	72	77	77	69	77	73	66	77	69	63	77	67	61	77	62	56	76	58	52	74	54	49	73	51	46	71	48	0	70	45	0
				Exposed	77	76	77	77	71	77	77	67	77	77	64	77	76	61	77	72	59	77	69	56	77	67	54	77	62	50	77	58	47	0	54	0	0	51	0	0	48	0	0	45	0	0
		4:12	18.4	Non-Exposed	77	77	77	77	77	77	77	77	76	77	77	72	77	76	69	77	72	66	77	69	63	77	67	61	77	62	56	75	57	52	74	54	49	73	51	46	71	48	0	70	45	0
				Exposed	77	75	77	77	71	77	77	67	77	77	64	77	76	61	77	72	59	77	69	56	77	67	54	77	62	50	77	57	47	0	54	0	0	51	0	0	48	0	0	45	0	0
		5:12	22.6	Non-Exposed	78	78	78	78	78	78	78	78	78	78	78	78	78	78	77	78	78	73	78	77	70	78	73	66	78	68	61	76	63	56	75	59	52	73	55	49	72	52	46	71	50	43
				Exposed	78	78	78	78	78	78	78	74	78	78	70	78	78	67	78	78	64	78	78	62	78	77	59	78	71	55	78	66	51	76	62	48	75	58	45	0	55	0	0	52	0	0
		6:12	26.6	Non-Exposed	80	80	80	80	80	80	80	80	80	80	80	80	80	80	77	80	80	73	80	77	69	80	73	66	79	67	61	78	63	56	76	59	52	75	55	49	73	52	46	72	49	43
				Exposed	80	80	80	80	79	80	80	74	80	80	70	80	80	67	80	80	64	80	80	62	80	77	59	80	71	55	79	66	51	78	62	48	0	58	45	0	55	0	0	52	0	0
		7:12	30.3	Non-Exposed	81	81	81	81	81	81	81	81	81	81	81	81	80	80	80	79	79	79	78	78	76	76	76	73	74	74	67	72	70	62	70	66	58	68	62	54	67	58	51	65	55	48
				Exposed	81	81	81	81	81	81	81	81	81	81	80	81	80	76	80	77	72	79	73	69	78	70	66	76	65	61	74	60	57	72	57	54	70	53	50	68	50	48	0	48	45	0
		8:12	33.7	Non-Exposed	83	83	83	83	83	83	83	83	83	83	83	83	82	82	82	81	81	80	79	79	76	78	78	73	76	76	67	74	70	62	72	66	58	70	62	54	68	58	51	66	55	48
				Exposed	83	83	83	83	83	83	83	83	83	83	79	83	81	75	82	76	72	81	73	69	79	70	66	78	65	61	76	60	57	74	56	54	72	53	50	70	50	48	0	47	45	0
		9:12	36.9	Non-Exposed	86	86	86	86	86	86	86	86	86	85	85	85	84	84	84	83	83	80	82	82	76	80	80	72	78	76	67	76	70	62	73	66	58	71	62	54	69	58	51	67	55	48
				Exposed	86	86	86	86	86	86	86	84	86	85	79	85	80	75	84	76	71	83	72	69	82	69	66	80	64	61	78	60	57	76	56	53	73	53	50	71	50	48	0	47	45	0
		10:12	39.8	Non-Exposed	88	88	88	88	88	88	88	88	88	88	88	88	86	86	84	85	85	80	84	84	76	82	82	72	80	75	67	77	70	62	75	65	58	72	62	54	70	58	51	68	55	48
				Exposed	88	88	88	88	88	88	88	84	88	85	79	88	80	75	86	76	71	85	72	68	84	69	66	82	64	61	80	60	57	77	56	53	75	53	50	72	50	47	0	47	45	0
		11:12	42.5	Non-Exposed	91	91	91	91	91	91	91	91	91	90	90	88	89	89	84	87	87	79	86	86	76	85	82	72	82	75	67	79	70	62	76	65	58	74	62	54	71	58	51	69	55	48
				Exposed	91	91	91	91	88	91	90	83	91	85	79	90	80	75	89	76	71	87	72	68	86	69	66	85	64	61	82	60	57	79	56	53	76	53	50	74	50	47	0	47	45	0
		12:12	45	Non-Exposed	93	93	93	93	93	93	93	93	93	93	93	88	91	91	83	90	90	79	88	86	75	87	82	72	84	75	66	81	70	62	78	65	57	75	61	54	73	58	51	70	55	48
				Exposed	93	93	93	93	88	93	89	83	93	84	79	93	80	75	91	76	71	90	72	68	88	69	66	87	64	61	84	60	57	81	56	53	78	53	50	75	50	47	0	47	45	0

Tamarack 2.3 Rail – Gable Flush-Mount on 30 Foot Maximum Mean Roof Height – Landscape – Panel Width = 40 Inches or Less

Ground Snow Load	Exposure Category	Roof Pitch	Roof Angle	Wind Speed (mph)	95			100			105			110			115			120			125			130			140			150			160			170			180			190		
				Roof Area	1	2	3	1	2	3	1	2	3	1	2	3	1	2	3	1	2	3	1	2	3	1	2	3	1	2	3	1	2	3	1	2	3	1	2	3	1	2	3	1	2	3
30	B	Flat	0	Non-Exposed	82	82	82	82	82	82	82	82	82	82	82	82	82	82	82	82	82	82	82	82	82	82	82	82	82	82	80	82	82	73	82	82	68	82	77	64	82	72	60	82	68	57
				Exposed	82	82	82	82	82	82	82	82	82	82	82	82	82	82	82	82	82	82	82	82	82	82	82	82	82	76	82	82	70	82	78	65	82	72	61	82	68	58	82	64	55	82
		1:12	4.8	Non-Exposed	78	78	78	78	78	78	78	78	78	78	78	78	78	78	78	78	78	78	78	78	78	78	78	78	78	78	78	78	78	73	78	78	68	78	76	64	78	71	60	78	67	57
				Exposed	78	78	78	78	78	78	78	78	78	78	78	78	78	78	78	78	78	78	78	78	78	78	78	78	78	76	78	78	70	78	77	65	78	72	61	78	68	58	78	64	55	78
		2:12	9.5	Non-Exposed	74	74	74	74	74	74	74	74	74	74	74	74	74	74	74	74	74	74	74	74	74	74	74	74	74	74	74	74	74	68	74	70	64	74	66	60	74	62	56	74	59	53
				Exposed	74	74	74	74	74	74	74	74	74	74	74	74	74	74	74	74	74	74	74	74	74	74	70	74	74	65	74	74	61	74	70	57	74	66	53	74	62	50	74	59	48	0
		3:12	14.0	Non-Exposed	71	71	71	71	71	71	71	71	71	71	71	71	71	71	71	71	71	71	71	71	71	71	71	71	71	71	71	71	71	68	71	70	64	71	66	60	71	62	56	71	59	53
				Exposed	71	71	71	71	71	71	71	71	71	71	71	71	71	71	71	71	71	71	71	71	71	71	70	71	71	65	71	71	61	71	70	57	71	66	53	71	62	50	71	59	48	0
		4:12	18.4	Non-Exposed	71	71	71	71	71	71	71	71	71	71	71	71	71	71	71	71	71	71	71	71	71	71	71	71	71	71	71	71	71	68	71	70	63	71	65	60	71	62	56	71	58	53
				Exposed	71	71	71	71	71	71	71	71	71	71	71	71	71	71	71	71	71	71	71	71	71	71	70	71	71	65	71	71	61	71	70	57	71	65	53	71	62	50	71	58	48	0
		5:12	22.6	Non-Exposed	72	72	72	72	72	72	72	72	72	72	72	72	72	72	72	72	72	72	72	72	72	72	72	72	72	72	72	72	72	72	72	72	70	72	72	65	72	68	61	72	64	57
				Exposed	72	72	72	72	72	72	72	72	72	72	72	72	72	72	72	72	72	72	72	72	72	72	72	72	72	71	72	72	66	72	72	62	72	72	58	72	71	55	72	68	52	72
		6:12	26.6	Non-Exposed	74	74	74	74	74	74	74	74	74	74	74	74	74	74	74	74	74	74	74	74	74	74	74	74	74	74	74	74	74	74	74	74	70	74	72	65	74	68	61	74	64	57
				Exposed	74	74	74	74	74	74	74	74	74	74	74	74	74	74	74	74	74	74	74	74	74	74	74	74	74	71	74	74	66	74	74	62	74	74	58	74	71	55	74	67	52	74
		7:12	30.3	Non-Exposed	76	76	76	76	76	76	76	76	76	76	76	76	76	76	76	76	76	76	76	76	76	76	76	76	76	76	76	75	75	75	74	74	74	72	72	72	71	71	67	69	69	63
				Exposed	76	76	76	76	76	76	76	76	76	76	76	76	76	76	76	76	76	76	76	76	76	76	76	76	76	76	76	75	74	75	73	69	74	69	65	72	65	61	71	61	58	69
		8:12	33.7	Non-Exposed	79	79	79	79	79	79	79	79	79	79	79	79	79	79	79	79	79	79	79	79	79	79	79	79	78	78	78	77	77	77	75	75	75	74	74	71	72	72	67	71	71	63
				Exposed	79	79	79	79	79	79	79	79	79	79	79	79	79	79	79	79	79	79	79	79	79	79	79	79	78	78	78	77	74	77	73	69	75	69	65	74	65	61	72	61	58	71
		9:12	36.9	Non-Exposed	81	81	81	81	81	81	81	81	81	81	81	81	81	81	81	81	81	81	81	81	81	81	81	81	81	81	81	79	79	79	78	78	77	76	76	71	74	74	67	73	71	63
				Exposed	81	81	81	81	81	81	81	81	81	81	81	81	81	81	81	81	81	81	81	81	81	81	81	81	81	80	81	79	74	79	73	69	78	68	65	76	65	61	74	61	58	73
		10:12	39.8	Non-Exposed	84	84	84	84	84	84	84	84	84	84	84	84	84	84	84	84	84	84	84	84	84	84	84	84	83	83	83	82	82	82	80	80	76	78	78	71	76	76	67	75	71	63
				Exposed	84	84	84	84	84	84	84	84	84	84	84	84	84	84	84	84	84	84	84	84	84	84	84	84	83	80	83	79	74	82	73	69	80	68	65	78	65	61	76	61	58	75
		11:12	42.5	Non-Exposed	86	86	86	86	86	86	86	86	86	86	86	86	86	86	86	86	86	86	86	86	86	86	86	86	86	86	86	84	84	82	82	82	76	81	81	71	79	75	67	77	71	63
				Exposed	86	86	86	86	86	86	86	86	86	86	86	86	86	86	86	86	86	86	86	86	86	86	86	86	86	80	86	79	74	84	73	69	82	68	65	81	64	61	79	61	58	77
		12:12	45	Non-Exposed	89	89	89	89	89	89	89	89	89	89	89	89	89	89	89	89	89	89	89	89	89	89	89	89	89	89	89	87	87	82	85	85	76	83	81	71	81	75	67	79	71	63
				Exposed	89	89	89	89	89	89	89	89	89	89	89	89	89	89	89	89	89	89	89	89	89	89	87	89	86	80	89	79	74	87	73	69	85	68	65	83	64	61	81	61	58	79
	C	Flat	0	Non-Exposed	82	82	82	82	82	82	82	82	82	82	82	82	82	82	82	82	82	78	82	82	74	82	82	71	82	79	66	82	73	61	82	68	57	82	64	54	82	60	51	82	57	48
				Exposed	82	82	82	82	82	82	82	82	82	82	82	82	82	78	82	82	75	82	82	71	82	81	68	82	74	63	82	69	59	82	64	55	82	60	52	0	57	49	0	54	46	0
		1:12	4.8	Non-Exposed	78	78	78	78	78	78	78	78	78	78	78	78	78	78	78	78	78	78	78	78	74	78	78	71	78	78	65	78	72	61	78	68	57	78	64	54	78	60	51	78	57	48
				Exposed	78	78	78	78	78	78	78	78	78	78	78	78	78	78	78	78	74	78	78	71	78	78	68	78	74	63	78	69	59	78	64	55	78	60	52	0	57	49	0	54	46	0
		2:12	9.5	Non-Exposed	74	74	74	74	74	74	74	74	74	74	74	74	74	74	74	74	74	72	74	74	69	74	73	66	74	68	61	74	63	57	74	59	54	72	55	50	71	52	48	70	49	45
				Exposed	74	74	74	74	74	74	74	74	74	74	70	74	74	67	74	74	64	74	74	62	74	73	59	74	68	55	74	63	51	74	59	48	0	55	45	0	52	0	0	49	0	0
		3:12	14.0	Non-Exposed	71	71	71	71	71	71	71	71	71	71	71	71	71	71	71	71	71	71	71	71	69	71	71	66	71	67	61	71	63	57	71	59	54	70	55	50	69	52	47	68	49	45
				Exposed	71	71	71	71	71	71	71	71	71	71	70	71	71	67	71	71	64	71	71	61	71	71	59	71	67	55	71	63	51	71	59	48	0	55	45	0	52	0	0	49	0	0
		4:12	18.4	Non-Exposed	71	71	71	71	71	71	71	71	71	71	71	71	71	71	71	71	71	69	71	71	69	71	71	66	71	67	61	71	63	57	71	59	53	70	55	50	69	52	47	68	49	45
				Exposed	71	71	71	71	71	71	71	71	71	71	70	71	71	67	71	71	64	71	71	61	71	71	59	71	67	55	71	63	51	71	59	48	0	55	45	0	52	0	0	49	0	0
		5:12	22.6	Non-Exposed	72	72	72	72	72	72	72	72	72	72	72	72	72	72	72	72	72	72	72	72	72	72	72	72	72	72	67	72	69	62	72	64	58	71	60	54	70	57	50	69	54	47
				Exposed	72	72	72	72	72	72	72	72	72	72	72	72	72	72	72	72	70	72	72	67	72	72	65	72	72	60	72	72	56	72	68	52	72	64	49	71	60	46	0	57	0	0
		6:12	26.6	Non-Exposed	74	74	74	74	74	74	74	74	74	74	74	74	74	74	74	74	74	74	74	74	73	74	74	67	74	68	62	74	64	58	72	60	54	71	57	50	70	54	47			
				Exposed	74	74	74	74	74	74	74	74	74	74	74	74	74	73	74	74	70	74	74	67	74	74	64	74	74	60	74	72	56	74	68	52	74	64	49	72	60	46	0	57	0	0
		7:12	30.3	Non-Exposed	76	76	76	76	76	76	76	76	76	76	76	76	76	76	76	76	76	75	75	75	74	74	74	73	73	73	71	71	68	70	70	63	68	67	59	66	64	56	65	60	53	
				Exposed	76	76	76	76	76	76	76	76	76	76	76	76	76	76	76	76	76	75	75	75	74	72	74	70	67	73	66	62	71	62	58	70	58	55	68	55	52	66	52	49	0	
		8:12	33.7	Non-Exposed	79	79	79	79	79	79	79	79	79	79	79	79	79	79	79	78	78	78	77	77	77	76	76	76	75	75	74	73	73	68	71	71	63	69	67	59	68	63	56	66	60	52
				Exposed	79	79	79	79	79	79	79	79	79	79	79	79	79	79	79	78	78	78	77	75	77	76	72	76	70	67	75	66	62	73	61	58	71	58	55	69	55	52	68	52	49	0
		9:12	36.9	Non-Exposed	81	81	81	81	81	81	81	81	81	81	81	81	81	81	81	80	80	80	80	80	80	79	79	79	77	77	73	75	75	68	73	71	63	71	67	59	69	63	56	68	60	52
				Exposed	81	81	81	81	81	81	81	81	81	81	81	81	81	81	81	80	79	80	80	75	80	77	72	79	70	67	77	65	62	75	61	58	73	58	55	71	55	52	69	52	49	0
		10:12	39.8	Non-Exposed	84	84	84	84	84	84	84	84	84	84	84	84	84	84	84	83	83	83	82	82	82	81	81	80	79	79	73	77	77	68	75	71	63	73	67	59	71	63	56	69	60	52
				Exposed	84	84	84	84	84	84	84	84	84	84	84	84	84	83	84	83	79	83	80	75	82	76	72	81	70	66	79	65	62	77	61	58	75	58	55	73	54	52	71	52	49	0
		11:12	42.5	Non-Exposed	86	86	86	86	86	86	86	86	86	86	86	86	86	86	86	86	86	85	85	84	84	84	80	81	81	73	79	77	68	77	71	63	75	67	59	72	63	55	70	60	52	
				Exposed	86	86	86	86	86	86	86	86	86	86	86	86	86	83	86	84	79	86	80	75	85	76	71	84	70	66	81	65	62	79	61	58	77	58	55	75	54	52	72	52	49	0
		12:12	45	Non-Exposed	89	89	89	89	89	89	89	89	89	89	89	89	89	89	89	89	89	88	87	87	83	86	86	80	84	83	73	81	77	68	79	71	63	76	67	59	74	63	55	72	60	52
				Exposed	89	89	89	89	89	89	89	89	89	89	87	89	89	82	89	84	78	89	80	75	87	76	71	86	70	66	84	65	62	81	61	58	79	58	55	76	54	52	74	52	49	0
	D	Flat	0	Non-Exposed	82	82	82	82	82	82	82	82	82	82	82	78	82	82	74	82	82	71	82	82	68	82	78	65	82	71	60	82	66	56	82	62	52	82	58	49	82	55	46	82	52	0
				Exposed	82	82	82	82	82	82	82	79	82	82	75	82	82	71	82	81	68	82	77	65	82	73	62	82	68	58	82	63	54	82	59	50	0	55	47	0	52	45	0	49	0	0
		1:12	4.8	Non-Exposed	78	78	78	78	78	78	78	78	78	78	78	78	78	78	74	78	78	70	78	78	67	78	78	65	78	71	60	78	66	56	78	62	52	78	58	49	78	55	46	77	52	0
				Exposed	78	78	78	78	78	78	78	78	78	78	75	78	78	71	78	78	68	78	77	65	78	73	62	78	67	58	78	63	54	78	59	50	0	55	47	0	52	45	0	49	0	0
		2:12	9.5	Non-Exposed	74	74	74	74	74	74	74	74	74	74	74	73	74	74	69	74	73	66	74	70	63	74	67	61	74	62	56	73	58	53	72	54	49	71	51	46	69	48	0	68	45	0
				Exposed	74	74	74	74	71	74	74	68	74	74	64	74	74	62	74	73	59	74	70	56	74	67	54	74	62	50	74	58	47	0	54	0	0	51	0	0	48	0	0	45	0	0
		3:12	14.0	Non-Exposed	71	71	71	71	71	71	71	71	71	71	71	71	71	71	69	71	71	66	71	69	63	71	67	61	71	62	56	71	58	52	70	54	49	69	51	46	67	48	0	66	45	0
				Exposed	71	71	71	71	71	71	71	67	71	71	64	71	71	61	71	71	59	71	69	56	71	67	54	71	62	50	71	58	47	0	54	0	0	51	0	0	48	0	0	45	0	0
		4:12	18.4	Non-Exposed	71	71	71	71	71	71	71	71	71	71	71	71	71	71	69	71	71	66	71	69	63	71	67	61	71	62	56	71	57	52	70	54	49	69	51	46	67	48	0	66	45	0
				Exposed	71	71	71	71	71	71	71	67	71	71	64	71	71	61	71	71	59	71	69	56	71	67	54	71	62	50	71	57	47	0	54	0	0	51	0	0	48	0	0	45	0	0
		5:12	22.6	Non-Exposed	72	72	72	72	72	72	72	72	72	72	72	72	72	72	72	72	72	70	72	72	66	72	68	61	72	63	56	71	59	52	69	52	46	67	50	43						
				Exposed	72	72	72	72	72	72	72	72	72	72	70	72	72	67	72	72	64	72	72	62	72	72	59	72	71	55	72	66	51	72	62	48	71	58	45	0	55	0	0	52	0	0
		6:12	26.6	Non-Exposed	74	74	74	74	74	74	74	74	74	74	74	74	74	74	69	74	73	66	74	69	63	74	67	61	73	63	56	72	59	52	71	55	49	69	52	46	68	49	43			
				Exposed	74	74	74	74	74	74	74	74	74	74	70	74	74	67	74	74	64	74	74	62	74	74	59	74	71	55	74	66	51	73	62	48	0	58	45	0	55	0	0	52	0	0
		7:12	30.3	Non-Exposed	76	76	76	76	76	76	76	76	76	76	76	76	75	75	75	74	74	74	73	73	73	72	72	72	71	71	67	69	69	62	67	66	58	66	62	54	64	58	51	62	55	48
				Exposed	76	76	76	76	76	76	76	76	76	76	76	76	75	75	75	74	72	74	73	69	73	70	66	72	65	61	71	60	57	69	57	54	67	53	50	66	50	48	0	48	45	0
		8:12	33.7	Non-Exposed	79	79	79	79	79	79	79	79	79	78	78	78	77	77	77	76	76	76	75	75	75	74	74	73	72	72	67	71	70	62	69	66	58	67	62	54	65	58	51	64	55	48
				Exposed	79	79	79	79	79	79	79	79	79	78	78	78	77	75	77	76	72	76	73	69	75	70	66	74	65	61	72	60	57	71	56	54	69	53	50	67	50	48	0	47	45	0
		9:12	36.9	Non-Exposed	81	81	81	81	81	81	81	81	81	81	81	81	80	80	80	79	79	78	78	76	76	76	72	74	74	67	72	70	62	70	66	58	68	62	54	67	58	51	65	55	48	
				Exposed	81	81	81	81	81	81	81	81	81	81	79	81	80	75	80	76	71	79	72	69	78	69	66	76	64	61	74	60	57	72	56	53	70	53	50	68	50	48	0	47	45	0
		10:12	39.8	Non-Exposed	84	84	84	84	84	84	84	84	84	83	83	83	82	82	82	81	81	80	80	80	76	79	79	72	76	75	67	74	70	62	72	65	58	70	62	54	68	58	51	66	55	48
				Exposed	84	84	84	84	84	84	84	84	84	83	79	83	80	75	82	76	71	81	72	68	80	69	66	79	64	61	76	60	57	74	56	53	72	53	50	70	50	47	0	47	45	0
		11:12	42.5	Non-Exposed	86	86	86	86	86	86	86	86	86	86	86	86	85	85	84	83	83	79	82	82	76	81	81	72	79	75	67	76	70	62	74	65	58	71	62	54	69	58	51	67	55	48
				Exposed	86	86	86	86	86	86	86	83	86	85	79	86	80	75	85	76	71	83	72	68	82	69	66	81	64	61	79	60	57	76	56	53	74	53	50	71	50	47	0	47	45	0
		12:12	45	Non-Exposed	89	89	89	89	89	89	89	89	89	89	89	88	87	87	83	86	86	79	85	85	75	83	82	72	81	75	66	78	70	62	75	65	57	73	61	54	71	58	51	68	55	48
				Exposed	89	89	89	89	88	89	89	83	89	84	79	89	80	75	87	76	71	86	72	68	85	69	66	83	64	61	81	60	57	78	56	53	75	53	50	73	50	47	0	47	45	0

Tamarack 2.3 Rail – Gable Flush-Mount on 30 Foot Maximum Mean Roof Height – Landscape – Panel Width = 40 Inches or Less

Ground Snow Load	Exposure Category	Roof Pitch	Roof Angle	Wind Speed (mph)	95			100			105			110			115			120			125			130			140			150			160			170			180			190		
				Roof Area	1	2	3	1	2	3	1	2	3	1	2	3	1	2	3	1	2	3	1	2	3	1	2	3	1	2	3	1	2	3	1	2	3	1	2	3	1	2	3	1	2	3
35	B	Flat	0	Non-Exposed	78	78	78	78	78	78	78	78	78	78	78	78	78	78	78	78	78	78	78	78	78	78	78	78	78	78	78	78	78	73	78	78	68	78	77	64	78	72	60	78	68	57
				Exposed	78	78	78	78	78	78	78	78	78	78	78	78	78	78	78	78	78	78	78	78	78	78	78	78	78	76	78	78	70	78	78	65	78	72	61	78	68	58	78	64	55	78
		1:12	4.8	Non-Exposed	72	72	72	72	72	72	72	72	72	72	72	72	72	72	72	72	72	72	72	72	72	72	72	72	72	72	72	72	72	72	72	65	68	72	72	64	72	71	60	72	67	57
				Exposed	72	72	72	72	72	72	72	72	72	72	72	72	72	72	72	72	72	72	72	72	72	72	72	72	72	72	72	72	70	72	72	65	72	72	61	72	68	58	72	64	55	72
		2:12	9.5	Non-Exposed	69	69	69	69	69	69	69	69	69	69	69	69	69	69	69	69	69	69	69	69	69	69	69	69	69	69	69	69	69	68	69	69	64	69	66	60	69	62	56	69	59	53
				Exposed	69	69	69	69	69	69	69	69	69	69	69	69	69	69	69	69	69	69	69	69	69	69	69	69	69	65	69	69	61	69	69	57	69	66	53	69	62	50	69	59	48	0
		3:12	14.0	Non-Exposed	66	66	66	66	66	66	66	66	66	66	66	66	66	66	66	66	66	66	66	66	66	66	66	66	66	66	66	66	66	66	66	66	64	66	66	60	66	62	56	66	59	53
				Exposed	66	66	66	66	66	66	66	66	66	66	66	66	66	66	66	66	66	66	66	66	66	66	66	66	66	65	66	66	61	66	66	57	66	66	53	66	62	50	66	59	48	0
		4:12	18.4	Non-Exposed	66	66	66	66	66	66	66	66	66	66	66	66	66	66	66	66	66	66	66	66	66	66	66	66	66	66	66	66	66	66	66	66	63	66	65	60	66	62	56	66	59	53
				Exposed	66	66	66	66	66	66	66	66	66	66	66	66	66	66	66	66	66	66	66	66	66	66	66	66	66	65	66	66	61	66	66	57	66	66	53	66	62	50	66	59	48	0
		5:12	22.6	Non-Exposed	67	67	67	67	67	67	67	67	67	67	67	67	67	67	67	67	67	67	67	67	67	67	67	67	67	67	67	67	67	62	67	64	58	67	60	54	67	57	50	66	54	47
				Exposed	67	67	67	67	67	67	67	67	67	67	67	67	67	67	67	67	67	67	67	67	67	67	65	67	67	60	67	67	56	67	67	52	67	64	49	67	60	46	0	57	0	0
		6:12	26.6	Non-Exposed	69	69	69	69	69	69	69	69	69	69	69	69	69	69	69	69	69	69	69	69	69	69	69	69	69	69	67	69	68	62	69	64	58	69	60	54	68	57	50	67	54	47
				Exposed	69	69	69	69	69	69	69	69	69	69	69	69	69	69	69	69	69	69	69	67	69	69	64	69	69	60	69	69	56	69	68	52	69	64	49	69	60	46	0	57	0	0
		7:12	30.3	Non-Exposed	71	71	71	71	71	71	71	71	71	71	71	71	71	71	71	71	71	71	71	71	71	71	71	71	69	69	69	68	68	68	67	67	63	65	65	59	64	64	56	63	60	53
				Exposed	71	71	71	71	71	71	71	71	71	71	71	71	71	71	71	71	71	71	71	71	71	71	71	71	69	67	69	66	62	68	62	58	67	58	55	65	55	52	64	52	49	0
		8:12	33.7	Non-Exposed	74	74	74	74	74	74	74	74	74	74	74	74	74	74	74	74	74	74	74	74	74	73	73	73	71	71	71	70	70	68	68	68	63	67	67	59	65	63	56	64	60	52
				Exposed	74	74	74	74	74	74	74	74	74	74	74	74	74	74	74	74	74	74	74	74	74	73	72	73	70	67	71	66	62	70	61	58	68	58	55	67	55	52	65	52	49	0
		9:12	36.9	Non-Exposed	78	78	78	78	78	78	78	78	78	78	78	78	77	77	77	77	77	77	76	76	76	75	75	75	73	73	73	72	72	68	70	70	63	68	67	59	67	63	56	65	60	52
				Exposed	78	78	78	78	78	78	78	78	78	78	78	78	77	77	77	77	77	77	76	75	76	75	72	75	70	67	73	65	62	72	61	58	70	58	55	68	55	52	67	52	49	0
		10:12	39.8	Non-Exposed	80	80	80	80	80	80	80	80	80	80	80	80	80	80	80	79	79	79	78	78	78	78	78	78	76	76	73	74	74	68	72	71	63	70	67	59	69	63	56	67	60	52
				Exposed	80	80	80	80	80	80	80	80	80	80	80	80	80	80	80	79	79	79	78	75	78	76	72	78	70	66	76	65	62	74	61	58	72	58	55	70	54	52	69	52	49	0
		11:12	42.5	Non-Exposed	83	83	83	83	83	83	83	83	83	83	83	83	83	83	83	82	82	82	81	81	81	80	80	80	78	78	73	76	76	68	74	71	63	72	67	59	70	63	55	68	60	52
				Exposed	83	83	83	83	83	83	83	83	83	83	83	83	83	83	83	82	79	82	80	75	81	76	71	80	70	66	78	65	62	76	61	58	74	58	55	72	54	52	70	52	49	0
		12:12	45	Non-Exposed	86	86	86	86	86	86	86	86	86	86	86	86	86	86	86	85	85	85	84	84	83	83	83	80	81	81	73	78	77	68	76	71	63	74	67	59	72	63	55	70	60	52
				Exposed	86	86	86	86	86	86	86	86	86	86	86	86	86	82	86	84	78	85	80	75	84	76	71	83	70	66	81	65	62	78	61	58	76	58	55	74	54	52	72	52	49	0
	C	Flat	0	Non-Exposed	78	78	78	78	78	78	78	78	78	78	78	78	78	78	78	78	78	78	78	78	74	78	78	71	78	78	66	78	73	61	78	68	57	78	64	54	78	60	51	78	57	48
				Exposed	78	78	78	78	78	78	78	78	78	78	78	78	78	78	78	78	75	78	78	71	78	78	68	78	74	63	78	69	59	78	64	55	78	60	52	0	57	49	0	54	46	0
		1:12	4.8	Non-Exposed	72	72	72	72	72	72	72	72	72	72	72	72	72	72	72	72	72	72	72	72	72	72	72	71	72	72	65	72	72	61	72	68	57	72	64	54	72	60	51	72	57	48
				Exposed	72	72	72	72	72	72	72	72	72	72	72	72	72	72	72	72	72	72	72	71	72	72	68	72	72	63	72	69	59	72	64	55	72	60	52	0	57	49	0	54	46	0
		2:12	9.5	Non-Exposed	69	69	69	69	69	69	69	69	69	69	69	69	69	69	69	69	69	69	69	69	69	69	69	66	69	68	61	69	63	57	69	59	54	69	55	50	68	52	48	67	49	45
				Exposed	69	69	69	69	69	69	69	69	69	69	69	69	69	67	69	69	64	69	69	62	69	69	59	69	68	55	69	63	51	69	59	48	0	55	45	0	52	0	0	49	0	0
		3:12	14.0	Non-Exposed	66	66	66	66	66	66	66	66	66	66	66	66	66	66	66	66	66	66	66	66	66	66	66	66	66	66	61	66	63	57	66	59	54	66	55	50	66	52	47	65	49	45
				Exposed	66	66	66	66	66	66	66	66	66	66	66	66	66	66	66	66	64	66	66	61	66	66	59	66	66	55	66	63	51	66	59	48	0	55	45	0	52	0	0	49	0	0
		4:12	18.4	Non-Exposed	66	66	66	66	66	66	66	66	66	66	66	66	66	66	66	66	66	66	66	66	66	66	66	66	66	66	61	66	63	57	66	59	53	66	55	50	66	52	47	65	49	45
				Exposed	66	66	66	66	66	66	66	66	66	66	66	66	66	66	66	66	64	66	66	61	66	66	59	66	66	55	66	63	51	66	59	48	0	55	45	0	52	0	0	49	0	0
		5:12	22.6	Non-Exposed	67	67	67	67	67	67	67	67	67	67	67	67	67	67	67	67	67	67	67	67	67	67	67	67	67	67	67	67	67	62	67	64	58	67	60	54	67	57	50	66	54	47
				Exposed	67	67	67	67	67	67	67	67	67	67	67	67	67	67	67	67	67	67	67	67	67	67	65	67	67	60	67	67	56	67	67	52	67	64	49	67	60	46	0	57	0	0
		6:12	26.6	Non-Exposed	69	69	69	69	69	69	69	69	69	69	69	69	69	69	69	69	69	69	69	69	69	69	69	69	69	69	67	69	68	62	69	64	58	69	60	54	68	57	50	67	54	47
				Exposed	69	69	69	69	69	69	69	69	69	69	69	69	69	69	69	69	69	69	69	67	69	69	64	69	69	60	69	69	56	69	68	52	69	64	49	69	60	46	0	57	0	0
		7:12	30.3	Non-Exposed	71	71	71	71	71	71	71	71	71	71	71	71	71	71	71	71	71	71	71	71	71	71	71	71	69	69	69	68	68	68	67	67	63	65	65	59	64	64	56	63	60	53
				Exposed	71	71	71	71	71	71	71	71	71	71	71	71	71	71	71	71	71	71	71	71	71	71	71	71	69	67	69	66	62	68	62	58	67	58	55	65	55	52	64	52	49	0
		8:12	33.7	Non-Exposed	74	74	74	74	74	74	74	74	74	74	74	74	74	74	74	74	74	74	74	74	74	73	73	73	71	71	71	70	70	68	68	68	63	67	67	59	65	63	56	64	60	52
				Exposed	74	74	74	74	74	74	74	74	74	74	74	74	74	74	74	74	74	74	74	74	74	73	72	73	70	67	71	66	62	70	61	58	68	58	55	67	55	52	65	52	49	0
		9:12	36.9	Non-Exposed	78	78	78	78	78	78	78	78	78	78	78	78	77	77	77	77	77	77	76	76	76	75	75	75	73	73	73	72	72	68	70	70	63	68	67	59	67	63	56	65	60	52
				Exposed	78	78	78	78	78	78	78	78	78	78	78	78	77	77	77	77	77	77	76	75	76	75	72	75	70	67	73	65	62	72	61	58	70	58	55	68	55	52	67	52	49	0
		10:12	39.8	Non-Exposed	80	80	80	80	80	80	80	80	80	80	80	80	80	80	80	79	79	79	78	78	78	78	78	78	76	76	73	74	74	68	72	71	63	70	67	59	69	63	56	67	60	52
				Exposed	80	80	80	80	80	80	80	80	80	80	80	80	80	80	80	79	79	79	78	75	78	76	72	78	70	66	76	65	62	74	61	58	72	58	55	70	54	52	69	52	49	0
		11:12	42.5	Non-Exposed	83	83	83	83	83	83	83	83	83	83	83	83	83	83	83	82	82	82	81	81	81	80	80	80	78	78	73	76	76	68	74	71	63	72	67	59	70	63	55	68	60	52
				Exposed	83	83	83	83	83	83	83	83	83	83	83	83	83	83	83	82	79	82	80	75	81	76	71	80	70	66	78	65	62	76	61	58	74	58	55	72	54	52	70	52	49	0
		12:12	45	Non-Exposed	86	86	86	86	86	86	86	86	86	86	86	86	86	86	86	85	85	85	84	84	83	83	83	80	81	81	73	78	77	68	76	71	63	74	67	59	72	63	55	70	60	52
				Exposed	86	86	86	86	86	86	86	86	86	86	86	86	86	82	86	84	78	85	80	75	84	76	71	83	70	66	81	65	62	78	61	58	76	58	55	74	54	52	72	52	49	0
	D	Flat	0	Non-Exposed	78	78	78	78	78	78	78	78	78	78	78	78	78	78	74	78	78	71	78	78	68	78	78	65	78	71	60	78	66	56	78	62	52	78	58	49	78	55	46	77	52	0
				Exposed	78	78	78	78	78	78	78	78	78	78	75	78	78	71	78	78	68	78	77	65	78	73	62	78	68	58	78	63	54	78	59	50	0	55	47	0	52	45	0	49	0	0
		1:12	4.8	Non-Exposed	72	72	72	72	72	72	72	72	72	72	72	72	72	72	72	72	70	72	72	67	72	72	65	72	71	60	72	66	56	72	62	52	72	58	49	72	55	46	72	52	0
				Exposed	72	72	72	72	72	72	72	72	72	72	72	72	72	71	72	72	68	72	72	65	72	72	62	72	67	58	72	63	54	72	59	50	0	55	47	0	52	45	0	49	0	0
		2:12	9.5	Non-Exposed	69	69	69	69	69	69	69	69	69	69	69	69	69	69	69	69	69	66	69	69	63	69	67	61	69	62	56	69	58	53	68	54	49	67	51	46	66	48	0	65	45	0
				Exposed	69	69	69	69	69	69	68	69	69	64	69	69	62	69	69	59	69	69	56	69	67	54	69	62	50	69	58	47	0	54	0	0	51	0	0	48	0	0	45	0	0
		3:12	14.0	Non-Exposed	66	66	66	66	66	66	66	66	66	66	66	66	66	66	66	66	66	63	66	66	61	66	62	56	66	58	52	66	54	49	65	51	46	64	48	0	63	45	0
				Exposed	66	66	66	66	66	66	66	66	66	64	66	66	61	66	66	59	66	66	56	66	66	54	66	62	50	66	58	47	0	54	0	0	51	0	0	48	0	0	45	0	0
		4:12	18.4	Non-Exposed	66	66	66	66	66	66	66	66	66	66	66	66	66	66	66	66	66	63	66	66	61	66	62	56	66	57	52	66	54	49	65	51	46	64	48	0	63	45	0
				Exposed	66	66	66	66	66	66	66	66	66	64	66	66	61	66	66	59	66	66	56	66	66	54	66	62	50	66	57	47	0	54	0	0	51	0	0	48	0	0	45	0	0
		5:12	22.6	Non-Exposed	67	67	67	67	67	67	67	67	67	67	67	67	67	67	67	67	67	67	67	67	67	67	67	66	67	67	61	67	63	56	67	59	52	66	55	49	65	52	46	64	50	43
				Exposed	67	67	67	67	67	67	67	67	67	67	67	67	67	67	67	67	64	67	67	62	67	67	59	67	67	55	67	66	51	67	62	48	67	58	45	0	55	0	0	52	0	0
		6:12	26.6	Non-Exposed	69	69	69	69	69	69	69	69	69	69	69	69	69	69	69	69	69	69	69	69	69	69	69	66	69	67	61	69	63	56	68	59	52	67	55	49	66	52	46	65	49	43
				Exposed	69	69	69	69	69	69	69	69	69	69	69	69	69	67	69	69	64	69	69	62	69	69	59	69	69	55	69	66	51	69	62	48	0	58	45	0	55	0	0	52	0	0
		7:12	30.3	Non-Exposed	71	71	71	71	71	71	71	71	71	71	71	71	71	71	71	71	71	70	70	70	69	69	69	68	68	67	66	66	62	65	65	58	63	62	54	62	58	51	60	55	48
				Exposed	71	71	71	71	71	71	71	71	71	71	71	71	71	71	71	71	71	70	69	70	69	66	69	65	61	68	60	57	66	57	54	65	53	50	63	50	48	0	48	45	0
		8:12	33.7	Non-Exposed	74	74	74	74	74	74	74	74	74	74	74	74	73	73	73	73	73	73	72	72	72	71	71	71	69	69	67	68	68	62	66	66	58	65	62	54	63	58	51	61	55	48
				Exposed	74	74	74	74	74	74	74	74	74	74	74	74	73	73	73	73	72	73	72	69	72	70	66	71	65	61	69	60	57	68	56	54	66	53	50	65	50	48	0	47	45	0
		9:12	36.9	Non-Exposed	78	78	78	78	78	78	78	78	78	77	77	77	76	76	76	75	75	75	74	74	74	73	73	72	71	71	67	70	70	62	68	66	58	66	62	54	64	58	51	63	55	48
				Exposed	78	78	78	78	78	78	78	78	78	77	77	77	76	75	76	75	71	75	72	69	74	69	66	73	64	61	71	60	57	70	56	53	68	53	50	66	50	48	0	47	45	0
		10:12	39.8	Non-Exposed	80	80	80	80	80	80	80	80	80	79	79	79	78	78	78	77	77	77	76	76	76	75	75	72	73	73	67	71	70	62	70	65	58	68	62	54	66	58	51	64	55	48
				Exposed	80	80	80	80	80	80	80	80	80	79	79	79	78	75	78	76	71	77	72	68	76	69	66	75	64	61	73	60	57	71	56	53	70	53	50	68	50	47	0	47	45	0
		11:12	42.5	Non-Exposed	83	83	83	83	83	83	83	83	83	82	82	82	81	81	81	80	80	79	79	79	76	78	78	72	76	75	67	73	70	62	71	65	58	69	62	54	67	58	51	65	55	48
				Exposed	83	83	83	83	83	83	83	83	83	82	79	82	80	75	81	76	71	80	72	68	79	69	66	78	64	61	76	60	57	73	56	53	71	53	50	69	50	47	0	47	45	0
		12:12	45	Non-Exposed	86	86	86	86	86	86	86	86	86	85	85	85	84	84	83	83	83	79	81	81	75	80	80	72	78	75	66	75	70	62	73	65	57	71	61	54	69	58	51	67	55	48
				Exposed	86	86	86	86	86	86	86	83	86	84	79	85	80	75	84	76	71	83	72	68	81	69	66	80	64	61	78	60	57	75	56	53	73	53	50	71	50	47	0	47	45	0

Tamarack 2.3 Rail – Gable Flush-Mount on 30 Foot Maximum Mean Roof Height – Landscape – Panel Width = 40 Inches or Less

Ground Snow Load	Exposure Category	Roof Pitch	Roof Angle	Wind Speed (mph)	95			100			105			110			115			120			125			130			140			150			160			170			180			190		
				Roof Area	1	2	3	1	2	3	1	2	3	1	2	3	1	2	3	1	2	3	1	2	3	1	2	3	1	2	3	1	2	3	1	2	3	1	2	3	1	2	3	1	2	3
40	B	Flat	0	Non-Exposed	73	73	73	73	73	73	73	73	73	73	73	73	73	73	73	73	73	73	73	73	73	73	73	73	73	73	73	73	73	73	73	73	68	73	73	64	73	72	60	73	68	57
				Exposed	73	73	73	73	73	73	73	73	73	73	73	73	73	73	73	73	73	73	73	73	73	73	73	73	73	73	73	73	70	73	73	65	73	72	61	73	68	58	73	64	55	73
		1:12	4.8	Non-Exposed	68	68	68	68	68	68	68	68	68	68	68	68	68	68	68	68	68	68	68	68	68	68	68	68	68	68	68	68	68	68	68	68	68	68	68	64	68	68	60	68	67	57
				Exposed	68	68	68	68	68	68	68	68	68	68	68	68	68	68	68	68	68	68	68	68	68	68	68	68	68	68	68	68	68	68	68	65	68	68	61	68	68	58	68	64	55	68
		2:12	9.5	Non-Exposed	64	64	64	64	64	64	64	64	64	64	64	64	64	64	64	64	64	64	64	64	64	64	64	64	64	64	64	64	64	64	64	64	64	64	64	60	64	62	56	64	59	53
				Exposed	64	64	64	64	64	64	64	64	64	64	64	64	64	64	64	64	64	64	64	64	64	64	64	64	64	64	64	64	61	64	64	57	64	64	53	64	62	50	64	59	48	0
		3:12	14.0	Non-Exposed	62	62	62	62	62	62	62	62	62	62	62	62	62	62	62	62	62	62	62	62	62	62	62	62	62	62	62	62	62	62	62	62	62	62	62	60	62	62	56	62	59	53
				Exposed	62	62	62	62	62	62	62	62	62	62	62	62	62	62	62	62	62	62	62	62	62	62	62	62	62	62	62	62	61	62	62	57	62	62	53	62	59	48	0	59	48	0
		4:12	18.4	Non-Exposed	62	62	62	62	62	62	62	62	62	62	62	62	62	62	62	62	62	62	62	62	62	62	62	62	62	62	62	62	62	62	62	62	62	62	62	60	62	62	56	62	59	53
				Exposed	62	62	62	62	62	62	62	62	62	62	62	62	62	62	62	62	62	62	62	62	62	62	62	62	62	62	62	62	61	62	62	57	62	62	53	62	59	50	62	59	48	0
		5:12	22.6	Non-Exposed	63	63	63	63	63	63	63	63	63	63	63	63	63	63	63	63	63	63	63	63	63	63	63	63	63	63	63	63	63	62	63	63	63	63	63	63	63	63	61	63	63	57
				Exposed	63	63	63	63	63	63	63	63	63	63	63	63	63	63	63	63	63	63	63	63	63	63	63	63	63	63	63	63	63	62	63	63	63	63	58	63	63	55	63	63	52	63
		6:12	26.6	Non-Exposed	65	65	65	65	65	65	65	65	65	65	65	65	65	65	65	65	65	65	65	65	65	65	65	65	65	65	65	65	65	65	65	65	65	65	65	65	65	65	61	65	64	47
				Exposed	65	65	65	65	65	65	65	65	65	65	65	65	65	65	65	65	65	65	65	65	65	65	65	65	65	65	65	65	65	65	65	65	65	65	65	65	65	65	61	65	64	0
		7:12	30.3	Non-Exposed	67	67	67	67	67	67	67	67	67	67	67	67	67	67	67	67	67	67	67	67	67	67	67	67	67	67	67	67	67	67	67	67	67	66	66	66	65	65	65	64	64	63
				Exposed	67	67	67	67	67	67	67	67	67	67	67	67	67	67	67	67	67	67	67	67	67	67	67	67	67	67	67	67	67	67	67	67	67	66	65	66	65	61	65	61	58	64
		8:12	33.7	Non-Exposed	70	70	70	70	70	70	70	70	70	70	70	70	70	70	70	70	70	70	70	70	70	70	70	70	70	70	70	70	70	70	69	69	69	68	68	68	67	67	67	66	66	63
				Exposed	70	70	70	70	70	70	70	70	70	70	70	70	70	70	70	70	70	70	70	70	70	70	70	70	70	70	70	70	70	70	69	69	69	68	65	68	65	61	67	61	58	66
		9:12	36.9	Non-Exposed	73	73	73	73	73	73	73	73	73	73	73	73	73	73	73	73	73	73	73	73	73	73	73	73	73	73	73	72	72	72	71	71	71	70	70	70	69	69	67	68	68	63
				Exposed	73	73	73	73	73	73	73	73	73	73	73	73	73	73	73	73	73	73	73	73	73	73	73	73	73	73	73	72	72	72	71	69	71	68	65	70	65	61	69	61	58	68
		10:12	39.8	Non-Exposed	77	77	77	77	77	77	77	77	77	77	77	77	77	77	77	77	77	77	77	77	77	77	77	77	76	76	76	75	75	75	74	74	74	72	72	71	71	71	67	69	69	63
				Exposed	77	77	77	77	77	77	77	77	77	77	77	77	77	77	77	77	77	77	77	77	77	77	77	77	76	76	76	75	74	75	73	69	74	68	65	72	65	61	71	61	58	69
		11:12	42.5	Non-Exposed	80	80	80	80	80	80	80	80	80	80	80	80	80	80	80	80	80	80	80	80	80	80	80	80	79	79	79	78	78	78	76	76	76	75	75	71	73	73	67	72	71	63
				Exposed	80	80	80	80	80	80	80	80	80	80	80	80	80	80	80	80	80	80	80	80	80	80	80	80	79	79	79	78	74	78	73	69	76	68	65	75	64	61	73	61	58	72
		12:12	45	Non-Exposed	82	82	82	82	82	82	82	82	82	82	82	82	82	82	82	82	82	82	82	82	82	82	82	82	82	82	82	80	80	80	79	79	76	77	77	71	75	75	67	74	71	63
				Exposed	82	82	82	82	82	82	82	82	82	82	82	82	82	82	82	82	82	82	82	82	82	82	82	82	82	80	82	79	74	80	73	69	79	68	65	77	64	61	75	61	58	74
	C	Flat	0	Non-Exposed	73	73	73	73	73	73	73	73	73	73	73	73	73	73	73	73	73	73	73	73	73	73	73	71	73	73	66	73	73	61	73	68	57	73	64	54	73	60	51	73	57	48
				Exposed	73	73	73	73	73	73	73	73	73	73	73	73	73	73	73	73	73	73	73	71	73	73	68	73	73	63	73	69	59	73	64	55	73	60	52	0	57	49	0	54	46	0
		1:12	4.8	Non-Exposed	68	68	68	68	68	68	68	68	68	68	68	68	68	68	68	68	68	68	68	68	68	68	68	68	68	68	65	68	68	61	68	68	57	68	64	54	68	60	51	68	57	48
				Exposed	68	68	68	68	68	68	68	68	68	68	68	68	68	68	68	68	68	68	68	68	68	68	68	68	68	63	68	68	59	68	64	55	68	60	52	0	57	49	0	54	46	0
		2:12	9.5	Non-Exposed	64	64	64	64	64	64	64	64	64	64	64	64	64	64	64	64	64	64	64	64	64	64	64	64	64	64	61	64	63	57	64	59	54	64	55	50	64	52	48	64	49	45
				Exposed	64	64	64	64	64	64	64	64	64	64	64	64	64	64	64	64	64	64	64	62	64	64	59	64	64	55	64	63	51	64	59	48	0	55	45	0	52	0	0	49	0	0
		3:12	14.0	Non-Exposed	62	62	62	62	62	62	62	62	62	62	62	62	62	62	62	62	62	62	62	62	62	62	62	62	62	62	61	62	62	57	62	59	54	62	55	50	62	52	47	62	49	45
				Exposed	62	62	62	62	62	62	62	62	62	62	62	62	62	62	62	62	62	62	62	61	62	62	59	62	62	55	62	62	51	62	59	48	0	55	45	0	52	0	0	49	0	0
		4:12	18.4	Non-Exposed	62	62	62	62	62	62	62	62	62	62	62	62	62	62	62	62	62	62	62	62	62	62	62	62	62	62	61	62	62	57	62	59	53	62	55	50	62	52	47	62	49	45
				Exposed	62	62	62	62	62	62	62	62	62	62	62	62	62	62	62	62	62	62	62	61	62	62	59	62	62	55	62	62	51	62	59	48	0	55	45	0	52	0	0	49	0	0
		5:12	22.6	Non-Exposed	63	63	63	63	63	63	63	63	63	63	63	63	63	63	63	63	63	63	63	63	63	63	63	63	63	63	63	63	63	62	63	63	58	63	60	54	63	57	50	63	54	47
				Exposed	63	63	63	63	63	63	63	63	63	63	63	63	63	63	63	63	63	63	63	63	63	63	63	63	63	60	63	63	56	63	63	52	63	63	49	63	60	46	0	57	0	0
		6:12	26.6	Non-Exposed	65	65	65	65	65	65	65	65	65	65	65	65	65	65	65	65	65	65	65	65	65	65	65	65	65	65	65	65	65	62	65	64	58	65	60	54	65	57	50	64	54	47
				Exposed	65	65	65	65	65	65	65	65	65	65	65	65	65	65	65	65	65	65	65	65	65	65	64	65	65	60	65	65	56	65	65	52	65	64	49	65	60	46	0	57	0	0
		7:12	30.3	Non-Exposed	67	67	67	67	67	67	67	67	67	67	67	67	67	67	67	67	67	67	67	67	67	67	67	67	67	67	67	65	65	65	64	64	63	63	63	59	62	62	56	60	60	53
				Exposed	67	67	67	67	67	67	67	67	67	67	67	67	67	67	67	67	67	67	67	67	67	67	67	67	67	67	67	65	62	65	62	58	64	58	55	63	55	52	62	52	49	0
		8:12	33.7	Non-Exposed	70	70	70	70	70	70	70	70	70	70	70	70	70	70	70	70	70	70	70	70	70	70	70	70	68	68	68	67	67	67	66	66	63	64	64	59	63	63	56	62	60	52
				Exposed	70	70	70	70	70	70	70	70	70	70	70	70	70	70	70	70	70	70	70	70	70	70	70	70	68	67	68	66	62	67	61	58	66	58	55	64	55	52	63	52	49	0
		9:12	36.9	Non-Exposed	73	73	73	73	73	73	73	73	73	73	73	73	73	73	73	73	73	73	73	73	73	72	72	72	70	70	70	69	69	68	68	68	63	66	66	59	65	63	56	63	60	52
				Exposed	73	73	73	73	73	73	73	73	73	73	73	73	73	73	73	73	73	73	73	73	73	72	72	72	70	67	70	65	62	69	61	58	68	58	55	66	55	52	65	52	49	0
		10:12	39.8	Non-Exposed	77	77	77	77	77	77	77	77	77	77	77	77	77	77	77	76	76	76	75	75	75	74	74	74	73	73	73	71	71	68	70	70	63	68	67	59	66	63	56	65	60	52
				Exposed	77	77	77	77	77	77	77	77	77	77	77	77	77	77	77	76	76	76	75	75	75	74	72	74	70	66	73	65	62	71	61	58	70	58	55	68	54	52	66	52	49	0
		11:12	42.5	Non-Exposed	80	80	80	80	80	80	80	80	80	80	80	80	80	80	80	79	79	79	78	78	78	77	77	77	75	75	73	73	73	68	72	71	63	70	67	59	68	63	55	67	60	52
				Exposed	80	80	80	80	80	80	80	80	80	80	80	80	80	80	80	79	79	79	78	75	78	76	71	77	70	66	75	65	62	73	61	58	72	58	55	70	54	52	68	52	49	0
		12:12	45	Non-Exposed	82	82	82	82	82	82	82	82	82	82	82	82	82	82	82	82	82	82	81	81	81	80	80	80	78	78	73	76	76	68	74	71	63	72	67	59	70	63	55	68	60	52
				Exposed	82	82	82	82	82	82	82	82	82	82	82	82	82	82	82	82	82	82	80	75	81	76	71	80	70	66	78	65	62	76	61	58	74	58	55	72	54	52	70	52	49	0
	D	Flat	0	Non-Exposed	73	73	73	73	73	73	73	73	73	73	73	73	73	73	73	73	73	71	73	73	68	73	73	65	73	71	60	73	66	56	73	62	52	73	58	49	73	55	46	73	52	0
				Exposed	73	73	73	73	73	73	73	73	73	73	73	73	73	71	73	73	68	73	73	65	73	73	62	73	68	58	73	63	54	73	59	50	0	55	47	0	52	45	0	49	0	0
		1:12	4.8	Non-Exposed	68	68	68	68	68	68	68	68	68	68	68	68	68	68	68	68	68	68	68	68	67	68	68	65	68	68	60	68	66	56	68	62	52	68	58	49	68	55	46	68	52	0
				Exposed	68	68	68	68	68	68	68	68	68	68	68	68	68	68	68	68	68	68	68	65	68	68	62	68	67	58	68	63	54	68	59	50	0	55	47	0	52	45	0	49	0	0
		2:12	9.5	Non-Exposed	64	64	64	64	64	64	64	64	64	64	64	64	64	64	64	64	64	64	64	63	64	64	61	64	62	56	64	58	53	64	54	49	64	51	46	63	48	0	62	45	0
				Exposed	64	64	64	64	64	64	64	64	64	64	64	64	64	62	64	64	59	64	64	56	64	64	54	64	62	50	64	58	47	0	54	0	0	51	0	0	48	0	0	45	0	0
		3:12	14.0	Non-Exposed	62	62	62	62	62	62	62	62	62	62	62	62	62	62	62	62	62	62	62	62	62	62	61	62	62	56	62	58	52	62	54	49	62	51	46	61	48	0	60	45	0
				Exposed	62	62	62	62	62	62	62	62	62	62	62	62	62	61	62	62	59	62	62	56	62	62	54	62	62	50	62	58	47	0	54	0	0	51	0	0	48	0	0	45	0	0
		4:12	18.4	Non-Exposed	62	62	62	62	62	62	62	62	62	62	62	62	62	62	62	62	62	62	62	62	62	62	61	62	62	56	62	57	52	62	54	49	62	51	46	61	48	0	60	45	0
				Exposed	62	62	62	62	62	62	62	62	62	62	62	62	62	61	62	62	59	62	62	56	62	62	54	62	62	50	62	57	47	0	54	0	0	51	0	0	48	0	0	45	0	0
		5:12	22.6	Non-Exposed	63	63	63	63	63	63	63	63	63	63	63	63	63	63	63	63	63	63	63	63	63	63	63	63	63	61	63	63	56	63	59	52	63	55	49	62	52	46	61	50	43
				Exposed	63	63	63	63	63	63	63	63	63	63	63	63	63	63	63	63	63	63	63	62	63	63	59	63	63	55	63	63	51	63	62	48	63	58	45	0	55	0	0	52	0	0
		6:12	26.6	Non-Exposed	65	65	65	65	65	65	65	65	65	65	65	65	65	65	65	65	65	65	65	65	65	65	65	65	65	61	65	63	56	65	59	52	64	55	49	63	52	46	62	49	43
				Exposed	65	65	65	65	65	65	65	65	65	65	65	65	65	65	65	65	64	65	65	62	65	65	59	65	65	55	65	65	51	65	62	48	0	58	45	0	55	0	0	52	0	0
		7:12	30.3	Non-Exposed	67	67	67	67	67	67	67	67	67	67	67	67	67	67	67	67	67	67	67	67	67	66	66	66	65	65	65	64	64	62	62	62	58	61	61	54	60	58	51	58	55	48
				Exposed	67	67	67	67	67	67	67	67	67	67	67	67	67	67	67	67	67	67	67	67	67	66	66	66	65	61	65	60	57	64	57	54	62	53	50	61	50	48	0	48	45	0
		8:12	33.7	Non-Exposed	70	70	70	70	70	70	70	70	70	70	70	70	70	70	70	70	70	70	69	69	69	68	68	68	67	67	67	65	65	62	64	64	58	62	62	54	61	58	51	60	55	48
				Exposed	70	70	70	70	70	70	70	70	70	70	70	70	70	70	70	70	70	70	69	69	69	68	66	68	65	61	67	60	57	65	56	54	64	53	50	62	50	48	0	47	45	0
		9:12	36.9	Non-Exposed	73	73	73	73	73	73	73	73	73	73	73	73	73	73	73	72	72	72	71	71	71	70	70	70	69	69	67	67	67	62	66	66	58	64	62	54	62	58	51	61	55	48
				Exposed	73	73	73	73	73	73	73	73	73	73	73	73	73	73	73	72	71	72	71	69	71	69	66	70	64	61	69	60	57	67	56	53	66	53	50	64	50	48	0	47	45	0
		10:12	39.8	Non-Exposed	77	77	77	77	77	77	77	77	77	76	76	76	75	75	75	74	74	74	73	73	73	73	73	72	71	71	67	69	69	62	67	65	58	66	62	54	64	58	51	62	55	48
				Exposed	77	77	77	77	77	77	77	77	77	76	76	76	75	75	75	74	71	74	72	68	73	69	66	73	64	61	71	60	57	69	56	53	67	53	50	66	50	47	0	47	45	0
		11:12	42.5	Non-Exposed	80	80	80	80	80	80	80	80	80	79	79	79	78	78	78	77	77	77	76	76	76	75	75	72	73	73	67	71	70	62	69	65	58	67	62	54	66	58	51	64	55	48
				Exposed	80	80	80	80	80	80	80	80	80	79	79	79	78	75	78	76	71	77	72	68	76	69	66	75	64	61	73	60	57	71	56	53	69	53	50	67	50	47	0	47	45	0
		12:12	45	Non-Exposed	82	82	82	82	82	82	82	82	82	82	82	82	81	81	81	80	80	79	79	79	75	77	77	72	75	75	66	73	70	62	71	65	57	69	61	54	67	58	51	65	55	48
				Exposed	82	82	82	82	82	82	82	82	82	82	79	82	80	75	81	76	71	80	72	68	79	69	66	77	64	61	75	60	57	73	56	53	71	53	50	69	50	47	0	47	45	0

Tamarack 2.3 Rail – Gable Flush-Mount on 30 Foot Maximum Mean Roof Height – Landscape – Panel Width = 40 Inches or Less

Ground Snow Load	Exposure Category	Roof Pitch	Roof Angle	Wind Speed (mph)	95			100			105			110			115			120			125			130			140			150			160			170			180			190		
				Roof Area	1	2	3	1	2	3	1	2	3	1	2	3	1	2	3	1	2	3	1	2	3	1	2	3	1	2	3	1	2	3	1	2	3	1	2	3	1	2	3	1	2	3
45	B	Flat	0	Non-Exposed	69	69	69	69	69	69	69	69	69	69	69	69	69	69	69	69	69	69	69	69	69	69	69	69	69	69	69	69	69	69	69	69	68	69	69	64	69	69	60	69	68	57
				Exposed	69	69	69	69	69	69	69	69	69	69	69	69	69	69	69	69	69	69	69	69	69	69	69	69	69	69	69	69	69	69	69	65	69	69	61	69	68	58	69	64	55	69
		1:12	4.8	Non-Exposed	64	64	64	64	64	64	64	64	64	64	64	64	64	64	64	64	64	64	64	64	64	64	64	64	64	64	64	64	64	64	64	64	64	64	64	64	64	64	60	64	64	57
				Exposed	64	64	64	64	64	64	64	64	64	64	64	64	64	64	64	64	64	64	64	64	64	64	64	64	64	64	64	64	64	64	64	64	64	64	61	64	64	58	64	64	55	64
		2:12	9.5	Non-Exposed	61	61	61	61	61	61	61	61	61	61	61	61	61	61	61	61	61	61	61	61	61	61	61	61	61	61	61	61	61	61	61	61	61	61	61	60	61	61	56	61	59	53
				Exposed	61	61	61	61	61	61	61	61	61	61	61	61	61	61	61	61	61	61	61	61	61	61	61	61	61	61	61	61	61	61	61	57	61	61	53	61	61	50	61	59	48	0
		3:12	14.0	Non-Exposed	58	58	58	58	58	58	58	58	58	58	58	58	58	58	58	58	58	58	58	58	58	58	58	58	58	58	58	58	58	58	58	58	58	58	58	58	58	58	56	58	58	53
				Exposed	58	58	58	58	58	58	58	58	58	58	58	58	58	58	58	58	58	58	58	58	58	58	58	58	58	58	58	58	58	58	58	57	58	58	53	58	58	50	58	58	48	0
		4:12	18.4	Non-Exposed	59	59	59	59	59	59	59	59	59	59	59	59	59	59	59	59	59	59	59	59	59	59	59	59	59	59	59	59	59	59	59	59	59	59	59	59	59	59	56	59	58	53
				Exposed	59	59	59	59	59	59	59	59	59	59	59	59	59	59	59	59	59	59	59	59	59	59	59	59	59	59	59	59	59	59	59	57	59	59	53	59	59	50	59	58	48	0
		5:12	22.6	Non-Exposed	60	60	60	60	60	60	60	60	60	60	60	60	60	60	60	60	60	60	60	60	60	60	60	60	60	60	60	60	60	60	60	60	60	60	60	60	60	60	60	60	60	57
				Exposed	60	60	60	60	60	60	60	60	60	60	60	60	60	60	60	60	60	60	60	60	60	60	60	60	60	60	60	60	60	60	60	60	60	60	58	60	60	55	60	60	52	60
		6:12	26.6	Non-Exposed	61	61	61	61	61	61	61	61	61	61	61	61	61	61	61	61	61	61	61	61	61	61	61	61	61	61	61	61	61	61	61	61	61	61	61	61	61	61	61	61	61	57
				Exposed	61	61	61	61	61	61	61	61	61	61	61	61	61	61	61	61	61	61	61	61	61	61	61	61	61	61	61	61	61	61	61	61	61	61	58	61	61	55	61	61	52	61
		7:12	30.3	Non-Exposed	64	64	64	64	64	64	64	64	64	64	64	64	64	64	64	64	64	64	64	64	64	64	64	64	64	64	64	64	64	64	64	64	64	64	64	64	63	63	63	62	62	62
				Exposed	64	64	64	64	64	64	64	64	64	64	64	64	64	64	64	64	64	64	64	64	64	64	64	64	64	64	64	64	64	64	64	64	64	64	61	64	63	58	64	61	55	64
		8:12	33.7	Non-Exposed	66	66	66	66	66	66	66	66	66	66	66	66	66	66	66	66	66	66	66	66	66	66	66	66	66	66	66	66	66	66	66	66	66	66	66	66	65	65	65	64	64	64
				Exposed	66	66	66	66	66	66	66	66	66	66	66	66	66	66	66	66	66	66	66	66	66	66	66	66	66	66	66	66	66	66	66	66	66	65	65	65	64	61	64	61	58	63
		9:12	36.9	Non-Exposed	69	69	69	69	69	69	69	69	69	69	69	69	69	69	69	69	69	69	69	69	69	69	69	69	69	69	69	69	69	69	69	69	68	68	68	66	66	66	65	65	63	63
				Exposed	69	69	69	69	69	69	69	69	69	69	69	69	69	69	69	69	69	69	69	69	69	69	69	69	69	69	69	69	69	69	69	69	68	65	68	65	61	66	61	58	65	63
		10:12	39.8	Non-Exposed	73	73	73	73	73	73	73	73	73	73	73	73	73	73	73	73	73	73	73	73	73	73	73	73	73	73	73	72	72	72	71	71	71	70	70	70	69	69	69	68	68	67
				Exposed	73	73	73	73	73	73	73	73	73	73	73	73	73	73	73	73	73	73	73	73	73	73	73	73	73	73	73	72	72	72	71	69	71	68	65	70	65	61	69	64	58	67
		11:12	42.5	Non-Exposed	77	77	77	77	77	77	77	77	77	77	77	77	77	77	77	77	77	77	77	77	77	77	77	77	76	76	76	75	75	75	73	73	73	72	72	71	71	71	67	69	69	63
				Exposed	77	77	77	77	77	77	77	77	77	77	77	77	77	77	77	77	77	77	77	77	77	77	77	77	76	76	76	75	74	75	73	69	73	68	65	72	64	61	71	61	58	69
		12:12	45	Non-Exposed	80	80	80	80	80	80	80	80	80	80	80	80	80	80	80	80	80	80	80	80	80	80	80	80	79	79	79	78	78	78	76	76	76	75	75	71	73	73	67	72	71	63
				Exposed	80	80	80	80	80	80	80	80	80	80	80	80	80	80	80	80	80	80	80	80	80	80	80	80	79	79	79	78	74	78	73	69	76	68	65	75	64	61	73	61	58	72
	C	Flat	0	Non-Exposed	69	69	69	69	69	69	69	69	69	69	69	69	69	69	69	69	69	69	69	69	69	69	69	69	69	69	66	69	69	61	69	68	57	69	64	54	69	60	51	69	57	48
				Exposed	69	69	69	69	69	69	69	69	69	69	69	69	69	69	69	69	69	69	69	69	69	69	68	69	69	63	69	69	59	69	64	55	69	60	52	0	57	49	0	54	46	0
		1:12	4.8	Non-Exposed	64	64	64	64	64	64	64	64	64	64	64	64	64	64	64	64	64	64	64	64	64	64	64	64	64	64	64	64	64	61	64	64	57	64	64	54	64	60	51	64	57	48
				Exposed	64	64	64	64	64	64	64	64	64	64	64	64	64	64	64	64	64	64	64	64	64	64	64	64	64	63	64	64	59	64	64	55	64	60	52	0	57	49	0	54	46	0
		2:12	9.5	Non-Exposed	61	61	61	61	61	61	61	61	61	61	61	61	61	61	61	61	61	61	61	61	61	61	61	61	61	61	61	61	61	57	61	59	54	61	55	50	61	52	48	61	49	45
				Exposed	61	61	61	61	61	61	61	61	61	61	61	61	61	61	61	61	61	61	61	61	61	61	59	61	61	55	61	61	51	61	59	48	0	55	45	0	52	0	0	49	0	0
		3:12	14.0	Non-Exposed	58	58	58	58	58	58	58	58	58	58	58	58	58	58	58	58	58	58	58	58	58	58	58	58	58	58	58	58	58	57	58	58	54	58	55	50	58	52	47	58	49	45
				Exposed	58	58	58	58	58	58	58	58	58	58	58	58	58	58	58	58	58	58	58	58	58	58	58	58	58	55	58	58	51	58	58	48	0	55	45	0	52	0	0	49	0	0
		4:12	18.4	Non-Exposed	59	59	59	59	59	59	59	59	59	59	59	59	59	59	59	59	59	59	59	59	59	59	59	59	59	59	59	59	59	57	59	59	53	59	55	50	59	52	47	59	49	45
				Exposed	59	59	59	59	59	59	59	59	59	59	59	59	59	59	59	59	59	59	59	59	59	59	59	59	59	55	59	59	51	59	59	48	0	55	45	0	52	0	0	49	0	0
		5:12	22.6	Non-Exposed	60	60	60	60	60	60	60	60	60	60	60	60	60	60	60	60	60	60	60	60	60	60	60	60	60	60	60	60	60	60	60	60	58	60	60	54	60	57	50	60	54	47
				Exposed	60	60	60	60	60	60	60	60	60	60	60	60	60	60	60	60	60	60	60	60	60	60	60	60	60	60	60	60	56	60	60	52	60	60	49	60	60	46	0	57	0	0
45		6:12	26.6	Non-Exposed	61	61	61	61	61	61	61	61	61	61	61	61	61	61	61	61	61	61	61	61	61	61	61	61	61	61	61	61	61	61	61	61	58	61	60	54	61	57	50	61	54	47
				Exposed	61	61	61	61	61	61	61	61	61	61	61	61	61	61	61	61	61	61	61	61	61	61	61	61	61	60	61	61	56	61	61	52	61	61	49	61	60	46	0	57	0	0
		7:12	30.3	Non-Exposed	64	64	64	64	64	64	64	64	64	64	64	64	64	64	64	64	64	64	64	64	64	64	64	64	64	64	64	63	63	63	62	62	62	61	61	59	60	60	56	58	58	53
				Exposed	64	64	64	64	64	64	64	64	64	64	64	64	64	64	64	64	64	64	64	64	64	64	64	64	64	63	62	63	62	63	62	58	62	58	55	61	55	52	60	52	49	0
		8:12	33.7	Non-Exposed	66	66	66	66	66	66	66	66	66	66	66	66	66	66	66	66	66	66	66	66	66	66	66	66	66	65	65	65	63	63	63	62	62	59	61	61	56	60	60	52
				Exposed	66	66	66	66	66	66	66	66	66	66	66	66	66	66	66	66	66	66	66	66	66	66	66	66	66	65	62	65	61	58	63	58	55	62	55	52	61	52	49	0
		9:12	36.9	Non-Exposed	69	69	69	69	69	69	69	69	69	69	69	69	69	69	69	69	69	69	69	69	69	69	69	69	68	68	68	67	67	67	65	65	63	64	64	59	63	63	56	61	60	52
				Exposed	69	69	69	69	69	69	69	69	69	69	69	69	69	69	69	69	69	69	69	69	69	69	69	69	68	67	68	65	62	67	61	58	65	58	55	64	55	52	63	52	49	0
		10:12	39.8	Non-Exposed	73	73	73	73	73	73	73	73	73	73	73	73	73	73	73	73	73	73	72	72	72	72	72	72	70	70	70	69	69	68	67	67	63	66	66	59	65	63	56	63	60	52
				Exposed	73	73	73	73	73	73	73	73	73	73	73	73	73	73	73	73	73	73	72	72	72	72	72	72	70	66	70	65	62	69	61	58	67	58	55	66	54	52	65	52	49	0
		11:12	42.5	Non-Exposed	77	77	77	77	77	77	77	77	77	77	77	77	77	77	77	76	76	76	75	75	75	74	74	74	73	73	73	71	71	68	69	69	63	68	67	59	66	63	55	65	60	52
				Exposed	77	77	77	77	77	77	77	77	77	77	77	77	77	77	77	76	76	76	75	75	75	74	71	74	70	66	73	65	62	71	61	58	69	58	55	68	54	52	66	52	49	0
		12:12	45	Non-Exposed	80	80	80	80	80	80	80	80	80	80	80	80	80	80	80	79	79	79	78	78	78	77	77	77	75	75	73	73	73	68	72	71	63	70	67	59	68	63	55	67	60	52
				Exposed	80	80	80	80	80	80	80	80	80	80	80	80	80	80	80	79	78	79	78	75	78	76	71	77	70	66	75	65	62	73	61	58	72	58	55	70	54	52	68	52	49	0
	D	Flat	0	Non-Exposed	69	69	69	69	69	69	69	69	69	69	69	69	69	69	69	69	69	69	69	69	68	69	69	65	69	69	60	69	66	56	69	62	52	69	58	49	69	55	46	69	52	0
				Exposed	69	69	69	69	69	69	69	69	69	69	69	69	69	69	69	69	69	69	65	69	69	62	69	68	58	69	63	54	69	59	50	0	55	47	0	52	45	0	49	0	0
		1:12	4.8	Non-Exposed	64	64	64	64	64	64	64	64	64	64	64	64	64	64	64	64	64	64	64	64	64	64	64	64	64	64	60	64	64	56	64	62	52	64	58	49	64	55	46	64	52	0
				Exposed	64	64	64	64	64	64	64	64	64	64	64	64	64	64	64	64	64	64	64	64	64	62	64	64	58	64	63	54	64	59	50	0	55	47	0	52	45	0	49	0	0
		2:12	9.5	Non-Exposed	61	61	61	61	61	61	61	61	61	61	61	61	61	61	61	61	61	61	61	61	61	61	61	61	61	61	56	61	58	53	61	54	49	61	51	46	61	48	0	60	45	0
				Exposed	61	61	61	61	61	61	61	61	61	61	61	61	61	61	61	61	61	59	61	61	56	61	61	54	61	61	50	61	58	47	0	54	0	0	51	0	0	48	0	0	45	0
		3:12	14.0	Non-Exposed	58	58	58	58	58	58	58	58	58	58	58	58	58	58	58	58	58	58	58	58	58	58	58	58	58	58	56	58	58	52	58	54	49	58	51	46	58	48	0	58	45	0
				Exposed	58	58	58	58	58	58	58	58	58	58	58	58	58	58	58	58	58	56	58	58	54	58	58	50	58	58	47	0	54	0	0	51	0	0	48	0	0	45	0	0	45	0
		4:12	18.4	Non-Exposed	59	59	59	59	59	59	59	59	59	59	59	59	59	59	59	59	59	59	59	59	59	59	59	59	59	59	56	59	57	52	59	54	49	59	51	46	59	48	0	58	45	0
				Exposed	59	59	59	59	59	59	59	59	59	59	59	59	59	59	59	59	59	56	59	59	54	59	59	50	59	57	47	0	54	0	0	51	0	0	48	0	0	45	0	0	45	0
		5:12	22.6	Non-Exposed	60	60	60	60	60	60	60	60	60	60	60	60	60	60	60	60	60	60	60	60	60	60	60	60	60	60	60	60	60	56	60	59	52	60	55	49	60	52	46	59	50	43
				Exposed	60	60	60	60	60	60	60	60	60	60	60	60	60	60	60	60	60	60	60	60	60	59	60	60	55	60	60	51	60	60	48	60	58	45	0	55	0	0	52	0	0
		6:12	26.6	Non-Exposed	61	61	61	61	61	61	61	61	61	61	61	61	61	61	61	61	61	61	61	61	61	61	61	61	61	61	61	61	61	56	61	59	52	61	55	49	61	52	46	60	49	43
				Exposed	61	61	61	61	61	61	61	61	61	61	61	61	61	61	61	61	61	61	61	61	61	59	61	61	55	61	61	51	61	61	48	0	58	45	0	55	0	0	52	0	0
		7:12	30.3	Non-Exposed	64	64	64	64	64	64	64	64	64	64	64	64	64	64	64	64	64	64	64	64	64	64	64	64	63	63	63	61	61	61	60	60	58	59	59	54	58	58	51	57	55	48
				Exposed	64	64	64	64	64	64	64	64	64	64	64	64	64	64	64	64	64	64	64	64	64	64	64	64	63	61	63	60	57	61	57	54	60	53	50	59	50	48	0	48	45	0
		8:12	33.7	Non-Exposed	66	66	66	66	66	66	66	66	66	66	66	66	66	66	66	66	66	66	66	66	66	66	66	66	64	64	64	63	63	62	62	62	58	60	60	54	59	58	51	58	55	48
				Exposed	66	66	66	66	66	66	66	66	66	66	66	66	66	66	66	66	66	66	66	66	66	66	66	66	64	61	64	60	57	63	56	54	62	53	50	60	50	48	0	47	45	0
		9:12	36.9	Non-Exposed	69	69	69	69	69	69	69	69	69	69	69	69	69	69	69	69	69	69	68	68	68	68	68	68	66	66	66	65	65	62	64	64	58	62	62	54	61	58	51	59	55	48
				Exposed	69	69	69	69	69	69	69	69	69	69	69	69	69	69	69	69	69	69	68	68	68	66	68	68	64	61	66	60	57	65	56	53	64	53	50	62	50	48	0	47	45	0
		10:12	39.8	Non-Exposed	73	73	73	73	73	73	73	73	73	73	73	73	72	72	72	72	72	72	71	71	71	70	70	70	68	68	67	67	67	62	65	65	58	64	62	54	62	58	51	61	55	48
				Exposed	73	73	73	73	73	73	73	73	73	73	73	73	72	72	72	72	71	72	71	68	71	69	66	70	64	61	68	60	57	67	56	53	65	53	50	64	50	47	0	47	45	0
		11:12	42.5	Non-Exposed	77	77	77	77	77	77	77	77	77	76	76	76	75	75	75	74	74	74	73	73	73	72	72	72	71	71	67	69	69	62	67	65	58	66	62	54	64	58	51	62	55	48
				Exposed	77	77	77	77	77	77	77	77	77	76	76	76	75	75	75	74	71	74	72	68	73	69	66	72	64	61	71	60	57	69	56	53	67	53	50	66	50	47	0	47	45	0
		12:12	45	Non-Exposed	80	80	80	80	80	80	80	80	80	79	79	79	78	78	78	77	77	77	76	76	75	75	75	72	73	73	66	71	70	62	69	65	57	67	61	54	66	58	51	64	55	48
				Exposed	80	80	80	80	80	80	80	80	80	79	79	79	78	75	78	76	71	77	72	68	76	69	66	75	64	61	73	60	57	71	56	53	69	53	50	67	50	47	0	47	45	0

Tamarack 2.3 Rail – Gable Flush-Mount on 30 Foot Maximum Mean Roof Height – Landscape – Panel Width = 40 Inches or Less

Ground Snow Load	Exposure Category	Roof Pitch	Roof Angle	Wind Speed (mph)	95			100			105			110			115			120			125			130			140			150			160			170			180			190		
				Roof Area	1	2	3	1	2	3	1	2	3	1	2	3	1	2	3	1	2	3	1	2	3	1	2	3	1	2	3	1	2	3	1	2	3	1	2	3	1	2	3	1	2	3
50	B	Flat	0	Non-Exposed	66	66	66	66	66	66	66	66	66	66	66	66	66	66	66	66	66	66	66	66	66	66	66	66	66	66	66	66	66	66	66	66	66	66	66	64	66	66	60	66	66	57
				Exposed	66	66	66	66	66	66	66	66	66	66	66	66	66	66	66	66	66	66	66	66	66	66	66	66	66	66	66	66	66	66	66	65	66	66	61	66	66	58	66	64	55	66
		1:12	4.8	Non-Exposed	61	61	61	61	61	61	61	61	61	61	61	61	61	61	61	61	61	61	61	61	61	61	61	61	61	61	61	61	61	61	61	61	61	61	61	61	61	61	60	61	61	57
				Exposed	61	61	61	61	61	61	61	61	61	61	61	61	61	61	61	61	61	61	61	61	61	61	61	61	61	61	61	61	61	61	61	61	61	61	61	61	61	58	61	61	55	61
		2:12	9.5	Non-Exposed	58	58	58	58	58	58	58	58	58	58	58	58	58	58	58	58	58	58	58	58	58	58	58	58	58	58	58	58	58	58	58	58	58	58	58	58	58	58	56	58	58	53
				Exposed	58	58	58	58	58	58	58	58	58	58	58	58	58	58	58	58	58	58	58	58	58	58	58	58	58	58	58	58	58	58	58	57	58	58	53	58	58	50	58	58	48	0
		3:12	14.0	Non-Exposed	56	56	56	56	56	56	56	56	56	56	56	56	56	56	56	56	56	56	56	56	56	56	56	56	56	56	56	56	56	56	56	56	56	56	56	56	56	56	56	56	56	53
				Exposed	56	56	56	56	56	56	56	56	56	56	56	56	56	56	56	56	56	56	56	56	56	56	56	56	56	56	56	56	56	56	56	56	56	56	53	56	56	50	56	56	48	0
		4:12	18.4	Non-Exposed	56	56	56	56	56	56	56	56	56	56	56	56	56	56	56	56	56	56	56	56	56	56	56	56	56	56	56	56	56	56	56	56	56	56	56	56	56	56	56	56	56	53
				Exposed	56	56	56	56	56	56	56	56	56	56	56	56	56	56	56	56	56	56	56	56	56	56	56	56	56	56	56	56	56	56	56	56	56	56	53	56	56	50	56	56	48	0
		5:12	22.6	Non-Exposed	57	57	57	57	57	57	57	57	57	57	57	57	57	57	57	57	57	57	57	57	57	57	57	57	57	57	57	57	57	57	57	57	57	57	57	57	57	57	57	57	57	57
				Exposed	57	57	57	57	57	57	57	57	57	57	57	57	57	57	57	57	57	57	57	57	57	57	57	57	57	57	57	57	57	57	57	57	57	57	57	57	57	55	57	57	52	57
		6:12	26.6	Non-Exposed	59	59	59	59	59	59	59	59	59	59	59	59	59	59	59	59	59	59	59	59	59	59	59	59	59	59	59	59	59	59	59	59	59	59	58	59	59	55	59	59	55	59
				Exposed	59	59	59	59	59	59	59	59	59	59	59	59	59	59	59	59	59	59	59	59	59	59	59	59	59	59	59	59	56	59	59	52	59	59	49	59	59	46	0	57	0	0
		7:12	30.3	Non-Exposed	61	61	61	61	61	61	61	61	61	61	61	61	61	61	61	61	61	61	61	61	61	61	61	61	61	61	61	61	61	61	60	60	60	60	60	60	60	60	60	60	60	60
				Exposed	61	61	61	61	61	61	61	61	61	61	61	61	61	61	61	61	61	61	61	61	61	61	61	61	61	61	61	61	61	61	60	60	60	60	60	60	60	60	60	60	60	60
		8:12	33.7	Non-Exposed	63	63	63	63	63	63	63	63	63	63	63	63	63	63	63	63	63	63	63	63	63	63	63	63	63	63	63	63	63	63	62	62	62	62	62	62	62	62	62	62	62	62
				Exposed	63	63	63	63	63	63	63	63	63	63	63	63	63	63	63	63	63	63	63	63	63	63	63	63	63	63	63	63	63	63	62	62	62	62	62	62	62	61	62	61	61	61
		9:12	36.9	Non-Exposed	66	66	66	66	66	66	66	66	66	66	66	66	66	66	66	66	66	66	66	66	66	66	66	66	66	66	66	66	66	66	65	65	65	65	65	65	65	65	65	65	65	65
				Exposed	66	66	66	66	66	66	66	66	66	66	66	66	66	66	66	66	66	66	66	66	66	66	66	66	66	66	66	66	66	66	65	65	65	65	65	65	65	65	65	65	65	65
		10:12	39.8	Non-Exposed	70	70	70	70	70	70	70	70	70	70	70	70	70	70	70	70	70	70	70	70	70	70	70	70	70	70	70	69	69	69	68	68	68	67	67	67	65	65	63	64	64	59
				Exposed	70	70	70	70	70	70	70	70	70	70	70	70	70	70	70	70	70	70	70	70	70	69	69	69	68	66	68	65	62	67	61	58	65	58	55	64	54	52	63	52	49	0
		11:12	42.5	Non-Exposed	73	73	73	73	73	73	73	73	73	73	73	73	73	73	73	73	73	73	73	73	73	72	72	72	70	70	70	69	69	68	68	68	63	66	66	59	65	63	55	63	60	52
				Exposed	73	73	73	73	73	73	73	73	73	73	73	73	73	73	73	73	73	73	73	73	73	72	71	72	70	66	70	65	62	69	61	58	68	58	55	66	54	52	65	52	49	0
		12:12	45	Non-Exposed	77	77	77	77	77	77	77	77	77	77	77	77	77	77	77	76	76	76	75	75	75	75	75	75	73	73	73	71	71	68	70	70	63	68	67	59	67	63	55	65	60	52
				Exposed	77	77	77	77	77	77	77	77	77	77	77	77	77	77	77	76	76	76	75	75	75	75	71	75	70	66	73	65	62	71	61	58	70	58	55	68	54	52	67	52	49	0
	C	Flat	0	Non-Exposed	66	66	66	66	66	66	66	66	66	66	66	66	66	66	66	66	66	66	66	66	66	66	66	66	66	66	66	66	66	61	66	66	57	66	64	54	66	60	51	66	57	48
				Exposed	66	66	66	66	66	66	66	66	66	66	66	66	66	66	66	66	66	66	66	66	66	66	66	66	66	63	66	66	59	66	64	55	66	60	52	0	57	49	0	54	46	0
		1:12	4.8	Non-Exposed	61	61	61	61	61	61	61	61	61	61	61	61	61	61	61	61	61	61	61	61	61	61	61	61	61	61	61	61	61	61	61	61	57	61	61	54	61	60	51	61	57	48
				Exposed	61	61	61	61	61	61	61	61	61	61	61	61	61	61	61	61	61	61	61	61	61	61	61	61	61	61	61	61	59	61	61	55	61	60	52	0	57	49	0	54	46	0
		2:12	9.5	Non-Exposed	58	58	58	58	58	58	58	58	58	58	58	58	58	58	58	58	58	58	58	58	58	58	58	58	58	58	58	58	58	57	58	58	54	58	55	50	58	52	48	58	49	45
				Exposed	58	58	58	58	58	58	58	58	58	58	58	58	58	58	58	58	58	58	58	58	58	58	58	58	58	55	58	58	51	58	58	48	0	55	45	0	52	0	0	49	0	0
		3:12	14.0	Non-Exposed	56	56	56	56	56	56	56	56	56	56	56	56	56	56	56	56	56	56	56	56	56	56	56	56	56	56	56	56	56	56	56	56	54	56	55	50	56	52	47	56	49	45
				Exposed	56	56	56	56	56	56	56	56	56	56	56	56	56	56	56	56	56	56	56	56	56	56	56	56	56	55	56	56	51	56	56	48	0	55	45	0	52	0	0	49	0	0
		4:12	18.4	Non-Exposed	56	56	56	56	56	56	56	56	56	56	56	56	56	56	56	56	56	56	56	56	56	56	56	56	56	56	56	56	56	56	56	56	53	56	55	50	56	52	47	56	49	45
				Exposed	56	56	56	56	56	56	56	56	56	56	56	56	56	56	56	56	56	56	56	56	56	56	56	56	56	55	56	56	51	56	56	48	0	55	45	0	52	0	0	49	0	0
		5:12	22.6	Non-Exposed	57	57	57	57	57	57	57	57	57	57	57	57	57	57	57	57	57	57	57	57	57	57	57	57	57	57	57	57	57	57	57	57	57	57	57	54	57	57	50	57	54	47
				Exposed	57	57	57	57	57	57	57	57	57	57	57	57	57	57	57	57	57	57	57	57	57	57	57	57	57	57	57	57	56	57	57	52	57	57	49	57	57	46	0	57	0	0
		6:12	26.6	Non-Exposed	59	59	59	59	59	59	59	59	59	59	59	59	59	59	59	59	59	59	59	59	59	59	59	59	59	59	59	59	59	59	59	59	58	59	59	54	59	57	50	59	54	47
				Exposed	59	59	59	59	59	59	59	59	59	59	59	59	59	59	59	59	59	59	59	59	59	59	59	59	59	59	59	59	56	59	59	52	59	59	49	59	59	46	0	57	0	0
		7:12	30.3	Non-Exposed	61	61	61	61	61	61	61	61	61	61	61	61	61	61	61	61	61	61	61	61	61	61	61	61	61	61	61	61	61	61	60	60	60	59	59	59	58	58	56	57	57	53
				Exposed	61	61	61	61	61	61	61	61	61	61	61	61	61	61	61	61	61	61	61	61	61	61	61	61	61	61	61	61	61	61	60	58	60	58	55	59	55	52	58	52	49	0
		8:12	33.7	Non-Exposed	63	63	63	63	63	63	63	63	63	63	63	63	63	63	63	63	63	63	63	63	63	63	63	63	63	63	63	63	63	63	61	61	61	60	60	59	59	59	56	58	58	52
				Exposed	63	63	63	63	63	63	63	63	63	63	63	63	63	63	63	63	63	63	63	63	63	63	63	63	63	63	63	63	62	63	61	58	61	58	55	60	55	52	59	52	49	0
		9:12	36.9	Non-Exposed	66	66	66	66	66	66	66	66	66	66	66	66	66	66	66	66	66	66	66	66	66	66	66	66	66	66	66	65	65	65	63	63	63	62	62	59	61	61	56	60	60	52
				Exposed	66	66	66	66	66	66	66	66	66	66	66	66	66	66	66	66	66	66	66	66	66	66	66	66	66	66	66	65	62	65	61	58	63	58	55	62	55	52	61	52	49	0
		10:12	39.8	Non-Exposed	70	70	70	70	70	70	70	70	70	70	70	70	70	70	70	70	70	70	70	70	70	69	69	69	68	68	68	67	67	67	65	65	63	64	64	59	63	63	56	61	60	52
				Exposed	70	70	70	70	70	70	70	70	70	70	70	70	70	70	70	70	70	70	70	70	70	69	69	69	68	66	68	65	62	67	61	58	65	58	55	64	54	52	63	52	49	0
		11:12	42.5	Non-Exposed	73	73	73	73	73	73	73	73	73	73	73	73	73	73	73	73	73	73	73	73	73	72	72	72	70	70	70	69	69	68	68	68	63	66	66	59	65	63	55	63	60	52
				Exposed	73	73	73	73	73	73	73	73	73	73	73	73	73	73	73	73	73	73	73	73	73	72	71	72	70	66	70	65	62	69	61	58	68	58	55	66	54	52	65	52	49	0
		12:12	45	Non-Exposed	77	77	77	77	77	77	77	77	77	77	77	77	77	77	77	76	76	76	75	75	75	75	75	75	73	73	73	71	71	68	70	70	63	68	67	59	67	63	55	65	60	52
				Exposed	77	77	77	77	77	77	77	77	77	77	77	77	77	77	77	76	76	76	75	75	75	75	71	75	70	66	73	65	62	71	61	58	70	58	55	68	54	52	67	52	49	0
	D	Flat	0	Non-Exposed	66	66	66	66	66	66	66	66	66	66	66	66	66	66	66	66	66	66	66	66	66	66	66	65	66	66	60	66	66	56	66	62	52	66	58	49	66	55	46	66	52	0
				Exposed	66	66	66	66	66	66	66	66	66	66	66	66	66	66	66	66	66	66	66	65	66	66	62	66	66	58	66	63	54	66	59	50	0	55	47	0	52	45	0	49	0	0
		1:12	4.8	Non-Exposed	61	61	61	61	61	61	61	61	61	61	61	61	61	61	61	61	61	61	61	61	61	61	61	61	61	61	60	61	61	56	61	61	52	61	58	49	61	55	46	61	52	0
				Exposed	61	61	61	61	61	61	61	61	61	61	61	61	61	61	61	61	61	61	61	61	61	61	61	61	61	58	61	61	54	61	59	50	0	55	47	0	52	45	0	49	0	0
		2:12	9.5	Non-Exposed	58	58	58	58	58	58	58	58	58	58	58	58	58	58	58	58	58	58	58	58	58	58	58	58	58	58	56	58	58	53	58	54	49	58	51	46	58	48	0	58	45	0
				Exposed	58	58	58	58	58	58	58	58	58	58	58	58	58	58	58	58	58	58	58	56	58	58	54	58	58	50	58	58	47	0	54	0	0	51	0	0	48	0	0	45	0	0
		3:12	14.0	Non-Exposed	56	56	56	56	56	56	56	56	56	56	56	56	56	56	56	56	56	56	56	56	56	56	56	56	56	56	56	56	56	52	56	54	49	56	51	46	56	48	0	56	45	0
				Exposed	56	56	56	56	56	56	56	56	56	56	56	56	56	56	56	56	56	56	56	56	56	56	54	56	56	50	56	56	47	0	54	0	0	51	0	0	48	0	0	45	0	0
		4:12	18.4	Non-Exposed	56	56	56	56	56	56	56	56	56	56	56	56	56	56	56	56	56	56	56	56	56	56	56	56	56	56	56	56	56	52	56	54	49	56	51	46	56	48	0	56	45	0
				Exposed	56	56	56	56	56	56	56	56	56	56	56	56	56	56	56	56	56	56	56	56	56	56	54	56	56	50	56	56	47	0	54	0	0	51	0	0	48	0	0	45	0	0
		5:12	22.6	Non-Exposed	57	57	57	57	57	57	57	57	57	57	57	57	57	57	57	57	57	57	57	57	57	57	57	57	57	57	57	57	57	56	57	57	52	57	55	49	57	52	46	57	50	43
				Exposed	57	57	57	57	57	57	57	57	57	57	57	57	57	57	57	57	57	57	57	57	57	57	57	57	57	55	57	57	51	57	57	48	57	57	45	0	55	0	0	52	0	0
		6:12	26.6	Non-Exposed	59	59	59	59	59	59	59	59	59	59	59	59	59	59	59	59	59	59	59	59	59	59	59	59	59	59	59	59	59	56	59	59	52	59	55	49	59	52	46	58	49	43
				Exposed	59	59	59	59	59	59	59	59	59	59	59	59	59	59	59	59	59	59	59	59	59	59	59	59	59	55	59	59	51	59	59	48	0	58	45	0	55	0	0	52	0	0
		7:12	30.3	Non-Exposed	61	61	61	61	61	61	61	61	61	61	61	61	61	61	61	61	61	61	61	61	61	61	61	61	60	60	60	59	59	59	58	58	58	57	57	54	56	56	51	55	55	48
				Exposed	61	61	61	61	61	61	61	61	61	61	61	61	61	61	61	61	61	61	61	61	61	61	61	61	60	60	60	59	57	59	57	54	58	53	50	57	50	48	0	48	45	0
		8:12	33.7	Non-Exposed	63	63	63	63	63	63	63	63	63	63	63	63	63	63	63	63	63	63	63	63	63	63	63	63	62	62	62	61	61	61	60	60	58	59	59	54	58	58	51	56	55	48
				Exposed	63	63	63	63	63	63	63	63	63	63	63	63	63	63	63	63	63	63	63	63	63	63	63	63	62	61	62	60	57	61	56	54	60	53	50	59	50	48	0	47	45	0
		9:12	36.9	Non-Exposed	66	66	66	66	66	66	66	66	66	66	66	66	66	66	66	66	66	66	66	66	66	66	66	66	64	64	64	63	63	62	62	62	58	60	60	54	59	58	51	58	55	48
				Exposed	66	66	66	66	66	66	66	66	66	66	66	66	66	66	66	66	66	66	66	66	66	66	66	66	64	61	64	60	57	63	56	53	62	53	50	60	50	48	0	47	45	0
		10:12	39.8	Non-Exposed	70	70	70	70	70	70	70	70	70	70	70	70	70	70	70	70	69	69	69	69	69	68	68	68	66	66	66	65	65	62	64	64	58	62	62	54	61	58	51	59	55	48
				Exposed	70	70	70	70	70	70	70	70	70	70	70	70	70	70	70	70	69	69	69	69	69	68	69	68	66	68	64	61	66	60	57	65	56	53	64	53	50	62	50	47	0	47	45	0
		11:12	42.5	Non-Exposed	73	73	73	73	73	73	73	73	73	73	73	73	73	73	73	72	72	72	71	71	71	70	70	70	69	69	67	67	67	62	66	65	58	64	62	54	62	58	51	61	55	48
				Exposed	73	73	73	73	73	73	73	73	73	73	73	73	73	73	73	72	71	72	71	68	71	69	66	70	64	61	69	60	57	67	56	53	66	53	50	64	50	47	0	47	45	0
		12:12	45	Non-Exposed	77	77	77	77	77	77	77	77	77	76	76	76	75	75	75	75	75	75	74	74	74	73	73	72	71	71	66	69	69	62	68	65	57	66	61	54	64	58	51	63	55	48
				Exposed	77	77	77	77	77	77	77	77	77	76	76	76	75	75	75	75	71	75	72	68	74	69	66	73	64	61	71	60	57	69	56	53	68	53	50	66	50	47	0	47	45	0

Tamarack 2.3 Rail – Gable Flush-Mount on 30 Foot Maximum Mean Roof Height – Landscape – Panel Width = 40 Inches or Less

Ground Snow Load	Exposure Category	Roof Pitch	Roof Angle	Wind Speed (mph)	95			100			105			110			115			120			125			130			140			150			160			170			180			190		
				Roof Area	1	2	3	1	2	3	1	2	3	1	2	3	1	2	3	1	2	3	1	2	3	1	2	3	1	2	3	1	2	3	1	2	3	1	2	3	1	2	3	1	2	3
55	B	Flat	0	Non-Exposed	63	63	63	63	63	63	63	63	63	63	63	63	63	63	63	63	63	63	63	63	63	63	63	63	63	63	63	63	63	63	63	63	63	63	63	63	63	63	60	63	63	57
				Exposed	63	63	63	63	63	63	63	63	63	63	63	63	63	63	63	63	63	63	63	63	63	63	63	63	63	63	63	63	63	63	63	63	63	63	61	63	63	58	63	63	55	63
		1:12	4.8	Non-Exposed	58	58	58	58	58	58	58	58	58	58	58	58	58	58	58	58	58	58	58	58	58	58	58	58	58	58	58	58	58	58	58	58	58	58	58	58	58	58	58	58	58	57
				Exposed	58	58	58	58	58	58	58	58	58	58	58	58	58	58	58	58	58	58	58	58	58	58	58	58	58	58	58	58	58	58	58	58	58	58	58	58	58	58	58	58	55	58
		2:12	9.5	Non-Exposed	55	55	55	55	55	55	55	55	55	55	55	55	55	55	55	55	55	55	55	55	55	55	55	55	55	55	55	55	55	55	55	55	55	55	55	55	55	55	55	55	55	53
				Exposed	55	55	55	55	55	55	55	55	55	55	55	55	55	55	55	55	55	55	55	55	55	55	55	55	55	55	55	55	55	55	55	55	55	55	53	55	55	50	55	55	48	0
		3:12	14.0	Non-Exposed	53	53	53	53	53	53	53	53	53	53	53	53	53	53	53	53	53	53	53	53	53	53	53	53	53	53	53	53	53	53	53	53	53	53	53	53	53	53	53	53	53	53
				Exposed	53	53	53	53	53	53	53	53	53	53	53	53	53	53	53	53	53	53	53	53	53	53	53	53	53	53	53	53	53	53	53	53	53	53	53	53	53	50	53	53	48	0
		4:12	18.4	Non-Exposed	53	53	53	53	53	53	53	53	53	53	53	53	53	53	53	53	53	53	53	53	53	53	53	53	53	53	53	53	53	53	53	53	53	53	53	53	53	53	53	53	53	53
				Exposed	53	53	53	53	53	53	53	53	53	53	53	53	53	53	53	53	53	53	53	53	53	53	53	53	53	53	53	53	53	53	53	53	53	53	53	53	53	50	53	53	48	0
		5:12	22.6	Non-Exposed	54	54	54	54	54	54	54	54	54	54	54	54	54	54	54	54	54	54	54	54	54	54	54	54	54	54	54	54	54	54	54	54	54	54	54	54	54	54	54	54	54	54
				Exposed	54	54	54	54	54	54	54	54	54	54	54	54	54	54	54	54	54	54	54	54	54	54	54	54	54	54	54	54	54	54	54	54	54	54	54	54	54	54	54	54	52	54
		6:12	26.6	Non-Exposed	56	56	56	56	56	56	56	56	56	56	56	56	56	56	56	56	56	56	56	56	56	56	56	56	56	56	56	56	56	56	56	56	56	56	56	56	56	56	56	56	56	56
				Exposed	56	56	56	56	56	56	56	56	56	56	56	56	56	56	56	56	56	56	56	56	56	56	56	56	56	56	56	56	56	56	56	56	56	56	56	56	56	55	56	56	52	56
		7:12	30.3	Non-Exposed	58	58	58	58	58	58	58	58	58	58	58	58	58	58	58	58	58	58	58	58	58	58	58	58	58	58	58	58	58	58	58	58	58	58	58	58	58	58	58	58	58	58
				Exposed	58	58	58	58	58	58	58	58	58	58	58	58	58	58	58	58	58	58	58	58	58	58	58	58	58	58	58	58	58	58	58	58	58	58	58	58	58	58	58	58	58	58
		8:12	33.7	Non-Exposed	61	61	61	61	61	61	61	61	61	61	61	61	61	61	61	61	61	61	61	61	61	61	61	61	61	61	61	61	61	61	61	61	61	61	61	61	60	60	60	60	60	60
				Exposed	61	61	61	61	61	61	61	61	61	61	61	61	61	61	61	61	61	61	61	61	61	61	61	61	61	61	61	61	61	61	61	61	61	61	61	61	60	60	60	60	60	60
		9:12	36.9	Non-Exposed	63	63	63	63	63	63	63	63	63	63	63	63	63	63	63	63	63	63	63	63	63	63	63	63	63	63	63	63	63	63	63	63	63	63	63	63	62	62	62	62	61	61
				Exposed	63	63	63	63	63	63	63	63	63	63	63	63	63	63	63	63	63	63	63	63	63	63	63	63	63	63	63	63	63	63	63	63	63	63	63	63	62	61	61	61	61	61
		10:12	39.8	Non-Exposed	67	67	67	67	67	67	67	67	67	67	67	67	67	67	67	67	67	67	67	67	67	67	67	67	67	67	67	67	67	67	67	67	67	67	67	67	66	66	66	66	66	66
				Exposed	67	67	67	67	67	67	67	67	67	67	67	67	67	67	67	67	67	67	67	67	67	67	67	67	67	67	67	67	67	67	67	67	67	67	67	67	66	66	66	66	66	66
		11:12	42.5	Non-Exposed	70	70	70	70	70	70	70	70	70	70	70	70	70	70	70	70	70	70	70	70	70	70	70	70	70	70	70	70	70	70	70	70	70	70	70	70	68	68	68	67	67	67
				Exposed	70	70	70	70	70	70	70	70	70	70	70	70	70	70	70	70	70	70	70	70	70	70	70	70	70	70	70	70	70	70	70	70	70	70	70	70	68	66	68	65	62	67
		12:12	45	Non-Exposed	74	74	74	74	74	74	74	74	74	74	74	74	74	74	74	74	74	74	73	73	73	72	72	72	71	71	71	69	69	68	68	68	63	67	67	59	65	63	55	64	60	52
				Exposed	74	74	74	74	74	74	74	74	74	74	74	74	74	74	74	74	74	74	73	73	73	72	71	72	70	66	71	65	62	69	61	58	68	58	55	67	54	52	65	52	49	0
	C	Flat	0	Non-Exposed	63	63	63	63	63	63	63	63	63	63	63	63	63	63	63	63	63	63	63	63	63	63	63	63	63	63	63	63	63	61	63	63	57	63	63	54	63	60	51	63	57	48
				Exposed	63	63	63	63	63	63	63	63	63	63	63	63	63	63	63	63	63	63	63	63	63	63	63	63	63	63	63	59	63	63	55	63	60	52	0	57	49	0	54	46	0	54
		1:12	4.8	Non-Exposed	58	58	58	58	58	58	58	58	58	58	58	58	58	58	58	58	58	58	58	58	58	58	58	58	58	58	58	58	58	58	58	57	58	58	54	58	58	51	58	57	48	0
				Exposed	58	58	58	58	58	58	58	58	58	58	58	58	58	58	58	58	58	58	58	58	58	58	58	58	58	58	58	58	58	58	55	58	58	52	0	57	49	0	54	46	0	54
		2:12	9.5	Non-Exposed	55	55	55	55	55	55	55	55	55	55	55	55	55	55	55	55	55	55	55	55	55	55	55	55	55	55	55	55	55	55	55	54	55	55	50	55	52	48	55	49	45	0
				Exposed	55	55	55	55	55	55	55	55	55	55	55	55	55	55	55	55	55	55	55	55	55	55	55	55	55	55	55	51	55	55	48	0	55	45	0	52	0	0	49	0	0	0
		3:12	14.0	Non-Exposed	53	53	53	53	53	53	53	53	53	53	53	53	53	53	53	53	53	53	53	53	53	53	53	53	53	53	53	53	53	53	53	53	53	53	50	53	52	47	53	49	45	0
				Exposed	53	53	53	53	53	53	53	53	53	53	53	53	53	53	53	53	53	53	53	53	53	53	53	53	53	53	53	51	53	53	48	0	53	45	0	52	0	0	49	0	0	0
		4:12	18.4	Non-Exposed	53	53	53	53	53	53	53	53	53	53	53	53	53	53	53	53	53	53	53	53	53	53	53	53	53	53	53	53	53	53	53	53	53	53	50	53	52	47	53	49	45	0
				Exposed	53	53	53	53	53	53	53	53	53	53	53	53	53	53	53	53	53	53	53	53	53	53	53	53	53	53	53	51	53	53	48	0	53	45	0	52	0	0	49	0	0	0
		5:12	22.6	Non-Exposed	54	54	54	54	54	54	54	54	54	54	54	54	54	54	54	54	54	54	54	54	54	54	54	54	54	54	54	54	54	54	54	54	54	54	54	54	54	54	50	54	54	47
				Exposed	54	54	54	54	54	54	54	54	54	54	54	54	54	54	54	54	54	54	54	54	54	54	54	54	54	54	54	54	54	54	52	54	54	49	54	54	46	0	54	0	0	0
		6:12	26.6	Non-Exposed	56	56	56	56	56	56	56	56	56	56	56	56	56	56	56	56	56	56	56	56	56	56	56	56	56	56	56	56	56	56	56	56	56	56	54	56	56	50	56	54	47	0
				Exposed	56	56	56	56	56	56	56	56	56	56	56	56	56	56	56	56	56	56	56	56	56	56	56	56	56	56	56	56	56	56	52	56	56	49	56	56	46	0	56	0	0	0
		7:12	30.3	Non-Exposed	58	58	58	58	58	58	58	58	58	58	58	58	58	58	58	58	58	58	58	58	58	58	58	58	58	58	58	58	58	58	58	58	57	57	57	56	56	56	55	55	53	0
				Exposed	58	58	58	58	58	58	58	58	58	58	58	58	58	58	58	58	58	58	58	58	58	58	58	58	58	58	58	58	58	58	58	58	57	55	57	55	52	56	52	49	0	0
		8:12	33.7	Non-Exposed	61	61	61	61	61	61	61	61	61	61	61	61	61	61	61	61	61	61	61	61	61	61	61	61	61	61	61	61	61	61	60	60	60	59	59	59	58	58	56	57	57	52
				Exposed	61	61	61	61	61	61	61	61	61	61	61	61	61	61	61	61	61	61	61	61	61	61	61	61	61	61	61	61	61	61	60	58	60	58	55	59	55	52	58	52	49	0
		9:12	36.9	Non-Exposed	63	63	63	63	63	63	63	63	63	63	63	63	63	63	63	63	63	63	63	63	63	63	63	63	63	63	63	63	63	63	62	62	62	60	60	59	59	59	56	58	58	52
				Exposed	63	63	63	63	63	63	63	63	63	63	63	63	63	63	63	63	63	63	63	63	63	63	63	63	63	63	63	62	63	61	58	62	58	55	60	55	52	59	52	49	0	0
		10:12	39.8	Non-Exposed	67	67	67	67	67	67	67	67	67	67	67	67	67	67	67	67	67	67	67	67	67	67	67	67	67	67	67	65	65	65	64	64	63	62	62	59	61	61	56	60	60	52
				Exposed	67	67	67	67	67	67	67	67	67	67	67	67	67	67	67	67	67	67	67	67	67	67	67	67	66	66	66	65	62	65	61	58	64	58	55	62	54	52	61	52	49	0
		11:12	42.5	Non-Exposed	70	70	70	70	70	70	70	70	70	70	70	70	70	70	70	70	70	70	70	70	70	70	70	70	68	68	68	67	67	67	66	66	63	64	64	59	63	63	55	62	60	52
				Exposed	70	70	70	70	70	70	70	70	70	70	70	70	70	70	70	70	70	70	70	70	70	70	70	70	68	66	68	65	62	67	61	58	66	58	55	64	54	52	63	52	49	0
		12:12	45	Non-Exposed	74	74	74	74	74	74	74	74	74	74	74	74	74	74	74	74	74	74	73	73	73	72	72	72	71	71	71	69	69	68	68	68	63	67	67	59	65	63	55	64	60	52
				Exposed	74	74	74	74	74	74	74	74	74	74	74	74	74	74	74	74	74	74	73	73	73	72	71	72	70	66	71	65	62	69	61	58	68	58	55	67	54	52	65	52	49	0
	D	Flat	0	Non-Exposed	63	63	63	63	63	63	63	63	63	63	63	63	63	63	63	63	63	63	63	63	63	63	63	63	63	63	60	63	63	56	63	62	52	63	58	49	63	55	46	63	52	0
				Exposed	63	63	63	63	63	63	63	63	63	63	63	63	63	63	63	63	63	63	63	63	63	63	62	63	63	58	63	63	54	63	59	50	0	55	47	0	52	45	0	49	0	0
		1:12	4.8	Non-Exposed	58	58	58	58	58	58	58	58	58	58	58	58	58	58	58	58	58	58	58	58	58	58	58	58	58	58	58	58	58	56	58	58	52	58	58	49	58	55	46	58	52	0
				Exposed	58	58	58	58	58	58	58	58	58	58	58	58	58	58	58	58	58	58	58	58	58	58	58	58	58	58	58	54	58	58	50	0	55	47	0	52	45	0	49	0	0
		2:12	9.5	Non-Exposed	55	55	55	55	55	55	55	55	55	55	55	55	55	55	55	55	55	55	55	55	55	55	55	55	55	55	55	55	53	55	54	49	55	51	46	55	48	0	55	45	0
				Exposed	55	55	55	55	55	55	55	55	55	55	55	55	55	55	55	55	55	55	55	55	55	55	54	55	55	50	55	55	47	0	54	0	0	51	0	0	48	0	0	45	0	0
		3:12	14.0	Non-Exposed	53	53	53	53	53	53	53	53	53	53	53	53	53	53	53	53	53	53	53	53	53	53	53	53	53	53	53	53	52	53	53	49	53	51	46	53	48	0	53	45	0
				Exposed	53	53	53	53	53	53	53	53	53	53	53	53	53	53	53	53	53	53	53	53	53	53	53	53	53	50	53	53	47	0	53	0	0	51	0	0	48	0	0	45	0	0
		4:12	18.4	Non-Exposed	53	53	53	53	53	53	53	53	53	53	53	53	53	53	53	53	53	53	53	53	53	53	53	53	53	53	53	53	52	53	53	49	53	51	46	53	48	0	53	45	0
				Exposed	53	53	53	53	53	53	53	53	53	53	53	53	53	53	53	53	53	53	53	53	53	53	53	53	53	50	53	53	47	0	53	0	0	51	0	0	48	0	0	45	0	0
		5:12	22.6	Non-Exposed	54	54	54	54	54	54	54	54	54	54	54	54	54	54	54	54	54	54	54	54	54	54	54	54	54	54	54	54	54	54	54	52	54	54	49	54	52	46	54	50	43
				Exposed	54	54	54	54	54	54	54	54	54	54	54	54	54	54	54	54	54	54	54	54	54	54	54	54	54	54	54	51	54	54	48	54	54	45	0	54	0	0	52	0	0
		6:12	26.6	Non-Exposed	56	56	56	56	56	56	56	56	56	56	56	56	56	56	56	56	56	56	56	56	56	56	56	56	56	56	56	56	56	56	56	52	56	55	49	56	52	46	56	49	43
				Exposed	56	56	56	56	56	56	56	56	56	56	56	56	56	56	56	56	56	56	56	56	56	56	56	56	56	55	56	56	51	56	56	48	0	56	45	0	55	0	0	52	0	0
		7:12	30.3	Non-Exposed	58	58	58	58	58	58	58	58	58	58	58	58	58	58	58	58	58	58	58	58	58	58	58	58	58	58	58	58	58	58	57	57	57	56	56	54	55	55	51	54	54	48
				Exposed	58	58	58	58	58	58	58	58	58	58	58	58	58	58	58	58	58	58	58	58	58	58	58	58	58	58	58	57	58	57	54	57	53	50	56	50	48	0	48	45	0
		8:12	33.7	Non-Exposed	61	61	61	61	61	61	61	61	61	61	61	61	61	61	61	61	61	61	61	61	61	61	61	61	60	60	60	59	59	59	58	58	58	57	57	54	56	56	51	55	55	48
				Exposed	61	61	61	61	61	61	61	61	61	61	61	61	61	61	61	61	61	61	61	61	61	61	61	61	60	60	60	59	57	59	56	54	58	53	50	57	50	48	0	47	45	0
		9:12	36.9	Non-Exposed	63	63	63	63	63	63	63	63	63	63	63	63	63	63	63	63	63	63	63	63	63	63	63	63	62	62	62	61	61	61	60	60	58	59	59	54	58	58	51	56	55	48
				Exposed	63	63	63	63	63	63	63	63	63	63	63	63	63	63	63	63	63	63	63	63	63	63	63	63	62	61	62	60	57	61	56	53	60	53	50	59	50	48	0	47	45	0
		10:12	39.8	Non-Exposed	67	67	67	67	67	67	67	67	67	67	67	67	67	67	67	67	67	67	66	66	66	66	66	66	65	65	65	63	63	62	62	62	58	61	61	54	59	58	51	58	55	48
				Exposed	67	67	67	67	67	67	67	67	67	67	67	67	67	67	67	67	67	67	66	66	66	66	66	66	64	61	65	60	57	63	56	53	62	53	50	61	50	47	0	47	45	0
		11:12	42.5	Non-Exposed	70	70	70	70	70	70	70	70	70	70	70	70	70	70	70	70	70	70	69	69	69	68	68	68	67	67	67	65	65	62	64	64	58	62	62	54	61	58	51	60	55	48
				Exposed	70	70	70	70	70	70	70	70	70	70	70	70	70	70	70	70	70	70	69	68	69	68	66	68	64	61	67	60	57	65	56	53	64	53	50	62	50	47	0	47	45	0
		12:12	45	Non-Exposed	74	74	74	74	74	74	74	74	74	74	74	74	73	73	73	72	72	72	72	72	72	71	71	71	69	69	66	68	68	62	66	65	57	64	61	54	63	58	51	61	55	48
				Exposed	74	74	74	74	74	74	74	74	74	74	74	74	73	73	73	72	71	72	72	68	72	69	66	71	64	61	69	60	57	68	56	53	66	53	50	64	50	47	0	47	45	0

Tamarack 2.3 Rail – Gable Flush-Mount on 30 Foot Maximum Mean Roof Height – Landscape – Panel Width = 40 Inches or Less

Ground Snow Load	Exposure Category	Roof Pitch	Roof Angle	Wind Speed (mph)	95			100			105			110			115			120			125			130			140			150			160			170			180			190		
				Roof Area	1	2	3	1	2	3	1	2	3	1	2	3	1	2	3	1	2	3	1	2	3	1	2	3	1	2	3	1	2	3	1	2	3	1	2	3	1	2	3	1	2	3
60	B	Flat	0	Non-Exposed	60	60	60	60	60	60	60	60	60	60	60	60	60	60	60	60	60	60	60	60	60	60	60	60	60	60	60	60	60	60	60	60	60	60	60	60	60	60	60	60	60	57
				Exposed	60	60	60	60	60	60	60	60	60	60	60	60	60	60	60	60	60	60	60	60	60	60	60	60	60	60	60	60	60	60	60	60	60	60	60	60	60	58	60	60	55	60
		1:12	4.8	Non-Exposed	56	56	56	56	56	56	56	56	56	56	56	56	56	56	56	56	56	56	56	56	56	56	56	56	56	56	56	56	56	56	56	56	56	56	56	56	56	56	56	56	56	56
				Exposed	56	56	56	56	56	56	56	56	56	56	56	56	56	56	56	56	56	56	56	56	56	56	56	56	56	56	56	56	56	56	56	56	56	56	56	56	56	55	56	56	55	56
		2:12	9.5	Non-Exposed	53	53	53	53	53	53	53	53	53	53	53	53	53	53	53	53	53	53	53	53	53	53	53	53	53	53	53	53	53	53	53	53	53	53	53	53	53	53	53	53	53	53
				Exposed	53	53	53	53	53	53	53	53	53	53	53	53	53	53	53	53	53	53	53	53	53	53	53	53	53	53	53	53	53	53	53	53	53	53	53	53	53	50	53	53	48	0
		3:12	14.0	Non-Exposed	51	51	51	51	51	51	51	51	51	51	51	51	51	51	51	51	51	51	51	51	51	51	51	51	51	51	51	51	51	51	51	51	51	51	51	51	51	51	51	51	51	51
				Exposed	51	51	51	51	51	51	51	51	51	51	51	51	51	51	51	51	51	51	51	51	51	51	51	51	51	51	51	51	51	51	51	51	51	51	51	51	51	50	51	51	48	0
		4:12	18.4	Non-Exposed	51	51	51	51	51	51	51	51	51	51	51	51	51	51	51	51	51	51	51	51	51	51	51	51	51	51	51	51	51	51	51	51	51	51	51	51	51	51	51	51	51	51
				Exposed	51	51	51	51	51	51	51	51	51	51	51	51	51	51	51	51	51	51	51	51	51	51	51	51	51	51	51	51	51	51	51	51	51	51	51	51	51	50	51	51	48	0
		5:12	22.6	Non-Exposed	52	52	52	52	52	52	52	52	52	52	52	52	52	52	52	52	52	52	52	52	52	52	52	52	52	52	52	52	52	52	52	52	52	52	52	52	52	52	52	52	52	52
				Exposed	52	52	52	52	52	52	52	52	52	52	52	52	52	52	52	52	52	52	52	52	52	52	52	52	52	52	52	52	52	52	52	52	52	52	52	52	52	52	52	52	52	52
		6:12	26.6	Non-Exposed	54	54	54	54	54	54	54	54	54	54	54	54	54	54	54	54	54	54	54	54	54	54	54	54	54	54	54	54	54	54	54	54	54	54	54	54	54	54	54	54	54	54
				Exposed	54	54	54	54	54	54	54	54	54	54	54	54	54	54	54	54	54	54	54	54	54	54	54	54	54	54	54	54	54	54	54	54	54	54	54	54	54	54	54	54	52	54
		7:12	30.3	Non-Exposed	56	56	56	56	56	56	56	56	56	56	56	56	56	56	56	56	56	56	56	56	56	56	56	56	56	56	56	56	56	56	56	56	56	56	56	56	56	56	56	56	56	56
				Exposed	56	56	56	56	56	56	56	56	56	56	56	56	56	56	56	56	56	56	56	56	56	56	56	56	56	56	56	56	56	56	56	56	56	56	56	56	56	56	56	56	56	56
		8:12	33.7	Non-Exposed	58	58	58	58	58	58	58	58	58	58	58	58	58	58	58	58	58	58	58	58	58	58	58	58	58	58	58	58	58	58	58	58	58	58	58	58	58	58	58	58	58	58
				Exposed	58	58	58	58	58	58	58	58	58	58	58	58	58	58	58	58	58	58	58	58	58	58	58	58	58	58	58	58	58	58	58	58	58	58	58	58	58	58	58	58	58	58
		9:12	36.9	Non-Exposed	61	61	61	61	61	61	61	61	61	61	61	61	61	61	61	61	61	61	61	61	61	61	61	61	61	61	61	61	61	61	61	61	61	61	61	61	60	60	60	60	60	60
				Exposed	61	61	61	61	61	61	61	61	61	61	61	61	61	61	61	61	61	61	61	61	61	61	61	61	61	61	61	61	61	61	61	61	61	61	61	61	60	58	60	58	58	60
		10:12	39.8	Non-Exposed	64	64	64	64	64	64	64	64	64	64	64	64	64	64	64	64	64	64	64	64	64	64	64	64	64	64	64	64	64	64	63	63	63	62	62	62	61	61	59	60	60	59
				Exposed	64	64	64	64	64	64	64	64	64	64	64	64	64	64	64	64	64	64	64	64	64	64	64	64	64	64	64	63	62	63	61	58	62	58	55	61	54	52	60	52	49	0
		11:12	42.5	Non-Exposed	67	67	67	67	67	67	67	67	67	67	67	67	67	67	67	67	67	67	67	67	67	67	67	67	67	67	67	65	65	65	64	64	63	63	63	59	62	62	55	60	60	52
				Exposed	67	67	67	67	67	67	67	67	67	67	67	67	67	67	67	67	67	67	67	67	67	67	67	67	67	66	67	65	62	65	61	58	64	58	55	63	54	52	62	52	49	0
		12:12	45	Non-Exposed	71	71	71	71	71	71	71	71	71	71	71	71	71	71	71	71	71	71	71	71	71	70	70	70	69	69	69	68	68	68	66	66	63	65	65	59	64	63	55	62	60	52
				Exposed	71	71	71	71	71	71	71	71	71	71	71	71	71	71	71	71	71	71	71	71	71	70	70	70	69	66	69	65	62	68	61	58	66	58	55	65	54	52	64	52	49	0
	C	Flat	0	Non-Exposed	60	60	60	60	60	60	60	60	60	60	60	60	60	60	60	60	60	60	60	60	60	60	60	60	60	60	60	60	60	60	60	60	57	60	60	54	60	60	51	60	57	48
				Exposed	60	60	60	60	60	60	60	60	60	60	60	60	60	60	60	60	60	60	60	60	60	60	60	60	60	60	60	60	59	60	60	55	60	60	52	0	57	49	0	54	46	0
		1:12	4.8	Non-Exposed	56	56	56	56	56	56	56	56	56	56	56	56	56	56	56	56	56	56	56	56	56	56	56	56	56	56	56	56	56	56	56	56	56	56	56	54	56	56	51	56	56	48
				Exposed	56	56	56	56	56	56	56	56	56	56	56	56	56	56	56	56	56	56	56	56	56	56	56	56	56	56	56	56	56	56	56	55	56	56	52	0	56	49	0	54	46	0
		2:12	9.5	Non-Exposed	53	53	53	53	53	53	53	53	53	53	53	53	53	53	53	53	53	53	53	53	53	53	53	53	53	53	53	53	53	53	53	53	53	53	53	50	53	52	48	53	49	45
				Exposed	53	53	53	53	53	53	53	53	53	53	53	53	53	53	53	53	53	53	53	53	53	53	53	53	53	53	53	53	51	53	53	48	0	53	45	0	52	0	0	49	0	0
		3:12	14.0	Non-Exposed	51	51	51	51	51	51	51	51	51	51	51	51	51	51	51	51	51	51	51	51	51	51	51	51	51	51	51	51	51	51	51	51	51	51	51	50	51	51	47	51	49	45
				Exposed	51	51	51	51	51	51	51	51	51	51	51	51	51	51	51	51	51	51	51	51	51	51	51	51	51	51	51	51	51	51	51	48	0	51	45	0	51	0	0	49	0	0
		4:12	18.4	Non-Exposed	51	51	51	51	51	51	51	51	51	51	51	51	51	51	51	51	51	51	51	51	51	51	51	51	51	51	51	51	51	51	51	51	51	51	51	50	51	51	47	51	49	45
				Exposed	51	51	51	51	51	51	51	51	51	51	51	51	51	51	51	51	51	51	51	51	51	51	51	51	51	51	51	51	51	51	51	48	0	51	45	0	51	0	0	49	0	0
		5:12	22.6	Non-Exposed	52	52	52	52	52	52	52	52	52	52	52	52	52	52	52	52	52	52	52	52	52	52	52	52	52	52	52	52	52	52	52	52	52	52	52	52	52	52	50	52	52	47
				Exposed	52	52	52	52	52	52	52	52	52	52	52	52	52	52	52	52	52	52	52	52	52	52	52	52	52	52	52	52	52	52	52	52	52	52	49	52	52	46	0	52	0	0
		6:12	26.6	Non-Exposed	54	54	54	54	54	54	54	54	54	54	54	54	54	54	54	54	54	54	54	54	54	54	54	54	54	54	54	54	54	54	54	54	54	54	54	54	54	54	50	54	54	47
				Exposed	54	54	54	54	54	54	54	54	54	54	54	54	54	54	54	54	54	54	54	54	54	54	54	54	54	54	54	54	54	54	54	52	54	54	49	54	54	46	0	54	0	0
		7:12	30.3	Non-Exposed	56	56	56	56	56	56	56	56	56	56	56	56	56	56	56	56	56	56	56	56	56	56	56	56	56	56	56	56	56	56	56	56	56	55	55	55	54	54	54	54	54	53
				Exposed	56	56	56	56	56	56	56	56	56	56	56	56	56	56	56	56	56	56	56	56	56	56	56	56	56	56	56	56	56	56	56	56	56	55	55	55	54	52	54	52	49	0
		8:12	33.7	Non-Exposed	58	58	58	58	58	58	58	58	58	58	58	58	58	58	58	58	58	58	58	58	58	58	58	58	58	58	58	58	58	58	58	58	58	57	57	57	56	56	56	55	55	52
				Exposed	58	58	58	58	58	58	58	58	58	58	58	58	58	58	58	58	58	58	58	58	58	58	58	58	58	58	58	58	58	58	58	58	58	57	55	57	55	52	56	52	49	0
		9:12	36.9	Non-Exposed	61	61	61	61	61	61	61	61	61	61	61	61	61	61	61	61	61	61	61	61	61	61	61	61	61	61	61	61	61	61	60	60	60	59	59	59	58	58	56	57	57	52
				Exposed	61	61	61	61	61	61	61	61	61	61	61	61	61	61	61	61	61	61	61	61	61	61	61	61	61	61	61	61	61	61	60	58	60	58	55	59	55	52	58	52	49	0
		10:12	39.8	Non-Exposed	64	64	64	64	64	64	64	64	64	64	64	64	64	64	64	64	64	64	64	64	64	64	64	64	64	64	64	63	63	63	62	62	62	61	61	59	60	60	56	59	59	52
				Exposed	64	64	64	64	64	64	64	64	64	64	64	64	64	64	64	64	64	64	64	64	64	64	64	64	64	63	62	63	61	58	62	58	55	61	54	52	60	52	49	0		
		11:12	42.5	Non-Exposed	67	67	67	67	67	67	67	67	67	67	67	67	67	67	67	67	67	67	67	67	67	67	67	67	67	65	65	65	64	64	63	63	63	59	62	62	55	60	60	52		
				Exposed	67	67	67	67	67	67	67	67	67	67	67	67	67	67	67	67	67	67	67	67	67	67	67	67	66	67	65	62	65	61	58	64	58	55	63	54	52	62	52	49	0	
		12:12	45	Non-Exposed	71	71	71	71	71	71	71	71	71	71	71	71	71	71	71	71	71	71	71	71	71	70	70	70	69	69	69	68	68	68	66	66	63	65	65	59	64	63	55	62	60	52
				Exposed	71	71	71	71	71	71	71	71	71	71	71	71	71	71	71	71	71	71	71	71	71	70	70	70	69	66	69	65	62	68	61	58	66	58	55	65	54	52	64	52	49	0
	D	Flat	0	Non-Exposed	60	60	60	60	60	60	60	60	60	60	60	60	60	60	60	60	60	60	60	60	60	60	60	60	60	60	60	60	60	56	60	60	52	60	58	49	60	55	46	60	52	0
				Exposed	60	60	60	60	60	60	60	60	60	60	60	60	60	60	60	60	60	60	60	60	60	60	60	60	60	58	60	60	54	60	59	50	0	55	47	0	52	45	0	49	0	0
		1:12	4.8	Non-Exposed	56	56	56	56	56	56	56	56	56	56	56	56	56	56	56	56	56	56	56	56	56	56	56	56	56	56	56	56	56	56	56	56	52	56	56	49	56	55	46	56	52	0
				Exposed	56	56	56	56	56	56	56	56	56	56	56	56	56	56	56	56	56	56	56	56	56	56	56	56	56	56	56	56	54	56	56	50	0	55	47	0	52	45	0	49	0	0
		2:12	9.5	Non-Exposed	53	53	53	53	53	53	53	53	53	53	53	53	53	53	53	53	53	53	53	53	53	53	53	53	53	53	53	53	53	53	53	53	49	53	51	46	53	48	0	53	45	0
				Exposed	53	53	53	53	53	53	53	53	53	53	53	53	53	53	53	53	53	53	53	53	53	53	53	53	53	50	53	53	47	0	53	0	0	51	0	0	48	0	0	45	0	0
		3:12	14.0	Non-Exposed	51	51	51	51	51	51	51	51	51	51	51	51	51	51	51	51	51	51	51	51	51	51	51	51	51	51	51	51	51	51	51	51	49	51	51	46	51	48	0	51	45	0
				Exposed	51	51	51	51	51	51	51	51	51	51	51	51	51	51	51	51	51	51	51	51	51	51	51	51	51	50	51	51	47	0	51	0	0	51	0	0	48	0	0	45	0	0
		4:12	18.4	Non-Exposed	51	51	51	51	51	51	51	51	51	51	51	51	51	51	51	51	51	51	51	51	51	51	51	51	51	51	51	51	51	51	51	51	49	51	51	46	51	48	0	51	45	0
				Exposed	51	51	51	51	51	51	51	51	51	51	51	51	51	51	51	51	51	51	51	51	51	51	51	51	51	50	51	51	47	0	51	0	0	51	0	0	48	0	0	45	0	0
		5:12	22.6	Non-Exposed	52	52	52	52	52	52	52	52	52	52	52	52	52	52	52	52	52	52	52	52	52	52	52	52	52	52	52	52	52	52	52	52	52	52	52	49	52	52	46	52	50	43
				Exposed	52	52	52	52	52	52	52	52	52	52	52	52	52	52	52	52	52	52	52	52	52	52	52	52	52	52	52	52	51	52	52	48	52	52	45	0	52	0	0	52	0	0
		6:12	26.6	Non-Exposed	54	54	54	54	54	54	54	54	54	54	54	54	54	54	54	54	54	54	54	54	54	54	54	54	54	54	54	54	54	54	54	54	52	54	54	49	54	52	46	54	49	43
				Exposed	54	54	54	54	54	54	54	54	54	54	54	54	54	54	54	54	54	54	54	54	54	54	54	54	54	54	54	54	51	54	54	48	0	54	45	0	54	0	0	52	0	0
		7:12	30.3	Non-Exposed	56	56	56	56	56	56	56	56	56	56	56	56	56	56	56	56	56	56	56	56	56	56	56	56	56	56	56	56	56	56	55	55	55	54	54	54	53	53	51	52	52	48
				Exposed	56	56	56	56	56	56	56	56	56	56	56	56	56	56	56	56	56	56	56	56	56	56	56	56	56	56	56	56	56	56	55	54	55	53	50	54	50	48	0	48	45	0
		8:12	33.7	Non-Exposed	58	58	58	58	58	58	58	58	58	58	58	58	58	58	58	58	58	58	58	58	58	58	58	58	58	58	58	58	58	58	57	57	57	56	56	54	55	55	51	54	54	48
				Exposed	58	58	58	58	58	58	58	58	58	58	58	58	58	58	58	58	58	58	58	58	58	58	58	58	58	58	58	58	57	58	56	54	57	53	50	56	50	48	0	47	45	0
		9:12	36.9	Non-Exposed	61	61	61	61	61	61	61	61	61	61	61	61	61	61	61	61	61	61	61	61	61	61	61	61	61	61	61	60	60	60	58	58	58	57	57	54	56	56	51	55	55	48
				Exposed	61	61	61	61	61	61	61	61	61	61	61	61	61	61	61	61	61	61	61	61	61	61	61	61	61	61	61	60	57	60	56	53	58	53	50	57	50	48	0	47	45	0
		10:12	39.8	Non-Exposed	64	64	64	64	64	64	64	64	64	64	64	64	64	64	64	64	64	64	64	64	64	64	64	64	63	63	63	62	62	62	60	60	58	59	59	54	58	58	51	57	55	48
				Exposed	64	64	64	64	64	64	64	64	64	64	64	64	64	64	64	64	64	64	64	64	64	64	64	64	63	61	63	60	57	62	56	53	60	53	50	59	50	47	0	47	45	0
		11:12	42.5	Non-Exposed	67	67	67	67	67	67	67	67	67	67	67	67	67	67	67	67	67	67	67	67	67	66	66	66	65	65	65	64	64	62	62	62	58	61	61	54	60	58	51	58	55	48
				Exposed	67	67	67	67	67	67	67	67	67	67	67	67	67	67	67	67	67	67	67	67	67	66	66	66	64	61	65	60	57	64	56	53	62	53	50	61	50	47	0	47	45	0
		12:12	45	Non-Exposed	71	71	71	71	71	71	71	71	71	71	71	71	71	71	71	70	70	70	70	70	70	69	69	69	67	67	66	66	66	62	64	64	57	63	61	54	62	58	51	60	55	48
				Exposed	71	71	71	71	71	71	71	71	71	71	71	71	71	71	71	70	70	70	70	68	70	69	66	69	64	61	67	60	57	66	56	53	64	53	50	63	50	47	0	47	45	0

Tamarack 2.3 Rail – Gable Flush-Mount on 30 Foot Maximum Mean Roof Height – Landscape – Panel Width = 40 Inches or Less

Ground Snow Load	Exposure Category	Roof Pitch	Roof Angle	Wind Speed (mph)	95			100			105			110			115			120			125			130			140			150			160			170			180			190		
				Roof Area	1	2	3	1	2	3	1	2	3	1	2	3	1	2	3	1	2	3	1	2	3	1	2	3	1	2	3	1	2	3	1	2	3	1	2	3	1	2	3	1	2	3
70	B	Flat	0	Non-Exposed	56	56	56	56	56	56	56	56	56	56	56	56	56	56	56	56	56	56	56	56	56	56	56	56	56	56	56	56	56	56	56	56	56	56	56	56	56	56	56	56	56	56
				Exposed	56	56	56	56	56	56	56	56	56	56	56	56	56	56	56	56	56	56	56	56	56	56	56	56	56	56	56	56	56	56	56	56	56	56	56	56	56	56	56	56	55	56
		1:12	4.8	Non-Exposed	52	52	52	52	52	52	52	52	52	52	52	52	52	52	52	52	52	52	52	52	52	52	52	52	52	52	52	52	52	52	52	52	52	52	52	52	52	52	52	52	52	52
				Exposed	52	52	52	52	52	52	52	52	52	52	52	52	52	52	52	52	52	52	52	52	52	52	52	52	52	52	52	52	52	52	52	52	52	52	52	52	52	52	52	52	52	52
		2:12	9.5	Non-Exposed	49	49	49	49	49	49	49	49	49	49	49	49	49	49	49	49	49	49	49	49	49	49	49	49	49	49	49	49	49	49	49	49	49	49	49	49	49	49	49	49	49	49
				Exposed	49	49	49	49	49	49	49	49	49	49	49	49	49	49	49	49	49	49	49	49	49	49	49	49	49	49	49	49	49	49	49	49	49	49	49	49	49	49	49	49	48	0
		3:12	14.0	Non-Exposed	47	47	47	47	47	47	47	47	47	47	47	47	47	47	47	47	47	47	47	47	47	47	47	47	47	47	47	47	47	47	47	47	47	47	47	47	47	47	47	47	47	47
				Exposed	47	47	47	47	47	47	47	47	47	47	47	47	47	47	47	47	47	47	47	47	47	47	47	47	47	47	47	47	47	47	47	47	47	47	47	47	47	47	47	47	47	0
		4:12	18.4	Non-Exposed	47	47	47	47	47	47	47	47	47	47	47	47	47	47	47	47	47	47	47	47	47	47	47	47	47	47	47	47	47	47	47	47	47	47	47	47	47	47	47	47	47	47
				Exposed	47	47	47	47	47	47	47	47	47	47	47	47	47	47	47	47	47	47	47	47	47	47	47	47	47	47	47	47	47	47	47	47	47	47	47	47	47	47	47	47	47	0
		5:12	22.6	Non-Exposed	48	48	48	48	48	48	48	48	48	48	48	48	48	48	48	48	48	48	48	48	48	48	48	48	48	48	48	48	48	48	48	48	48	48	48	48	48	48	48	48	48	48
				Exposed	48	48	48	48	48	48	48	48	48	48	48	48	48	48	48	48	48	48	48	48	48	48	48	48	48	48	48	48	48	48	48	48	48	48	48	48	48	48	48	48	48	48
		6:12	26.6	Non-Exposed	50	50	50	50	50	50	50	50	50	50	50	50	50	50	50	50	50	50	50	50	50	50	50	50	50	50	50	50	50	50	50	50	50	50	50	50	50	50	50	50	50	50
				Exposed	50	50	50	50	50	50	50	50	50	50	50	50	50	50	50	50	50	50	50	50	50	50	50	50	50	50	50	50	50	50	50	50	50	50	50	50	50	50	50	50	50	50
		7:12	30.3	Non-Exposed	52	52	52	52	52	52	52	52	52	52	52	52	52	52	52	52	52	52	52	52	52	52	52	52	52	52	52	52	52	52	52	52	52	52	52	52	52	52	52	51	51	51
				Exposed	52	52	52	52	52	52	52	52	52	52	52	52	52	52	52	52	52	52	52	52	52	52	52	52	52	52	52	52	52	52	52	52	52	52	52	52	52	52	52	51	49	0
		8:12	33.7	Non-Exposed	54	54	54	54	54	54	54	54	54	54	54	54	54	54	54	54	54	54	54	54	54	54	54	54	54	54	54	54	54	54	54	54	54	54	54	54	53	53	53	52	52	52
				Exposed	54	54	54	54	54	54	54	54	54	54	54	54	54	54	54	54	54	54	54	54	54	54	54	54	54	54	54	54	54	54	54	54	54	54	54	54	53	52	53	52	49	0
		9:12	36.9	Non-Exposed	57	57	57	57	57	57	57	57	57	57	57	57	57	57	57	57	57	57	57	57	57	57	57	57	57	57	57	57	57	57	57	57	56	56	56	55	55	55	54	54	52
				Exposed	57	57	57	57	57	57	57	57	57	57	57	57	57	57	57	57	57	57	57	57	57	57	57	57	57	57	57	57	57	57	57	57	56	55	56	55	52	55	52	49	0
		10:12	39.8	Non-Exposed	60	60	60	60	60	60	60	60	60	60	60	60	60	60	60	60	60	60	60	60	60	60	60	60	60	60	60	60	60	60	59	59	59	58	58	58	57	57	56	56	56	52
				Exposed	60	60	60	60	60	60	60	60	60	60	60	60	60	60	60	60	60	60	60	60	60	60	60	60	60	60	60	60	60	60	59	58	59	58	55	58	54	52	57	52	49	0
		11:12	42.5	Non-Exposed	63	63	63	63	63	63	63	63	63	63	63	63	63	63	63	63	63	63	63	63	63	63	63	63	63	63	63	62	62	62	61	61	61	60	60	59	59	59	55	58	58	52
				Exposed	63	63	63	63	63	63	63	63	63	63	63	63	63	63	63	63	63	63	63	63	63	63	63	63	63	63	63	62	62	62	61	58	61	58	55	60	54	52	59	52	49	0
		12:12	45	Non-Exposed	66	66	66	66	66	66	66	66	66	66	66	66	66	66	66	66	66	66	66	66	66	66	66	66	66	66	66	65	65	65	63	63	63	62	62	59	61	61	55	60	60	52
				Exposed	66	66	66	66	66	66	66	66	66	66	66	66	66	66	66	66	66	66	66	66	66	66	66	66	66	66	66	65	62	65	61	58	63	58	55	62	54	52	61	52	49	0
	C	Flat	0	Non-Exposed	56	56	56	56	56	56	56	56	56	56	56	56	56	56	56	56	56	56	56	56	56	56	56	56	56	56	56	56	56	56	56	56	56	56	56	54	56	56	51	56	56	48
				Exposed	56	56	56	56	56	56	56	56	56	56	56	56	56	56	56	56	56	56	56	56	56	56	56	56	56	56	56	56	56	56	56	55	56	56	52	0	56	49	0	54	46	0
		1:12	4.8	Non-Exposed	52	52	52	52	52	52	52	52	52	52	52	52	52	52	52	52	52	52	52	52	52	52	52	52	52	52	52	52	52	52	52	52	52	52	52	52	52	52	51	52	52	48
				Exposed	52	52	52	52	52	52	52	52	52	52	52	52	52	52	52	52	52	52	52	52	52	52	52	52	52	52	52	52	52	52	52	52	52	52	52	0	52	49	0	52	46	0
		2:12	9.5	Non-Exposed	49	49	49	49	49	49	49	49	49	49	49	49	49	49	49	49	49	49	49	49	49	49	49	49	49	49	49	49	49	49	49	49	49	49	49	49	49	49	48	49	49	45
				Exposed	49	49	49	49	49	49	49	49	49	49	49	49	49	49	49	49	49	49	49	49	49	49	49	49	49	49	49	49	49	49	49	48	0	49	45	0	49	0	0	49	0	0
		3:12	14.0	Non-Exposed	47	47	47	47	47	47	47	47	47	47	47	47	47	47	47	47	47	47	47	47	47	47	47	47	47	47	47	47	47	47	47	47	47	47	47	47	47	47	47	47	47	45
				Exposed	47	47	47	47	47	47	47	47	47	47	47	47	47	47	47	47	47	47	47	47	47	47	47	47	47	47	47	47	47	47	47	47	0	47	45	0	47	0	0	47	0	0
		4:12	18.4	Non-Exposed	47	47	47	47	47	47	47	47	47	47	47	47	47	47	47	47	47	47	47	47	47	47	47	47	47	47	47	47	47	47	47	47	47	47	47	47	47	47	47	47	47	45
				Exposed	47	47	47	47	47	47	47	47	47	47	47	47	47	47	47	47	47	47	47	47	47	47	47	47	47	47	47	47	47	47	47	47	0	47	45	0	47	0	0	47	0	0
		5:12	22.6	Non-Exposed	48	48	48	48	48	48	48	48	48	48	48	48	48	48	48	48	48	48	48	48	48	48	48	48	48	48	48	48	48	48	48	48	48	48	48	48	48	48	48	48	48	47
				Exposed	48	48	48	48	48	48	48	48	48	48	48	48	48	48	48	48	48	48	48	48	48	48	48	48	48	48	48	48	48	48	48	48	48	48	48	48	48	46	0	48	0	0
		6:12	26.6	Non-Exposed	50	50	50	50	50	50	50	50	50	50	50	50	50	50	50	50	50	50	50	50	50	50	50	50	50	50	50	50	50	50	50	50	50	50	50	50	50	50	50	50	50	47
				Exposed	50	50	50	50	50	50	50	50	50	50	50	50	50	50	50	50	50	50	50	50	50	50	50	50	50	50	50	50	50	50	50	50	50	50	49	50	50	46	0	50	0	0
		7:12	30.3	Non-Exposed	52	52	52	52	52	52	52	52	52	52	52	52	52	52	52	52	52	52	52	52	52	52	52	52	52	52	52	52	52	52	52	52	52	52	52	52	52	52	52	51	51	51
				Exposed	52	52	52	52	52	52	52	52	52	52	52	52	52	52	52	52	52	52	52	52	52	52	52	52	52	52	52	52	52	52	52	52	52	52	52	52	52	52	52	51	49	0
		8:12	33.7	Non-Exposed	54	54	54	54	54	54	54	54	54	54	54	54	54	54	54	54	54	54	54	54	54	54	54	54	54	54	54	54	54	54	54	54	54	54	54	54	53	53	53	52	52	52
				Exposed	54	54	54	54	54	54	54	54	54	54	54	54	54	54	54	54	54	54	54	54	54	54	54	54	54	54	54	54	54	54	54	54	54	54	54	54	53	52	53	52	49	0
		9:12	36.9	Non-Exposed	57	57	57	57	57	57	57	57	57	57	57	57	57	57	57	57	57	57	57	57	57	57	57	57	57	57	57	57	57	57	57	57	56	56	56	55	55	55	54	54	52
				Exposed	57	57	57	57	57	57	57	57	57	57	57	57	57	57	57	57	57	57	57	57	57	57	57	57	57	57	57	57	57	57	57	57	56	55	56	55	52	55	52	49	0
		10:12	39.8	Non-Exposed	60	60	60	60	60	60	60	60	60	60	60	60	60	60	60	60	60	60	60	60	60	60	60	60	60	60	60	60	60	60	59	59	59	58	58	58	57	57	56	56	56	52
				Exposed	60	60	60	60	60	60	60	60	60	60	60	60	60	60	60	60	60	60	60	60	60	60	60	60	60	60	60	60	60	60	59	58	59	58	55	58	54	52	57	52	49	0
		11:12	42.5	Non-Exposed	63	63	63	63	63	63	63	63	63	63	63	63	63	63	63	63	63	63	63	63	63	63	63	63	63	63	63	62	62	62	61	61	61	60	60	59	59	59	55	58	58	52
				Exposed	63	63	63	63	63	63	63	63	63	63	63	63	63	63	63	63	63	63	63	63	63	63	63	63	63	63	63	62	62	62	61	58	61	58	55	60	54	52	59	52	49	0
		12:12	45	Non-Exposed	66	66	66	66	66	66	66	66	66	66	66	66	66	66	66	66	66	66	66	66	66	66	66	66	66	66	66	65	65	65	63	63	63	62	62	59	61	61	55	60	60	52
				Exposed	66	66	66	66	66	66	66	66	66	66	66	66	66	66	66	66	66	66	66	66	66	66	66	66	66	66	66	65	62	65	61	58	63	58	55	62	54	52	61	52	49	0
	D	Flat	0	Non-Exposed	56	56	56	56	56	56	56	56	56	56	56	56	56	56	56	56	56	56	56	56	56	56	56	56	56	56	56	56	56	56	56	56	52	56	56	49	56	55	46	56	52	0
				Exposed	56	56	56	56	56	56	56	56	56	56	56	56	56	56	56	56	56	56	56	56	56	56	56	56	56	56	56	54	56	56	50	0	55	47	0	52	45	0	49	0	0
		1:12	4.8	Non-Exposed	52	52	52	52	52	52	52	52	52	52	52	52	52	52	52	52	52	52	52	52	52	52	52	52	52	52	52	52	52	52	52	52	52	52	52	49	52	52	46	52	52	0
				Exposed	52	52	52	52	52	52	52	52	52	52	52	52	52	52	52	52	52	52	52	52	52	52	52	52	52	52	52	52	52	52	52	50	0	52	47	0	52	45	0	49	0	0
		2:12	9.5	Non-Exposed	49	49	49	49	49	49	49	49	49	49	49	49	49	49	49	49	49	49	49	49	49	49	49	49	49	49	49	49	49	49	49	49	49	49	49	46	49	48	0	49	45	0
				Exposed	49	49	49	49	49	49	49	49	49	49	49	49	49	49	49	49	49	49	49	49	49	49	49	49	49	49	49	47	0	49	0	0	49	0	0	48	0	0	45	0	0
		3:12	14.0	Non-Exposed	47	47	47	47	47	47	47	47	47	47	47	47	47	47	47	47	47	47	47	47	47	47	47	47	47	47	47	47	47	47	47	47	47	47	47	46	47	47	0	47	45	0
				Exposed	47	47	47	47	47	47	47	47	47	47	47	47	47	47	47	47	47	47	47	47	47	47	47	47	47	47	47	47	0	47	0	0	47	0	0	47	0	0	45	0	0
		4:12	18.4	Non-Exposed	47	47	47	47	47	47	47	47	47	47	47	47	47	47	47	47	47	47	47	47	47	47	47	47	47	47	47	47	47	47	47	47	47	47	47	46	47	47	0	47	45	0
				Exposed	47	47	47	47	47	47	47	47	47	47	47	47	47	47	47	47	47	47	47	47	47	47	47	47	47	47	47	47	0	47	0	0	47	0	0	47	0	0	45	0	0
		5:12	22.6	Non-Exposed	48	48	48	48	48	48	48	48	48	48	48	48	48	48	48	48	48	48	48	48	48	48	48	48	48	48	48	48	48	48	48	48	48	48	48	48	48	48	46	48	48	43
				Exposed	48	48	48	48	48	48	48	48	48	48	48	48	48	48	48	48	48	48	48	48	48	48	48	48	48	48	48	48	48	48	48	48	48	48	45	0	48	0	0	48	0	0
		6:12	26.6	Non-Exposed	50	50	50	50	50	50	50	50	50	50	50	50	50	50	50	50	50	50	50	50	50	50	50	50	50	50	50	50	50	50	50	50	50	50	50	49	50	50	46	50	49	43
				Exposed	50	50	50	50	50	50	50	50	50	50	50	50	50	50	50	50	50	50	50	50	50	50	50	50	50	50	50	50	50	50	50	48	0	50	45	0	50	0	0	50	0	0
		7:12	30.3	Non-Exposed	52	52	52	52	52	52	52	52	52	52	52	52	52	52	52	52	52	52	52	52	52	52	52	52	52	52	52	52	52	52	52	52	51	51	51	50	50	50	50	50	50	48
				Exposed	52	52	52	52	52	52	52	52	52	52	52	52	52	52	52	52	52	52	52	52	52	52	52	52	52	52	52	52	52	52	52	52	51	50	51	50	48	0	48	45	0
		8:12	33.7	Non-Exposed	54	54	54	54	54	54	54	54	54	54	54	54	54	54	54	54	54	54	54	54	54	54	54	54	54	54	54	54	54	54	54	54	53	53	53	52	52	51	51	51	48
				Exposed	54	54	54	54	54	54	54	54	54	54	54	54	54	54	54	54	54	54	54	54	54	54	54	54	54	54	54	54	54	54	54	54	53	50	53	50	48	0	47	45	0
		9:12	36.9	Non-Exposed	57	57	57	57	57	57	57	57	57	57	57	57	57	57	57	57	57	57	57	57	57	57	57	57	57	57	57	57	57	57	56	56	56	55	55	54	54	54	51	53	53	48
				Exposed	57	57	57	57	57	57	57	57	57	57	57	57	57	57	57	57	57	57	57	57	57	57	57	57	57	57	57	57	57	57	56	53	56	53	50	55	50	48	0	47	45	0
		10:12	39.8	Non-Exposed	60	60	60	60	60	60	60	60	60	60	60	60	60	60	60	60	60	60	60	60	60	60	60	60	60	60	60	60	60	60	59	59	59	58	58	54	55	55	51	54	54	48
				Exposed	60	60	60	60	60	60	60	60	60	60	60	60	60	60	60	60	60	60	60	60	60	60	60	60	60	60	60	60	59	57	59	56	53	58	53	50	56	50	47	0	47	45	0
		11:12	42.5	Non-Exposed	63	63	63	63	63	63	63	63	63	63	63	63	63	63	63	63	63	63	63	63	63	63	63	63	62	62	62	61	61	61	60	60	58	58	58	54	57	57	51	56	55	48
				Exposed	63	63	63	63	63	63	63	63	63	63	63	63	63	63	63	63	63	63	63	63	63	63	63	63	62	61	62	60	57	61	56	53	60	53	50	58	50	47	0	47	45	0
		12:12	45	Non-Exposed	66	66	66	66	66	66	66	66	66	66	66	66	66	66	66	66	66	66	66	66	66	66	66	66	64	64	64	63	63	62	62	62	57	60	60	54	59	58	51	58	55	48
				Exposed	66	66	66	66	66	66	66	66	66	66	66	66	66	66	66	66	66	66	66	66	66	66	66	66	64	61	64	60	57	63	56	53	62	53	50	60	50	47	0	47	45	0

Tamarack 2.3 Rail – Gable Flush-Mount on 30 Foot Maximum Mean Roof Height – Landscape – Panel Width = 40 Inches or Less

Ground Snow Load	Exposure Category	Roof Pitch	Roof Angle	Wind Speed (mph)	95			100			105			110			115			120			125			130			140			150			160			170			180			190		
				Roof Area	1	2	3	1	2	3	1	2	3	1	2	3	1	2	3	1	2	3	1	2	3	1	2	3	1	2	3	1	2	3	1	2	3	1	2	3	1	2	3	1	2	3
80	B	Flat	0	Non-Exposed	52	52	52	52	52	52	52	52	52	52	52	52	52	52	52	52	52	52	52	52	52	52	52	52	52	52	52	52	52	52	52	52	52	52	52	52	52	52	52	52	52	52
				Exposed	52	52	52	52	52	52	52	52	52	52	52	52	52	52	52	52	52	52	52	52	52	52	52	52	52	52	52	52	52	52	52	52	52	52	52	52	52	52	52	52	52	52
		1:12	4.8	Non-Exposed	49	49	49	49	49	49	49	49	49	49	49	49	49	49	49	49	49	49	49	49	49	49	49	49	49	49	49	49	49	49	49	49	49	49	49	49	49	49	49	49	49	49
				Exposed	49	49	49	49	49	49	49	49	49	49	49	49	49	49	49	49	49	49	49	49	49	49	49	49	49	49	49	49	49	49	49	49	49	49	49	49	49	49	49	49	49	49
		2:12	9.5	Non-Exposed	46	46	46	46	46	46	46	46	46	46	46	46	46	46	46	46	46	46	46	46	46	46	46	46	46	46	46	46	46	46	46	46	46	46	46	46	46	46	46	46	46	46
				Exposed	46	46	46	46	46	46	46	46	46	46	46	46	46	46	46	46	46	46	46	46	46	46	46	46	46	46	46	46	46	46	46	46	46	46	46	46	46	46	46	46	46	0
		3:12	14.0	Non-Exposed	44	44	44	44	44	44	44	44	44	44	44	44	44	44	44	44	44	44	44	44	44	44	44	44	44	44	44	44	44	44	44	44	44	44	44	44	44	44	44	44	44	44
				Exposed	44	44	44	44	44	44	44	44	44	44	44	44	44	44	44	44	44	44	44	44	44	44	44	44	44	44	44	44	44	44	44	44	44	44	44	44	44	44	44	44	44	0
		4:12	18.4	Non-Exposed	44	44	44	44	44	44	44	44	44	44	44	44	44	44	44	44	44	44	44	44	44	44	44	44	44	44	44	44	44	44	44	44	44	44	44	44	44	44	44	44	44	44
				Exposed	44	44	44	44	44	44	44	44	44	44	44	44	44	44	44	44	44	44	44	44	44	44	44	44	44	44	44	44	44	44	44	44	44	44	44	44	44	44	44	44	44	0
		5:12	22.6	Non-Exposed	45	45	45	45	45	45	45	45	45	45	45	45	45	45	45	45	45	45	45	45	45	45	45	45	45	45	45	45	45	45	45	45	45	45	45	45	45	45	45	45	45	45
				Exposed	45	45	45	45	45	45	45	45	45	45	45	45	45	45	45	45	45	45	45	45	45	45	45	45	45	45	45	45	45	45	45	45	45	45	45	45	45	45	45	45	45	45
		6:12	26.6	Non-Exposed	47	47	47	47	47	47	47	47	47	47	47	47	47	47	47	47	47	47	47	47	47	47	47	47	47	47	47	47	47	47	47	47	47	47	47	47	47	47	47	47	47	47
				Exposed	47	47	47	47	47	47	47	47	47	47	47	47	47	47	47	47	47	47	47	47	47	47	47	47	47	47	47	47	47	47	47	47	47	47	47	47	47	47	47	47	47	47
		7:12	30.3	Non-Exposed	49	49	49	49	49	49	49	49	49	49	49	49	49	49	49	49	49	49	49	49	49	49	49	49	49	49	49	49	49	49	49	49	49	49	49	49	49	49	49	49	49	49
				Exposed	49	49	49	49	49	49	49	49	49	49	49	49	49	49	49	49	49	49	49	49	49	49	49	49	49	49	49	49	49	49	49	49	49	49	49	49	49	49	49	49	49	49
		8:12	33.7	Non-Exposed	51	51	51	51	51	51	51	51	51	51	51	51	51	51	51	51	51	51	51	51	51	51	51	51	51	51	51	51	51	51	51	51	51	51	51	51	51	51	51	51	51	51
				Exposed	51	51	51	51	51	51	51	51	51	51	51	51	51	51	51	51	51	51	51	51	51	51	51	51	51	51	51	51	51	51	51	51	51	51	51	51	51	51	51	51	51	51
		9:12	36.9	Non-Exposed	53	53	53	53	53	53	53	53	53	53	53	53	53	53	53	53	53	53	53	53	53	53	53	53	53	53	53	53	53	53	53	53	53	53	53	53	53	53	53	53	53	53
				Exposed	53	53	53	53	53	53	53	53	53	53	53	53	53	53	53	53	53	53	53	53	53	53	53	53	53	53	53	53	53	53	53	53	53	53	53	53	53	53	53	53	53	53
		10:12	39.8	Non-Exposed	56	56	56	56	56	56	56	56	56	56	56	56	56	56	56	56	56	56	56	56	56	56	56	56	56	56	56	56	56	56	56	56	55	55	55	55	55	55	54	54	52	52
				Exposed	56	56	56	56	56	56	56	56	56	56	56	56	56	56	56	56	56	56	56	56	56	56	56	56	56	56	56	56	56	56	56	56	55	55	55	54	52	55	52	49	0	0
		11:12	42.5	Non-Exposed	59	59	59	59	59	59	59	59	59	59	59	59	59	59	59	59	59	59	59	59	59	59	59	59	59	59	59	59	59	59	59	59	58	58	58	57	57	55	56	56	52	52
				Exposed	59	59	59	59	59	59	59	59	59	59	59	59	59	59	59	59	59	59	59	59	59	59	59	59	59	59	59	59	59	59	59	59	58	55	58	54	52	57	52	49	0	0
		12:12	45	Non-Exposed	63	63	63	63	63	63	63	63	63	63	63	63	63	63	63	63	63	63	63	63	63	63	63	63	63	63	63	63	63	63	63	63	62	62	62	61	61	61	60	60	59	59
				Exposed	63	63	63	63	63	63	63	63	63	63	63	63	63	63	63	63	63	63	63	63	63	63	63	63	63	63	63	63	63	63	63	63	62	62	62	61	58	61	58	55	60	54
	C	Flat	0	Non-Exposed	52	52	52	52	52	52	52	52	52	52	52	52	52	52	52	52	52	52	52	52	52	52	52	52	52	52	52	52	52	52	52	52	52	52	52	52	52	51	52	52	48	52
				Exposed	52	52	52	52	52	52	52	52	52	52	52	52	52	52	52	52	52	52	52	52	52	52	52	52	52	52	52	52	52	52	52	52	52	52	0	52	49	0	52	46	0	0
		1:12	4.8	Non-Exposed	49	49	49	49	49	49	49	49	49	49	49	49	49	49	49	49	49	49	49	49	49	49	49	49	49	49	49	49	49	49	49	49	49	49	49	49	49	49	49	49	48	49
				Exposed	49	49	49	49	49	49	49	49	49	49	49	49	49	49	49	49	49	49	49	49	49	49	49	49	49	49	49	49	49	49	49	49	49	49	0	49	49	0	49	46	0	0
		2:12	9.5	Non-Exposed	46	46	46	46	46	46	46	46	46	46	46	46	46	46	46	46	46	46	46	46	46	46	46	46	46	46	46	46	46	46	46	46	46	46	46	46	46	46	46	46	45	46
				Exposed	46	46	46	46	46	46	46	46	46	46	46	46	46	46	46	46	46	46	46	46	46	46	46	46	46	46	46	46	46	46	46	46	46	45	0	46	0	0	46	0	0	0
		3:12	14.0	Non-Exposed	44	44	44	44	44	44	44	44	44	44	44	44	44	44	44	44	44	44	44	44	44	44	44	44	44	44	44	44	44	44	44	44	44	44	44	44	44	44	44	44	44	44
				Exposed	44	44	44	44	44	44	44	44	44	44	44	44	44	44	44	44	44	44	44	44	44	44	44	44	44	44	44	44	44	44	44	44	44	44	0	44	0	0	44	0	0	0
		4:12	18.4	Non-Exposed	44	44	44	44	44	44	44	44	44	44	44	44	44	44	44	44	44	44	44	44	44	44	44	44	44	44	44	44	44	44	44	44	44	44	44	44	44	44	44	44	44	44
				Exposed	44	44	44	44	44	44	44	44	44	44	44	44	44	44	44	44	44	44	44	44	44	44	44	44	44	44	44	44	44	44	44	44	44	44	0	44	0	0	44	0	0	0
		5:12	22.6	Non-Exposed	45	45	45	45	45	45	45	45	45	45	45	45	45	45	45	45	45	45	45	45	45	45	45	45	45	45	45	45	45	45	45	45	45	45	45	45	45	45	45	45	45	45
				Exposed	45	45	45	45	45	45	45	45	45	45	45	45	45	45	45	45	45	45	45	45	45	45	45	45	45	45	45	45	45	45	45	45	45	45	45	45	45	0	45	0	0	0
		6:12	26.6	Non-Exposed	47	47	47	47	47	47	47	47	47	47	47	47	47	47	47	47	47	47	47	47	47	47	47	47	47	47	47	47	47	47	47	47	47	47	47	47	47	47	47	47	47	47
				Exposed	47	47	47	47	47	47	47	47	47	47	47	47	47	47	47	47	47	47	47	47	47	47	47	47	47	47	47	47	47	47	47	47	47	47	47	47	46	0	47	0	0	0
		7:12	30.3	Non-Exposed	49	49	49	49	49	49	49	49	49	49	49	49	49	49	49	49	49	49	49	49	49	49	49	49	49	49	49	49	49	49	49	49	49	49	49	49	49	49	49	49	49	49
				Exposed	49	49	49	49	49	49	49	49	49	49	49	49	49	49	49	49	49	49	49	49	49	49	49	49	49	49	49	49	49	49	49	49	49	49	49	49	49	49	49	49	49	0
		8:12	33.7	Non-Exposed	51	51	51	51	51	51	51	51	51	51	51	51	51	51	51	51	51	51	51	51	51	51	51	51	51	51	51	51	51	51	51	51	51	51	51	51	51	51	50	50	50	50
				Exposed	51	51	51	51	51	51	51	51	51	51	51	51	51	51	51	51	51	51	51	51	51	51	51	51	51	51	51	51	51	51	51	51	51	51	51	51	51	51	50	49	0	0
		9:12	36.9	Non-Exposed	53	53	53	53	53	53	53	53	53	53	53	53	53	53	53	53	53	53	53	53	53	53	53	53	53	53	53	53	53	53	53	53	53	53	53	53	53	53	52	52	52	52
				Exposed	53	53	53	53	53	53	53	53	53	53	53	53	53	53	53	53	53	53	53	53	53	53	53	53	53	53	53	53	53	53	53	53	53	53	53	53	52	53	52	49	0	0
		10:12	39.8	Non-Exposed	56	56	56	56	56	56	56	56	56	56	56	56	56	56	56	56	56	56	56	56	56	56	56	56	56	56	56	56	56	56	55	55	55	55	55	55	55	55	54	54	52	52
				Exposed	56	56	56	56	56	56	56	56	56	56	56	56	56	56	56	56	56	56	56	56	56	56	56	56	56	56	56	56	56	56	55	53	55	53	50	54	50	47	0	47	45	0
		11:12	42.5	Non-Exposed	59	59	59	59	59	59	59	59	59	59	59	59	59	59	59	59	59	59	59	59	59	59	59	59	59	59	59	59	59	59	58	58	58	57	57	57	56	56	54	55	55	51
				Exposed	59	59	59	59	59	59	59	59	59	59	59	59	59	59	59	59	59	59	59	59	59	59	59	59	59	59	59	59	59	59	58	57	58	56	53	57	53	50	56	50	47	0
		12:12	45	Non-Exposed	63	63	63	63	63	63	63	63	63	63	63	63	63	63	63	63	63	63	63	63	63	63	63	63	62	62	62	61	61	61	59	59	57	58	58	54	57	57	51	56	55	48
				Exposed	63	63	63	63	63	63	63	63	63	63	63	63	63	63	63	63	63	63	63	63	63	63	63	63	62	61	62	60	57	61	56	53	59	53	50	58	50	47	0	47	45	0
	D	Flat	0	Non-Exposed	52	52	52	52	52	52	52	52	52	52	52	52	52	52	52	52	52	52	52	52	52	52	52	52	52	52	52	52	52	52	52	52	52	52	49	52	52	46	52	52	0	52
				Exposed	52	52	52	52	52	52	52	52	52	52	52	52	52	52	52	52	52	52	52	52	52	52	52	52	52	52	52	52	52	52	52	50	0	52	47	0	52	45	0	49	0	0
		1:12	4.8	Non-Exposed	49	49	49	49	49	49	49	49	49	49	49	49	49	49	49	49	49	49	49	49	49	49	49	49	49	49	49	49	49	49	49	49	49	49	49	49	49	46	49	49	0	49
				Exposed	49	49	49	49	49	49	49	49	49	49	49	49	49	49	49	49	49	49	49	49	49	49	49	49	49	49	49	49	49	49	49	49	0	49	47	0	49	45	0	49	0	0
		2:12	9.5	Non-Exposed	46	46	46	46	46	46	46	46	46	46	46	46	46	46	46	46	46	46	46	46	46	46	46	46	46	46	46	46	46	46	46	46	46	46	46	46	46	0	46	45	0	46
				Exposed	46	46	46	46	46	46	46	46	46	46	46	46	46	46	46	46	46	46	46	46	46	46	46	46	46	46	46	46	0	46	0	0	46	0	0	46	0	0	45	0	0	0
		3:12	14.0	Non-Exposed	44	44	44	44	44	44	44	44	44	44	44	44	44	44	44	44	44	44	44	44	44	44	44	44	44	44	44	44	44	44	44	44	44	44	44	44	44	0	44	44	0	44
				Exposed	44	44	44	44	44	44	44	44	44	44	44	44	44	44	44	44	44	44	44	44	44	44	44	44	44	44	44	44	44	44	44	44	0	44	0	0	44	0	0	44	0	0	0
		4:12	18.4	Non-Exposed	44	44	44	44	44	44	44	44	44	44	44	44	44	44	44	44	44	44	44	44	44	44	44	44	44	44	44	44	44	44	44	44	44	44	44	44	44	0	44	44	0	44
				Exposed	44	44	44	44	44	44	44	44	44	44	44	44	44	44	44	44	44	44	44	44	44	44	44	44	44	44	44	44	0	44	0	0	44	0	0	44	0	0	44	0	0	0
		5:12	22.6	Non-Exposed	45	45	45	45	45	45	45	45	45	45	45	45	45	45	45	45	45	45	45	45	45	45	45	45	45	45	45	45	45	45	45	45	45	45	45	45	45	45	45	45	43	45
				Exposed	45	45	45	45	45	45	45	45	45	45	45	45	45	45	45	45	45	45	45	45	45	45	45	45	45	45	45	45	45	45	45	45	45	45	0	45	0	0	45	0	0	0
		6:12	26.6	Non-Exposed	47	47	47	47	47	47	47	47	47	47	47	47	47	47	47	47	47	47	47	47	47	47	47	47	47	47	47	47	47	47	47	47	47	47	47	47	46	47	47	43	47	43
				Exposed	47	47	47	47	47	47	47	47	47	47	47	47	47	47	47	47	47	47	47	47	47	47	47	47	47	47	47	47	47	47	47	47	0	47	45	0	47	0	0	47	0	0	0
		7:12	30.3	Non-Exposed	49	49	49	49	49	49	49	49	49	49	49	49	49	49	49	49	49	49	49	49	49	49	49	49	49	49	49	49	49	49	49	49	49	49	49	48	48	48	48	48	48	48
				Exposed	49	49	49	49	49	49	49	49	49	49	49	49	49	49	49	49	49	49	49	49	49	49	49	49	49	49	49	49	49	49	49	49	49	49	49	48	48	0	48	45	0	0
		8:12	33.7	Non-Exposed	51	51	51	51	51	51	51	51	51	51	51	51	51	51	51	51	51	51	51	51	51	51	51	51	51	51	51	51	51	51	51	51	51	51	51	50	50	50	49	49	48	49
				Exposed	51	51	51	51	51	51	51	51	51	51	51	51	51	51	51	51	51	51	51	51	51	51	51	51	51	51	51	51	51	51	51	51	51	50	51	50	48	0	47	45	0	0
		9:12	36.9	Non-Exposed	53	53	53	53	53	53	53	53	53	53	53	53	53	53	53	53	53	53	53	53	53	53	53	53	53	53	53	53	53	53	53	53	52	52	52	51	51	51	51	51	48	51
				Exposed	53	53	53	53	53	53	53	53	53	53	53	53	53	53	53	53	53	53	53	53	53	53	53	53	53	53	53	53	53	53	53	53	52	50	52	50	48	0	47	45	0	0
		10:12	39.8	Non-Exposed	56	56	56	56	56	56	56	56	56	56	56	56	56	56	56	56	56	56	56	56	56	56	56	56	56	56	56	55	55	55	54	54	54	53	53	51	52	52	48	52	48	52
				Exposed	56	56	56	56	56	56	56	56	56	56	56	56	56	56	56	56	56	56	56	56	56	56	56	56	56	56	56	55	53	55	53	50	54	50	47	0	47	45	0	47	0	0
		11:12	42.5	Non-Exposed	59	59	59	59	59	59	59	59	59	59	59	59	59	59	59	59	59	59	59	59	59	59	59	59	59	59	58	58	58	57	57	57	56	56	54	55	55	51	54	54	48	54
				Exposed	59	59	59	59	59	59	59	59	59	59	59	59	59	59	59	59	59	59	59	59	59	59	59	59	59	59	58	57	58	56	53	57	53	50	56	50	47	0	47	45	0	0
		12:12	45	Non-Exposed	63	63	63	63	63	63	63	63	63	63	63	63	63	63	63	63	63	63	63	63	63	63	63	63	62	62	62	61	61	61	59	59	57	58	58	54	57	57	51	56	55	48
				Exposed	63	63	63	63	63	63	63	63	63	63	63	63	63	63	63	63	63	63	63	63	63	63	63	63	62	61	62	60	57	61	56	53	59	53	50	58	50	47	0	47	45	0

Tamarack 2.3 Rail – Gable Flush-Mount on 30 Foot Maximum Mean Roof Height – Landscape – Panel Width = 40 Inches or Less

Ground Snow Load	Exposure Category	Roof Pitch	Roof Angle	Wind Speed (mph)	95			100			105			110			115			120			125			130			140			150			160			170			180			190		
				Roof Area	1	2	3	1	2	3	1	2	3	1	2	3	1	2	3	1	2	3	1	2	3	1	2	3	1	2	3	1	2	3	1	2	3	1	2	3	1	2	3	1	2	3
90	B	Flat	0	Non-Exposed	49	49	49	49	49	49	49	49	49	49	49	49	49	49	49	49	49	49	49	49	49	49	49	49	49	49	49	49	49	49	49	49	49	49	49	49	49	49	49	49	49	49
				Exposed	49	49	49	49	49	49	49	49	49	49	49	49	49	49	49	49	49	49	49	49	49	49	49	49	49	49	49	49	49	49	49	49	49	49	49	49	49	49	49	49	49	49
		1:12	4.8	Non-Exposed	46	46	46	46	46	46	46	46	46	46	46	46	46	46	46	46	46	46	46	46	46	46	46	46	46	46	46	46	46	46	46	46	46	46	46	46	46	46	46	46	46	46
				Exposed	46	46	46	46	46	46	46	46	46	46	46	46	46	46	46	46	46	46	46	46	46	46	46	46	46	46	46	46	46	46	46	46	46	46	46	46	46	46	46	46	46	46
		2:12	9.5	Non-Exposed	43	43	43	43	43	43	43	43	43	43	43	43	43	43	43	43	43	43	43	43	43	43	43	43	43	43	43	43	43	43	43	43	43	43	43	43	43	43	43	43	43	43
				Exposed	43	43	43	43	43	43	43	43	43	43	43	43	43	43	43	43	43	43	43	43	43	43	43	43	43	43	43	43	43	43	43	43	43	43	43	43	43	43	43	43	43	0
		3:12	14.0	Non-Exposed	42	42	42	42	42	42	42	42	42	42	42	42	42	42	42	42	42	42	42	42	42	42	42	42	42	42	42	42	42	42	42	42	42	42	42	42	42	42	42	42	42	42
				Exposed	42	42	42	42	42	42	42	42	42	42	42	42	42	42	42	42	42	42	42	42	42	42	42	42	42	42	42	42	42	42	42	42	42	42	42	42	42	42	42	42	42	0
		4:12	18.4	Non-Exposed	42	42	42	42	42	42	42	42	42	42	42	42	42	42	42	42	42	42	42	42	42	42	42	42	42	42	42	42	42	42	42	42	42	42	42	42	42	42	42	42	42	42
				Exposed	42	42	42	42	42	42	42	42	42	42	42	42	42	42	42	42	42	42	42	42	42	42	42	42	42	42	42	42	42	42	42	42	42	42	42	42	42	42	42	42	42	0
		5:12	22.6	Non-Exposed	43	43	43	43	43	43	43	43	43	43	43	43	43	43	43	43	43	43	43	43	43	43	43	43	43	43	43	43	43	43	43	43	43	43	43	43	43	43	43	43	43	43
				Exposed	43	43	43	43	43	43	43	43	43	43	43	43	43	43	43	43	43	43	43	43	43	43	43	43	43	43	43	43	43	43	43	43	43	43	43	43	43	43	43	43	43	43
		6:12	26.6	Non-Exposed	44	44	44	44	44	44	44	44	44	44	44	44	44	44	44	44	44	44	44	44	44	44	44	44	44	44	44	44	44	44	44	44	44	44	44	44	44	44	44	44	44	44
				Exposed	44	44	44	44	44	44	44	44	44	44	44	44	44	44	44	44	44	44	44	44	44	44	44	44	44	44	44	44	44	44	44	44	44	44	44	44	44	44	44	44	44	44
		7:12	30.3	Non-Exposed	46	46	46	46	46	46	46	46	46	46	46	46	46	46	46	46	46	46	46	46	46	46	46	46	46	46	46	46	46	46	46	46	46	46	46	46	46	46	46	46	46	46
				Exposed	46	46	46	46	46	46	46	46	46	46	46	46	46	46	46	46	46	46	46	46	46	46	46	46	46	46	46	46	46	46	46	46	46	46	46	46	46	46	46	46	46	0
		8:12	33.7	Non-Exposed	48	48	48	48	48	48	48	48	48	48	48	48	48	48	48	48	48	48	48	48	48	48	48	48	48	48	48	48	48	48	48	48	48	48	48	48	48	48	48	48	48	48
				Exposed	48	48	48	48	48	48	48	48	48	48	48	48	48	48	48	48	48	48	48	48	48	48	48	48	48	48	48	48	48	48	48	48	48	48	48	48	48	48	48	48	48	0
		9:12	36.9	Non-Exposed	50	50	50	50	50	50	50	50	50	50	50	50	50	50	50	50	50	50	50	50	50	50	50	50	50	50	50	50	50	50	50	50	50	50	50	50	50	50	50	50	50	50
				Exposed	50	50	50	50	50	50	50	50	50	50	50	50	50	50	50	50	50	50	50	50	50	50	50	50	50	50	50	50	50	50	50	50	50	50	50	50	50	50	50	50	49	0
		10:12	39.8	Non-Exposed	53	53	53	53	53	53	53	53	53	53	53	53	53	53	53	53	53	53	53	53	53	53	53	53	53	53	53	53	53	53	53	53	53	53	53	53	53	53	52	52	52	52
				Exposed	53	53	53	53	53	53	53	53	53	53	53	53	53	53	53	53	53	53	53	53	53	53	53	53	53	53	53	53	53	53	53	53	53	53	53	53	53	52	53	52	49	0
		11:12	42.5	Non-Exposed	56	56	56	56	56	56	56	56	56	56	56	56	56	56	56	56	56	56	56	56	56	56	56	56	56	56	56	56	56	56	56	56	55	55	55	55	55	55	54	54	52
				Exposed	56	56	56	56	56	56	56	56	56	56	56	56	56	56	56	56	56	56	56	56	56	56	56	56	56	56	56	56	56	56	56	56	55	55	55	54	52	55	52	49	0
		12:12	45	Non-Exposed	59	59	59	59	59	59	59	59	59	59	59	59	59	59	59	59	59	59	59	59	59	59	59	59	59	59	59	59	59	59	59	59	58	58	58	57	57	55	56	56	52
				Exposed	59	59	59	59	59	59	59	59	59	59	59	59	59	59	59	59	59	59	59	59	59	59	59	59	59	59	59	59	59	59	59	59	58	55	58	54	52	57	52	49	0
	C	Flat	0	Non-Exposed	49	49	49	49	49	49	49	49	49	49	49	49	49	49	49	49	49	49	49	49	49	49	49	49	49	49	49	49	49	49	49	49	49	49	49	49	49	49	49	49	49	48
				Exposed	49	49	49	49	49	49	49	49	49	49	49	49	49	49	49	49	49	49	49	49	49	49	49	49	49	49	49	49	49	49	49	49	49	49	0	49	49	0	49	46	0
		1:12	4.8	Non-Exposed	46	46	46	46	46	46	46	46	46	46	46	46	46	46	46	46	46	46	46	46	46	46	46	46	46	46	46	46	46	46	46	46	46	46	46	46	46	46	46	46	46	46
				Exposed	46	46	46	46	46	46	46	46	46	46	46	46	46	46	46	46	46	46	46	46	46	46	46	46	46	46	46	46	46	46	46	46	46	46	0	46	46	0	46	46	0
		2:12	9.5	Non-Exposed	43	43	43	43	43	43	43	43	43	43	43	43	43	43	43	43	43	43	43	43	43	43	43	43	43	43	43	43	43	43	43	43	43	43	43	43	43	43	43	43	43	43
				Exposed	43	43	43	43	43	43	43	43	43	43	43	43	43	43	43	43	43	43	43	43	43	43	43	43	43	43	43	43	43	43	43	43	43	43	0	43	43	0	43	0	0
		3:12	14.0	Non-Exposed	42	42	42	42	42	42	42	42	42	42	42	42	42	42	42	42	42	42	42	42	42	42	42	42	42	42	42	42	42	42	42	42	42	42	42	42	42	42	42	42	42	42
				Exposed	42	42	42	42	42	42	42	42	42	42	42	42	42	42	42	42	42	42	42	42	42	42	42	42	42	42	42	42	42	42	42	42	42	42	0	42	42	0	42	0	0
		4:12	18.4	Non-Exposed	42	42	42	42	42	42	42	42	42	42	42	42	42	42	42	42	42	42	42	42	42	42	42	42	42	42	42	42	42	42	42	42	42	42	42	42	42	42	42	42	42	42
				Exposed	42	42	42	42	42	42	42	42	42	42	42	42	42	42	42	42	42	42	42	42	42	42	42	42	42	42	42	42	42	42	42	42	42	42	0	42	42	0	42	0	0
		5:12	22.6	Non-Exposed	43	43	43	43	43	43	43	43	43	43	43	43	43	43	43	43	43	43	43	43	43	43	43	43	43	43	43	43	43	43	43	43	43	43	43	43	43	43	43	43	43	43
				Exposed	43	43	43	43	43	43	43	43	43	43	43	43	43	43	43	43	43	43	43	43	43	43	43	43	43	43	43	43	43	43	43	43	43	43	43	43	43	0	43	0	0
90		6:12	26.6	Non-Exposed	44	44	44	44	44	44	44	44	44	44	44	44	44	44	44	44	44	44	44	44	44	44	44	44	44	44	44	44	44	44	44	44	44	44	44	44	44	44	44	44	44	44
				Exposed	44	44	44	44	44	44	44	44	44	44	44	44	44	44	44	44	44	44	44	44	44	44	44	44	44	44	44	44	44	44	44	44	44	44	44	44	44	0	44	0	0
		7:12	30.3	Non-Exposed	46	46	46	46	46	46	46	46	46	46	46	46	46	46	46	46	46	46	46	46	46	46	46	46	46	46	46	46	46	46	46	46	46	46	46	46	46	46	46	46	46	46
				Exposed	46	46	46	46	46	46	46	46	46	46	46	46	46	46	46	46	46	46	46	46	46	46	46	46	46	46	46	46	46	46	46	46	46	46	46	46	46	46	46	46	46	0
		8:12	33.7	Non-Exposed	48	48	48	48	48	48	48	48	48	48	48	48	48	48	48	48	48	48	48	48	48	48	48	48	48	48	48	48	48	48	48	48	48	48	48	48	48	48	48	48	48	48
				Exposed	48	48	48	48	48	48	48	48	48	48	48	48	48	48	48	48	48	48	48	48	48	48	48	48	48	48	48	48	48	48	48	48	48	48	48	48	48	48	48	48	48	0
		9:12	36.9	Non-Exposed	50	50	50	50	50	50	50	50	50	50	50	50	50	50	50	50	50	50	50	50	50	50	50	50	50	50	50	50	50	50	50	50	50	50	50	50	50	50	50	50	50	50
				Exposed	50	50	50	50	50	50	50	50	50	50	50	50	50	50	50	50	50	50	50	50	50	50	50	50	50	50	50	50	50	50	50	50	50	50	50	50	50	50	50	49	0
		10:12	39.8	Non-Exposed	53	53	53	53	53	53	53	53	53	53	53	53	53	53	53	53	53	53	53	53	53	53	53	53	53	53	53	53	53	53	53	53	53	53	53	53	53	53	52	52	52
				Exposed	53	53	53	53	53	53	53	53	53	53	53	53	53	53	53	53	53	53	53	53	53	53	53	53	53	53	53	53	53	53	53	53	53	53	53	53	53	52	53	52	49	0
		11:12	42.5	Non-Exposed	56	56	56	56	56	56	56	56	56	56	56	56	56	56	56	56	56	56	56	56	56	56	56	56	56	56	56	56	56	56	56	56	55	55	55	55	55	55	54	54	52
				Exposed	56	56	56	56	56	56	56	56	56	56	56	56	56	56	56	56	56	56	56	56	56	56	56	56	56	56	56	56	56	56	56	56	55	55	55	54	52	55	52	49	0
		12:12	45	Non-Exposed	59	59	59	59	59	59	59	59	59	59	59	59	59	59	59	59	59	59	59	59	59	59	59	59	59	59	59	59	59	59	59	59	58	58	58	57	57	55	56	56	52
				Exposed	59	59	59	59	59	59	59	59	59	59	59	59	59	59	59	59	59	59	59	59	59	59	59	59	59	59	59	59	59	59	59	59	58	55	58	54	52	57	52	49	0
	D	Flat	0	Non-Exposed	49	49	49	49	49	49	49	49	49	49	49	49	49	49	49	49	49	49	49	49	49	49	49	49	49	49	49	49	49	49	49	49	49	49	49	49	49	46	49	49	0
				Exposed	49	49	49	49	49	49	49	49	49	49	49	49	49	49	49	49	49	49	49	49	49	49	49	49	49	49	49	49	49	49	49	49	49	47	0	49	45	0	49	0	0
		1:12	4.8	Non-Exposed	46	46	46	46	46	46	46	46	46	46	46	46	46	46	46	46	46	46	46	46	46	46	46	46	46	46	46	46	46	46	46	46	46	46	46	46	46	46	46	46	46	0
				Exposed	46	46	46	46	46	46	46	46	46	46	46	46	46	46	46	46	46	46	46	46	46	46	46	46	46	46	46	46	46	46	46	46	0	46	46	0	46	45	0	46	0	0
		2:12	9.5	Non-Exposed	43	43	43	43	43	43	43	43	43	43	43	43	43	43	43	43	43	43	43	43	43	43	43	43	43	43	43	43	43	43	43	43	43	43	43	43	43	0	43	0	0
				Exposed	43	43	43	43	43	43	43	43	43	43	43	43	43	43	43	43	43	43	43	43	43	43	43	43	43	43	43	43	43	43	43	43	43	43	0	43	0	0	43	0	0
		3:12	14.0	Non-Exposed	42	42	42	42	42	42	42	42	42	42	42	42	42	42	42	42	42	42	42	42	42	42	42	42	42	42	42	42	42	42	42	42	42	42	42	42	42	0	42	42	0
				Exposed	42	42	42	42	42	42	42	42	42	42	42	42	42	42	42	42	42	42	42	42	42	42	42	42	42	42	42	42	42	42	42	42	42	42	0	42	0	0	42	0	0
		4:12	18.4	Non-Exposed	42	42	42	42	42	42	42	42	42	42	42	42	42	42	42	42	42	42	42	42	42	42	42	42	42	42	42	42	42	42	42	42	42	42	42	42	42	0	42	42	0
				Exposed	42	42	42	42	42	42	42	42	42	42	42	42	42	42	42	42	42	42	42	42	42	42	42	42	42	42	42	42	42	42	42	42	42	42	0	42	0	0	42	0	0
		5:12	22.6	Non-Exposed	43	43	43	43	43	43	43	43	43	43	43	43	43	43	43	43	43	43	43	43	43	43	43	43	43	43	43	43	43	43	43	43	43	43	43	43	43	43	43	43	43	43
				Exposed	43	43	43	43	43	43	43	43	43	43	43	43	43	43	43	43	43	43	43	43	43	43	43	43	43	43	43	43	43	43	43	43	43	43	0	43	0	0	43	0	0
		6:12	26.6	Non-Exposed	44	44	44	44	44	44	44	44	44	44	44	44	44	44	44	44	44	44	44	44	44	44	44	44	44	44	44	44	44	44	44	44	44	44	44	44	44	44	44	44	44	43
				Exposed	44	44	44	44	44	44	44	44	44	44	44	44	44	44	44	44	44	44	44	44	44	44	44	44	44	44	44	44	44	44	44	44	44	44	0	44	44	0	44	0	0
		7:12	30.3	Non-Exposed	46	46	46	46	46	46	46	46	46	46	46	46	46	46	46	46	46	46	46	46	46	46	46	46	46	46	46	46	46	46	46	46	46	46	46	46	46	46	46	46	46	46
				Exposed	46	46	46	46	46	46	46	46	46	46	46	46	46	46	46	46	46	46	46	46	46	46	46	46	46	46	46	46	46	46	46	46	46	46	46	46	46	0	46	45	0
		8:12	33.7	Non-Exposed	48	48	48	48	48	48	48	48	48	48	48	48	48	48	48	48	48	48	48	48	48	48	48	48	48	48	48	48	48	48	48	48	48	48	48	48	48	48	47	47	47
				Exposed	48	48	48	48	48	48	48	48	48	48	48	48	48	48	48	48	48	48	48	48	48	48	48	48	48	48	48	48	48	48	48	48	48	48	48	48	48	0	47	45	0
		9:12	36.9	Non-Exposed	50	50	50	50	50	50	50	50	50	50	50	50	50	50	50	50	50	50	50	50	50	50	50	50	50	50	50	50	50	50	50	50	50	50	50	49	49	49	49	49	48
				Exposed	50	50	50	50	50	50	50	50	50	50	50	50	50	50	50	50	50	50	50	50	50	50	50	50	50	50	50	50	50	50	50	50	50	50	49	48	0	47	45	0	
		10:12	39.8	Non-Exposed	53	53	53	53	53	53	53	53	53	53	53	53	53	53	53	53	53	53	53	53	53	53	53	53	53	53	53	53	53	53	53	53	52	52	52	51	51	51	50	50	48
				Exposed	53	53	53	53	53	53	53	53	53	53	53	53	53	53	53	53	53	53	53	53	53	53	53	53	53	53	53	53	53	53	53	53	52	50	52	50	47	0	47	45	0
		11:12	42.5	Non-Exposed	56	56	56	56	56	56	56	56	56	56	56	56	56	56	56	56	56	56	56	56	56	56	56	56	56	56	56	56	56	56	55	55	54	54	54	53	53	51	52	52	48
				Exposed	56	56	56	56	56	56	56	56	56	56	56	56	56	56	56	56	56	56	56	56	56	56	56	56	56	56	56	56	56	56	55	53	55	53	50	54	50	47	0	47	45	0
		12:12	45	Non-Exposed	59	59	59	59	59	59	59	59	59	59	59	59	59	59	59	59	59	59	59	59	59	59	59	59	59	59	59	59	59	59	58	58	58	57	57	57	56	56	54	55	48
				Exposed	59	59	59	59	59	59	59	59	59	59	59	59	59	59	59	59	59	59	59	59	59	59	59	59	59	59	59	59	59	58	57	58	56	53	57	53	50	56	50	47	0	47	45	0

Tamarack 2.3 Rail – Gable Flush-Mount on 30 Foot Maximum Mean Roof Height – Landscape – Panel Width = 40 Inches or Less

Ground Snow Load	Exposure Category	Roof Pitch	Roof Angle	Wind Speed (mph)	95			100			105			110			115			120			125			130			140			150			160			170			180			190		
				Roof Area	1	2	3	1	2	3	1	2	3	1	2	3	1	2	3	1	2	3	1	2	3	1	2	3	1	2	3	1	2	3	1	2	3	1	2	3	1	2	3	1	2	3
		Flat	0	Non-Exposed	47	47	47	47	47	47	47	47	47	47	47	47	47	47	47	47	47	47	47	47	47	47	47	47	47	47	47	47	47	47	47	47	47	47	47	47	47	47	47	47	47	47
				Exposed	47	47	47	47	47	47	47	47	47	47	47	47	47	47	47	47	47	47	47	47	47	47	47	47	47	47	47	47	47	47	47	47	47	47	47	47	47	47	47	47	47	47
		1:12	4.8	Non-Exposed	44	44	44	44	44	44	44	44	44	44	44	44	44	44	44	44	44	44	44	44	44	44	44	44	44	44	44	44	44	44	44	44	44	44	44	44	44	44	44	44	44	44
				Exposed	44	44	44	44	44	44	44	44	44	44	44	44	44	44	44	44	44	44	44	44	44	44	44	44	44	44	44	44	44	44	44	44	44	44	44	44	44	44	44	44	44	44
		2:12	9.5	Non-Exposed	41	41	41	41	41	41	41	41	41	41	41	41	41	41	41	41	41	41	41	41	41	41	41	41	41	41	41	41	41	41	41	41	41	41	41	41	41	41	41	41	41	41
				Exposed	41	41	41	41	41	41	41	41	41	41	41	41	41	41	41	41	41	41	41	41	41	41	41	41	41	41	41	41	41	41	41	41	41	41	41	41	41	41	41	41	41	0
		3:12	14.0	Non-Exposed	40	40	40	40	40	40	40	40	40	40	40	40	40	40	40	40	40	40	40	40	40	40	40	40	40	40	40	40	40	40	40	40	40	40	40	40	40	40	40	40	40	40
				Exposed	40	40	40	40	40	40	40	40	40	40	40	40	40	40	40	40	40	40	40	40	40	40	40	40	40	40	40	40	40	40	40	40	40	40	40	40	40	40	40	40	40	0
		4:12	18.4	Non-Exposed	40	40	40	40	40	40	40	40	40	40	40	40	40	40	40	40	40	40	40	40	40	40	40	40	40	40	40	40	40	40	40	40	40	40	40	40	40	40	40	40	40	40
				Exposed	40	40	40	40	40	40	40	40	40	40	40	40	40	40	40	40	40	40	40	40	40	40	40	40	40	40	40	40	40	40	40	40	40	40	40	40	40	40	40	40	40	0
		5:12	22.6	Non-Exposed	41	41	41	41	41	41	41	41	41	41	41	41	41	41	41	41	41	41	41	41	41	41	41	41	41	41	41	41	41	41	41	41	41	41	41	41	41	41	41	41	41	41
				Exposed	41	41	41	41	41	41	41	41	41	41	41	41	41	41	41	41	41	41	41	41	41	41	41	41	41	41	41	41	41	41	41	41	41	41	41	41	41	41	41	41	41	41
	B	6:12	26.6	Non-Exposed	42	42	42	42	42	42	42	42	42	42	42	42	42	42	42	42	42	42	42	42	42	42	42	42	42	42	42	42	42	42	42	42	42	42	42	42	42	42	42	42	42	42
				Exposed	42	42	42	42	42	42	42	42	42	42	42	42	42	42	42	42	42	42	42	42	42	42	42	42	42	42	42	42	42	42	42	42	42	42	42	42	42	42	42	42	42	42
		7:12	30.3	Non-Exposed	43	43	43	43	43	43	43	43	43	43	43	43	43	43	43	43	43	43	43	43	43	43	43	43	43	43	43	43	43	43	43	43	43	43	43	43	43	43	43	43	43	43
				Exposed	43	43	43	43	43	43	43	43	43	43	43	43	43	43	43	43	43	43	43	43	43	43	43	43	43	43	43	43	43	43	43	43	43	43	43	43	43	43	43	43	43	43
		8:12	33.7	Non-Exposed	45	45	45	45	45	45	45	45	45	45	45	45	45	45	45	45	45	45	45	45	45	45	45	45	45	45	45	45	45	45	45	45	45	45	45	45	45	45	45	45	45	45
				Exposed	45	45	45	45	45	45	45	45	45	45	45	45	45	45	45	45	45	45	45	45	45	45	45	45	45	45	45	45	45	45	45	45	45	45	45	45	45	45	45	45	45	45
		9:12	36.9	Non-Exposed	48	48	48	48	48	48	48	48	48	48	48	48	48	48	48	48	48	48	48	48	48	48	48	48	48	48	48	48	48	48	48	48	48	48	48	48	48	48	48	48	48	48
				Exposed	48	48	48	48	48	48	48	48	48	48	48	48	48	48	48	48	48	48	48	48	48	48	48	48	48	48	48	48	48	48	48	48	48	48	48	48	48	48	48	48	48	0
		10:12	39.8	Non-Exposed	50	50	50	50	50	50	50	50	50	50	50	50	50	50	50	50	50	50	50	50	50	50	50	50	50	50	50	50	50	50	50	50	50	50	50	50	50	50	50	50	50	50
				Exposed	50	50	50	50	50	50	50	50	50	50	50	50	50	50	50	50	50	50	50	50	50	50	50	50	50	50	50	50	50	50	50	50	50	50	50	50	50	50	50	50	49	0
		11:12	42.5	Non-Exposed	53	53	53	53	53	53	53	53	53	53	53	53	53	53	53	53	53	53	53	53	53	53	53	53	53	53	53	53	53	53	53	53	53	53	53	53	53	53	53	52	52	52
				Exposed	53	53	53	53	53	53	53	53	53	53	53	53	53	53	53	53	53	53	53	53	53	53	53	53	53	53	53	53	53	53	53	53	53	53	53	53	53	53	52	53	52	49
		12:12	45	Non-Exposed	56	56	56	56	56	56	56	56	56	56	56	56	56	56	56	56	56	56	56	56	56	56	56	56	56	56	56	56	56	56	56	56	56	56	56	56	55	55	55	54	54	52
				Exposed	56	56	56	56	56	56	56	56	56	56	56	56	56	56	56	56	56	56	56	56	56	56	56	56	56	56	56	56	56	56	56	56	56	55	56	54	52	55	52	49	0
		Flat	0	Non-Exposed	47	47	47	47	47	47	47	47	47	47	47	47	47	47	47	47	47	47	47	47	47	47	47	47	47	47	47	47	47	47	47	47	47	47	47	47	47	47	47	47	47	47
				Exposed	47	47	47	47	47	47	47	47	47	47	47	47	47	47	47	47	47	47	47	47	47	47	47	47	47	47	47	47	47	47	47	47	47	47	47	47	47	47	47	47	46	0
		1:12	4.8	Non-Exposed	44	44	44	44	44	44	44	44	44	44	44	44	44	44	44	44	44	44	44	44	44	44	44	44	44	44	44	44	44	44	44	44	44	44	44	44	44	44	44	44	44	44
				Exposed	44	44	44	44	44	44	44	44	44	44	44	44	44	44	44	44	44	44	44	44	44	44	44	44	44	44	44	44	44	44	44	44	44	44	44	0	44	44	0	44	44	0
		2:12	9.5	Non-Exposed	41	41	41	41	41	41	41	41	41	41	41	41	41	41	41	41	41	41	41	41	41	41	41	41	41	41	41	41	41	41	41	41	41	41	41	41	41	41	41	41	41	41
				Exposed	41	41	41	41	41	41	41	41	41	41	41	41	41	41	41	41	41	41	41	41	41	41	41	41	41	41	41	41	41	0	41	41	0	41	0	0	41	0	0	41	0	0
		3:12	14.0	Non-Exposed	40	40	40	40	40	40	40	40	40	40	40	40	40	40	40	40	40	40	40	40	40	40	40	40	40	40	40	40	40	40	40	40	40	40	40	40	40	40	40	40	40	40
				Exposed	40	40	40	40	40	40	40	40	40	40	40	40	40	40	40	40	40	40	40	40	40	40	40	40	40	40	40	40	40	0	40	40	0	40	0	0	40	0	0	40	0	0
		4:12	18.4	Non-Exposed	40	40	40	40	40	40	40	40	40	40	40	40	40	40	40	40	40	40	40	40	40	40	40	40	40	40	40	40	40	40	40	40	40	40	40	40	40	40	40	40	40	40
				Exposed	40	40	40	40	40	40	40	40	40	40	40	40	40	40	40	40	40	40	40	40	40	40	40	40	40	40	40	40	40	0	40	40	0	40	0	0	40	0	0	40	0	0
		5:12	22.6	Non-Exposed	41	41	41	41	41	41	41	41	41	41	41	41	41	41	41	41	41	41	41	41	41	41	41	41	41	41	41	41	41	41	41	41	41	41	41	41	41	41	41	41	41	41
				Exposed	41	41	41	41	41	41	41	41	41	41	41	41	41	41	41	41	41	41	41	41	41	41	41	41	41	41	41	41	41	41	41	41	41	41	41	41	41	41	0	41	0	0
100	C	6:12	26.6	Non-Exposed	42	42	42	42	42	42	42	42	42	42	42	42	42	42	42	42	42	42	42	42	42	42	42	42	42	42	42	42	42	42	42	42	42	42	42	42	42	42	42	42	42	42
				Exposed	42	42	42	42	42	42	42	42	42	42	42	42	42	42	42	42	42	42	42	42	42	42	42	42	42	42	42	42	42	42	42	42	42	42	42	42	42	42	42	42	42	0
		7:12	30.3	Non-Exposed	43	43	43	43	43	43	43	43	43	43	43	43	43	43	43	43	43	43	43	43	43	43	43	43	43	43	43	43	43	43	43	43	43	43	43	43	43	43	43	43	43	43
				Exposed	43	43	43	43	43	43	43	43	43	43	43	43	43	43	43	43	43	43	43	43	43	43	43	43	43	43	43	43	43	43	43	43	43	43	43	43	43	43	43	43	43	0
		8:12	33.7	Non-Exposed	45	45	45	45	45	45	45	45	45	45	45	45	45	45	45	45	45	45	45	45	45	45	45	45	45	45	45	45	45	45	45	45	45	45	45	45	45	45	45	45	45	45
				Exposed	45	45	45	45	45	45	45	45	45	45	45	45	45	45	45	45	45	45	45	45	45	45	45	45	45	45	45	45	45	45	45	45	45	45	45	45	45	45	45	45	45	0
		9:12	36.9	Non-Exposed	48	48	48	48	48	48	48	48	48	48	48	48	48	48	48	48	48	48	48	48	48	48	48	48	48	48	48	48	48	48	48	48	48	48	48	48	48	48	48	48	48	48
				Exposed	48	48	48	48	48	48	48	48	48	48	48	48	48	48	48	48	48	48	48	48	48	48	48	48	48	48	48	48	48	48	48	48	48	48	48	48	48	48	48	48	48	0
		10:12	39.8	Non-Exposed	50	50	50	50	50	50	50	50	50	50	50	50	50	50	50	50	50	50	50	50	50	50	50	50	50	50	50	50	50	50	50	50	50	50	50	50	50	50	50	49	49	48
				Exposed	50	50	50	50	50	50	50	50	50	50	50	50	50	50	50	50	50	50	50	50	50	50	50	50	50	50	50	50	50	50	50	50	50	50	50	50	47	0	47	45	0	0
		11:12	42.5	Non-Exposed	53	53	53	53	53	53	53	53	53	53	53	53	53	53	53	53	53	53	53	53	53	53	53	53	53	53	53	53	53	53	53	53	53	52	52	52	51	51	51	51	51	48
				Exposed	53	53	53	53	53	53	53	53	53	53	53	53	53	53	53	53	53	53	53	53	53	53	53	53	53	53	53	53	53	53	53	53	53	52	50	52	50	47	0	47	45	0
		12:12	45	Non-Exposed	56	56	56	56	56	56	56	56	56	56	56	56	56	56	56	56	56	56	56	56	56	56	56	56	56	56	56	56	56	56	55	55	55	54	54	54	53	53	51	52	52	48
				Exposed	56	56	56	56	56	56	56	56	56	56	56	56	56	56	56	56	56	56	56	56	56	56	56	56	56	56	56	56	56	55	53	55	53	50	54	50	47	0	47	45	0	0
		Flat	0	Non-Exposed	47	47	47	47	47	47	47	47	47	47	47	47	47	47	47	47	47	47	47	47	47	47	47	47	47	47	47	47	47	47	47	47	47	47	47	47	47	46	47	47	47	0
				Exposed	47	47	47	47	47	47	47	47	47	47	47	47	47	47	47	47	47	47	47	47	47	47	47	47	47	47	47	47	47	47	47	0	47	47	0	47	45	0	47	0	0	0
		1:12	4.8	Non-Exposed	44	44	44	44	44	44	44	44	44	44	44	44	44	44	44	44	44	44	44	44	44	44	44	44	44	44	44	44	44	44	44	44	44	44	44	44	44	44	44	44	44	0
				Exposed	44	44	44	44	44	44	44	44	44	44	44	44	44	44	44	44	44	44	44	44	44	44	44	44	44	44	44	44	44	0	44	44	0	44	44	0	44	0	0	0	0	0
		2:12	9.5	Non-Exposed	41	41	41	41	41	41	41	41	41	41	41	41	41	41	41	41	41	41	41	41	41	41	41	41	41	41	41	41	41	41	41	41	41	41	41	41	41	0	41	41	0	0
				Exposed	41	41	41	41	41	41	41	41	41	41	41	41	41	41	41	41	41	41	41	41	41	41	41	41	41	41	41	41	41	0	41	41	0	41	0	0	41	0	0	41	0	0
		3:12	14.0	Non-Exposed	40	40	40	40	40	40	40	40	40	40	40	40	40	40	40	40	40	40	40	40	40	40	40	40	40	40	40	40	40	40	40	40	40	40	40	40	40	0	40	40	0	0
				Exposed	40	40	40	40	40	40	40	40	40	40	40	40	40	40	40	40	40	40	40	40	40	40	40	40	40	40	40	40	40	0	40	0	0	40	0	0	40	0	0	40	0	0
		4:12	18.4	Non-Exposed	40	40	40	40	40	40	40	40	40	40	40	40	40	40	40	40	40	40	40	40	40	40	40	40	40	40	40	40	40	40	40	40	40	40	40	40	40	0	40	40	0	0
				Exposed	40	40	40	40	40	40	40	40	40	40	40	40	40	40	40	40	40	40	40	40	40	40	40	40	40	40	40	40	40	0	40	0	0	40	0	0	40	0	0	40	0	0
		5:12	22.6	Non-Exposed	41	41	41	41	41	41	41	41	41	41	41	41	41	41	41	41	41	41	41	41	41	41	41	41	41	41	41	41	41	41	41	41	41	41	41	41	41	41	41	41	41	41
				Exposed	41	41	41	41	41	41	41	41	41	41	41	41	41	41	41	41	41	41	41	41	41	41	41	41	41	41	41	41	41	0	41	41	0	41	0	0	41	0	0	41	0	0
	D	6:12	26.6	Non-Exposed	42	42	42	42	42	42	42	42	42	42	42	42	42	42	42	42	42	42	42	42	42	42	42	42	42	42	42	42	42	42	42	42	42	42	42	42	42	42	42	42	42	42
				Exposed	42	42	42	42	42	42	42	42	42	42	42	42	42	42	42	42	42	42	42	42	42	42	42	42	42	42	42	42	42	0	42	42	0	42	0	0	42	0	0	42	0	0
		7:12	30.3	Non-Exposed	43	43	43	43	43	43	43	43	43	43	43	43	43	43	43	43	43	43	43	43	43	43	43	43	43	43	43	43	43	43	43	43	43	43	43	43	43	43	43	43	43	43
				Exposed	43	43	43	43	43	43	43	43	43	43	43	43	43	43	43	43	43	43	43	43	43	43	43	43	43	43	43	43	43	43	43	43	43	43	43	43	43	43	0	43	43	0
		8:12	33.7	Non-Exposed	45	45	45	45	45	45	45	45	45	45	45	45	45	45	45	45	45	45	45	45	45	45	45	45	45	45	45	45	45	45	45	45	45	45	45	45	45	45	45	45	45	45
				Exposed	45	45	45	45	45	45	45	45	45	45	45	45	45	45	45	45	45	45	45	45	45	45	45	45	45	45	45	45	45	45	45	45	45	45	45	45	45	45	0	45	45	0
		9:12	36.9	Non-Exposed	48	48	48	48	48	48	48	48	48	48	48	48	48	48	48	48	48	48	48	48	48	48	48	48	48	48	48	48	48	48	48	48	48	48	48	48	48	48	47	47	47	47
				Exposed	48	48	48	48	48	48	48	48	48	48	48	48	48	48	48	48	48	48	48	48	48	48	48	48	48	48	48	48	48	48	48	48	48	48	48	48	48	48	0	47	45	0
		10:12	39.8	Non-Exposed	50	50	50	50	50	50	50	50	50	50	50	50	50	50	50	50	50	50	50	50	50	50	50	50	50	50	50	50	50	50	50	50	50	50	50	50	50	50	49	49	49	48
				Exposed	50	50	50	50	50	50	50	50	50	50	50	50	50	50	50	50	50	50	50	50	50	50	50	50	50	50	50	50	50	50	50	50	50	50	50	50	47	0	47	45	0	0
		11:12	42.5	Non-Exposed	53	53	53	53	53	53	53	53	53	53	53	53	53	53	53	53	53	53	53	53	53	53	53	53	53	53	53	53	53	53	53	53	53	52	52	52	51	51	51	51	51	48
				Exposed	53	53	53	53	53	53	53	53	53	53	53	53	53	53	53	53	53	53	53	53	53	53	53	53	53	53	53	53	53	52	50	52	50	47	0	47	45	0	47	45	0	0
		12:12	45	Non-Exposed	56	56	56	56	56	56	56	56	56	56	56	56	56	56	56	56	56	56	56	56	56	56	56	56	56	56	56	56	56	55	55	55	54	54	54	53	53	51	52	52	48	
				Exposed	56	56	56	56	56	56	56	56	56	56	56	56	56	56	56	56	56	56	56	56	56	56	56	56	56	56	56	56	56	55	53	55	53	50	54	50	47	0	47	45	0	0

Tamarack 2.3 Rail – Gable Flush-Mount on 30 Foot Maximum Mean Roof Height – Landscape – Panel Width = 40 Inches or Less

Ground Snow Load	Exposure Category	Roof Pitch	Roof Angle	Wind Speed (mph)	95			100			105			110			115			120			125			130			140			150			160			170			180			190		
				Roof Area	1	2	3	1	2	3	1	2	3	1	2	3	1	2	3	1	2	3	1	2	3	1	2	3	1	2	3	1	2	3	1	2	3	1	2	3	1	2	3	1	2	3
110	B	Flat	0	Non-Exposed	45	45	45	45	45	45	45	45	45	45	45	45	45	45	45	45	45	45	45	45	45	45	45	45	45	45	45	45	45	45	45	45	45	45	45	45	45	45	45	45	45	45
				Exposed	45	45	45	45	45	45	45	45	45	45	45	45	45	45	45	45	45	45	45	45	45	45	45	45	45	45	45	45	45	45	45	45	45	45	45	45	45	45	45	45	45	45
		1:12	4.8	Non-Exposed	42	42	42	42	42	42	42	42	42	42	42	42	42	42	42	42	42	42	42	42	42	42	42	42	42	42	42	42	42	42	42	42	42	42	42	42	42	42	42	42	42	42
				Exposed	42	42	42	42	42	42	42	42	42	42	42	42	42	42	42	42	42	42	42	42	42	42	42	42	42	42	42	42	42	42	42	42	42	42	42	42	42	42	42	42	42	42
		2:12	9.5	Non-Exposed	39	39	39	39	39	39	39	39	39	39	39	39	39	39	39	39	39	39	39	39	39	39	39	39	39	39	39	39	39	39	39	39	39	39	39	39	39	39	39	39	39	39
				Exposed	39	39	39	39	39	39	39	39	39	39	39	39	39	39	39	39	39	39	39	39	39	39	39	39	39	39	39	39	39	39	39	39	39	39	39	39	39	39	39	39	39	0
		3:12	14.0	Non-Exposed	38	38	38	38	38	38	38	38	38	38	38	38	38	38	38	38	38	38	38	38	38	38	38	38	38	38	38	38	38	38	38	38	38	38	38	38	38	38	38	38	38	38
				Exposed	38	38	38	38	38	38	38	38	38	38	38	38	38	38	38	38	38	38	38	38	38	38	38	38	38	38	38	38	38	38	38	38	38	38	38	38	38	38	38	38	38	0
		4:12	18.4	Non-Exposed	38	38	38	38	38	38	38	38	38	38	38	38	38	38	38	38	38	38	38	38	38	38	38	38	38	38	38	38	38	38	38	38	38	38	38	38	38	38	38	38	38	38
				Exposed	38	38	38	38	38	38	38	38	38	38	38	38	38	38	38	38	38	38	38	38	38	38	38	38	38	38	38	38	38	38	38	38	38	38	38	38	38	38	38	38	38	0
		5:12	22.6	Non-Exposed	39	39	39	39	39	39	39	39	39	39	39	39	39	39	39	39	39	39	39	39	39	39	39	39	39	39	39	39	39	39	39	39	39	39	39	39	39	39	39	39	39	39
				Exposed	39	39	39	39	39	39	39	39	39	39	39	39	39	39	39	39	39	39	39	39	39	39	39	39	39	39	39	39	39	39	39	39	39	39	39	39	39	39	39	39	39	39
		6:12	26.6	Non-Exposed	40	40	40	40	40	40	40	40	40	40	40	40	40	40	40	40	40	40	40	40	40	40	40	40	40	40	40	40	40	40	40	40	40	40	40	40	40	40	40	40	40	40
				Exposed	40	40	40	40	40	40	40	40	40	40	40	40	40	40	40	40	40	40	40	40	40	40	40	40	40	40	40	40	40	40	40	40	40	40	40	40	40	40	40	40	40	0
		7:12	30.3	Non-Exposed	41	41	41	41	41	41	41	41	41	41	41	41	41	41	41	41	41	41	41	41	41	41	41	41	41	41	41	41	41	41	41	41	41	41	41	41	41	41	41	41	41	41
				Exposed	41	41	41	41	41	41	41	41	41	41	41	41	41	41	41	41	41	41	41	41	41	41	41	41	41	41	41	41	41	41	41	41	41	41	41	41	41	41	41	41	41	0
		8:12	33.7	Non-Exposed	43	43	43	43	43	43	43	43	43	43	43	43	43	43	43	43	43	43	43	43	43	43	43	43	43	43	43	43	43	43	43	43	43	43	43	43	43	43	43	43	43	43
				Exposed	43	43	43	43	43	43	43	43	43	43	43	43	43	43	43	43	43	43	43	43	43	43	43	43	43	43	43	43	43	43	43	43	43	43	43	43	43	43	43	43	43	0
		9:12	36.9	Non-Exposed	46	46	46	46	46	46	46	46	46	46	46	46	46	46	46	46	46	46	46	46	46	46	46	46	46	46	46	46	46	46	46	46	46	46	46	46	46	46	46	46	46	46
				Exposed	46	46	46	46	46	46	46	46	46	46	46	46	46	46	46	46	46	46	46	46	46	46	46	46	46	46	46	46	46	46	46	46	46	46	46	46	46	46	46	46	46	0
		10:12	39.8	Non-Exposed	48	48	48	48	48	48	48	48	48	48	48	48	48	48	48	48	48	48	48	48	48	48	48	48	48	48	48	48	48	48	48	48	48	48	48	48	48	48	48	48	48	48
				Exposed	48	48	48	48	48	48	48	48	48	48	48	48	48	48	48	48	48	48	48	48	48	48	48	48	48	48	48	48	48	48	48	48	48	48	48	48	48	48	48	48	48	0
		11:12	42.5	Non-Exposed	51	51	51	51	51	51	51	51	51	51	51	51	51	51	51	51	51	51	51	51	51	51	51	51	51	51	51	51	51	51	51	51	51	51	51	51	51	51	50	50	50	50
				Exposed	51	51	51	51	51	51	51	51	51	51	51	51	51	51	51	51	51	51	51	51	51	51	51	51	51	51	51	51	51	51	51	51	51	51	51	51	50	49	0			
		12:12	45	Non-Exposed	54	54	54	54	54	54	54	54	54	54	54	54	54	54	54	54	54	54	54	54	54	54	54	54	54	54	54	54	54	54	54	54	54	54	54	53	53	53	52	52	52	52
				Exposed	54	54	54	54	54	54	54	54	54	54	54	54	54	54	54	54	54	54	54	54	54	54	54	54	66	54	54	54	54	54	54	54	54	54	54	53	52	53	52	49	0	
	C	Flat	0	Non-Exposed	45	45	45	45	45	45	45	45	45	45	45	45	45	45	45	45	45	45	45	45	45	45	45	45	45	45	45	45	45	45	45	45	45	45	45	45	45	45	45	45	45	45
				Exposed	45	45	45	45	45	45	45	45	45	45	45	45	45	45	45	45	45	45	45	45	45	45	45	45	45	45	45	45	45	45	45	45	45	45	45	0	45	45	0	45	45	0
		1:12	4.8	Non-Exposed	42	42	42	42	42	42	42	42	42	42	42	42	42	42	42	42	42	42	42	42	42	42	42	42	42	42	42	42	42	42	42	42	42	42	42	42	42	42	42	42	42	42
				Exposed	42	42	42	42	42	42	42	42	42	42	42	42	42	42	42	42	42	42	42	42	42	42	42	42	42	42	42	42	42	42	42	42	0	42	42	0	42	42	0			
		2:12	9.5	Non-Exposed	39	39	39	39	39	39	39	39	39	39	39	39	39	39	39	39	39	39	39	39	39	39	39	39	39	39	39	39	39	39	39	39	39	39	39	39	39	39	39	39	39	39
				Exposed	39	39	39	39	39	39	39	39	39	39	39	39	39	39	39	39	39	39	39	39	39	39	39	39	39	39	39	39	39	39	39	39	0	39	39	0	39	0	0	39	0	0
		3:12	14.0	Non-Exposed	38	38	38	38	38	38	38	38	38	38	38	38	38	38	38	38	38	38	38	38	38	38	38	38	38	38	38	38	38	38	38	38	38	38	38	38	38	38	38	38	38	38
				Exposed	38	38	38	38	38	38	38	38	38	38	38	38	38	38	38	38	38	38	38	38	38	38	38	38	38	38	38	38	38	38	38	38	0	38	38	0	38	0	0	38	0	0
		4:12	18.4	Non-Exposed	38	38	38	38	38	38	38	38	38	38	38	38	38	38	38	38	38	38	38	38	38	38	38	38	38	38	38	38	38	38	38	38	38	38	38	38	38	38	38	38	38	38
				Exposed	38	38	38	38	38	38	38	38	38	38	38	38	38	38	38	38	38	38	38	38	38	38	38	38	38	38	38	38	38	38	38	38	0	38	38	0	38	0	0	38	0	0
		5:12	22.6	Non-Exposed	39	39	39	39	39	39	39	39	39	39	39	39	39	39	39	39	39	39	39	39	39	39	39	39	39	39	39	39	39	39	39	39	39	39	39	39	39	39	39	39	39	39
				Exposed	39	39	39	39	39	39	39	39	39	39	39	39	39	39	39	39	39	39	39	39	39	39	39	39	39	39	39	39	39	39	39	39	39	39	39	39	39	0	39	0	0	
110		6:12	26.6	Non-Exposed	40	40	40	40	40	40	40	40	40	40	40	40	40	40	40	40	40	40	40	40	40	40	40	40	40	40	40	40	40	40	40	40	40	40	40	40	40	40	40	40	40	40
				Exposed	40	40	40	40	40	40	40	40	40	40	40	40	40	40	40	40	40	40	40	40	40	40	40	40	40	40	40	40	40	40	40	40	40	40	40	40	40	0	40	0	0	
		7:12	30.3	Non-Exposed	41	41	41	41	41	41	41	41	41	41	41	41	41	41	41	41	41	41	41	41	41	41	41	41	41	41	41	41	41	41	41	41	41	41	41	41	41	41	41	41	41	41
				Exposed	41	41	41	41	41	41	41	41	41	41	41	41	41	41	41	41	41	41	41	41	41	41	41	41	41	41	41	41	41	41	41	41	41	41	41	41	41	41	41	41	41	0
		8:12	33.7	Non-Exposed	43	43	43	43	43	43	43	43	43	43	43	43	43	43	43	43	43	43	43	43	43	43	43	43	43	43	43	43	43	43	43	43	43	43	43	43	43	43	43	43	43	43
				Exposed	43	43	43	43	43	43	43	43	43	43	43	43	43	43	43	43	43	43	43	43	43	43	43	43	43	43	43	43	43	43	43	43	43	43	43	43	43	43	43	43	43	0
		9:12	36.9	Non-Exposed	46	46	46	46	46	46	46	46	46	46	46	46	46	46	46	46	46	46	46	46	46	46	46	46	46	46	46	46	46	46	46	46	46	46	46	46	46	46	46	46	46	46
				Exposed	46	46	46	46	46	46	46	46	46	46	46	46	46	46	46	46	46	46	46	46	46	46	46	46	46	46	46	46	46	46	46	46	46	46	46	46	46	46	46	46	46	0
		10:12	39.8	Non-Exposed	48	48	48	48	48	48	48	48	48	48	48	48	48	48	48	48	48	48	48	48	48	48	48	48	48	48	48	48	48	48	48	48	48	48	48	48	48	48	48	48	48	48
				Exposed	48	48	48	48	48	48	48	48	48	48	48	48	48	48	48	48	48	48	48	48	48	48	48	48	48	48	48	48	48	48	48	48	48	48	48	48	48	48	48	48	48	0
		11:12	42.5	Non-Exposed	51	51	51	51	51	51	51	51	51	51	51	51	51	51	51	51	51	51	51	51	51	51	51	51	51	51	51	51	51	51	51	51	51	51	51	51	51	51	50	50	50	50
				Exposed	51	51	51	51	51	51	51	51	51	51	51	51	51	51	51	51	51	51	51	51	51	51	51	51	51	51	51	51	51	51	51	51	51	51	51	51	50	49	0			
		12:12	45	Non-Exposed	54	54	54	54	54	54	54	54	54	54	54	54	54	54	54	54	54	54	54	54	54	54	54	54	54	54	54	54	54	54	54	54	54	54	54	53	53	53	52	52	52	52
				Exposed	54	54	54	54	54	54	54	54	54	54	54	54	54	54	54	54	54	54	54	54	54	54	54	54	54	54	54	54	54	54	54	54	54	54	54	53	52	53	52	49	0	
	D	Flat	0	Non-Exposed	45	45	45	45	45	45	45	45	45	45	45	45	45	45	45	45	45	45	45	45	45	45	45	45	45	45	45	45	45	45	45	45	45	45	45	45	45	45	45	45	45	0
				Exposed	45	45	45	45	45	45	45	45	45	45	45	45	45	45	45	45	45	45	45	45	45	45	45	45	45	45	45	45	45	45	45	45	0	45	45	0	45	45	0	45	0	0
		1:12	4.8	Non-Exposed	42	42	42	42	42	42	42	42	42	42	42	42	42	42	42	42	42	42	42	42	42	42	42	42	42	42	42	42	42	42	42	42	42	42	42	42	42	42	42	42	42	0
				Exposed	42	42	42	42	42	42	42	42	42	42	42	42	42	42	42	42	42	42	42	42	42	42	42	42	42	42	42	42	42	42	42	42	0	42	42	0	42	42	0	42	0	0
		2:12	9.5	Non-Exposed	39	39	39	39	39	39	39	39	39	39	39	39	39	39	39	39	39	39	39	39	39	39	39	39	39	39	39	39	39	39	39	39	39	39	39	39	39	39	39	39	39	0
				Exposed	39	39	39	39	39	39	39	39	39	39	39	39	39	39	39	39	39	39	39	39	39	39	39	39	39	39	39	39	39	39	39	39	0	39	0	0	39	0	0	39	0	0
		3:12	14.0	Non-Exposed	38	38	38	38	38	38	38	38	38	38	38	38	38	38	38	38	38	38	38	38	38	38	38	38	38	38	38	38	38	38	38	38	38	38	38	38	38	38	38	38	38	0
				Exposed	38	38	38	38	38	38	38	38	38	38	38	38	38	38	38	38	38	38	38	38	38	38	38	38	38	38	38	38	38	38	38	38	0	38	0	0	38	0	0	38	0	0
		4:12	18.4	Non-Exposed	38	38	38	38	38	38	38	38	38	38	38	38	38	38	38	38	38	38	38	38	38	38	38	38	38	38	38	38	38	38	38	38	38	38	38	38	38	38	38	38	38	0
				Exposed	38	38	38	38	38	38	38	38	38	38	38	38	38	38	38	38	38	38	38	38	38	38	38	38	38	38	38	38	38	38	38	38	0	38	0	0	38	0	0	38	0	0
		5:12	22.6	Non-Exposed	39	39	39	39	39	39	39	39	39	39	39	39	39	39	39	39	39	39	39	39	39	39	39	39	39	39	39	39	39	39	39	39	39	39	39	39	39	39	39	39	39	39
				Exposed	39	39	39	39	39	39	39	39	39	39	39	39	39	39	39	39	39	39	39	39	39	39	39	39	39	39	39	39	39	39	39	39	39	39	39	0	39	0	0	39	0	0
		6:12	26.6	Non-Exposed	40	40	40	40	40	40	40	40	40	40	40	40	40	40	40	40	40	40	40	40	40	40	40	40	40	40	40	40	40	40	40	40	40	40	40	40	40	40	40	40	40	40
				Exposed	40	40	40	40	40	40	40	40	40	40	40	40	40	40	40	40	40	40	40	40	40	40	40	40	40	40	40	40	40	40	40	40	0	40	40	0	40	0	0	40	0	0
		7:12	30.3	Non-Exposed	41	41	41	41	41	41	41	41	41	41	41	41	41	41	41	41	41	41	41	41	41	41	41	41	41	41	41	41	41	41	41	41	41	41	41	41	41	41	41	41	41	41
				Exposed	41	41	41	41	41	41	41	41	41	41	41	41	41	41	41	41	41	41	41	41	41	41	41	41	41	41	41	41	41	41	41	41	41	41	41	41	41	41	41	41	41	0
		8:12	33.7	Non-Exposed	43	43	43	43	43	43	43	43	43	43	43	43	43	43	43	43	43	43	43	43	43	43	43	43	43	43	43	43	43	43	43	43	43	43	43	43	43	43	43	43	43	43
				Exposed	43	43	43	43	43	43	43	43	43	43	43	43	43	43	43	43	43	43	43	43	43	43	43	43	43	43	43	43	43	43	43	43	43	43	43	43	43	43	43	43	43	0
		9:12	36.9	Non-Exposed	46	46	46	46	46	46	46	46	46	46	46	46	46	46	46	46	46	46	46	46	46	46	46	46	46	46	46	46	46	46	46	46	46	46	46	46	46	46	45	45	45	45
				Exposed	46	46	46	46	46	46	46	46	46	46	46	46	46	46	46	46	46	46	46	46	46	46	46	46	46	46	46	46	46	46	46	46	46	46	46	46	46	46	45	45	0	
		10:12	39.8	Non-Exposed	48	48	48	48	48	48	48	48	48	48	48	48	48	48	48	48	48	48	48	48	48	48	48	48	48	48	48	48	48	48	48	48	48	48	48	48	48	48	47	47	47	47
				Exposed	48	48	48	48	48	48	48	48	48	48	48	48	48	48	48	48	48	48	48	48	48	48	48	48	48	48	48	48	48	48	48	48	48	48	48	48	48	47	0	47	45	0
		11:12	42.5	Non-Exposed	51	51	51	51	51	51	51	51	51	51	51	51	51	51	51	51	51	51	51	51	51	51	51	51	51	51	51	51	51	51	51	51	51	51	51	51	50	50	50	49	49	48
				Exposed	51	51	51	51	51	51	51	51	51	51	51	51	51	51	51	51	51	51	51	51	51	51	51	51	51	51	51	51	51	51	51	51	51	51	50	51	50	47	0	47	45	0
		12:12	45	Non-Exposed	54	54	54	54	54	54	54	54	54	54	54	54	54	54	54	54	54	54	54	54	54	54	54	54	54	54	54	54	54	54	54	54	54	53	53	53	52	52	51	51	51	48
				Exposed	54	54	54	54	54	54	54	54	54	54	54	54	54	54	54	54	54	54	54	54	54	54	54	54	54	54	54	54	54	54	53	54	53	50	53	50	47	0	47	45	0	

Tamarack 2.3 Rail – Gable Flush-Mount on 30 Foot Maximum Mean Roof Height – Landscape – Panel Width = 40 Inches or Less

Ground Snow Load	Exposure Category	Roof Pitch	Roof Angle	Wind Speed (mph)	95			100			105			110			115			120			125			130			140			150			160			170			180			190		
				Roof Area	1	2	3	1	2	3	1	2	3	1	2	3	1	2	3	1	2	3	1	2	3	1	2	3	1	2	3	1	2	3	1	2	3	1	2	3	1	2	3	1	2	3
120	B	Flat	0	Non-Exposed	43	43	43	43	43	43	43	43	43	43	43	43	43	43	43	43	43	43	43	43	43	43	43	43	43	43	43	43	43	43	43	43	43	43	43	43	43	43	43	43	43	43
				Exposed	43	43	43	43	43	43	43	43	43	43	43	43	43	43	43	43	43	43	43	43	43	43	43	43	43	43	43	43	43	43	43	43	43	43	43	43	43	43	43	43	43	43
		1:12	4.8	Non-Exposed	40	40	40	40	40	40	40	40	40	40	40	40	40	40	40	40	40	40	40	40	40	40	40	40	40	40	40	40	40	40	40	40	40	40	40	40	40	40	40	40	40	40
				Exposed	40	40	40	40	40	40	40	40	40	40	40	40	40	40	40	40	40	40	40	40	40	40	40	40	40	40	40	40	40	40	40	40	40	40	40	40	40	40	40	40	40	40
		2:12	9.5	Non-Exposed	38	38	38	38	38	38	38	38	38	38	38	38	38	38	38	38	38	38	38	38	38	38	38	38	38	38	38	38	38	38	38	38	38	38	38	38	38	38	38	38	38	38
				Exposed	38	38	38	38	38	38	38	38	38	38	38	38	38	38	38	38	38	38	38	38	38	38	38	38	38	38	38	38	38	38	38	38	38	38	38	38	38	38	38	38	38	0
		3:12	14.0	Non-Exposed	37	36	36	38	36	36	38	36	36	38	36	36	38	36	36	38	36	36	38	36	36	38	36	36	38	36	36	38	36	36	38	36	36	38	36	36	38	36	36	38	36	36
				Exposed	37	36	36	38	36	36	38	36	36	38	36	36	38	36	36	38	36	36	38	36	36	38	36	36	38	36	36	38	36	36	38	36	36	38	36	36	38	36	36	38	36	0
		4:12	18.4	Non-Exposed	37	36	36	38	36	36	38	36	36	38	36	36	38	36	36	38	36	36	38	36	36	38	36	36	38	36	36	38	36	36	38	36	36	38	36	36	38	36	36	38	36	36
				Exposed	37	36	36	38	36	36	38	36	36	38	36	36	38	36	36	38	36	36	38	36	36	38	36	36	38	36	36	38	36	36	38	36	36	38	36	36	38	36	36	38	36	0
		5:12	22.6	Non-Exposed	37	37	37	38	37	37	38	37	37	38	37	37	38	37	37	38	37	37	38	37	37	38	37	37	38	37	37	38	37	37	38	37	37	38	37	37	38	37	37	38	37	37
				Exposed	37	37	37	38	37	37	38	37	37	38	37	37	38	37	37	38	37	37	38	37	37	38	37	37	38	37	37	38	37	37	38	37	37	38	37	37	38	37	37	38	37	37
		6:12	26.6	Non-Exposed	38	38	38	38	38	38	38	38	38	38	38	38	38	38	38	38	38	38	38	38	38	38	38	38	38	38	38	38	38	38	38	38	38	38	38	38	38	38	38	38	38	38
				Exposed	38	38	38	38	38	38	38	38	38	38	38	38	38	38	38	38	38	38	38	38	38	38	38	38	38	38	38	38	38	38	38	38	38	38	38	38	38	38	38	38	38	0
		7:12	30.3	Non-Exposed	40	40	40	40	40	40	40	40	40	40	40	40	40	40	40	40	40	40	40	40	40	40	40	40	40	40	40	40	40	40	40	40	40	40	40	40	40	40	40	40	40	40
				Exposed	40	40	40	40	40	40	40	40	40	40	40	40	40	40	40	40	40	40	40	40	40	40	40	40	40	40	40	40	40	40	40	40	40	40	40	40	40	40	40	40	40	0
		8:12	33.7	Non-Exposed	42	42	42	42	42	42	42	42	42	42	42	42	42	42	42	42	42	42	42	42	42	42	42	42	42	42	42	42	42	42	42	42	42	42	42	42	42	42	42	42	42	42
				Exposed	42	42	42	42	42	42	42	42	42	42	42	42	42	42	42	42	42	42	42	42	42	42	42	42	42	42	42	42	42	42	42	42	42	42	42	42	42	42	42	42	42	42
		9:12	36.9	Non-Exposed	44	44	44	44	44	44	44	44	44	44	44	44	44	44	44	44	44	44	44	44	44	44	44	44	44	44	44	44	44	44	44	44	44	44	44	44	44	44	44	44	44	44
				Exposed	44	44	44	44	44	44	44	44	44	44	44	44	44	44	44	44	44	44	44	44	44	44	44	44	44	44	44	44	44	44	44	44	44	44	44	44	44	44	44	44	44	44
		10:12	39.8	Non-Exposed	46	46	46	46	46	46	46	46	46	46	46	46	46	46	46	46	46	46	46	46	46	46	46	46	46	46	46	46	46	46	46	46	46	46	46	46	46	46	46	46	46	46
				Exposed	46	46	46	46	46	46	46	46	46	46	46	46	46	46	46	46	46	46	46	46	46	46	46	46	46	46	46	46	46	46	46	46	46	46	46	46	46	46	46	46	46	0
		11:12	42.5	Non-Exposed	49	49	49	49	49	49	49	49	49	49	49	49	49	49	49	49	49	49	49	49	49	49	49	49	49	49	49	49	49	49	49	49	49	49	49	49	49	49	49	49	49	49
				Exposed	49	49	49	49	49	49	49	49	49	49	49	49	49	49	49	49	49	49	49	49	49	49	49	49	49	49	49	49	49	49	49	49	49	49	49	49	49	49	49	49	49	0
		12:12	45	Non-Exposed	52	52	52	52	52	52	52	52	52	52	52	52	52	52	52	52	52	52	52	52	52	52	52	52	52	52	52	52	52	52	52	52	52	52	52	52	52	52	52	51	51	51
				Exposed	52	52	52	52	52	52	52	52	52	52	52	52	52	52	52	52	52	52	52	52	52	52	52	52	52	52	52	52	52	52	52	52	52	52	52	52	52	52	52	51	49	0
	C	Flat	0	Non-Exposed	43	43	43	43	43	43	43	43	43	43	43	43	43	43	43	43	43	43	43	43	43	43	43	43	43	43	43	43	43	43	43	43	43	43	43	43	43	43	43	43	43	43
				Exposed	43	43	43	43	43	43	43	43	43	43	43	43	43	43	43	43	43	43	43	43	43	43	43	43	43	43	43	43	43	43	43	43	43	43	43	0	43	43	0	43	43	0
		1:12	4.8	Non-Exposed	40	40	40	40	40	40	40	40	40	40	40	40	40	40	40	40	40	40	40	40	40	40	40	40	40	40	40	40	40	40	40	40	40	40	40	40	40	40	40	40	40	40
				Exposed	40	40	40	40	40	40	40	40	40	40	40	40	40	40	40	40	40	40	40	40	40	40	40	40	40	40	40	40	40	40	40	40	40	40	40	0	40	40	0	40	40	0
		2:12	9.5	Non-Exposed	38	38	38	38	38	38	38	38	38	38	38	38	38	38	38	38	38	38	38	38	38	38	38	38	38	38	38	38	38	38	38	38	38	38	38	38	38	38	38	38	38	38
				Exposed	38	38	38	38	38	38	38	38	38	38	38	38	38	38	38	38	38	38	38	38	38	38	38	38	38	38	38	38	38	38	38	38	0	38	38	0	38	0	0	38	0	0
		3:12	14.0	Non-Exposed	37	36	36	38	36	36	38	36	36	38	36	36	38	36	36	38	36	36	38	36	36	38	36	36	38	36	36	38	36	36	38	36	36	38	36	36	38	36	36	38	36	36
				Exposed	37	36	36	38	36	36	38	36	36	38	36	36	38	36	36	38	36	36	38	36	36	38	36	36	38	36	36	38	36	36	38	36	0	38	36	0	38	0	0	38	0	0
		4:12	18.4	Non-Exposed	37	36	36	38	36	36	38	36	36	38	36	36	38	36	36	38	36	36	38	36	36	38	36	36	38	36	36	38	36	36	38	36	36	38	36	36	38	36	36	38	36	36
				Exposed	37	36	36	38	36	36	38	36	36	38	36	36	38	36	36	38	36	36	38	36	36	38	36	36	38	36	36	38	36	36	38	36	0	38	36	0	38	0	0	38	0	0
		5:12	22.6	Non-Exposed	37	37	37	38	37	37	38	37	37	38	37	37	38	37	37	38	37	37	38	37	37	38	37	37	38	37	37	38	37	37	38	37	37	38	37	37	38	37	37	38	37	37
				Exposed	37	37	37	38	37	37	38	37	37	38	37	37	38	37	37	38	37	37	38	37	37	38	37	37	38	37	37	38	37	37	38	37	37	38	37	37	38	37	0	38	0	0
		6:12	26.6	Non-Exposed	38	38	38	38	38	38	38	38	38	38	38	38	38	38	38	38	38	38	38	38	38	38	38	38	38	38	38	38	38	38	38	38	38	38	38	38	38	38	38	38	38	38
				Exposed	38	38	38	38	38	38	38	38	38	38	38	38	38	38	38	38	38	38	38	38	38	38	38	38	38	38	38	38	38	38	38	38	38	38	38	38	38	38	38	38	0	0
		7:12	30.3	Non-Exposed	40	40	40	40	40	40	40	40	40	40	40	40	40	40	40	40	40	40	40	40	40	40	40	40	40	40	40	40	40	40	40	40	40	40	40	40	40	40	40	40	40	40
				Exposed	40	40	40	40	40	40	40	40	40	40	40	40	40	40	40	40	40	40	40	40	40	40	40	40	40	40	40	40	40	40	40	40	40	40	40	40	40	40	40	40	40	0
		8:12	33.7	Non-Exposed	42	42	42	42	42	42	42	42	42	42	42	42	42	42	42	42	42	42	42	42	42	42	42	42	42	42	42	42	42	42	42	42	42	42	42	42	42	42	42	42	42	42
				Exposed	42	42	42	42	42	42	42	42	42	42	42	42	42	42	42	42	42	42	42	42	42	42	42	42	42	42	42	42	42	42	42	42	42	42	42	42	42	42	42	42	42	0
		9:12	36.9	Non-Exposed	44	44	44	44	44	44	44	44	44	44	44	44	44	44	44	44	44	44	44	44	44	44	44	44	44	44	44	44	44	44	44	44	44	44	44	44	44	44	44	44	44	44
				Exposed	44	44	44	44	44	44	44	44	44	44	44	44	44	44	44	44	44	44	44	44	44	44	44	44	44	44	44	44	44	44	44	44	44	44	44	44	44	44	44	44	44	0
		10:12	39.8	Non-Exposed	46	46	46	46	46	46	46	46	46	46	46	46	46	46	46	46	46	46	46	46	46	46	46	46	46	46	46	46	46	46	46	46	46	46	46	46	46	46	46	46	46	46
				Exposed	46	46	46	46	46	46	46	46	46	46	46	46	46	46	46	46	46	46	46	46	46	46	46	46	46	46	46	46	46	46	46	46	46	46	46	46	46	46	46	46	46	0
		11:12	42.5	Non-Exposed	49	49	49	49	49	49	49	49	49	49	49	49	49	49	49	49	49	49	49	49	49	49	49	49	49	49	49	49	49	49	49	49	49	49	49	49	49	49	49	49	49	49
				Exposed	49	49	49	49	49	49	49	49	49	49	49	49	49	49	49	49	49	49	49	49	49	49	49	49	49	49	49	49	49	49	49	49	49	49	49	49	49	49	49	49	49	0
		12:12	45	Non-Exposed	52	52	52	52	52	52	52	52	52	52	52	52	52	52	52	52	52	52	52	52	52	52	52	52	52	52	52	52	52	52	52	52	52	52	52	52	52	52	52	51	51	51
				Exposed	52	52	52	52	52	52	52	52	52	52	52	52	52	52	52	52	52	52	52	52	52	52	52	52	52	52	52	52	52	52	52	52	52	52	52	52	52	52	52	51	49	0
	D	Flat	0	Non-Exposed	43	43	43	43	43	43	43	43	43	43	43	43	43	43	43	43	43	43	43	43	43	43	43	43	43	43	43	43	43	43	43	43	43	43	43	43	43	43	43	43	43	0
				Exposed	43	43	43	43	43	43	43	43	43	43	43	43	43	43	43	43	43	43	43	43	43	43	43	43	43	43	43	43	43	43	43	43	0	43	43	0	43	43	0	43	0	0
		1:12	4.8	Non-Exposed	40	40	40	40	40	40	40	40	40	40	40	40	40	40	40	40	40	40	40	40	40	40	40	40	40	40	40	40	40	40	40	40	40	40	40	40	40	40	40	40	40	0
				Exposed	40	40	40	40	40	40	40	40	40	40	40	40	40	40	40	40	40	40	40	40	40	40	40	40	40	40	40	40	40	40	40	40	0	40	40	0	40	40	0	40	0	0
		2:12	9.5	Non-Exposed	38	38	38	38	38	38	38	38	38	38	38	38	38	38	38	38	38	38	38	38	38	38	38	38	38	38	38	38	38	38	38	38	38	38	38	38	38	38	0	38	38	0
				Exposed	38	38	38	38	38	38	38	38	38	38	38	38	38	38	38	38	38	38	38	38	38	38	38	38	38	38	38	38	38	38	38	38	0	38	38	0	38	0	0	38	0	0
		3:12	14.0	Non-Exposed	37	36	36	38	36	36	38	36	36	38	36	36	38	36	36	38	36	36	38	36	36	38	36	36	38	36	36	38	36	36	38	36	36	38	36	36	38	36	0	38	36	0
				Exposed	37	36	36	38	36	36	38	36	36	38	36	36	38	36	36	38	36	36	38	36	36	38	36	36	38	36	36	38	36	0	38	0	0	38	0	0	38	0	0	38	0	0
		4:12	18.4	Non-Exposed	37	36	36	38	36	36	38	36	36	38	36	36	38	36	36	38	36	36	38	36	36	38	36	36	38	36	36	38	36	36	38	36	36	38	36	36	38	36	0	38	36	0
				Exposed	37	36	36	38	36	36	38	36	36	38	36	36	38	36	36	38	36	36	38	36	36	38	36	36	38	36	36	38	36	0	38	0	0	38	0	0	38	0	0	38	0	0
		5:12	22.6	Non-Exposed	37	37	37	38	37	37	38	37	37	38	37	37	38	37	37	38	37	37	38	37	37	38	37	37	38	37	37	38	37	37	38	37	37	38	37	37	38	37	37	38	37	37
				Exposed	37	37	37	38	37	37	38	37	37	38	37	37	38	37	37	38	37	37	38	37	37	38	37	37	38	37	37	38	37	37	38	37	0	38	0	0	38	0	0	38	0	0
		6:12	26.6	Non-Exposed	38	38	38	38	38	38	38	38	38	38	38	38	38	38	38	38	38	38	38	38	38	38	38	38	38	38	38	38	38	38	38	38	38	38	38	38	38	38	38	38	38	38
				Exposed	38	38	38	38	38	38	38	38	38	38	38	38	38	38	38	38	38	38	38	38	38	38	38	38	38	38	38	38	38	38	38	38	0	38	38	0	38	0	0	38	0	0
		7:12	30.3	Non-Exposed	40	40	40	40	40	40	40	40	40	40	40	40	40	40	40	40	40	40	40	40	40	40	40	40	40	40	40	40	40	40	40	40	40	40	40	40	40	40	40	40	40	40
				Exposed	40	40	40	40	40	40	40	40	40	40	40	40	40	40	40	40	40	40	40	40	40	40	40	40	40	40	40	40	40	40	40	40	40	40	40	40	40	40	0	40	40	0
		8:12	33.7	Non-Exposed	42	42	42	42	42	42	42	42	42	42	42	42	42	42	42	42	42	42	42	42	42	42	42	42	42	42	42	42	42	42	42	42	42	42	42	42	42	42	42	42	42	42
				Exposed	42	42	42	42	42	42	42	42	42	42	42	42	42	42	42	42	42	42	42	42	42	42	42	42	42	42	42	42	42	42	42	42	42	42	42	42	42	42	0	42	42	0
		9:12	36.9	Non-Exposed	44	44	44	44	44	44	44	44	44	44	44	44	44	44	44	44	44	44	44	44	44	44	44	44	44	44	44	44	44	44	44	44	44	44	44	44	44	44	44	44	44	44
				Exposed	44	44	44	44	44	44	44	44	44	44	44	44	44	44	44	44	44	44	44	44	44	44	44	44	44	44	44	44	44	44	44	44	44	44	44	44	44	44	0	44	44	0
		10:12	39.8	Non-Exposed	46	46	46	46	46	46	46	46	46	46	46	46	46	46	46	46	46	46	46	46	46	46	46	46	46	46	46	46	46	46	46	46	46	46	46	46	46	46	46	46	46	46
				Exposed	46	46	46	46	46	46	46	46	46	46	46	46	46	46	46	46	46	46	46	46	46	46	46	46	46	46	46	46	46	46	46	46	46	46	46	46	46	46	0	46	45	0
		11:12	42.5	Non-Exposed	49	49	49	49	49	49	49	49	49	49	49	49	49	49	49	49	49	49	49	49	49	49	49	49	49	49	49	49	49	49	49	49	49	49	49	49	49	49	48	48	48	48
				Exposed	49	49	49	49	49	49	49	49	49	49	49	49	49	49	49	49	49	49	49	49	49	49	49	49	49	49	49	49	49	49	49	49	49	49	49	49	49	49	48	47	0	47
		12:12	45	Non-Exposed	52	52	52	52	52	52	52	52	52	52	52	52	52	52	52	52	52	52	52	52	52	52	52	52	52	52	52	52	52	52	52	52	52	52	52	51	51	51	50	50	50	50
				Exposed	52	52	52	52	52	52	52	52	52	52	52	52	52	52	52	52	52	52	52	52	52	52	52	52	52	52	52	52	52	52	52	52	52	52	52	51	50	51	50	47	0	47

Tamarack 2.3 Rail – Hip Flush-Mount on 30 Foot Maximum Mean Roof Height – Landscape – Panel Width = 40 Inches or Less

Ground Snow Load	Exposure Category	Roof Pitch	Roof Angle	Wind Speed (mph)	95			100			105			110			115			120			125			130			140			150			160			170			180			190		
				Roof Area	1	2	3	1	2	3	1	2	3	1	2	3	1	2	3	1	2	3	1	2	3	1	2	3	1	2	3	1	2	3	1	2	3	1	2	3	1	2	3	1	2	3
0	B	2:12	9.5	Non-Exposed	96	96	96	96	96	96	96	96	96	96	96	96	96	96	96	96	96	96	96	96	96	96	96	96	96	95	90	96	87	83	93	80	76	87	74	71	82	70	67	77	66	63
				Exposed	96	96	96	96	96	96	96	96	96	96	96	95	96	94	89	96	89	85	96	85	81	94	81	77	86	74	70	80	68	65	74	64	61	69	60	58	65	56	54	62	53	51
		3:12	14.0	Non-Exposed	96	96	96	96	96	96	96	96	96	96	96	96	96	96	96	96	96	96	96	96	96	96	96	96	96	94	90	96	86	82	93	80	76	87	74	71	81	69	67	77	66	63
				Exposed	96	96	96	96	96	96	96	96	96	96	96	94	96	94	89	96	89	84	96	84	80	94	80	76	86	73	70	80	68	65	74	64	61	69	60	57	65	56	54	62	53	51
		4:12	18.4	Non-Exposed	96	96	96	96	96	96	96	96	96	96	96	96	96	96	96	96	96	96	96	96	96	96	96	96	96	94	89	96	86	82	93	80	76	86	74	70	81	69	66	76	66	63
				Exposed	96	96	96	96	96	96	96	96	96	96	96	94	96	93	89	96	88	84	96	84	80	93	80	76	86	73	70	79	68	65	74	63	61	69	60	57	65	56	54	62	53	51
		5:12	22.6	Non-Exposed	96	96		96	96		96	96		96	96		96	96		96	96		96	96		96	96		96	96		96	96		96	89		96	82		96	77		90	72	
				Exposed	96	96		96	96		96	96		96	96		96	96		96	96		96	94		96	89		96	81		94	75		86	70		80	65		75	62		70	58	
		6:12	26.6	Non-Exposed	96	96		96	96		96	96		96	96		96	96		96	96		96	96		96	96		96	96		96	96		96	88		96	82		95	76		89	72	
				Exposed	96	96		96	96		96	96		96	96		96	96		96	96		96	93		96	89		96	81		93	75		86	69		80	65		74	62		70	58	
		7:12	30.3	Non-Exposed	96	96	96	96	96	96	96	96	96	96	96	96	96	96	96	96	96	96	96	96	96	96	96	96	96	90	87	96	83	78	96	76	72	96	70	66	91	66	62	85	62	58
				Exposed	96	96	96	96	96	96	96	96	96	96	95	91	96	90	86	96	85	81	96	81	76	96	77	72	96	70	66	89	64	60	82	60	56	76	56	52	71	52	48	67	49	45
		8:12	33.7	Non-Exposed	96	96	96	96	96	96	96	96	96	96	96	96	96	96	96	96	96	96	96	96	96	96	96	96	96	90	86	96	82	78	96	76	71	96	70	66	91	66	62	85	62	58
				Exposed	96	96	96	96	96	96	96	96	96	96	95	91	96	89	85	96	85	80	96	80	76	96	76	72	96	70	65	88	64	60	82	60	56	76	56	52	71	52	48	67	49	45
		9:12	36.9	Non-Exposed	96	96	96	96	96	96	96	96	96	96	96	96	96	96	96	96	96	96	96	96	96	96	96	95	96	90	86	96	82	78	96	76	71	96	70	66	90	66	62	85	62	58
				Exposed	96	96	96	96	96	96	96	96	96	96	94	91	96	89	85	96	84	80	96	80	76	96	76	72	96	69	65	88	64	60	81	60	55	76	56	51	71	52	48	67	49	45
		10:12	39.8	Non-Exposed	96	96	96	96	96	96	96	96	96	96	96	96	96	96	96	96	96	96	96	96	96	96	96	95	96	89	85	96	82	78	96	75	71	96	70	66	90	66	61	84	62	57
				Exposed	96	96	96	96	96	96	96	96	96	96	94	90	96	89	85	96	84	80	96	80	75	96	76	71	95	69	65	88	64	60	81	60	55	76	56	51	71	52	48	67	49	45
		11:12	42.5	Non-Exposed	96	96	96	96	96	96	96	96	96	96	96	96	96	96	96	96	96	96	96	96	96	96	96	95	96	89	85	96	82	77	96	75	71	96	70	66	90	65	61	84	62	57
				Exposed	96	96	96	96	96	96	96	96	96	96	93	90	96	88	84	96	84	80	96	80	75	96	76	71	95	69	65	87	64	60	81	59	55	75	55	51	71	52	48	67	49	45
		12:12	45	Non-Exposed	96	96	96	96	96	96	96	96	96	96	96	96	96	96	96	96	96	96	96	96	96	96	96	94	96	89	85	96	81	77	96	75	71	96	70	66	89	65	61	84	61	57
				Exposed	96	96	96	96	96	96	96	96	96	96	93	90	96	88	84	96	84	79	96	79	75	96	76	71	95	69	65	87	64	60	81	59	55	75	55	51	70	52	48	67	49	45
	C	2:12	9.5	Non-Exposed	96	96	96	96	96	96	96	96	96	96	96	96	96	96	93	96	93	88	96	88	84	96	84	80	90	77	73	83	71	68	77	66	63	72	62	60	68	58	56	64	55	53
				Exposed	96	96	92	96	91	86	96	85	81	94	80	77	89	76	72	85	72	69	81	69	66	77	66	64	71	61	59	66	57	55	62	54	51	58	50	48	55	48	46	52	45	0
		3:12	14.0	Non-Exposed	96	96	96	96	96	96	96	96	96	96	96	96	96	96	93	96	93	88	96	88	84	96	84	80	89	76	73	83	70	68	77	66	63	72	62	59	68	58	56	64	55	53
				Exposed	96	96	91	96	90	86	96	85	81	93	80	76	89	76	72	85	72	69	81	69	66	77	66	64	71	61	59	66	57	55	62	54	51	58	50	48	55	47	46	52	45	0
		4:12	18.4	Non-Exposed	96	96	96	96	96	96	96	96	96	96	96	96	96	96	92	96	92	88	96	88	83	96	83	79	89	76	72	82	70	67	77	66	63	72	62	59	67	58	56	64	55	53
				Exposed	96	96	91	96	90	85	96	84	80	93	80	76	88	76	72	84	72	69	80	69	66	77	66	63	71	61	59	66	57	55	62	53	51	58	50	48	55	47	46	52	45	0
		5:12	22.6	Non-Exposed	96	96		96	96		96	96		96	96		96	96		96	96		96	96		96	93		96	85		96	78		90	72		83	68		78	64		73	60	
				Exposed	96	96		96	96		96	94		96	89		96	84		96	80		95	76		91	73		83	67		76	63		70	59		66	55		62	52		59	49	
		6:12	26.6	Non-Exposed	96	96		96	96		96	96		96	96		96	96		96	96		96	96		96	93		96	85		96	78		90	72		83	67		77	64		72	60	
				Exposed	96	96		96	96		96	94		96	89		96	84		96	80		95	76		90	72		82	67		76	62		70	58		66	55		62	52		59	49	
		7:12	30.3	Non-Exposed	96	96	96	96	96	96	96	96	96	96	96	96	96	94	90	96	89	85	96	84	80	96	80	76	96	73	68	92	67	63	85	62	58	79	58	54	74	54	50	70	51	47
				Exposed	96	92	89	96	86	82	96	81	77	96	76	72	96	72	68	95	69	64	90	65	61	86	63	58	78	57	53	72	53	49	67	49	45	63	46	42	60	44	0	57	0	0
		8:12	33.7	Non-Exposed	96	96	96	96	96	96	96	96	96	96	96	96	96	93	90	96	88	84	96	84	80	96	80	75	96	72	68	92	67	63	85	62	58	79	58	54	74	54	50	69	51	47
				Exposed	96	92	88	96	86	82	96	81	76	96	76	72	96	72	68	94	68	64	90	65	61	86	62	58	78	57	53	72	53	49	67	49	45	63	46	42	60	44	0	57	0	0
		9:12	36.9	Non-Exposed	96	96	96	96	96	96	96	96	96	96	96	95	96	93	89	96	88	84	96	84	79	96	79	75	96	72	68	92	67	63	85	62	58	79	58	54	74	54	50	69	51	47
				Exposed	96	92	88	96	86	82	96	81	76	96	76	71	96	72	68	94	68	64	89	65	61	85	62	58	78	57	53	72	53	49	67	49	45	63	46	42	60	44	0	57	0	0
		10:12	39.8	Non-Exposed	96	96	96	96	96	96	96	96	96	96	96	95	96	93	89	96	88	84	96	83	79	96	79	75	96	72	68	91	67	62	85	62	58	79	58	54	73	54	50	69	51	47
				Exposed	96	91	87	96	85	81	96	80	76	96	76	71	96	72	67	94	68	64	89	65	61	85	62	58	78	57	53	72	53	49	67	49	45	63	46	42	60	44	0	57	0	0
		11:12	42.5	Non-Exposed	96	96	96	96	96	96	96	96	96	96	96	94	96	92	89	96	87	83	96	83	79	96	79	75	96	72	68	91	66	62	84	62	58	78	58	54	73	54	50	69	51	47
				Exposed	96	91	87	96	85	81	96	80	76	96	76	71	96	71	67	93	68	64	89	65	61	85	62	58	78	57	53	72	53	49	67	49	45	63	46	42	60	44	0	56	0	0
		12:12	45	Non-Exposed	96	96	96	96	96	96	96	96	96	96	96	94	96	92	88	96	87	83	96	83	79	96	79	75	96	72	68	91	66	62	84	62	58	78	58	53	73	54	50	69	51	47
				Exposed	96	91	87	96	85	81	96	80	76	96	75	71	96	71	67	93	68	64	89	65	61	85	62	58	77	57	53	71	53	49	67	49	45	63	46	42	60	44	0	56	0	0
	D	2:12	9.5	Non-Exposed	96	96	96	96	96	96	96	96	94	96	93	89	96	88	84	96	84	80	93	80	76	89	76	72	82	69	67	75	65	62	70	61	58	66	57	55	62	54	52	59	51	49
				Exposed	96	87	83	95	82	78	90	77	73	85	72	69	81	69	66	77	66	63	74	63	61	71	61	58	65	56	54	61	53	50	57	49	47	54	46	44	51	0	0	48	0	0
		3:12	14.0	Non-Exposed	96	96	96	96	96	96	96	96	94	96	93	88	96	88	84	96	83	79	92	79	75	88	75	72	81	69	66	75	65	62	70	60	58	66	57	55	62	54	51	59	51	49
				Exposed	96	87	82	95	81	77	89	76	73	85	72	69	81	69	66	77	66	63	73	63	61	70	61	58	65	56	54	61	52	50	57	49	47	53	46	44	50	0	0	48	0	0
		4:12	18.4	Non-Exposed	96	96	96	96	96	96	96	96	93	96	92	88	96	87	83	96	83	79	92	79	75	88	75	72	81	69	66	75	64	62	70	60	58	66	57	54	62	54	51	59	51	49
				Exposed	96	86	82	94	81	77	89	76	73	84	72	69	80	69	66	77	66	63	73	63	61	70	61	58	65	56	54	61	52	50	57	49	47	53	46	0	50	0	0	48	0	0
		5:12	22.6	Non-Exposed	96	96		96	96		96	96		96	96		96	96		96	93		96	88		96	84		96	77		88	71		81	66		75	62		70	59		66	55	
				Exposed	96	96		96	90		96	85		96	80		95	76		90	72		86	69		82	66		74	62		69	57		64	54		61	51		57	48		54	45	
		6:12	26.6	Non-Exposed	96	96		96	96		96	96		96	96		96	96		96	92		96	88		96	84		95	76		87	70		81	66		75	62		70	59		66	55	
				Exposed	96	96		96	90		96	85		96	80		95	76		90	72		85	69		81	66		74	61		69	57		64	54		60	50		57	48		54	45	
		7:12	30.3	Non-Exposed	96	96	96	96	96	96	96	95	91	96	89	85	96	84	80	96	80	75	96	75	71	96	72	68	91	66	62	83	61	57	77	56	52	72	53	49	68	49	45	64	47	42
				Exposed	96	83	78	96	77	73	96	73	68	95	69	65	90	65	61	86	62	58	81	59	55	78	57	53	71	52	48	66	48	44	62	45	41	58	43	0	55	0	0	52	0	0
		8:12	33.7	Non-Exposed	96	96	96	96	96	96	96	94	91	96	89	85	96	84	80	96	79	75	96	75	71	96	72	67	90	66	61	83	61	56	77	56	52	71	53	48	67	49	45	64	47	42
				Exposed	96	82	78	96	77	73	96	73	68	95	69	64	90	65	61	85	62	58	81	59	55	77	57	52	71	52	48	66	48	44	62	45	41	58	43	0	55	0	0	52	0	0
		9:12	36.9	Non-Exposed	96	96	96	96	96	96	96	94	90	96	88	84	96	83	79	96	79	75	96	75	71	96	71	67	90	66	61	83	61	56	77	56	52	71	52	48	67	49	45	64	47	42
				Exposed	96	82	78	96	77	73	96	72	68	94	69	64	89	65	61	85	62	58	81	59	55	77	57	52	71	52	48	66	48	44	62	45	41	58	42	0	55	0	0	52	0	0
		10:12	39.8	Non-Exposed	96	96	96	96	96	96	96	93	90	96	88	84	96	83	79	96	79	74	96	75	70	96	71	67	90	65	61	83	60	56	76	56	52	71	52	48	67	49	45	64	47	42
				Exposed	96	82	78	96	77	72	96	72	68	94	68	64	89	65	61	85	62	58	81	59	55	77	57	52	71	52	48	66	48	44	62	45	41	58	42	0	55	0	0	52	0	0
		11:12	42.5	Non-Exposed	96	96	96	96	96	96	96	93	89	96	88	84	96	83	79	96	79	74	96	75	70	96	71	67	89	65	61	82	60	56	76	56	52	71	52	48	67	49	45	64	47	42
				Exposed	96	82	78	96	77	72	96	72	68	94	68	64	89	65	61	84	62	58	80	59	55	77	56	52	70	52	48	66	48	44	62	45	41	58	42	0	55	0	0	52	0	0
		12:12	45	Non-Exposed	96	96	96	96	96	95	96	93	89	96	87	84	96	83	79	96	78	74	96	75	70	96	71	67	89	65	61	82	60	56	76	56	52	71	52	48	67	49	45	64	46	42
				Exposed	96	82	77	96	76	72	96	72	68	93	68	64	89	65	61	84	62	58	80	59	55	77	56	52	70	52	48	66	48	44	62	45	41	58	42	0	55	0	0	52	0	0

Tamarack 2.3 Rail – Hip Flush-Mount on 30 Foot Maximum Mean Roof Height – Landscape – Panel Width = 40 Inches or Less

Ground Snow Load	Exposure Category	Roof Pitch	Roof Angle	Wind Speed (mph)	95			100			105			110			115			120			125			130			140			150			160			170			180			190		
				Roof Area	1	2	3	1	2	3	1	2	3	1	2	3	1	2	3	1	2	3	1	2	3	1	2	3	1	2	3	1	2	3	1	2	3	1	2	3	1	2	3	1	2	3
5	B	2:12	9.5	Non-Exposed	96	96	96	96	96	96	96	96	96	96	96	96	96	96	96	96	96	96	96	96	96	96	96	96	96	95	90	96	87	83	93	80	76	87	74	71	82	70	67	77	66	63
				Exposed	96	96	96	96	96	96	96	96	96	96	96	95	96	94	89	96	89	85	96	85	81	94	81	77	86	74	70	80	68	65	74	64	61	69	60	58	65	56	54	62	53	51
		3:12	14.0	Non-Exposed	96	96	96	96	96	96	96	96	96	96	96	96	96	96	96	96	96	96	96	96	96	96	96	96	96	94	90	96	86	82	93	80	76	87	74	71	81	69	67	77	66	63
				Exposed	96	96	96	96	96	96	96	96	96	96	96	94	96	94	89	96	89	84	96	84	80	94	80	76	86	73	70	80	68	65	74	64	61	69	60	57	65	56	54	62	53	51
		4:12	18.4	Non-Exposed	96	96	96	96	96	96	96	96	96	96	96	96	96	96	96	96	96	96	96	96	96	96	96	96	96	94	89	96	86	82	93	80	76	86	74	70	81	69	66	76	66	63
				Exposed	96	96	96	96	96	96	96	96	96	96	96	94	96	93	89	96	88	84	96	84	80	93	80	76	86	73	70	79	68	65	74	63	61	69	60	57	65	56	54	62	53	51
		5:12	22.6	Non-Exposed	96	96		96	96		96	96		96	96		96	96		96	96		96	96		96	96		96	96		96	96		96	89		96	82		96	77		90	72	
				Exposed	96	96		96	96		96	96		96	96		96	96		96	96		96	94		96	89		96	81		94	75		86	70		80	65		75	62		70	58	
		6:12	26.6	Non-Exposed	96	96		96	96		96	96		96	96		96	96		96	96		96	96		96	96		96	96		96	96		96	88		96	82		95	76		89	72	
				Exposed	96	96		96	96		96	96		96	96		96	96		96	96		96	93		96	89		96	81		93	75		86	69		80	65		74	62		70	58	
		7:12	30.3	Non-Exposed	96	96	96	96	96	96	96	96	96	96	96	96	96	96	96	96	96	96	96	96	96	96	96	96	96	90	87	96	83	78	96	76	72	96	70	66	91	66	62	85	62	58
				Exposed	96	96	96	96	96	96	96	96	96	96	95	91	96	90	86	96	85	81	96	81	76	96	77	72	96	70	66	89	64	60	82	60	56	76	56	52	71	52	48	67	49	45
		8:12	33.7	Non-Exposed	96	96	96	96	96	96	96	96	96	96	96	96	96	96	96	96	96	96	96	96	96	96	96	96	96	90	86	96	82	78	96	76	71	96	70	66	91	66	62	85	62	58
				Exposed	96	96	96	96	96	96	96	96	96	96	95	91	96	89	85	96	85	80	96	80	76	96	76	72	96	70	65	88	64	60	82	60	56	76	56	52	71	52	48	67	49	45
		9:12	36.9	Non-Exposed	96	96	96	96	96	96	96	96	96	96	96	96	96	96	96	96	96	96	96	96	96	96	96	95	96	90	86	96	82	78	96	76	71	96	70	66	90	66	62	85	62	58
				Exposed	96	96	96	96	96	96	96	96	96	96	94	91	96	89	85	96	84	80	96	80	76	96	76	72	96	69	65	88	64	60	81	60	55	76	56	51	71	52	48	67	49	45
		10:12	39.8	Non-Exposed	96	96	96	96	96	96	96	96	96	96	96	96	96	96	96	96	96	96	96	96	96	96	96	95	96	89	85	96	82	78	96	75	71	96	70	66	90	66	61	84	62	57
				Exposed	96	96	96	96	96	96	96	96	96	96	94	90	96	89	85	96	84	80	96	80	75	96	76	71	95	69	65	88	64	60	81	60	55	76	56	51	71	52	48	67	49	45
		11:12	42.5	Non-Exposed	96	96	96	96	96	96	96	96	96	96	96	96	96	96	96	96	96	96	96	96	96	96	96	95	96	89	85	96	82	77	96	75	71	96	70	66	90	65	61	84	62	57
				Exposed	96	96	96	96	96	96	96	96	96	96	93	90	96	88	84	96	84	80	96	80	75	96	76	71	95	69	65	87	64	60	81	59	55	75	55	51	71	52	48	67	49	45
		12:12	45	Non-Exposed	96	96	96	96	96	96	96	96	96	96	96	96	96	96	96	96	96	96	96	96	96	96	96	94	96	89	85	96	81	77	96	75	71	96	70	66	89	65	61	84	61	57
				Exposed	96	96	96	96	96	96	96	96	96	96	93	90	96	88	84	96	84	79	96	79	75	96	76	71	95	69	65	87	64	60	81	59	55	75	55	51	70	52	48	67	49	45
	C	2:12	9.5	Non-Exposed	96	96	96	96	96	96	96	96	96	96	96	96	96	96	93	96	93	88	96	88	84	96	84	80	90	77	73	83	71	68	77	66	63	72	62	60	68	58	56	64	55	53
				Exposed	96	96	92	96	91	86	96	85	81	94	80	77	89	76	72	85	72	69	81	69	66	77	66	64	71	61	59	66	57	55	62	54	51	58	50	48	55	48	46	52	45	0
		3:12	14.0	Non-Exposed	96	96	96	96	96	96	96	96	96	96	96	96	96	96	93	96	93	88	96	88	84	96	84	80	89	76	73	83	70	68	77	66	63	72	62	59	68	58	56	64	55	53
				Exposed	96	96	91	96	90	86	96	85	81	93	80	76	89	76	72	85	72	69	81	69	66	77	66	64	71	61	59	66	57	55	62	54	51	58	50	48	55	47	46	52	45	0
		4:12	18.4	Non-Exposed	96	96	96	96	96	96	96	96	96	96	96	96	96	96	92	96	92	88	96	88	83	96	83	79	89	76	72	82	70	67	77	66	63	72	62	59	67	58	56	64	55	53
				Exposed	96	96	91	96	90	85	96	84	80	93	80	76	88	76	72	84	72	69	80	69	66	77	66	63	71	61	59	66	57	55	62	53	51	58	50	48	55	47	46	52	45	0
		5:12	22.6	Non-Exposed	96	96		96	96		96	96		96	96		96	96		96	96		96	96		96	93		96	85		96	78		90	72		83	68		78	64		73	60	
				Exposed	96	96		96	96		96	94		96	89		96	84		96	80		95	76		91	73		83	67		76	63		70	59		66	55		62	52		59	49	
		6:12	26.6	Non-Exposed	96	96		96	96		96	96		96	96		96	96		96	96		96	96		96	93		96	85		96	78		90	72		83	67		77	64		72	60	
				Exposed	96	96		96	96		96	94		96	89		96	84		96	80		95	76		90	72		82	67		76	62		70	58		66	55		62	52		59	49	
		7:12	30.3	Non-Exposed	96	96	96	96	96	96	96	96	96	96	96	96	96	94	90	96	89	85	96	84	80	96	80	76	96	73	68	92	67	63	85	62	58	79	58	54	74	54	50	70	51	47
				Exposed	96	92	89	96	86	82	96	81	77	96	76	72	96	72	68	95	69	64	90	65	61	86	63	58	78	57	53	72	53	49	67	49	45	63	46	42	60	44	0	57	0	0
		8:12	33.7	Non-Exposed	96	96	96	96	96	96	96	96	96	96	96	96	96	93	90	96	88	84	96	84	80	96	80	75	96	72	68	92	67	63	85	62	58	79	58	54	74	54	50	69	51	47
				Exposed	96	92	88	96	86	82	96	81	76	96	76	72	96	72	68	94	68	64	90	65	61	86	62	58	78	57	53	72	53	49	67	49	45	63	46	42	60	44	0	57	0	0
		9:12	36.9	Non-Exposed	96	96	96	96	96	96	96	96	96	96	96	95	96	93	89	96	88	84	96	84	79	96	79	75	96	72	68	92	67	63	85	62	58	79	58	54	74	54	50	69	51	47
				Exposed	96	92	88	96	86	82	96	81	76	96	76	71	96	72	68	94	68	64	89	65	61	85	62	58	78	57	53	72	53	49	67	49	45	63	46	42	60	44	0	57	0	0
		10:12	39.8	Non-Exposed	96	96	96	96	96	96	96	96	96	96	96	95	96	93	89	96	88	84	96	83	79	96	79	75	96	72	68	91	67	62	85	62	58	79	58	54	73	54	50	69	51	47
				Exposed	96	91	87	96	85	81	96	80	76	96	76	71	96	72	67	94	68	64	89	65	61	85	62	58	78	57	53	72	53	49	67	49	45	63	46	42	60	44	0	57	0	0
		11:12	42.5	Non-Exposed	96	96	96	96	96	96	96	96	96	96	96	94	96	92	89	96	87	83	96	83	79	96	79	75	96	72	68	91	66	62	84	62	58	78	58	54	73	54	50	69	51	47
				Exposed	96	91	87	96	85	81	96	80	76	96	76	71	96	71	67	93	68	64	89	65	61	85	62	58	78	57	53	72	53	49	67	49	45	63	46	42	60	44	0	56	0	0
		12:12	45	Non-Exposed	96	96	96	96	96	96	96	96	96	96	96	94	96	92	88	96	87	83	96	83	79	96	79	75	96	72	68	91	66	62	84	62	58	78	58	53	73	54	50	69	51	47
				Exposed	96	91	87	96	85	81	96	80	76	96	75	71	96	71	67	93	68	64	89	65	61	85	62	58	77	57	53	71	53	49	67	49	45	63	46	42	60	44	0	56	0	0
	D	2:12	9.5	Non-Exposed	96	96	96	96	96	96	96	96	94	96	93	89	96	88	84	96	84	80	93	80	76	89	76	72	82	69	67	75	65	62	70	61	58	66	57	55	62	54	52	59	51	49
				Exposed	96	87	83	95	82	78	90	77	73	85	72	69	81	69	66	77	66	63	74	63	61	71	61	58	65	56	54	61	53	50	57	49	47	54	46	44	51	0	0	48	0	0
		3:12	14.0	Non-Exposed	96	96	96	96	96	96	96	96	94	96	93	88	96	88	84	96	83	79	92	79	75	88	75	72	81	69	66	75	65	62	70	60	58	66	57	55	62	54	51	59	51	49
				Exposed	96	87	82	95	81	77	89	76	73	85	72	69	81	69	66	77	66	63	73	63	61	70	61	58	65	56	54	61	52	50	57	49	47	53	46	44	50	0	0	48	0	0
		4:12	18.4	Non-Exposed	96	96	96	96	96	96	96	96	93	96	92	88	96	87	83	96	83	79	92	79	75	88	75	72	81	69	66	75	64	62	70	60	58	66	57	54	62	54	51	59	51	49
				Exposed	96	86	82	94	81	77	89	76	73	84	72	69	80	69	66	77	66	63	73	63	61	70	61	58	65	56	54	61	52	50	57	49	47	53	46	0	50	0	0	48	0	0
		5:12	22.6	Non-Exposed	96	96		96	96		96	96		96	96		96	96		96	93		96	88		96	84		96	77		88	71		81	66		75	62		70	59		66	55	
				Exposed	96	96		96	90		96	85		96	80		95	76		90	72		86	69		82	66		74	62		69	57		64	54		61	51		57	48		54	45	
		6:12	26.6	Non-Exposed	96	96		96	96		96	96		96	96		96	96		96	92		96	88		96	84		95	76		87	70		81	66		75	62		70	59		66	55	
				Exposed	96	96		96	90		96	85		96	80		95	76		90	72		85	69		81	66		74	61		69	57		64	54		60	50		57	48		54	45	
		7:12	30.3	Non-Exposed	96	96	96	96	96	96	96	95	91	96	89	85	96	84	80	96	80	75	96	75	71	96	72	68	91	66	62	83	61	57	77	56	52	72	53	49	68	49	45	64	47	42
				Exposed	96	83	78	96	77	73	96	73	68	95	69	65	90	65	61	86	62	58	81	59	55	78	57	53	71	52	48	66	48	44	62	45	41	58	43	0	55	0	0	52	0	0
		8:12	33.7	Non-Exposed	96	96	96	96	96	96	96	94	91	96	89	85	96	84	80	96	79	75	96	75	71	96	72	67	90	66	61	83	61	56	77	56	52	71	53	48	67	49	45	64	47	42
				Exposed	96	82	78	96	77	73	96	73	68	95	69	64	90	65	61	85	62	58	81	59	55	77	57	52	71	52	48	66	48	44	62	45	41	58	43	0	55	0	0	52	0	0
		9:12	36.9	Non-Exposed	96	96	96	96	96	96	96	94	90	96	88	84	96	83	79	96	79	75	96	75	71	96	71	67	90	66	61	83	61	56	77	56	52	71	52	48	67	49	45	64	47	42
				Exposed	96	82	78	96	77	73	96	72	68	94	69	64	89	65	61	85	62	58	81	59	55	77	57	52	71	52	48	66	48	44	62	45	41	58	42	0	55	0	0	52	0	0
		10:12	39.8	Non-Exposed	96	96	96	96	96	96	96	93	90	96	88	84	96	83	79	96	79	74	96	75	70	96	71	67	90	65	61	83	60	56	76	56	52	71	52	48	67	49	45	64	47	42
				Exposed	96	82	78	96	77	72	96	72	68	94	68	64	89	65	61	85	62	58	81	59	55	77	57	52	71	52	48	66	48	44	62	45	41	58	42	0	55	0	0	52	0	0
		11:12	42.5	Non-Exposed	96	96	96	96	96	96	96	93	89	96	88	84	96	83	79	96	79	74	96	75	70	96	71	67	89	65	61	82	60	56	76	56	52	71	52	48	67	49	45	64	47	42
				Exposed	96	82	78	96	77	72	96	72	68	94	68	64	89	65	61	84	62	58	80	59	55	77	56	52	70	52	48	66	48	44	62	45	41	58	42	0	55	0	0	52	0	0
		12:12	45	Non-Exposed	96	96	96	96	96	95	96	93	89	96	87	84	96	83	79	96	78	74	96	75	70	96	71	67	89	65	61	82	60	56	76	56	52	71	52	48	67	49	45	64	46	42
				Exposed	96	82	77	96	76	72	96	72	68	93	68	64	89	65	61	84	62	58	80	59	55	77	56	52	70	52	48	66	48	44	62	45	41	58	42	0	55	0	0	52	0	0

Tamarack 2.3 Rail – Hip Flush-Mount on 30 Foot Maximum Mean Roof Height – Landscape – Panel Width = 40 Inches or Less

Ground Snow Load	Exposure Category	Roof Pitch	Roof Angle	Wind Speed (mph)	95			100			105			110			115			120			125			130			140			150			160			170			180			190		
				Roof Area	1	2	3	1	2	3	1	2	3	1	2	3	1	2	3	1	2	3	1	2	3	1	2	3	1	2	3	1	2	3	1	2	3	1	2	3	1	2	3	1	2	3
10	B	2:12	9.5	Non-Exposed	96	96	96	96	96	96	96	96	96	96	96	96	96	96	96	96	96	96	96	96	96	96	96	96	96	95	90	96	87	83	93	80	76	87	74	71	82	70	67	77	66	63
				Exposed	96	96	96	96	96	96	96	96	96	96	96	95	96	94	89	96	89	85	96	85	81	94	81	77	86	74	70	80	68	65	74	64	61	69	60	58	65	56	54	62	53	51
		3:12	14.0	Non-Exposed	96	96	96	96	96	96	96	96	96	96	96	96	96	96	96	96	96	96	96	96	96	96	96	96	96	94	90	96	86	82	93	80	76	87	74	71	81	69	67	77	66	63
				Exposed	96	96	96	96	96	96	96	96	96	96	96	94	96	94	89	96	89	84	96	84	80	94	80	76	86	73	70	80	68	65	74	64	61	69	60	57	65	56	54	62	53	51
		4:12	18.4	Non-Exposed	96	96	96	96	96	96	96	96	96	96	96	96	96	96	96	96	96	96	96	96	96	96	96	96	96	94	89	96	86	82	93	80	76	86	74	70	81	69	66	76	66	63
				Exposed	96	96	96	96	96	96	96	96	96	96	96	94	96	93	89	96	88	84	96	84	80	93	80	76	86	73	70	79	68	65	74	63	61	69	60	57	65	56	54	62	53	51
		5:12	22.6	Non-Exposed	96	96		96	96		96	96		96	96		96	96		96	96		96	96		96	96		96	96		96	96		96	89		96	82		96	77		90	72	
				Exposed	96	96		96	96		96	96		96	96		96	96		96	96		96	94		96	89		96	81		94	75		86	70		80	65		75	62		70	58	
		6:12	26.6	Non-Exposed	96	96		96	96		96	96		96	96		96	96		96	96		96	96		96	96		96	96		96	96		96	88		96	82		95	76		89	72	
				Exposed	96	96		96	96		96	96		96	96		96	96		96	96		96	93		96	89		96	81		93	75		86	69		80	65		74	62		70	58	
		7:12	30.3	Non-Exposed	96	96	96	96	96	96	96	96	96	96	96	96	96	96	96	96	96	96	96	96	96	96	96	96	96	90	87	96	83	78	96	76	72	96	70	66	91	66	62	85	62	58
				Exposed	96	96	96	96	96	96	96	96	96	96	95	91	96	90	86	96	85	81	96	81	76	96	77	72	96	70	66	89	64	60	82	60	56	76	56	52	71	52	48	67	49	45
		8:12	33.7	Non-Exposed	96	96	96	96	96	96	96	96	96	96	96	96	96	96	96	96	96	96	96	96	96	96	96	96	96	90	86	96	82	78	96	76	71	96	70	66	91	66	62	85	62	58
				Exposed	96	96	96	96	96	96	96	96	96	96	95	91	96	89	85	96	85	80	96	80	76	96	76	72	96	70	65	88	64	60	82	60	56	76	56	52	71	52	48	67	49	45
		9:12	36.9	Non-Exposed	96	96	96	96	96	96	96	96	96	96	96	96	96	96	96	96	96	96	96	96	96	96	96	95	96	90	86	96	82	78	96	76	71	96	70	66	90	66	62	85	62	58
				Exposed	96	96	96	96	96	96	96	96	96	96	94	91	96	89	85	96	84	80	96	80	76	96	76	72	96	69	65	88	64	60	81	60	55	76	56	51	71	52	48	67	49	45
		10:12	39.8	Non-Exposed	96	96	96	96	96	96	96	96	96	96	96	96	96	96	96	96	96	96	96	96	96	96	96	95	96	89	85	96	82	78	96	75	71	96	70	66	90	66	61	84	62	57
				Exposed	96	96	96	96	96	96	96	96	96	96	94	90	96	89	85	96	84	80	96	80	75	96	76	71	95	69	65	88	64	60	81	60	55	76	56	51	71	52	48	67	49	45
		11:12	42.5	Non-Exposed	96	96	96	96	96	96	96	96	96	96	96	96	96	96	96	96	96	96	96	96	96	96	96	95	96	89	85	96	82	77	96	75	71	96	70	66	90	65	61	84	62	57
				Exposed	96	96	96	96	96	96	96	96	96	96	93	90	96	88	84	96	84	80	96	80	75	96	76	71	95	69	65	87	64	60	81	59	55	75	55	51	71	52	48	67	49	45
		12:12	45	Non-Exposed	96	96	96	96	96	96	96	96	96	96	96	96	96	96	96	96	96	96	96	96	94	96	89	85	96	81	77	96	75	71	96	70	66	89	65	61	84	61	57
				Exposed	96	96	96	96	96	96	96	96	96	96	93	90	96	88	84	96	84	79	96	79	75	96	76	71	95	69	65	87	64	60	81	59	55	75	55	51	70	52	48	67	49	45
	C	2:12	9.5	Non-Exposed	96	96	96	96	96	96	96	96	96	96	96	96	96	96	93	96	93	88	96	88	84	96	84	80	90	77	73	83	71	68	77	66	63	72	62	60	68	58	56	64	55	53
				Exposed	96	96	92	96	91	86	96	85	81	94	80	77	89	76	72	85	72	69	81	69	66	77	66	64	71	61	59	66	57	55	62	54	51	58	50	48	55	48	46	52	45	0
		3:12	14.0	Non-Exposed	96	96	96	96	96	96	96	96	96	96	96	96	96	96	93	96	93	88	96	88	84	96	84	80	89	76	73	83	70	68	77	66	63	72	62	59	68	58	56	64	55	53
				Exposed	96	96	91	96	90	86	96	85	81	93	80	76	89	76	72	85	72	69	81	69	66	77	66	64	71	61	59	66	57	55	62	54	51	58	50	48	55	47	46	52	45	0
		4:12	18.4	Non-Exposed	96	96	96	96	96	96	96	96	96	96	96	96	96	96	92	96	92	88	96	88	83	96	83	79	89	76	72	82	70	67	77	66	63	72	62	59	67	58	56	64	55	53
				Exposed	96	96	91	96	90	85	96	84	80	93	80	76	88	76	72	84	72	69	80	69	66	77	66	63	71	61	59	66	57	55	62	53	51	58	50	48	55	47	46	52	45	0
		5:12	22.6	Non-Exposed	96	96		96	96		96	96		96	96		96	96		96	96		96	96		96	93		96	85		96	78		90	72		83	68		78	64		73	60	
				Exposed	96	96		96	96		96	94		96	89		96	84		96	80		95	76		91	73		83	67		76	63		70	59		66	55		62	52		59	49	
		6:12	26.6	Non-Exposed	96	96		96	96		96	96		96	96		96	96		96	96		96	96		96	93		96	85		96	78		90	72		83	67		77	64		72	60	
				Exposed	96	96		96	96		96	94		96	89		96	84		96	80		95	76		90	72		82	67		76	62		70	58		66	55		62	52		59	49	
10		7:12	30.3	Non-Exposed	96	96	96	96	96	96	96	96	96	96	96	96	96	94	90	96	89	85	96	84	80	96	80	76	96	73	68	92	67	63	85	62	58	79	58	54	74	54	50	70	51	47
				Exposed	96	92	89	96	86	82	96	81	77	96	76	72	96	72	68	95	69	64	90	65	61	86	63	58	78	57	53	72	53	49	67	49	45	63	46	42	60	44	0	57	0	0
		8:12	33.7	Non-Exposed	96	96	96	96	96	96	96	96	96	96	96	96	96	93	90	96	88	84	96	84	80	96	80	75	96	72	68	92	67	63	85	62	58	79	58	54	74	54	50	69	51	47
				Exposed	96	92	88	96	86	82	96	81	76	96	76	72	96	72	68	94	68	64	90	65	61	86	62	58	78	57	53	72	53	49	67	49	45	63	46	42	60	44	0	57	0	0
		9:12	36.9	Non-Exposed	96	96	96	96	96	96	96	96	96	96	96	95	96	93	89	96	88	84	96	84	79	96	79	75	96	72	68	92	67	63	85	62	58	79	58	54	74	54	50	69	51	47
				Exposed	96	92	88	96	86	82	96	81	76	96	76	71	96	72	68	94	68	64	89	65	61	85	62	58	78	57	53	72	53	49	67	49	45	63	46	42	60	44	0	57	0	0
		10:12	39.8	Non-Exposed	96	96	96	96	96	96	96	96	96	96	96	95	96	93	89	96	88	84	96	83	79	96	79	75	96	72	68	91	67	62	85	62	58	79	58	54	73	54	50	69	51	47
				Exposed	96	91	87	96	85	81	96	80	76	96	76	71	96	72	67	94	68	64	89	65	61	85	62	58	78	57	53	72	53	49	67	49	45	63	46	42	60	44	0	57	0	0
		11:12	42.5	Non-Exposed	96	96	96	96	96	96	96	96	96	96	96	94	96	92	89	96	87	83	96	83	79	96	79	75	96	72	68	91	66	62	84	62	58	78	58	54	73	54	50	69	51	47
				Exposed	96	91	87	96	85	81	96	80	76	96	76	71	96	71	67	93	68	64	89	65	61	85	62	58	78	57	53	72	53	49	67	49	45	63	46	42	60	44	0	56	0	0
		12:12	45	Non-Exposed	96	96	96	96	96	96	96	96	96	96	96	94	96	92	88	96	87	83	96	83	79	96	79	75	96	72	68	91	66	62	84	62	58	78	58	53	73	54	50	69	51	47
				Exposed	96	91	87	96	85	81	96	80	76	96	75	71	96	71	67	93	68	64	89	65	61	85	62	58	77	57	53	71	53	49	67	49	45	63	46	42	60	44	0	56	0	0
	D	2:12	9.5	Non-Exposed	96	96	96	96	96	96	96	96	94	96	93	89	96	88	84	96	84	80	93	80	76	89	76	72	82	69	67	75	65	62	70	61	58	66	57	55	62	54	52	59	51	49
				Exposed	96	87	83	95	82	78	90	77	73	85	72	69	81	69	66	77	66	63	74	63	61	71	61	58	65	56	54	61	53	50	57	49	47	54	46	44	51	0	0	48	0	0
		3:12	14.0	Non-Exposed	96	96	96	96	96	96	96	96	94	96	93	88	96	88	84	96	83	79	92	79	75	88	75	72	81	69	66	75	65	62	70	60	58	66	57	55	62	54	51	59	51	49
				Exposed	96	87	82	95	81	77	89	76	73	85	72	69	81	69	66	77	66	63	73	63	61	70	61	58	65	56	54	61	52	50	57	49	47	53	46	44	50	0	0	48	0	0
		4:12	18.4	Non-Exposed	96	96	96	96	96	96	96	96	93	96	92	88	96	87	83	96	83	79	92	79	75	88	75	72	81	69	66	75	64	62	70	60	58	66	57	54	62	54	51	59	51	49
				Exposed	96	86	82	94	81	77	89	76	73	84	72	69	80	69	66	77	66	63	73	63	61	70	61	58	65	56	54	61	52	50	57	49	47	53	46	0	50	0	0	48	0	0
		5:12	22.6	Non-Exposed	96	96		96	96		96	96		96	96		96	96		96	93		96	88		96	84		96	77		88	71		81	66		75	62		70	59		66	55	
				Exposed	96	96		96	90		96	85		96	80		95	76		90	72		86	69		82	66		74	62		69	57		64	54		61	51		57	48		54	45	
		6:12	26.6	Non-Exposed	96	96		96	96		96	96		96	96		96	96		96	92		96	88		96	84		95	76		87	70		81	66		75	62		70	59		66	55	
				Exposed	96	96		96	90		96	85		96	80		95	76		90	72		85	69		81	66		74	61		69	57		64	54		60	50		57	48		54	45	
		7:12	30.3	Non-Exposed	96	96	96	96	96	96	96	95	91	96	89	85	96	84	80	96	80	75	96	75	71	96	72	68	91	66	62	83	61	57	77	56	52	72	53	49	68	49	45	64	47	42
				Exposed	96	83	78	96	77	73	96	73	68	95	69	65	90	65	61	86	62	58	81	59	55	78	57	53	71	52	48	66	48	44	62	45	41	58	43	0	55	0	0	52	0	0
		8:12	33.7	Non-Exposed	96	96	96	96	96	96	96	94	91	96	89	85	96	84	80	96	79	75	96	75	71	96	72	67	90	66	61	83	61	56	77	56	52	71	53	48	67	49	45	64	47	42
				Exposed	96	82	78	96	77	73	96	73	68	95	69	64	90	65	61	85	62	58	81	59	55	77	57	52	71	52	48	66	48	44	62	45	41	58	43	0	55	0	0	52	0	0
		9:12	36.9	Non-Exposed	96	96	96	96	96	96	96	94	90	96	88	84	96	83	79	96	79	75	96	75	71	96	71	67	90	66	61	83	61	56	77	56	52	71	52	48	67	49	45	64	47	42
				Exposed	96	82	78	96	77	73	96	72	68	94	69	64	89	65	61	85	62	58	81	59	55	77	57	52	71	52	48	66	48	44	62	45	41	58	42	0	55	0	0	52	0	0
		10:12	39.8	Non-Exposed	96	96	96	96	96	96	96	93	90	96	88	84	96	83	79	96	79	74	96	75	70	96	71	67	90	65	61	83	60	56	76	56	52	71	52	48	67	49	45	64	47	42
				Exposed	96	82	78	96	77	72	96	72	68	94	68	64	89	65	61	85	62	58	81	59	55	77	57	52	71	52	48	66	48	44	62	45	41	58	42	0	55	0	0	52	0	0
		11:12	42.5	Non-Exposed	96	96	96	96	96	96	96	93	89	96	88	84	96	83	79	96	79	74	96	75	70	96	71	67	89	65	61	82	60	56	76	56	52	71	52	48	67	49	45	64	47	42
				Exposed	96	82	78	96	77	72	96	72	68	94	68	64	89	65	61	84	62	58	80	59	55	77	56	52	70	52	48	66	48	44	62	45	41	58	42	0	55	0	0	52	0	0
		12:12	45	Non-Exposed	96	96	96	96	96	95	96	93	89	96	87	84	96	83	79	96	78	74	96	75	70	96	71	67	89	65	61	82	60	56	76	56	52	71	52	48	67	49	45	64	46	42
				Exposed	96	82	77	96	76	72	96	72	68	93	68	64	89	65	61	84	62	58	80	59	55	77	56	52	70	52	48	66	48	44	62	45	41	58	42	0	55	0	0	52	0	0

Tamarack 2.3 Rail – Hip Flush-Mount on 30 Foot Maximum Mean Roof Height – Landscape – Panel Width = 40 Inches or Less

Ground Snow Load	Exposure Category	Roof Pitch	Roof Angle	Wind Speed (mph)	95			100			105			110			115			120			125			130			140			150			160			170			180			190		
				Roof Area	1	2	3	1	2	3	1	2	3	1	2	3	1	2	3	1	2	3	1	2	3	1	2	3	1	2	3	1	2	3	1	2	3	1	2	3	1	2	3	1	2	3
15	B	2:12	9.5	Non-Exposed	89	89	89	89	89	89	89	89	89	89	89	89	89	89	89	89	89	89	89	89	89	89	89	89	89	89	89	89	87	83	88	80	76	87	74	71	82	70	67	77	66	63
				Exposed	89	89	89	89	89	89	89	89	89	89	89	89	89	89	89	89	89	85	89	85	81	89	81	77	86	74	70	80	68	65	74	64	61	69	60	58	65	56	54	62	53	51
		3:12	14.0	Non-Exposed	86	86	86	86	86	86	86	86	86	86	86	86	86	86	86	86	86	86	86	86	86	86	86	86	86	86	86	86	86	82	86	80	76	84	74	71	81	69	67	77	66	63
				Exposed	86	86	86	86	86	86	86	86	86	86	86	86	86	86	86	86	86	84	86	84	80	86	80	76	86	73	70	80	68	65	74	64	61	69	60	57	65	56	54	62	53	51
		4:12	18.4	Non-Exposed	90	90	90	90	90	90	90	90	90	90	90	90	90	90	90	90	90	90	90	90	90	90	90	90	90	90	89	90	86	82	90	80	76	86	74	70	81	69	66	76	66	63
				Exposed	90	90	90	90	90	90	90	90	90	90	90	90	90	90	89	90	88	84	90	84	80	90	80	76	86	73	70	79	68	65	74	63	61	69	60	57	65	56	54	62	53	51
		5:12	22.6	Non-Exposed	91	91		91	91		91	91		91	91		91	91		91	91		91	91		91	91		91	91		91	91		91	89		89	82		87	77		85	72	
				Exposed	91	91		91	91		91	91		91	91		91	91		91	91		91	91		91	89		91	81		91	75		86	70		80	65		75	62		70	58	
		6:12	26.6	Non-Exposed	92	92		92	92		92	92		92	92		92	92		92	92		92	92		92	92		92	92		92	92		92	88		90	82		88	76		86	72	
				Exposed	92	92		92	92		92	92		92	92		92	92		92	92		92	92		92	89		92	81		92	75		86	69		80	65		74	62		70	58	
		7:12	30.3	Non-Exposed	93	93	93	93	93	93	93	93	93	93	93	93	93	93	93	93	93	93	93	93	93	93	93	93	93	90	87	93	83	78	93	76	72	92	70	66	90	66	62	85	62	58
				Exposed	93	93	93	93	93	93	93	93	93	93	93	91	93	90	86	93	85	81	93	81	76	93	77	72	93	70	66	89	64	60	82	60	56	76	56	52	71	52	48	67	49	45
		8:12	33.7	Non-Exposed	95	95	95	95	95	95	95	95	95	95	95	95	95	95	95	95	95	95	95	95	95	95	95	95	95	90	86	95	82	78	95	76	71	93	70	66	91	66	62	85	62	58
				Exposed	95	95	95	95	95	95	95	95	95	95	95	91	95	89	85	95	85	80	95	80	76	95	76	72	95	70	65	88	64	60	82	60	56	76	56	52	71	52	48	67	49	45
		9:12	36.9	Non-Exposed	96	96	96	96	96	96	96	96	96	96	96	96	96	96	96	96	96	96	96	96	96	96	96	95	96	90	86	96	82	78	96	76	71	95	70	66	90	66	62	85	62	58
				Exposed	96	96	96	96	96	96	96	96	96	96	94	91	96	89	85	96	84	80	96	80	76	96	76	72	96	69	65	88	64	60	81	60	55	76	56	51	71	52	48	67	49	45
		10:12	39.8	Non-Exposed	96	96	96	96	96	96	96	96	96	96	96	96	96	96	96	96	96	96	96	96	96	96	96	95	96	89	85	96	82	78	96	75	71	96	70	66	90	66	61	84	62	57
				Exposed	96	96	96	96	96	96	96	96	96	96	94	90	96	89	85	96	84	80	96	80	75	96	76	71	95	69	65	88	64	60	81	60	55	76	56	51	71	52	48	67	49	45
		11:12	42.5	Non-Exposed	96	96	96	96	96	96	96	96	96	96	96	96	96	96	96	96	96	96	96	96	96	96	96	95	96	89	85	96	82	77	96	75	71	96	70	66	90	65	61	84	62	57
				Exposed	96	96	96	96	96	96	96	96	96	96	93	90	96	88	84	96	84	80	96	80	75	96	76	71	95	69	65	87	64	60	81	59	55	75	55	51	71	52	48	67	49	45
		12:12	45	Non-Exposed	96	96	96	96	96	96	96	96	96	96	96	96	96	96	96	96	96	96	96	96	94	96	89	85	96	81	77	96	75	71	96	70	66	89	65	61	84	61	57
				Exposed	96	96	96	96	96	96	96	96	96	96	93	90	96	88	84	96	84	79	96	79	75	96	76	71	95	69	65	87	64	60	81	59	55	75	55	51	70	52	48	67	49	45
	C	2:12	9.5	Non-Exposed	89	89	89	89	89	89	89	89	89	89	89	89	89	89	89	89	89	88	89	88	84	89	84	80	87	77	73	83	71	68	77	66	63	72	62	60	68	58	56	64	55	53
				Exposed	89	89	89	89	89	86	89	85	81	89	80	77	89	76	72	85	72	69	81	69	66	77	66	64	71	61	59	66	57	55	62	54	51	58	50	48	55	48	46	52	45	0
		3:12	14.0	Non-Exposed	86	86	86	86	86	86	86	86	86	86	86	86	86	86	86	86	86	86	86	86	84	86	84	80	85	76	73	83	70	68	77	66	63	72	62	59	68	58	56	64	55	53
				Exposed	86	86	86	86	86	86	86	85	81	86	80	76	86	76	72	85	72	69	81	69	66	77	66	64	71	61	59	66	57	55	62	54	51	58	50	48	55	47	46	52	45	0
		4:12	18.4	Non-Exposed	90	90	90	90	90	90	90	90	90	90	90	90	90	90	90	90	90	88	90	88	83	90	83	79	89	76	72	82	70	67	77	66	63	72	62	59	67	58	56	64	55	53
				Exposed	90	90	90	90	90	85	90	84	80	90	80	76	88	76	72	84	72	69	80	69	66	77	66	63	71	61	59	66	57	55	62	53	51	58	50	48	55	47	46	52	45	0
		5:12	22.6	Non-Exposed	91	91		91	91		91	91		91	91		91	91		91	91		91	91		91	91		90	85		87	78		85	72		83	68		78	64		73	60	
				Exposed	91	91		91	91		91	91		91	89		91	84		91	80		91	76		91	73		83	67		76	63		70	59		66	55		62	52		59	49	
		6:12	26.6	Non-Exposed	92	92		92	92		92	92		92	92		92	92		92	92		92	92		92	92		91	85		88	78		86	72		83	67		77	64		72	60	
				Exposed	92	92		92	92		92	92		92	89		92	84		92	80		92	76		90	72		82	67		76	62		70	58		66	55		62	52		59	49	
15		7:12	30.3	Non-Exposed	93	93	93	93	93	93	93	93	93	93	93	93	93	93	90	93	89	85	93	84	80	93	80	76	92	73	68	90	67	63	85	62	58	79	58	54	74	54	50	70	51	47
				Exposed	93	92	89	93	86	82	93	81	77	93	76	72	93	72	68	93	69	64	90	65	61	86	63	58	78	57	53	72	53	49	67	49	45	63	46	42	60	44	0	57	0	0
		8:12	33.7	Non-Exposed	95	95	95	95	95	95	95	95	95	95	95	95	95	93	90	95	88	84	95	84	80	95	80	75	94	72	68	92	67	63	85	62	58	79	58	54	74	54	50	69	51	47
				Exposed	95	92	88	95	86	82	95	81	76	95	76	72	95	72	68	94	68	64	90	65	61	86	62	58	78	57	53	72	53	49	67	49	45	63	46	42	60	44	0	57	0	0
		9:12	36.9	Non-Exposed	96	96	96	96	96	96	96	96	96	96	96	95	96	93	89	96	88	84	96	84	79	96	79	75	96	72	68	92	67	63	85	62	58	79	58	54	74	54	50	69	51	47
				Exposed	96	92	88	96	86	82	96	81	76	96	76	71	96	72	68	94	68	64	89	65	61	85	62	58	78	57	53	72	53	49	67	49	45	63	46	42	60	44	0	57	0	0
		10:12	39.8	Non-Exposed	96	96	96	96	96	96	96	96	96	96	96	95	96	93	89	96	88	84	96	83	79	96	79	75	96	72	68	91	67	62	85	62	58	79	58	54	73	54	50	69	51	47
				Exposed	96	91	87	96	85	81	96	80	76	96	76	71	96	72	67	94	68	64	89	65	61	85	62	58	78	57	53	72	53	49	67	49	45	63	46	42	60	44	0	57	0	0
		11:12	42.5	Non-Exposed	96	96	96	96	96	96	96	96	96	96	96	94	96	92	89	96	87	83	96	83	79	96	79	75	96	72	68	91	66	62	84	62	58	78	58	54	73	54	50	69	51	47
				Exposed	96	91	87	96	85	81	96	80	76	96	76	71	96	71	67	93	68	64	89	65	61	85	62	58	78	57	53	72	53	49	67	49	45	63	46	42	60	44	0	56	0	0
		12:12	45	Non-Exposed	96	96	96	96	96	96	96	96	96	96	96	94	96	92	88	96	87	83	96	83	79	96	79	75	96	72	68	91	66	62	84	62	58	78	58	53	73	54	50	69	51	47
				Exposed	96	91	87	96	85	81	96	80	76	96	75	71	96	71	67	93	68	64	89	65	61	85	62	58	77	57	53	71	53	49	67	49	45	63	46	42	60	44	0	56	0	0
	D	2:12	9.5	Non-Exposed	89	89	89	89	89	89	89	89	89	89	89	89	89	88	84	89	84	80	88	80	76	87	76	72	82	69	67	75	65	62	70	61	58	66	57	55	62	54	52	59	51	49
				Exposed	89	87	83	89	82	78	89	77	73	85	72	69	81	69	66	77	66	63	74	63	61	71	61	58	65	56	54	61	53	50	57	49	47	54	46	44	51	0	0	48	0	0
		3:12	14.0	Non-Exposed	86	86	86	86	86	86	86	86	86	86	86	86	86	86	84	86	83	79	86	79	75	84	75	72	81	69	66	75	65	62	70	60	58	66	57	55	62	54	51	59	51	49
				Exposed	86	86	82	86	81	77	86	76	73	85	72	69	81	69	66	77	66	63	73	63	61	70	61	58	65	56	54	61	52	50	57	49	47	53	46	44	50	0	0	48	0	0
		4:12	18.4	Non-Exposed	90	90	90	90	90	90	90	90	90	90	90	88	90	87	83	90	83	79	90	79	75	88	75	72	81	69	66	75	64	62	70	60	58	66	57	54	62	54	51	59	51	49
				Exposed	90	86	82	90	81	77	89	76	73	84	72	69	80	69	66	77	66	63	73	63	61	70	61	58	65	56	54	61	52	50	57	49	47	53	46	0	50	0	0	48	0	0
		5:12	22.6	Non-Exposed	91	91		91	91		91	91		91	91		91	91		91	91		91	88		89	84		87	77		84	71		81	66		75	62		70	59		66	55	
				Exposed	91	91		91	90		91	85		91	80		91	76		90	72		86	69		82	66		74	62		69	57		64	54		61	51		57	48		54	45	
		6:12	26.6	Non-Exposed	92	92		92	92		92	92		92	92		92	92		92	92		92	88		90	84		88	76		85	70		81	66		75	62		70	59		66	55	
				Exposed	92	92		92	90		92	85		92	80		92	76		90	72		85	69		81	66		74	61		69	57		64	54		60	50		57	48		54	45	
		7:12	30.3	Non-Exposed	93	93	93	93	93	93	93	93	91	93	89	85	93	84	80	93	80	75	93	75	71	92	72	68	89	66	62	83	61	57	77	56	52	72	53	49	68	49	45	64	47	42
				Exposed	93	83	78	93	77	73	93	73	68	93	69	65	90	65	61	86	62	58	81	59	55	78	57	53	71	52	48	66	48	44	62	45	41	58	43	0	55	0	0	52	0	0
		8:12	33.7	Non-Exposed	95	95	95	95	95	95	95	94	91	95	89	85	95	84	80	95	79	75	95	75	71	94	72	67	90	66	61	83	61	56	77	56	52	71	53	48	67	49	45	64	47	42
				Exposed	95	82	78	95	77	73	95	73	68	95	69	64	90	65	61	85	62	58	81	59	55	77	57	52	71	52	48	66	48	44	62	45	41	58	43	0	55	0	0	52	0	0
		9:12	36.9	Non-Exposed	96	96	96	96	96	96	96	94	90	96	88	84	96	83	79	96	79	75	96	75	71	96	71	67	90	66	61	83	61	56	77	56	52	71	52	48	67	49	45	64	47	42
				Exposed	96	82	78	96	77	73	96	72	68	94	69	64	89	65	61	85	62	58	81	59	55	77	57	52	71	52	48	66	48	44	62	45	41	58	42	0	55	0	0	52	0	0
		10:12	39.8	Non-Exposed	96	96	96	96	96	96	96	93	90	96	88	84	96	83	79	96	79	74	96	75	70	96	71	67	90	65	61	83	60	56	76	56	52	71	52	48	67	49	45	64	47	42
				Exposed	96	82	78	96	77	72	96	72	68	94	68	64	89	65	61	85	62	58	81	59	55	77	57	52	71	52	48	66	48	44	62	45	41	58	42	0	55	0	0	52	0	0
		11:12	42.5	Non-Exposed	96	96	96	96	96	96	96	93	89	96	88	84	96	83	79	96	79	74	96	75	70	96	71	67	89	65	61	82	60	56	76	56	52	71	52	48	67	49	45	64	47	42
				Exposed	96	82	78	96	77	72	96	72	68	94	68	64	89	65	61	84	62	58	80	59	55	77	56	52	70	52	48	66	48	44	62	45	41	58	42	0	55	0	0	52	0	0
		12:12	45	Non-Exposed	96	96	96	96	96	95	96	93	89	96	87	84	96	83	79	96	78	74	96	75	70	96	71	67	89	65	61	82	60	56	76	56	52	71	52	48	67	49	45	64	46	42
				Exposed	96	82	77	96	76	72	96	72	68	93	68	64	89	65	61	84	62	58	80	59	55	77	56	52	70	52	48	66	48	44	62	45	41	58	42	0	55	0	0	52	0	0

Tamarack 2.3 Rail – Hip Flush-Mount on 30 Foot Maximum Mean Roof Height – Landscape – Panel Width = 40 Inches or Less

Ground Snow Load	Exposure Category	Roof Pitch	Roof Angle	Wind Speed (mph)	95			100			105			110			115			120			125			130			140			150			160			170			180			190		
				Roof Area	1	2	3	1	2	3	1	2	3	1	2	3	1	2	3	1	2	3	1	2	3	1	2	3	1	2	3	1	2	3	1	2	3	1	2	3	1	2	3	1	2	3
20	B	2:12	9.5	Non-Exposed	81	81	81	81	81	81	81	81	81	81	81	81	81	81	81	81	81	81	81	81	81	81	81	81	81	81	81	81	81	81	81	80	76	79	74	71	78	70	67	76	66	63
				Exposed	81	81	81	81	81	81	81	81	81	81	81	81	81	81	81	81	81	81	81	81	81	81	81	77	81	74	70	80	68	65	74	64	61	69	60	58	65	56	54	62	53	51
		3:12	14.0	Non-Exposed	79	79	79	79	79	79	79	79	79	79	79	79	79	79	79	79	79	79	79	79	79	79	79	79	79	79	79	79	79	79	78	78	76	77	74	71	75	69	67	74	66	63
				Exposed	79	79	79	79	79	79	79	79	79	79	79	79	79	79	79	79	79	79	79	79	79	79	79	76	79	73	70	79	68	65	74	64	61	69	60	57	65	56	54	62	53	51
		4:12	18.4	Non-Exposed	83	83	83	83	83	83	83	83	83	83	83	83	83	83	83	83	83	83	83	83	83	83	83	83	83	83	83	83	83	82	82	80	76	81	74	70	79	69	66	76	66	63
				Exposed	83	83	83	83	83	83	83	83	83	83	83	83	83	83	83	83	83	83	83	83	80	83	80	76	83	73	70	79	68	65	74	63	61	69	60	57	65	56	54	62	53	51
		5:12	22.6	Non-Exposed	84	84		84	84		84	84		84	84		84	84		84	84		84	84		84	84		84	84		84	84		83	83		82	82		80	77		79	72	
				Exposed	84	84		84	84		84	84		84	84		84	84		84	84		84	84		84	84		84	81		84	75		83	70		80	65		75	62		70	58	
		6:12	26.6	Non-Exposed	85	85		85	85		85	85		85	85		85	85		85	85		85	85		85	85		85	85		85	85		85	85		83	82		82	76		80	72	
				Exposed	85	85		85	85		85	85		85	85		85	85		85	85		85	85		85	85		85	81		85	75		85	69		80	65		74	62		70	58	
		7:12	30.3	Non-Exposed	87	87	87	87	87	87	87	87	87	87	87	87	87	87	87	87	87	87	87	87	87	87	87	87	87	87	87	87	83	78	87	76	72	85	70	66	83	66	62	82	62	58
				Exposed	87	87	87	87	87	87	87	87	87	87	87	87	87	87	86	87	85	81	87	81	76	87	77	72	87	70	66	87	64	60	82	60	56	76	56	52	71	52	48	67	49	45
		8:12	33.7	Non-Exposed	89	89	89	89	89	89	89	89	89	89	89	89	89	89	89	89	89	89	89	89	89	89	89	89	89	89	86	89	82	78	89	76	71	87	70	66	85	66	62	83	62	58
				Exposed	89	89	89	89	89	89	89	89	89	89	89	89	89	89	85	89	85	80	89	80	76	89	76	72	89	70	65	88	64	60	82	60	56	76	56	52	71	52	48	67	49	45
		9:12	36.9	Non-Exposed	91	91	91	91	91	91	91	91	91	91	91	91	91	91	91	91	91	91	91	91	91	91	91	91	91	90	86	91	82	78	91	76	71	89	70	66	87	66	62	85	62	58
				Exposed	91	91	91	91	91	91	91	91	91	91	91	91	91	89	85	91	84	80	91	80	76	91	76	72	91	69	65	88	64	60	81	60	55	76	56	51	71	52	48	67	49	45
		10:12	39.8	Non-Exposed	93	93	93	93	93	93	93	93	93	93	93	93	93	93	93	93	93	93	93	93	93	93	93	93	93	89	85	93	82	78	93	75	71	91	70	66	89	66	61	84	62	57
				Exposed	93	93	93	93	93	93	93	93	93	93	93	90	93	89	85	93	84	80	93	80	75	93	76	71	93	69	65	88	64	60	81	60	55	76	56	51	71	52	48	67	49	45
		11:12	42.5	Non-Exposed	95	95	95	95	95	95	95	95	95	95	95	95	95	95	95	95	95	95	95	95	95	95	95	95	95	89	85	95	82	77	95	75	71	94	70	66	90	65	61	84	62	57
				Exposed	95	95	95	95	95	95	95	95	95	95	93	90	95	88	84	95	84	80	95	80	75	95	76	71	95	69	65	87	64	60	81	59	55	75	55	51	71	52	48	67	49	45
		12:12	45	Non-Exposed	96	96	96	96	96	96	96	96	96	96	96	96	96	96	96	96	96	96	96	96	94	96	89	85	96	81	77	96	75	71	96	75	71	96	70	66	89	65	61	84	61	57
				Exposed	96	96	96	96	96	96	96	96	96	96	93	90	96	88	84	96	84	79	96	79	75	96	76	71	95	69	65	87	64	60	81	59	55	75	55	51	70	52	48	67	49	45
	C	2:12	9.5	Non-Exposed	81	81	81	81	81	81	81	81	81	81	81	81	81	81	81	81	81	81	81	81	81	81	81	80	80	77	73	78	71	68	76	66	63	72	62	60	68	58	56	64	55	53
				Exposed	81	81	81	81	81	81	81	81	81	81	80	77	81	76	72	81	72	69	81	69	66	77	66	64	71	61	59	66	57	55	62	54	51	58	50	48	55	48	46	52	45	0
		3:12	14.0	Non-Exposed	79	79	79	79	79	79	79	79	79	79	79	79	79	79	79	79	79	79	79	79	79	79	79	79	77	76	73	76	70	68	74	66	63	72	62	59	68	58	56	64	55	53
				Exposed	79	79	79	79	79	79	79	79	79	79	79	76	79	76	72	79	72	69	79	69	66	77	66	64	71	61	59	66	57	55	62	54	51	58	50	48	55	47	46	52	45	0
		4:12	18.4	Non-Exposed	83	83	83	83	83	83	83	83	83	83	83	83	83	83	83	83	83	83	83	83	83	83	83	79	82	76	72	80	70	67	77	66	63	72	62	59	67	58	56	64	55	53
				Exposed	83	83	83	83	83	83	83	83	80	83	80	76	83	76	72	83	72	69	80	69	66	77	66	63	71	61	59	66	57	55	62	53	51	58	50	48	55	47	46	52	45	0
		5:12	22.6	Non-Exposed	84	84		84	84		84	84		84	84		84	84		84	84		84	84		84	84		82	82		81	78		79	72		77	68		75	64		73	60	
				Exposed	84	84		84	84		84	84		84	84		84	84		84	80		84	76		84	73		82	67		76	63		70	59		66	55		62	52		59	49	
		6:12	26.6	Non-Exposed	85	85		85	85		85	85		85	85		85	85		85	85		85	85		85	85		84	84		82	78		80	72		78	67		76	64		72	60	
				Exposed	85	85		85	85		85	85		85	85		85	84		85	80		85	76		85	72		82	67		76	62		70	58		66	55		62	52		59	49	
20		7:12	30.3	Non-Exposed	87	87	87	87	87	87	87	87	87	87	87	87	87	87	87	87	87	85	87	84	80	87	80	76	86	73	68	84	67	63	82	62	58	79	58	54	74	54	50	70	51	47
				Exposed	87	87	87	87	86	82	87	81	77	87	76	72	87	72	68	87	69	64	87	65	61	86	63	58	78	57	53	72	53	49	67	49	45	63	46	42	60	44	0	57	0	0
		8:12	33.7	Non-Exposed	89	89	89	89	89	89	89	89	89	89	89	89	89	89	89	89	88	84	89	84	80	89	80	75	88	72	68	85	67	63	83	62	58	79	58	54	74	54	50	69	51	47
				Exposed	89	89	88	89	86	82	89	81	76	89	76	72	89	72	68	89	68	64	89	65	61	86	62	58	78	57	53	72	53	49	67	49	45	63	46	42	60	44	0	57	0	0
		9:12	36.9	Non-Exposed	91	91	91	91	91	91	91	91	91	91	91	91	91	91	89	91	88	84	91	84	79	91	79	75	90	72	68	88	67	63	85	62	58	79	58	54	74	54	50	69	51	47
				Exposed	91	91	88	91	86	82	91	81	76	91	76	71	91	72	68	91	68	64	89	65	61	85	62	58	78	57	53	72	53	49	67	49	45	63	46	42	60	44	0	57	0	0
		10:12	39.8	Non-Exposed	93	93	93	93	93	93	93	93	93	93	93	93	93	93	89	93	88	84	93	83	79	93	79	75	92	72	68	90	67	62	85	62	58	79	58	54	73	54	50	69	51	47
				Exposed	93	91	87	93	85	81	93	80	76	93	76	71	93	72	67	93	68	64	89	65	61	85	62	58	78	57	53	72	53	49	67	49	45	63	46	42	60	44	0	57	0	0
		11:12	42.5	Non-Exposed	95	95	95	95	95	95	95	95	95	95	95	94	95	92	89	95	87	83	95	83	79	95	79	75	95	72	68	91	66	62	84	62	58	78	58	54	73	54	50	69	51	47
				Exposed	95	91	87	95	85	81	95	80	76	95	76	71	95	71	67	93	68	64	89	65	61	85	62	58	78	57	53	72	53	49	67	49	45	63	46	42	60	44	0	56	0	0
		12:12	45	Non-Exposed	96	96	96	96	96	96	96	96	96	96	96	94	96	92	88	96	87	83	96	83	79	96	79	75	96	72	68	91	66	62	84	62	58	78	58	53	73	54	50	69	51	47
				Exposed	96	91	87	96	85	81	96	80	76	96	75	71	96	71	67	93	68	64	89	65	61	85	62	58	77	57	53	71	53	49	67	49	45	63	46	42	60	44	0	56	0	0
	D	2:12	9.5	Non-Exposed	81	81	81	81	81	81	81	81	81	81	81	81	81	81	81	81	81	80	80	80	76	79	76	72	78	69	67	75	65	62	70	61	58	66	57	55	62	54	52	59	51	49
				Exposed	81	81	81	81	81	78	81	77	73	81	72	69	81	69	66	77	66	63	74	63	61	71	61	58	65	56	54	61	53	50	57	49	47	54	46	44	51	0	0	48	0	0
		3:12	14.0	Non-Exposed	79	79	79	79	79	79	79	79	79	79	79	79	79	79	79	79	79	79	78	78	75	77	75	72	75	69	66	74	65	62	70	60	58	66	57	55	62	54	51	59	51	49
				Exposed	79	79	79	79	79	77	79	76	73	79	72	69	79	69	66	77	66	63	73	63	61	70	61	58	65	56	54	61	52	50	57	49	47	53	46	44	50	0	0	48	0	0
		4:12	18.4	Non-Exposed	83	83	83	83	83	83	83	83	83	83	83	83	83	83	83	83	83	79	82	79	75	81	75	72	79	69	66	75	64	62	70	60	58	66	57	54	62	54	51	59	51	49
				Exposed	83	83	82	83	81	77	83	76	73	83	72	69	80	69	66	77	66	63	73	63	61	70	61	58	65	56	54	61	52	50	57	49	47	53	46	0	50	0	0	48	0	0
		5:12	22.6	Non-Exposed	84	84		84	84		84	84		84	84		84	84		84	84		83	83		82	82		80	77		78	71		76	66		74	62		70	59		66	55	
				Exposed	84	84		84	84		84	84		84	80		84	76		84	72		83	69		82	66		74	62		69	57		64	54		61	51		57	48		54	45	
		6:12	26.6	Non-Exposed	85	85		85	85		85	85		85	85		85	85		85	85		85	85		84	84		81	76		79	70		77	66		75	62		70	59		66	55	
				Exposed	85	85		85	85		85	85		85	80		85	76		85	72		85	69		81	66		74	61		69	57		64	54		60	50		57	48		54	45	
		7:12	30.3	Non-Exposed	87	87	87	87	87	87	87	87	87	87	87	85	87	84	80	87	80	75	86	75	71	85	72	68	83	66	62	81	61	57	77	56	52	72	53	49	68	49	45	64	47	42
				Exposed	87	83	78	87	77	73	87	73	68	87	69	65	87	65	61	86	62	58	81	59	55	78	57	53	71	52	48	66	48	44	62	45	41	58	43	0	55	0	0	52	0	0
		8:12	33.7	Non-Exposed	89	89	89	89	89	89	89	89	89	89	89	85	89	84	80	89	79	75	88	75	71	87	72	67	85	66	61	83	61	56	77	56	52	71	53	48	67	49	45	64	47	42
				Exposed	89	82	78	89	77	73	89	73	68	89	69	64	89	65	61	85	62	58	81	59	55	77	57	52	71	52	48	66	48	44	62	45	41	58	43	0	55	0	0	52	0	0
		9:12	36.9	Non-Exposed	91	91	91	91	91	91	91	91	90	91	88	84	91	83	79	91	79	75	91	75	71	89	71	67	87	66	61	83	61	56	77	56	52	71	52	48	67	49	45	64	47	42
				Exposed	91	82	78	91	77	73	91	72	68	91	69	64	89	65	61	85	62	58	81	59	55	77	57	52	71	52	48	66	48	44	62	45	41	58	42	0	55	0	0	52	0	0
		10:12	39.8	Non-Exposed	93	93	93	93	93	93	93	93	90	93	88	84	93	83	79	93	79	74	93	75	70	92	71	67	89	65	61	83	60	56	76	56	52	71	52	48	67	49	45	64	47	42
				Exposed	93	82	78	93	77	72	93	72	68	93	68	64	89	65	61	85	62	58	81	59	55	77	57	52	71	52	48	66	48	44	62	45	41	58	42	0	55	0	0	52	0	0
		11:12	42.5	Non-Exposed	95	95	95	95	95	95	95	93	89	95	88	84	95	83	79	95	79	74	95	75	70	94	71	67	89	65	61	82	60	56	76	56	52	71	52	48	67	49	45	64	47	42
				Exposed	95	82	78	95	77	72	95	72	68	94	68	64	89	65	61	84	62	58	80	59	55	77	56	52	70	52	48	66	48	44	62	45	41	58	42	0	55	0	0	52	0	0
		12:12	45	Non-Exposed	96	96	96	96	96	95	96	93	89	96	87	84	96	83	79	96	78	74	96	75	70	96	71	67	89	65	61	82	60	56	76	56	52	71	52	48	67	49	45	64	46	42
				Exposed	96	82	77	96	76	72	96	72	68	93	68	64	89	65	61	84	62	58	80	59	55	77	56	52	70	52	48	66	48	44	62	45	41	58	42	0	55	0	0	52	0	0

Tamarack 2.3 Rail – Hip Flush-Mount on 30 Foot Maximum Mean Roof Height – Landscape – Panel Width = 40 Inches or Less

Ground Snow Load	Exposure Category	Roof Pitch	Roof Angle	Wind Speed (mph)	95			100			105			110			115			120			125			130			140			150			160			170			180			190		
				Roof Area	1	2	3	1	2	3	1	2	3	1	2	3	1	2	3	1	2	3	1	2	3	1	2	3	1	2	3	1	2	3	1	2	3	1	2	3	1	2	3	1	2	3
25	B	2:12	9.5	Non-Exposed	80	80	80	80	80	80	80	80	80	80	80	80	80	80	80	80	80	80	80	80	80	80	80	80	80	80	80	80	80	80	79	79	76	78	74	71	77	70	67	75	66	63
				Exposed	80	80	80	80	80	80	80	80	80	80	80	80	80	80	80	80	80	80	80	80	80	80	80	77	80	74	70	80	68	65	74	64	61	69	60	58	65	56	54	62	53	51
		3:12	14.0	Non-Exposed	77	77	77	77	77	77	77	77	77	77	77	77	77	77	77	77	77	77	77	77	77	77	77	76	77	77	77	77	77	77	77	77	76	75	74	71	74	69	67	73	66	63
				Exposed	77	77	77	77	77	77	77	77	77	77	77	77	77	77	77	77	77	77	77	77	77	77	77	76	77	73	70	77	68	65	74	64	61	69	60	57	65	56	54	62	53	51
		4:12	18.4	Non-Exposed	77	77	77	77	77	77	77	77	77	77	77	77	77	77	77	77	77	77	77	77	77	77	77	77	77	77	77	77	77	77	77	77	76	75	74	70	74	69	66	73	66	63
				Exposed	77	77	77	77	77	77	77	77	77	77	77	77	77	77	77	77	77	77	77	77	77	77	77	76	77	73	70	77	68	65	74	63	61	69	60	57	65	56	54	62	53	51
		5:12	22.6	Non-Exposed	78	78		78	78		78	78		78	78		78	78		78	78		78	78		78	78		78	78		78	78		77	77		76	76		75	75		74	72	
				Exposed	78	78		78	78		78	78		78	78		78	78		78	78		78	78		78	78		78	78		78	75		77	70		76	65		75	62		70	58	
		6:12	26.6	Non-Exposed	80	80		80	80		80	80		80	80		80	80		80	80		80	80		80	80		80	80		80	80		79	79		78	78		76	76		75	72	
				Exposed	80	80		80	80		80	80		80	80		80	80		80	80		80	80		80	80		80	80		80	75		79	69		78	65		74	62		70	58	
		7:12	30.3	Non-Exposed	81	81	81	81	81	81	81	81	81	81	81	81	81	81	81	81	81	81	81	81	81	81	81	81	81	81	81	81	81	78	81	76	72	79	70	66	78	66	62	77	62	58
				Exposed	81	81	81	81	81	81	81	81	81	81	81	81	81	81	81	81	81	81	81	81	76	81	77	72	81	70	66	81	64	60	81	60	56	76	56	52	71	52	48	67	49	45
		8:12	33.7	Non-Exposed	83	83	83	83	83	83	83	83	83	83	83	83	83	83	83	83	83	83	83	83	83	83	83	83	83	83	83	83	82	78	83	76	71	82	70	66	80	66	62	78	62	58
				Exposed	83	83	83	83	83	83	83	83	83	83	83	83	83	83	83	83	83	80	83	80	76	83	76	72	83	70	65	83	64	60	82	60	56	76	56	52	71	52	48	67	49	45
		9:12	36.9	Non-Exposed	86	86	86	86	86	86	86	86	86	86	86	86	86	86	86	86	86	86	86	86	86	86	86	86	86	86	86	86	82	78	85	76	71	84	70	66	82	66	62	81	62	58
				Exposed	86	86	86	86	86	86	86	86	86	86	86	86	86	86	85	86	84	80	86	80	76	86	76	72	86	69	65	86	64	60	81	60	55	76	56	51	71	52	48	67	49	45
		10:12	39.8	Non-Exposed	88	88	88	88	88	88	88	88	88	88	88	88	88	88	88	88	88	88	88	88	88	88	88	88	88	88	85	88	82	78	88	75	71	86	70	66	84	66	61	83	62	57
				Exposed	88	88	88	88	88	88	88	88	88	88	88	88	88	88	85	88	84	80	88	80	75	88	76	71	88	69	65	88	64	60	81	60	55	76	56	51	71	52	48	67	49	45
		11:12	42.5	Non-Exposed	91	91	91	91	91	91	91	91	91	91	91	91	91	91	91	91	91	91	91	91	91	91	91	91	91	89	85	91	82	77	91	75	71	89	70	66	87	65	61	84	62	57
				Exposed	91	91	91	91	91	91	91	91	91	91	91	90	91	88	84	91	84	80	91	80	75	91	76	71	91	69	65	87	64	60	81	59	55	75	55	51	71	52	48	67	49	45
		12:12	45	Non-Exposed	93	93	93	93	93	93	93	93	93	93	93	93	93	93	93	93	93	93	93	93	93	93	93	93	93	89	85	93	81	77	93	75	71	91	70	66	89	65	61	84	61	57
				Exposed	93	93	93	93	93	93	93	93	93	93	93	90	93	88	84	93	84	79	93	79	75	93	76	71	93	69	65	87	64	60	81	59	55	75	55	51	70	52	48	67	49	45
	C	2:12	9.5	Non-Exposed	80	80	80	80	80	80	80	80	80	80	80	80	80	80	80	80	80	80	80	80	80	80	80	80	78	77	73	77	71	68	75	66	63	72	62	60	68	58	56	64	55	53
				Exposed	80	80	80	80	80	80	80	80	80	80	80	77	80	76	72	80	72	69	80	69	66	77	66	64	71	61	59	66	57	55	62	54	51	58	50	48	55	48	46	52	45	0
		3:12	14.0	Non-Exposed	77	77	77	77	77	77	77	77	77	77	77	77	77	77	77	77	77	77	77	77	77	77	77	77	76	76	73	75	70	68	73	66	63	72	62	59	68	58	56	64	55	53
				Exposed	77	77	77	77	77	77	77	77	77	77	77	76	77	76	72	77	72	69	77	69	66	77	66	64	71	61	59	66	57	55	62	54	51	58	50	48	55	47	46	52	45	0
		4:12	18.4	Non-Exposed	77	77	77	77	77	77	77	77	77	77	77	77	77	77	77	77	77	77	77	77	77	77	77	77	76	76	72	74	70	67	73	66	63	71	62	59	67	58	56	64	55	53
				Exposed	77	77	77	77	77	77	77	77	77	77	77	76	77	76	72	77	72	69	77	69	66	77	66	63	71	61	59	66	57	55	62	53	51	58	50	48	55	47	46	52	45	0
		5:12	22.6	Non-Exposed	78	78		78	78		78	78		78	78		78	78		78	78		78	78		78	78		77	77		75	75		74	72		72	68		71	64		69	60	
				Exposed	78	78		78	78		78	78		78	78		78	78		78	78		78	76		78	73		77	67		75	63		70	59		66	55		62	52		59	49	
		6:12	26.6	Non-Exposed	80	80		80	80		80	80		80	80		80	80		80	80		80	80		80	80		78	78		77	77		75	72		73	67		72	64		70	60	
				Exposed	80	80		80	80		80	80		80	80		80	80		80	80		80	76		80	72		78	67		76	62		70	58		66	55		62	52		59	49	
		7:12	30.3	Non-Exposed	81	81	81	81	81	81	81	81	81	81	81	81	81	81	81	81	81	81	81	81	80	81	80	76	80	73	68	78	67	63	77	62	58	75	58	54	73	54	50	70	51	47
				Exposed	81	81	81	81	81	81	81	81	77	81	76	72	81	72	68	81	69	64	81	65	61	81	63	58	78	57	53	72	53	49	67	49	45	63	46	42	60	44	0	57	0	0
		8:12	33.7	Non-Exposed	83	83	83	83	83	83	83	83	83	83	83	83	83	83	83	83	83	83	83	83	80	83	80	75	82	72	68	80	67	63	79	62	58	77	58	54	74	54	50	69	51	47
				Exposed	83	83	83	83	83	82	83	81	76	83	76	72	83	72	68	83	68	64	83	65	61	83	62	58	78	57	53	72	53	49	67	49	45	63	46	42	60	44	0	57	0	0
		9:12	36.9	Non-Exposed	86	86	86	86	86	86	86	86	86	86	86	86	86	86	86	86	86	84	86	84	79	86	79	75	84	72	68	83	67	63	81	62	58	79	58	54	74	54	50	69	51	47
				Exposed	86	86	86	86	86	82	86	81	76	86	76	71	86	72	68	86	68	64	86	65	61	85	62	58	78	57	53	72	53	49	67	49	45	63	46	42	60	44	0	57	0	0
		10:12	39.8	Non-Exposed	88	88	88	88	88	88	88	88	88	88	88	88	88	88	88	88	88	84	88	83	79	88	79	75	87	72	68	85	67	62	83	62	58	79	58	54	73	54	50	69	51	47
				Exposed	88	88	87	88	85	81	88	80	76	88	76	71	88	72	67	88	68	64	88	65	61	85	62	58	78	57	53	72	53	49	67	49	45	63	46	42	60	44	0	57	0	0
		11:12	42.5	Non-Exposed	91	91	91	91	91	91	91	91	91	91	91	91	91	91	89	91	87	83	91	83	79	91	79	75	90	72	68	87	66	62	84	62	58	78	58	54	73	54	50	69	51	47
				Exposed	91	91	87	91	85	81	91	80	76	91	76	71	91	71	67	91	68	64	89	65	61	85	62	58	78	57	53	72	53	49	67	49	45	63	46	42	60	44	0	56	0	0
		12:12	45	Non-Exposed	93	93	93	93	93	93	93	93	93	93	93	93	93	92	88	93	87	83	93	83	79	93	79	75	92	72	68	90	66	62	84	62	58	78	58	53	73	54	50	69	51	47
				Exposed	93	91	87	93	85	81	93	80	76	93	75	71	93	71	67	93	68	64	89	65	61	85	62	58	77	57	53	71	53	49	67	49	45	63	46	42	60	44	0	56	0	0
	D	2:12	9.5	Non-Exposed	80	80	80	80	80	80	80	80	80	80	80	80	80	80	80	80	80	80	79	79	76	78	76	72	76	69	67	75	65	62	70	61	58	66	57	55	62	54	52	59	51	49
				Exposed	80	80	80	80	80	78	80	77	73	80	72	69	80	69	66	77	66	63	74	63	61	71	61	58	65	56	54	61	53	50	57	49	47	54	46	44	51	0	0	48	0	0
		3:12	14.0	Non-Exposed	77	77	77	77	77	77	77	77	77	77	77	77	77	77	77	77	77	77	77	77	75	76	75	72	74	69	66	73	65	62	70	60	58	66	57	55	62	54	51	59	51	49
				Exposed	77	77	77	77	77	77	77	76	73	77	72	69	77	69	66	77	66	63	73	63	61	70	61	58	65	56	54	61	52	50	57	49	47	53	46	44	50	0	0	48	0	0
		4:12	18.4	Non-Exposed	77	77	77	77	77	77	77	77	77	77	77	77	77	77	77	77	77	77	76	76	75	76	75	72	74	69	66	72	64	62	70	60	58	66	57	54	62	54	51	59	51	49
				Exposed	77	77	77	77	77	77	77	76	73	77	72	69	77	69	66	77	66	63	73	63	61	70	61	58	65	56	54	61	52	50	57	49	47	53	46	0	50	0	0	48	0	0
		5:12	22.6	Non-Exposed	78	78		78	78		78	78		78	78		78	78		78	78		77	77		77	77		75	75		73	71		72	66		70	62		68	59		66	55	
				Exposed	78	78		78	78		78	78		78	78		78	76		78	72		77	69		77	66		74	62		69	57		64	54		61	51		57	48		54	45	
		6:12	26.6	Non-Exposed	80	80		80	80		80	80		80	80		80	80		80	80		79	79		78	78		76	76		75	70		73	66		71	62		69	59		66	55	
				Exposed	80	80		80	80		80	80		80	80		80	76		80	72		79	69		78	66		74	61		69	57		64	54		60	50		57	48		54	45	
		7:12	30.3	Non-Exposed	81	81	81	81	81	81	81	81	81	81	81	81	81	81	80	81	80	75	81	75	71	80	72	68	78	66	62	76	61	57	74	56	52	72	53	49	68	49	45	64	47	42
				Exposed	81	81	78	81	77	73	81	73	68	81	69	65	81	65	61	81	62	58	81	59	55	78	57	53	71	52	48	66	48	44	62	45	41	58	43	0	55	0	0	52	0	0
		8:12	33.7	Non-Exposed	83	83	83	83	83	83	83	83	83	83	83	83	83	83	80	83	79	75	83	75	71	82	72	67	80	66	61	78	61	56	76	56	52	71	53	48	67	49	45	64	47	42
				Exposed	83	82	78	83	77	73	83	73	68	83	69	64	83	65	61	83	62	58	81	59	55	77	57	52	71	52	48	66	48	44	62	45	41	58	43	0	55	0	0	52	0	0
		9:12	36.9	Non-Exposed	86	86	86	86	86	86	86	86	86	86	86	84	86	83	79	86	79	75	85	75	71	84	71	67	82	66	61	80	61	56	77	56	52	71	52	48	67	49	45	64	47	42
				Exposed	86	82	78	86	77	73	86	72	68	86	69	64	86	65	61	85	62	58	81	59	55	77	57	52	71	52	48	66	48	44	62	45	41	58	42	0	55	0	0	52	0	0
		10:12	39.8	Non-Exposed	88	88	88	88	88	88	88	88	88	88	88	84	88	83	79	88	79	74	88	75	70	87	71	67	84	65	61	82	60	56	76	56	52	71	52	48	67	49	45	64	47	42
				Exposed	88	82	78	88	77	72	88	72	68	88	68	64	88	65	61	85	62	58	81	59	55	77	57	52	71	52	48	66	48	44	62	45	41	58	42	0	55	0	0	52	0	0
		11:12	42.5	Non-Exposed	91	91	91	91	91	91	91	91	89	91	88	84	91	83	79	91	79	74	90	75	70	89	71	67	87	65	61	82	60	56	76	56	52	71	52	48	67	49	45	64	47	42
				Exposed	91	82	78	91	77	72	91	72	68	91	68	64	89	65	61	84	62	58	80	59	55	77	56	52	70	52	48	66	48	44	62	45	41	58	42	0	55	0	0	52	0	0
		12:12	45	Non-Exposed	93	93	93	93	93	93	93	93	89	93	87	84	93	83	79	93	78	74	93	75	70	92	71	67	89	65	61	82	60	56	76	56	52	71	52	48	67	49	45	64	46	42
				Exposed	93	82	77	93	76	72	93	72	68	93	68	64	89	65	61	84	62	58	80	59	55	77	56	52	70	52	48	66	48	44	62	45	41	58	42	0	55	0	0	52	0	0

Tamarack 2.3 Rail – Hip Flush-Mount on 30 Foot Maximum Mean Roof Height – Landscape – Panel Width = 40 Inches or Less

Ground Snow Load	Exposure Category	Roof Pitch	Roof Angle	Wind Speed (mph)	95			100			105			110			115			120			125			130			140			150			160			170			180			190		
				Roof Area	1	2	3	1	2	3	1	2	3	1	2	3	1	2	3	1	2	3	1	2	3	1	2	3	1	2	3	1	2	3	1	2	3	1	2	3	1	2	3	1	2	3
30	B	2:12	9.5	Non-Exposed	74	74	74	74	74	74	74	74	74	74	74	74	74	74	74	74	74	74	74	74	74	74	74	74	74	74	74	74	74	74	74	74	74	73	73	71	72	70	67	71	66	63
				Exposed	74	74	74	74	74	74	74	74	74	74	74	74	74	74	74	74	74	74	74	74	74	74	74	74	74	74	70	74	68	65	74	64	61	69	60	58	65	56	54	62	53	51
		3:12	14.0	Non-Exposed	71	71	71	71	71	71	71	71	71	71	71	71	71	71	71	71	71	71	71	71	71	71	71	71	71	71	71	71	71	71	71	71	71	71	71	71	70	69	67	69	66	63
				Exposed	71	71	71	71	71	71	71	71	71	71	71	71	71	71	71	71	71	71	71	71	71	71	71	71	71	71	70	71	68	65	71	64	61	69	60	57	65	56	54	62	53	51
		4:12	18.4	Non-Exposed	71	71	71	71	71	71	71	71	71	71	71	71	71	71	71	71	71	71	71	71	71	71	71	71	71	71	71	71	71	71	71	71	71	71	71	71	70	69	66	69	66	63
				Exposed	71	71	71	71	71	71	71	71	71	71	71	71	71	71	71	71	71	71	71	71	71	71	71	71	71	71	70	71	68	65	71	63	61	69	60	57	65	56	54	62	53	51
		5:12	22.6	Non-Exposed	72	72		72	72		72	72		72	72		72	72		72	72		72	72		72	72		72	72		72	72		72	72		72	72		71	71		70	70	
				Exposed	72	72		72	72		72	72		72	72		72	72		72	72		72	72		72	72		72	72		72	72		72	70		72	65		71	62		70	58	
		6:12	26.6	Non-Exposed	74	74		74	74		74	74		74	74		74	74		74	74		74	74		74	74		74	74		74	74		74	74		73	73		72	72		71	71	
				Exposed	74	74		74	74		74	74		74	74		74	74		74	74		74	74		74	74		74	74		74	74		74	69		73	65		72	62		70	58	
		7:12	30.3	Non-Exposed	76	76	76	76	76	76	76	76	76	76	76	76	76	76	76	76	76	76	76	76	76	76	76	76	76	76	76	76	76	76	76	76	72	75	70	66	74	66	62	73	62	58
				Exposed	76	76	76	76	76	76	76	76	76	76	76	76	76	76	76	76	76	76	76	76	76	76	76	72	76	70	66	76	64	60	76	60	56	75	56	52	71	52	48	67	49	45
		8:12	33.7	Non-Exposed	79	79	79	79	79	79	79	79	79	79	79	79	79	79	79	79	79	79	79	79	79	79	79	79	79	79	79	79	79	78	78	76	71	77	70	66	76	66	62	74	62	58
				Exposed	79	79	79	79	79	79	79	79	79	79	79	79	79	79	79	79	79	79	79	79	76	79	76	72	79	70	65	79	64	60	78	60	56	76	56	52	71	52	48	67	49	45
		9:12	36.9	Non-Exposed	81	81	81	81	81	81	81	81	81	81	81	81	81	81	81	81	81	81	81	81	81	81	81	81	81	81	81	81	81	78	81	76	71	79	70	66	78	66	62	77	62	58
				Exposed	81	81	81	81	81	81	81	81	81	81	81	81	81	81	81	81	81	80	81	80	76	81	76	72	81	69	65	81	64	60	81	60	55	76	56	51	71	52	48	67	49	45
		10:12	39.8	Non-Exposed	84	84	84	84	84	84	84	84	84	84	84	84	84	84	84	84	84	84	84	84	84	84	84	84	84	84	84	84	82	78	83	75	71	82	70	66	80	66	61	79	62	57
				Exposed	84	84	84	84	84	84	84	84	84	84	84	84	84	84	84	84	84	80	84	80	75	84	76	71	84	69	65	84	64	60	81	60	55	76	56	51	71	52	48	67	49	45
		11:12	42.5	Non-Exposed	86	86	86	86	86	86	86	86	86	86	86	86	86	86	86	86	86	86	86	86	86	86	86	86	86	86	85	86	82	77	86	75	71	85	70	66	83	65	61	81	62	57
				Exposed	86	86	86	86	86	86	86	86	86	86	86	86	86	86	84	86	84	80	86	80	75	86	76	71	86	69	65	86	64	60	81	59	55	75	55	51	71	52	48	67	49	45
		12:12	45	Non-Exposed	89	89	89	89	89	89	89	89	89	89	89	89	89	89	89	89	89	89	89	89	89	89	89	89	89	89	85	89	81	77	89	75	71	87	70	66	85	65	61	84	61	57
				Exposed	89	89	89	89	89	89	89	89	89	89	89	89	89	88	84	89	84	79	89	79	75	89	76	71	89	69	65	87	64	60	81	59	55	75	55	51	70	52	48	67	49	45
	C	2:12	9.5	Non-Exposed	74	74	74	74	74	74	74	74	74	74	74	74	74	74	74	74	74	74	74	74	74	74	74	74	74	74	73	72	71	68	71	66	63	70	62	60	68	58	56	64	55	53
				Exposed	74	74	74	74	74	74	74	74	74	74	74	74	74	74	72	74	72	69	74	69	66	74	66	64	71	61	59	66	57	55	62	54	51	58	50	48	55	48	46	52	45	0
		3:12	14.0	Non-Exposed	71	71	71	71	71	71	71	71	71	71	71	71	71	71	71	71	71	71	71	71	71	71	71	71	71	71	71	70	70	68	69	66	63	68	62	59	67	58	56	64	55	53
				Exposed	71	71	71	71	71	71	71	71	71	71	71	71	71	71	71	71	71	69	71	69	66	71	66	64	71	61	59	66	57	55	62	54	51	58	50	48	55	47	46	52	45	0
		4:12	18.4	Non-Exposed	71	71	71	71	71	71	71	71	71	71	71	71	71	71	71	71	71	71	71	71	71	71	71	71	71	71	71	70	70	67	69	66	63	68	62	59	67	58	56	64	55	53
				Exposed	71	71	71	71	71	71	71	71	71	71	71	71	71	71	71	71	71	69	71	69	66	71	66	63	71	61	59	66	57	55	62	53	51	58	50	48	55	47	46	52	45	0
		5:12	22.6	Non-Exposed	72	72		72	72		72	72		72	72		72	72		72	72		72	72		72	72		72	72		71	71		70	70		68	68		67	64		66	60	
				Exposed	72	72		72	72		72	72		72	72		72	72		72	72		72	72		72	72		72	67		71	63		70	59		66	55		62	52		59	49	
		6:12	26.6	Non-Exposed	74	74		74	74		74	74		74	74		74	74		74	74		74	74		74	74		74	74		72	72		71	71		70	67		68	64		67	60	
				Exposed	74	74		74	74		74	74		74	74		74	74		74	74		74	74		74	72		74	67		72	62		70	58		66	55		62	52		59	49	
30		7:12	30.3	Non-Exposed	76	76	76	76	76	76	76	76	76	76	76	76	76	76	76	76	76	76	76	76	76	76	76	76	76	73	68	74	67	63	73	62	58	71	58	54	70	54	50	68	51	47
				Exposed	76	76	76	76	76	76	76	76	76	76	76	72	76	72	68	76	69	64	76	65	61	76	63	58	76	57	53	72	53	49	67	49	45	63	46	42	60	44	0	57	0	0
		8:12	33.7	Non-Exposed	79	79	79	79	79	79	79	79	79	79	79	79	79	79	79	79	79	79	79	79	79	79	79	75	78	72	68	76	67	63	75	62	58	73	58	54	71	54	50	69	51	47
				Exposed	79	79	79	79	79	79	79	79	76	79	76	72	79	72	68	79	68	64	79	65	61	79	62	58	78	57	53	72	53	49	67	49	45	63	46	42	60	44	0	57	0	0
		9:12	36.9	Non-Exposed	81	81	81	81	81	81	81	81	81	81	81	81	81	81	81	81	81	81	81	81	79	81	79	75	80	72	68	78	67	63	77	62	58	75	58	54	73	54	50	69	51	47
				Exposed	81	81	81	81	81	81	81	81	76	81	76	71	81	72	68	81	68	64	81	65	61	81	62	58	78	57	53	72	53	49	67	49	45	63	46	42	60	44	0	57	0	0
		10:12	39.8	Non-Exposed	84	84	84	84	84	84	84	84	84	84	84	84	84	84	84	84	84	84	84	83	79	84	79	75	83	72	68	81	67	62	79	62	58	77	58	54	73	54	50	69	51	47
				Exposed	84	84	84	84	84	81	84	80	76	84	76	71	84	72	67	84	68	64	84	65	61	84	62	58	78	57	53	72	53	49	67	49	45	63	46	42	60	44	0	57	0	0
		11:12	42.5	Non-Exposed	86	86	86	86	86	86	86	86	86	86	86	86	86	86	86	86	86	83	86	83	79	86	79	75	85	72	68	83	66	62	81	62	58	78	58	54	73	54	50	69	51	47
				Exposed	86	86	86	86	85	81	86	80	76	86	76	71	86	71	67	86	68	64	86	65	61	85	62	58	78	57	53	72	53	49	67	49	45	63	46	42	60	44	0	56	0	0
		12:12	45	Non-Exposed	89	89	89	89	89	89	89	89	89	89	89	89	89	89	88	89	87	83	89	83	79	89	79	75	88	72	68	86	66	62	84	62	58	78	58	53	73	54	50	69	51	47
				Exposed	89	89	87	89	85	81	89	80	76	89	75	71	89	71	67	89	68	64	89	65	61	85	62	58	77	57	53	71	53	49	67	49	45	63	46	42	60	44	0	56	0	0
	D	2:12	9.5	Non-Exposed	74	74	74	74	74	74	74	74	74	74	74	74	74	74	74	74	74	74	74	74	74	73	73	72	72	69	67	71	65	62	69	61	58	66	57	55	62	54	52	59	51	49
				Exposed	74	74	74	74	74	74	74	74	73	74	72	69	74	69	66	74	66	63	74	63	61	71	61	58	65	56	54	61	53	50	57	49	47	54	46	44	51	0	0	48	0	0
		3:12	14.0	Non-Exposed	71	71	71	71	71	71	71	71	71	71	71	71	71	71	71	71	71	71	71	71	71	71	71	71	70	69	66	69	65	62	67	60	58	66	57	55	62	54	51	59	51	49
				Exposed	71	71	71	71	71	71	71	71	71	71	71	69	71	69	66	71	66	63	71	63	61	70	61	58	65	56	54	61	52	50	57	49	47	53	46	44	50	0	0	48	0	0
		4:12	18.4	Non-Exposed	71	71	71	71	71	71	71	71	71	71	71	71	71	71	71	71	71	71	71	71	71	71	71	71	70	69	66	69	64	62	67	60	58	66	57	54	62	54	51	59	51	49
				Exposed	71	71	71	71	71	71	71	71	71	71	71	69	71	69	66	71	66	63	71	63	61	70	61	58	65	56	54	61	52	50	57	49	47	53	46	0	50	0	0	48	0	0
		5:12	22.6	Non-Exposed	72	72		72	72		72	72		72	72		72	72		72	72		72	72		72	72		71	71		69	69		68	66		67	62		65	59		64	55	
				Exposed	72	72		72	72		72	72		72	72		72	72		72	72		72	69		72	66		71	62		69	57		64	54		61	51		57	48		54	45	
		6:12	26.6	Non-Exposed	74	74		74	74		74	74		74	74		74	74		74	74		74	74		73	73		72	72		71	70		69	66		68	62		66	59		65	55	
				Exposed	74	74		74	74		74	74		74	74		74	74		74	72		74	69		73	66		72	61		69	57		64	54		60	50		57	48		54	45	
		7:12	30.3	Non-Exposed	76	76	76	76	76	76	76	76	76	76	76	76	76	76	76	76	76	75	76	75	71	75	72	68	74	66	62	72	61	57	71	56	52	69	53	49	67	49	45	64	47	42
				Exposed	76	76	76	76	76	73	76	73	68	76	69	65	76	65	61	76	62	58	76	59	55	75	57	53	71	52	48	66	48	44	62	45	41	58	43	0	55	0	0	52	0	0
		8:12	33.7	Non-Exposed	79	79	79	79	79	79	79	79	79	79	79	79	79	79	79	79	79	75	78	75	71	77	72	67	76	66	61	74	61	56	72	56	52	71	53	48	67	49	45	64	47	42
				Exposed	79	79	78	79	77	73	79	73	68	79	69	64	79	65	61	79	62	58	78	59	55	77	57	52	71	52	48	66	48	44	62	45	41	58	43	0	55	0	0	52	0	0
		9:12	36.9	Non-Exposed	81	81	81	81	81	81	81	81	81	81	81	81	81	81	79	81	79	75	81	75	71	80	71	67	78	66	61	76	61	56	74	56	52	71	52	48	67	49	45	64	47	42
				Exposed	81	81	78	81	77	73	81	72	68	81	69	64	81	65	61	81	62	58	81	59	55	77	57	52	71	52	48	66	48	44	62	45	41	58	42	0	55	0	0	52	0	0
		10:12	39.8	Non-Exposed	84	84	84	84	84	84	84	84	84	84	84	84	84	83	79	84	79	74	83	75	70	82	71	67	80	65	61	78	60	56	76	56	52	71	52	48	67	49	45	64	47	42
				Exposed	84	82	78	84	77	72	84	72	68	84	68	64	84	65	61	84	62	58	81	59	55	77	57	52	71	52	48	66	48	44	62	45	41	58	42	0	55	0	0	52	0	0
		11:12	42.5	Non-Exposed	86	86	86	86	86	86	86	86	86	86	86	84	86	83	79	86	79	74	86	75	70	85	71	67	83	65	61	81	60	56	76	56	52	71	52	48	67	49	45	64	47	42
				Exposed	86	82	78	86	77	72	86	72	68	86	68	64	86	65	61	84	62	58	80	59	55	77	56	52	70	52	48	66	48	44	62	45	41	58	42	0	55	0	0	52	0	0
		12:12	45	Non-Exposed	89	89	89	89	89	89	89	89	89	89	87	84	89	83	79	89	78	74	89	75	70	88	71	67	85	65	61	82	60	56	76	56	52	71	52	48	67	49	45	64	46	42
				Exposed	89	82	77	89	76	72	89	72	68	89	68	64	89	65	61	84	62	58	80	59	55	77	56	52	70	52	48	66	48	44	62	45	41	58	42	0	55	0	0	52	0	0

Tamarack 2.3 Rail – Hip Flush-Mount on 30 Foot Maximum Mean Roof Height – Landscape – Panel Width = 40 Inches or Less

Ground Snow Load	Exposure Category	Roof Pitch	Roof Angle	Wind Speed (mph)	95			100			105			110			115			120			125			130			140			150			160			170			180			190		
				Roof Area	1	2	3	1	2	3	1	2	3	1	2	3	1	2	3	1	2	3	1	2	3	1	2	3	1	2	3	1	2	3	1	2	3	1	2	3	1	2	3	1	2	3
35	B	2:12	9.5	Non-Exposed	69	69	69	69	69	69	69	69	69	69	69	69	69	69	69	69	69	69	69	69	69	69	69	69	69	69	69	69	69	69	69	69	69	69	69	69	68	68	67	67	66	63
				Exposed	69	69	69	69	69	69	69	69	69	69	69	69	69	69	69	69	69	69	69	69	69	69	69	69	69	69	69	69	68	65	69	64	61	69	60	58	65	56	54	62	53	51
		3:12	14.0	Non-Exposed	66	66	66	66	66	66	66	66	66	66	66	66	66	66	66	66	66	66	66	66	66	66	66	66	66	66	66	66	66	66	66	66	66	66	66	66	66	66	66	65	65	63
				Exposed	66	66	66	66	66	66	66	66	66	66	66	66	66	66	66	66	66	66	66	66	66	66	66	66	66	66	66	66	66	65	66	64	61	66	60	57	65	56	54	62	53	51
		4:12	18.4	Non-Exposed	66	66	66	66	66	66	66	66	66	66	66	66	66	66	66	66	66	66	66	66	66	66	66	66	66	66	66	66	66	66	66	66	66	66	66	66	66	66	66	65	65	63
				Exposed	66	66	66	66	66	66	66	66	66	66	66	66	66	66	66	66	66	66	66	66	66	66	66	66	66	66	66	66	66	65	66	63	61	66	60	57	65	56	54	62	53	51
		5:12	22.6	Non-Exposed	67	67		67	67		67	67		67	67		67	67		67	67		67	67		67	67		67	67		67	67		67	67		67	67		67	67		66	66	
				Exposed	67	67		67	67		67	67		67	67		67	67		67	67		67	67		67	67		67	67		67	67		67	67		67	65		67	62		66	58	
		6:12	26.6	Non-Exposed	69	69		69	69		69	69		69	69		69	69		69	69		69	69		69	69		69	69		69	69		69	69		69	69		69	69		68	68	
				Exposed	69	69		69	69		69	69		69	69		69	69		69	69		69	69		69	69		69	69		69	69		69	69		69	65		69	62		68	58	
		7:12	30.3	Non-Exposed	71	71	71	71	71	71	71	71	71	71	71	71	71	71	71	71	71	71	71	71	71	71	71	71	71	71	71	71	71	71	71	71	71	70	66	70	66	62	69	62	58
				Exposed	71	71	71	71	71	71	71	71	71	71	71	71	71	71	71	71	71	71	71	71	71	71	71	71	71	70	66	71	64	60	71	60	56	71	56	52	70	52	48	67	49	45
		8:12	33.7	Non-Exposed	74	74	74	74	74	74	74	74	74	74	74	74	74	74	74	74	74	74	74	74	74	74	74	74	74	74	74	74	74	74	74	74	71	73	70	66	72	66	62	71	62	58
				Exposed	74	74	74	74	74	74	74	74	74	74	74	74	74	74	74	74	74	74	74	74	74	74	74	72	74	70	65	74	64	60	74	60	56	73	56	52	71	52	48	67	49	45
		9:12	36.9	Non-Exposed	78	78	78	78	78	78	78	78	78	78	78	78	78	78	78	78	78	78	78	78	78	78	78	78	78	78	78	78	78	78	77	76	71	76	70	66	74	66	62	73	62	58
				Exposed	78	78	78	78	78	78	78	78	78	78	78	78	78	78	78	78	78	78	78	78	76	78	76	72	78	69	65	78	64	60	77	60	55	76	56	51	71	52	48	67	49	45
		10:12	39.8	Non-Exposed	80	80	80	80	80	80	80	80	80	80	80	80	80	80	80	80	80	80	80	80	80	80	80	80	80	80	80	80	80	78	80	75	71	78	70	66	77	66	61	76	62	57
				Exposed	80	80	80	80	80	80	80	80	80	80	80	80	80	80	80	80	80	80	80	80	75	80	76	71	80	69	65	80	64	60	80	60	55	76	56	51	71	52	48	67	49	45
		11:12	42.5	Non-Exposed	83	83	83	83	83	83	83	83	83	83	83	83	83	83	83	83	83	83	83	83	83	83	83	83	83	83	83	83	82	77	82	75	71	81	70	66	79	65	61	78	62	57
				Exposed	83	83	83	83	83	83	83	83	83	83	83	83	83	83	83	83	83	80	83	80	75	83	76	71	83	69	65	83	64	60	81	59	55	75	55	51	71	52	48	67	49	45
		12:12	45	Non-Exposed	86	86	86	86	86	86	86	86	86	86	86	86	86	86	86	86	86	86	86	86	86	86	86	86	86	86	85	86	81	77	85	75	71	84	70	66	82	65	61	80	61	57
				Exposed	86	86	86	86	86	86	86	86	86	86	86	86	86	86	84	86	84	79	86	79	75	86	76	71	86	69	65	86	64	60	81	59	55	75	55	51	70	52	48	67	49	45
	C	2:12	9.5	Non-Exposed	69	69	69	69	69	69	69	69	69	69	69	69	69	69	69	69	69	69	69	69	69	69	69	69	69	69	69	69	69	68	68	66	63	66	62	60	65	58	56	64	55	53
				Exposed	69	69	69	69	69	69	69	69	69	69	69	69	69	69	69	69	69	69	69	69	66	69	66	64	69	61	59	66	57	55	62	54	51	58	50	48	55	48	46	52	45	0
		3:12	14.0	Non-Exposed	66	66	66	66	66	66	66	66	66	66	66	66	66	66	66	66	66	66	66	66	66	66	66	66	66	66	66	66	66	66	66	66	63	65	62	59	63	58	56	62	55	53
				Exposed	66	66	66	66	66	66	66	66	66	66	66	66	66	66	66	66	66	66	66	66	66	66	66	64	66	61	59	66	57	55	62	54	51	58	50	48	55	47	46	52	45	0
		4:12	18.4	Non-Exposed	66	66	66	66	66	66	66	66	66	66	66	66	66	66	66	66	66	66	66	66	66	66	66	66	66	66	66	66	66	66	66	66	63	64	62	59	63	58	56	62	55	53
				Exposed	66	66	66	66	66	66	66	66	66	66	66	66	66	66	66	66	66	66	66	66	66	66	66	63	66	61	59	66	57	55	62	53	51	58	50	48	55	47	46	52	45	0
		5:12	22.6	Non-Exposed	67	67		67	67		67	67		67	67		67	67		67	67		67	67		67	67		67	67		67	67		66	66		65	65		64	64		63	60	
				Exposed	67	67		67	67		67	67		67	67		67	67		67	67		67	67		67	67		67	67		67	63		66	59		65	55		62	52		59	49	
		6:12	26.6	Non-Exposed	69	69		69	69		69	69		69	69		69	69		69	69		69	69		69	69		69	69		69	69		68	68		67	67		65	64		64	60	
				Exposed	69	69		69	69		69	69		69	69		69	69		69	69		69	69		69	69		69	67		69	62		68	58		66	55		62	52		59	49	
35		7:12	30.3	Non-Exposed	71	71	71	71	71	71	71	71	71	71	71	71	71	71	71	71	71	71	71	71	71	71	71	71	71	71	68	70	67	63	69	62	58	68	58	54	67	54	50	65	51	47
				Exposed	71	71	71	71	71	71	71	71	71	71	71	71	71	71	68	71	69	64	71	65	61	71	63	58	71	57	53	70	53	49	67	49	45	63	46	42	60	44	0	57	0	0
		8:12	33.7	Non-Exposed	74	74	74	74	74	74	74	74	74	74	74	74	74	74	74	74	74	74	74	74	74	74	74	74	74	72	68	72	67	63	71	62	58	70	58	54	68	54	50	67	51	47
				Exposed	74	74	74	74	74	74	74	74	74	74	74	72	74	72	68	74	68	64	74	65	61	74	62	58	74	57	53	72	53	49	67	49	45	63	46	42	60	44	0	57	0	0
		9:12	36.9	Non-Exposed	78	78	78	78	78	78	78	78	78	78	78	78	78	78	78	78	78	78	78	78	78	78	78	75	76	72	68	75	67	63	73	62	58	72	58	54	70	54	50	69	51	47
				Exposed	78	78	78	78	78	78	78	78	76	78	76	71	78	72	68	78	68	64	78	65	61	78	62	58	76	57	53	72	53	49	67	49	45	63	46	42	60	44	0	57	0	0
		10:12	39.8	Non-Exposed	80	80	80	80	80	80	80	80	80	80	80	80	80	80	80	80	80	80	80	80	79	80	79	75	79	72	68	77	67	62	76	62	58	74	58	54	72	54	50	69	51	47
				Exposed	80	80	80	80	80	80	80	80	76	80	76	71	80	72	67	80	68	64	80	65	61	80	62	58	78	57	53	72	53	49	67	49	45	63	46	42	60	44	0	57	0	0
		11:12	42.5	Non-Exposed	83	83	83	83	83	83	83	83	83	83	83	83	83	83	83	83	83	83	83	83	79	83	79	75	82	72	68	80	66	62	78	62	58	76	58	54	73	54	50	69	51	47
				Exposed	83	83	83	83	83	81	83	80	76	83	76	71	83	71	67	83	68	64	83	65	61	83	62	58	78	57	53	72	53	49	67	49	45	63	46	42	60	44	0	56	0	0
		12:12	45	Non-Exposed	86	86	86	86	86	86	86	86	86	86	86	86	86	86	86	86	86	83	86	83	79	86	79	75	84	72	68	82	66	62	81	62	58	78	58	53	73	54	50	69	51	47
				Exposed	86	86	86	86	85	81	86	80	76	86	75	71	86	71	67	86	68	64	86	65	61	85	62	58	77	57	53	71	53	49	67	49	45	63	46	42	60	44	0	56	0	0
	D	2:12	9.5	Non-Exposed	69	69	69	69	69	69	69	69	69	69	69	69	69	69	69	69	69	69	69	69	69	69	69	69	68	68	67	67	65	62	66	61	58	65	57	55	62	54	52	59	51	49
				Exposed	69	69	69	69	69	69	69	69	69	69	69	69	69	69	66	69	66	63	69	63	61	69	61	58	65	56	54	61	53	50	57	49	47	54	46	44	51	0	0	48	0	0
		3:12	14.0	Non-Exposed	66	66	66	66	66	66	66	66	66	66	66	66	66	66	66	66	66	66	66	66	66	66	66	66	66	66	66	65	65	62	64	60	58	63	57	55	62	54	51	59	51	49
				Exposed	66	66	66	66	66	66	66	66	66	66	66	66	66	66	66	66	66	63	66	63	61	66	61	58	65	56	54	61	52	50	57	49	47	53	46	44	50	0	0	48	0	0
		4:12	18.4	Non-Exposed	66	66	66	66	66	66	66	66	66	66	66	66	66	66	66	66	66	66	66	66	66	66	66	66	66	66	66	65	64	62	64	60	58	63	57	54	62	54	51	59	51	49
				Exposed	66	66	66	66	66	66	66	66	66	66	66	66	66	66	66	66	66	63	66	63	61	66	61	58	65	56	54	61	52	50	57	49	47	53	46	0	50	0	0	48	0	0
		5:12	22.6	Non-Exposed	67	67		67	67		67	67		67	67		67	67		67	67		67	67		67	67		67	67		66	66		65	65		64	62		63	59		61	55	
				Exposed	67	67		67	67		67	67		67	67		67	67		67	67		67	67		67	66		67	62		66	57		64	54		61	51		57	48		54	45	
		6:12	26.6	Non-Exposed	69	69		69	69		69	69		69	69		69	69		69	69		69	69		69	69		69	69		67	67		66	66		65	62		64	59		62	55	
				Exposed	69	69		69	69		69	69		69	69		69	69		69	69		69	69		69	66		69	61		67	57		64	54		60	50		57	48		54	45	
		7:12	30.3	Non-Exposed	71	71	71	71	71	71	71	71	71	71	71	71	71	71	71	71	71	71	71	71	71	71	71	68	70	66	62	69	61	57	67	56	52	66	53	49	65	49	45	63	47	42
				Exposed	71	71	71	71	71	71	71	71	68	71	69	65	71	65	61	71	62	58	71	59	55	71	57	53	70	52	48	66	48	44	62	45	41	58	43	0	55	0	0	52	0	0
		8:12	33.7	Non-Exposed	74	74	74	74	74	74	74	74	74	74	74	74	74	74	74	74	74	74	74	74	71	74	72	67	72	66	61	71	61	56	69	56	52	68	53	48	66	49	45	64	47	42
				Exposed	74	74	74	74	74	73	74	73	68	74	69	64	74	65	61	74	62	58	74	59	55	74	57	52	71	52	48	66	48	44	62	45	41	58	43	0	55	0	0	52	0	0
		9:12	36.9	Non-Exposed	78	78	78	78	78	78	78	78	78	78	78	78	78	78	78	78	78	75	77	75	71	76	71	67	74	66	61	73	61	56	71	56	52	70	52	48	67	49	45	64	47	42
				Exposed	78	78	78	78	77	73	78	72	68	78	69	64	78	65	61	78	62	58	77	59	55	76	57	52	71	52	48	66	48	44	62	45	41	58	42	0	55	0	0	52	0	0
		10:12	39.8	Non-Exposed	80	80	80	80	80	80	80	80	80	80	80	80	80	80	80	80	80	74	79	75	70	79	71	67	77	65	61	75	60	56	73	56	52	71	52	48	67	49	45	64	47	42
				Exposed	80	80	78	80	77	72	80	72	68	80	68	64	80	65	61	80	62	58	79	59	55	77	57	52	71	52	48	66	48	44	62	45	41	58	42	0	55	0	0	52	0	0
		11:12	42.5	Non-Exposed	83	83	83	83	83	83	83	83	83	83	83	83	83	83	79	83	79	74	82	75	70	81	71	67	79	65	61	77	60	56	76	56	52	71	52	48	67	49	45	64	47	42
				Exposed	83	82	78	83	77	72	83	72	68	83	68	64	83	65	61	83	62	58	80	59	55	77	56	52	70	52	48	66	48	44	62	45	41	58	42	0	55	0	0	52	0	0
		12:12	45	Non-Exposed	86	86	86	86	86	86	86	86	86	86	86	84	86	83	79	86	78	74	85	75	70	84	71	67	82	65	61	80	60	56	76	56	52	71	52	48	67	49	45	64	46	42
				Exposed	86	82	77	86	76	72	86	72	68	86	68	64	86	65	61	84	62	58	80	59	55	77	56	52	70	52	48	66	48	44	62	45	41	58	42	0	55	0	0	52	0	0

Tamarack 2.3 Rail – Hip Flush-Mount on 30 Foot Maximum Mean Roof Height – Landscape – Panel Width = 40 Inches or Less

Ground Snow Load	Exposure Category	Roof Pitch	Roof Angle	Wind Speed (mph)	95			100			105			110			115			120			125			130			140			150			160			170			180			190		
				Roof Area	1	2	3	1	2	3	1	2	3	1	2	3	1	2	3	1	2	3	1	2	3	1	2	3	1	2	3	1	2	3	1	2	3	1	2	3	1	2	3	1	2	3
40	B	2:12	9.5	Non-Exposed	64	64	64	64	64	64	64	64	64	64	64	64	64	64	64	64	64	64	64	64	64	64	64	64	64	64	64	64	64	64	64	64	64	64	64	64	64	64	64	64	64	63
				Exposed	64	64	64	64	64	64	64	64	64	64	64	64	64	64	64	64	64	64	64	64	64	64	64	64	64	64	64	64	64	61	64	60	58	64	56	54	62	53	51
		3:12	14.0	Non-Exposed	62	62	62	62	62	62	62	62	62	62	62	62	62	62	62	62	62	62	62	62	62	62	62	62	62	62	62	62	62	62	62	62	62	62	62	62	62	62	62	62	62	62
				Exposed	62	62	62	62	62	62	62	62	62	62	62	62	62	62	62	62	62	62	62	62	62	62	62	62	62	62	62	62	62	61	62	60	57	62	56	54	62	53	51
		4:12	18.4	Non-Exposed	62	62	62	62	62	62	62	62	62	62	62	62	62	62	62	62	62	62	62	62	62	62	62	62	62	62	62	62	62	62	62	62	62	62	62	62	62	62	62	62	62	62
				Exposed	62	62	62	62	62	62	62	62	62	62	62	62	62	62	62	62	62	62	62	62	62	62	62	62	62	62	62	62	62	61	62	60	57	62	56	54	62	53	51
		5:12	22.6	Non-Exposed	63	63		63	63		63	63		63	63		63	63		63	63		63	63		63	63		63	63		63	63		63	63		63	63		63	63		63	63	
				Exposed	63	63		63	63		63	63		63	63		63	63		63	63		63	63		63	63		63	63		63	63		63	63		63	63		63	62		63	58	
		6:12	26.6	Non-Exposed	65	65		65	65		65	65		65	65		65	65		65	65		65	65		65	65		65	65		65	65		65	65		65	65		65	65		65	65	
				Exposed	65	65		65	65		65	65		65	65		65	65		65	65		65	65		65	65		65	65		65	65		65	65		65	65		65	62		65	58	
		7:12	30.3	Non-Exposed	67	67	67	67	67	67	67	67	67	67	67	67	67	67	67	67	67	67	67	67	67	67	67	67	67	67	67	67	67	66	67	66	62	67	66	62	66	62	58	66	62	58
				Exposed	67	67	67	67	67	67	67	67	67	67	67	67	67	67	67	67	67	64	67	65	61	67	64	60	67	60	56	67	56	52	67	52	48	66	49	45	62	49	45
		8:12	33.7	Non-Exposed	70	70	70	70	70	70	70	70	70	70	70	70	70	70	70	70	70	70	70	70	70	70	70	70	70	70	70	70	70	70	70	70	70	70	70	66	69	66	62	68	62	58
				Exposed	70	70	70	70	70	70	70	70	70	70	70	70	70	70	70	70	70	70	70	70	70	70	70	70	70	70	65	70	64	60	70	60	56	70	56	52	69	52	48	67	49	45
		9:12	36.9	Non-Exposed	73	73	73	73	73	73	73	73	73	73	73	73	73	73	73	73	73	73	73	73	73	73	73	73	73	73	73	73	73	73	73	73	71	72	70	66	71	66	62	70	62	58
				Exposed	73	73	73	73	73	73	73	73	73	73	73	73	73	73	73	73	73	73	73	73	72	73	69	65	73	64	60	73	60	55	72	56	51	71	52	48	67	49	45
		10:12	39.8	Non-Exposed	77	77	77	77	77	77	77	77	77	77	77	77	77	77	77	77	77	77	77	77	77	77	77	77	77	77	77	77	77	77	76	75	71	75	70	66	74	66	61	73	62	57
				Exposed	77	77	77	77	77	77	77	77	77	77	77	77	77	77	77	77	77	77	77	77	75	77	76	71	77	69	65	77	64	60	76	60	55	75	56	51	71	52	48	67	49	45
		11:12	42.5	Non-Exposed	80	80	80	80	80	80	80	80	80	80	80	80	80	80	80	80	80	80	80	80	80	80	80	80	80	80	80	80	80	77	79	75	71	78	70	66	76	65	61	75	62	57
				Exposed	80	80	80	80	80	80	80	80	80	80	80	80	80	80	80	80	80	80	80	80	75	80	76	71	80	69	65	80	64	60	79	59	55	75	55	51	71	52	48	67	49	45
		12:12	45	Non-Exposed	82	82	82	82	82	82	82	82	82	82	82	82	82	82	82	82	82	82	82	82	82	82	82	82	82	82	82	82	81	77	82	75	71	81	70	66	79	65	61	78	61	57
				Exposed	82	82	82	82	82	82	82	82	82	82	82	82	82	82	82	82	82	79	82	79	75	82	76	71	82	69	65	82	64	60	81	59	55	75	55	51	70	52	48	67	49	45
	C	2:12	9.5	Non-Exposed	64	64	64	64	64	64	64	64	64	64	64	64	64	64	64	64	64	64	64	64	64	64	64	64	64	64	64	64	64	63	64	62	60	63	58	56	62	55	53			
				Exposed	64	64	64	64	64	64	64	64	64	64	64	64	64	64	64	64	64	64	64	64	64	64	64	64	64	61	59	64	57	55	62	54	51	58	50	48	55	48	46	52	45	0
		3:12	14.0	Non-Exposed	62	62	62	62	62	62	62	62	62	62	62	62	62	62	62	62	62	62	62	62	62	62	62	62	62	62	62	62	62	62	62	62	62	62	62	59	61	58	56	60	55	53
				Exposed	62	62	62	62	62	62	62	62	62	62	62	62	62	62	62	62	62	62	62	62	62	62	62	62	62	61	59	62	57	55	62	54	51	58	50	48	55	47	46	52	45	0
		4:12	18.4	Non-Exposed	62	62	62	62	62	62	62	62	62	62	62	62	62	62	62	62	62	62	62	62	62	62	62	62	62	62	62	62	62	62	62	62	62	62	62	59	61	58	56	60	55	53
				Exposed	62	62	62	62	62	62	62	62	62	62	62	62	62	62	62	62	62	62	62	62	62	62	62	62	62	61	59	62	57	55	62	53	51	58	50	48	55	47	46	52	45	0
		5:12	22.6	Non-Exposed	63	63		63	63		63	63		63	63		63	63		63	63		63	63		63	63		63	63		63	63		63	63		63	63		62	62		61	60	
				Exposed	63	63		63	63		63	63		63	63		63	63		63	63		63	63		63	63		63	63		63	63		63	59		63	55		62	52		59	49	
		6:12	26.6	Non-Exposed	65	65		65	65		65	65		65	65		65	65		65	65		65	65		65	65		65	65		65	65		65	65		64	64		63	63		62	60	
				Exposed	65	65		65	65		65	65		65	65		65	65		65	65		65	65		65	65		65	65		65	62		65	58		64	55		62	52		59	49	
		7:12	30.3	Non-Exposed	67	67	67	67	67	67	67	67	67	67	67	67	67	67	67	67	67	67	67	67	67	67	67	67	67	67	67	67	67	63	66	62	58	65	58	54	64	54	50	63	51	47
				Exposed	67	67	67	67	67	67	67	67	67	67	67	67	67	67	67	67	67	64	67	65	61	67	63	58	67	57	53	67	53	49	66	49	45	63	46	42	60	44	0	57	0	0
		8:12	33.7	Non-Exposed	70	70	70	70	70	70	70	70	70	70	70	70	70	70	70	70	70	70	70	70	70	70	70	70	70	70	68	69	67	63	68	62	58	67	58	54	66	54	50	65	51	47
				Exposed	70	70	70	70	70	70	70	70	70	70	70	70	70	70	68	70	68	64	70	65	61	70	62	58	70	57	53	69	53	49	67	49	45	63	46	42	60	44	0	57	0	0
		9:12	36.9	Non-Exposed	73	73	73	73	73	73	73	73	73	73	73	73	73	73	73	73	73	73	73	73	73	73	73	73	73	72	68	72	67	63	70	62	58	69	58	54	68	54	50	66	51	47
				Exposed	73	73	73	73	73	73	73	73	73	73	73	71	73	72	68	73	68	64	73	65	61	73	62	58	73	57	53	72	53	49	67	49	45	63	46	42	60	44	0	57	0	0
		10:12	39.8	Non-Exposed	77	77	77	77	77	77	77	77	77	77	77	77	77	77	77	77	77	77	77	77	77	77	77	75	76	72	68	74	67	62	73	62	58	71	58	54	70	54	50	68	51	47
				Exposed	77	77	77	77	77	77	77	77	76	77	76	71	77	72	67	77	68	64	77	65	61	77	62	58	76	57	53	72	53	49	67	49	45	63	46	42	60	44	0	57	0	0
		11:12	42.5	Non-Exposed	80	80	80	80	80	80	80	80	80	80	80	80	80	80	80	80	80	80	80	80	79	80	79	75	78	72	68	77	66	62	75	62	58	74	58	54	72	54	50	69	51	47
				Exposed	80	80	80	80	80	80	80	80	76	80	76	71	80	71	67	80	68	64	80	65	61	80	62	58	78	57	53	72	53	49	67	49	45	63	46	42	60	44	0	56	0	0
		12:12	45	Non-Exposed	82	82	82	82	82	82	82	82	82	82	82	82	82	82	82	82	82	82	82	82	79	82	79	75	81	72	68	79	66	62	78	62	58	76	58	53	73	54	50	69	51	47
				Exposed	82	82	82	82	82	81	82	80	76	82	75	71	82	71	67	82	68	64	82	65	61	82	62	58	77	57	53	71	53	49	67	49	45	63	46	42	60	44	0	56	0	0
	D	2:12	9.5	Non-Exposed	64	64	64	64	64	64	64	64	64	64	64	64	64	64	64	64	64	64	64	64	64	64	64	64	64	64	64	64	64	62	63	61	58	62	57	55	61	54	52	59	51	49
				Exposed	64	64	64	64	64	64	64	64	64	64	64	64	64	64	64	64	64	63	64	63	61	64	61	58	64	56	54	61	53	50	57	49	47	54	46	44	51	0	0	48	0	0
		3:12	14.0	Non-Exposed	62	62	62	62	62	62	62	62	62	62	62	62	62	62	62	62	62	62	62	62	62	62	62	62	62	62	62	62	62	62	61	60	58	60	57	55	59	54	51	58	51	49
				Exposed	62	62	62	62	62	62	62	62	62	62	62	62	62	62	62	62	62	62	62	62	61	62	61	58	62	56	54	61	52	50	57	49	47	53	46	44	50	0	0	48	0	0
		4:12	18.4	Non-Exposed	62	62	62	62	62	62	62	62	62	62	62	62	62	62	62	62	62	62	62	62	62	62	62	62	62	62	62	62	62	62	61	60	58	60	57	54	59	54	51	58	51	49
				Exposed	62	62	62	62	62	62	62	62	62	62	62	62	62	62	62	62	62	62	62	62	61	62	61	58	62	56	54	61	52	50	57	49	47	53	46	0	50	0	0	48	0	0
		5:12	22.6	Non-Exposed	63	63		63	63		63	63		63	63		63	63		63	63		63	63		63	63		63	63		63	63		62	62		61	61		60	59		59	55	
				Exposed	63	63		63	63		63	63		63	63		63	63		63	63		63	63		63	63		63	62		63	57		62	54		61	51		57	48		54	45	
		6:12	26.6	Non-Exposed	65	65		65	65		65	65		65	65		65	65		65	65		65	65		65	65		65	65		64	64		63	63		62	62		61	59		60	55	
				Exposed	65	65		65	65		65	65		65	65		65	65		65	65		65	65		65	65		65	61		64	57		63	54		60	50		57	48		54	45	
		7:12	30.3	Non-Exposed	67	67	67	67	67	67	67	67	67	67	67	67	67	67	67	67	67	67	67	67	67	67	67	67	67	66	62	66	61	57	65	56	52	63	53	49	62	49	45	61	47	42
				Exposed	67	67	67	67	67	67	67	67	67	67	67	65	67	65	61	67	62	58	67	59	55	67	57	53	67	52	48	66	48	44	62	45	41	58	43	0	55	0	0	52	0	0
		8:12	33.7	Non-Exposed	70	70	70	70	70	70	70	70	70	70	70	70	70	70	70	70	70	70	70	70	70	70	70	67	69	66	61	68	61	56	67	56	52	65	53	48	64	49	45	62	47	42
				Exposed	70	70	70	70	70	70	70	70	68	70	69	64	70	65	61	70	62	58	70	59	55	70	57	52	69	52	48	66	48	44	62	45	41	58	43	0	55	0	0	52	0	0
		9:12	36.9	Non-Exposed	73	73	73	73	73	73	73	73	73	73	73	73	73	73	73	73	73	73	73	73	71	73	71	67	71	66	61	70	61	56	69	56	52	67	52	48	66	49	45	64	47	42
				Exposed	73	73	73	73	73	73	73	72	68	73	69	64	73	65	61	73	62	58	73	59	55	73	57	52	71	52	48	66	48	44	62	45	41	58	42	0	55	0	0	52	0	0
		10:12	39.8	Non-Exposed	77	77	77	77	77	77	77	77	77	77	77	77	77	77	77	77	77	74	76	75	70	75	71	67	74	65	61	72	60	56	71	56	52	69	52	48	67	49	45	64	47	42
				Exposed	77	77	77	77	77	72	77	72	68	77	68	64	77	65	61	77	62	58	76	59	55	75	57	52	71	52	48	66	48	44	62	45	41	58	42	0	55	0	0	52	0	0
		11:12	42.5	Non-Exposed	80	80	80	80	80	80	80	80	80	80	80	80	80	80	79	80	79	74	79	75	70	78	71	67	76	65	61	75	60	56	73	56	52	71	52	48	67	49	45	64	47	42
				Exposed	80	80	78	80	77	72	80	72	68	80	68	64	80	65	61	80	62	58	79	59	55	77	56	52	70	52	48	66	48	44	62	45	41	58	42	0	55	0	0	52	0	0
		12:12	45	Non-Exposed	82	82	82	82	82	82	82	82	82	82	82	82	82	82	79	82	78	74	82	75	70	81	71	67	79	65	61	77	60	56	75	56	52	71	52	48	67	49	45	64	46	42
				Exposed	82	82	77	82	76	72	82	72	68	82	68	64	82	65	61	82	62	58	80	59	55	77	56	52	70	52	48	66	48	44	62	45	41	58	42	0	55	0	0	52	0	0

Tamarack 2.3 Rail – Hip Flush-Mount on 30 Foot Maximum Mean Roof Height – Landscape – Panel Width = 40 Inches or Less

Ground Snow Load	Exposure Category	Roof Pitch	Roof Angle	Wind Speed (mph)	95			100			105			110			115			120			125			130			140			150			160			170			180			190		
				Roof Area	1	2	3	1	2	3	1	2	3	1	2	3	1	2	3	1	2	3	1	2	3	1	2	3	1	2	3	1	2	3	1	2	3	1	2	3	1	2	3	1	2	3
45	B	2:12	9.5	Non-Exposed	61	61	61	61	61	61	61	61	61	61	61	61	61	61	61	61	61	61	61	61	61	61	61	61	61	61	61	61	61	61	61	61	61	61	61	61	61	61	61	61	61	61
				Exposed	61	61	61	61	61	61	61	61	61	61	61	61	61	61	61	61	61	61	61	61	61	61	61	61	61	61	61	61	61	61	61	61	61	61	60	58	61	56	54	61	53	51
		3:12	14.0	Non-Exposed	58	58	58	58	58	58	58	58	58	58	58	58	58	58	58	58	58	58	58	58	58	58	58	58	58	58	58	58	58	58	58	58	58	58	58	58	58	58	58	58	58	58
				Exposed	58	58	58	58	58	58	58	58	58	58	58	58	58	58	58	58	58	58	58	58	58	58	58	58	58	58	58	58	58	58	58	58	58	58	58	57	58	56	54	58	53	51
		4:12	18.4	Non-Exposed	59	59	59	59	59	59	59	59	59	59	59	59	59	59	59	59	59	59	59	59	59	59	59	59	59	59	59	59	59	59	59	59	59	59	59	59	59	59	59	59	59	59
				Exposed	59	59	59	59	59	59	59	59	59	59	59	59	59	59	59	59	59	59	59	59	59	59	59	59	59	59	59	59	59	59	59	59	59	59	59	57	59	56	54	59	53	51
		5:12	22.6	Non-Exposed	60	60		60	60		60	60		60	60		60	60		60	60		60	60		60	60		60	60		60	60		60	60		60	60		60	60		60	60	
				Exposed	60	60		60	60		60	60		60	60		60	60		60	60		60	60		60	60		60	60		60	60		60	60		60	60		60	60		60	58	
		6:12	26.6	Non-Exposed	61	61		61	61		61	61		61	61		61	61		61	61		61	61		61	61		61	61		61	61		61	61		61	61		61	61		61	61	
				Exposed	61	61		61	61		61	61		61	61		61	61		61	61		61	61		61	61		61	61		61	61		61	61		61	61		61	61		61	58	
		7:12	30.3	Non-Exposed	64	64	64	64	64	64	64	64	64	64	64	64	64	64	64	64	64	64	64	64	64	64	64	64	64	64	64	64	64	64	64	64	64	64	64	64	64	64	62	64	62	58
				Exposed	64	64	64	64	64	64	64	64	64	64	64	64	64	64	64	64	64	64	64	64	64	64	64	64	64	64	64	64	64	60	64	60	56	64	56	52	64	52	48	64	49	45
		8:12	33.7	Non-Exposed	66	66	66	66	66	66	66	66	66	66	66	66	66	66	66	66	66	66	66	66	66	66	66	66	66	66	66	66	66	66	66	66	66	66	66	66	66	66	62	66	62	58
				Exposed	66	66	66	66	66	66	66	66	66	66	66	66	66	66	66	66	66	66	66	66	66	66	66	66	66	66	65	66	64	60	66	60	56	66	56	52	66	52	48	66	49	45
		9:12	36.9	Non-Exposed	69	69	69	69	69	69	69	69	69	69	69	69	69	69	69	69	69	69	69	69	69	69	69	69	69	69	69	69	69	69	69	69	69	69	69	66	69	66	62	68	62	58
				Exposed	69	69	69	69	69	69	69	69	69	69	69	69	69	69	69	69	69	69	69	69	69	69	69	69	69	69	65	69	64	60	69	60	55	69	56	51	69	52	48	67	49	45
		10:12	39.8	Non-Exposed	73	73	73	73	73	73	73	73	73	73	73	73	73	73	73	73	73	73	73	73	73	73	73	73	73	73	73	73	73	73	73	73	71	72	70	66	71	66	61	70	62	57
				Exposed	73	73	73	73	73	73	73	73	73	73	73	73	73	73	73	73	73	73	73	73	73	73	73	71	73	69	65	73	64	60	73	60	55	72	56	51	71	52	48	67	49	45
		11:12	42.5	Non-Exposed	77	77	77	77	77	77	77	77	77	77	77	77	77	77	77	77	77	77	77	77	77	77	77	77	77	77	77	77	77	77	76	75	71	75	70	66	74	65	61	73	62	57
				Exposed	77	77	77	77	77	77	77	77	77	77	77	77	77	77	77	77	77	77	77	77	75	77	76	71	77	69	65	77	64	60	76	59	55	75	55	51	71	52	48	67	49	45
		12:12	45	Non-Exposed	80	80	80	80	80	80	80	80	80	80	80	80	80	80	80	80	80	80	80	80	80	80	80	80	80	80	80	80	80	77	79	75	71	78	70	66	76	65	61	75	61	57
				Exposed	80	80	80	80	80	80	80	80	80	80	80	80	80	80	80	80	80	79	80	79	75	80	76	71	80	69	65	80	64	60	79	59	55	75	55	51	70	52	48	67	49	45
	C	2:12	9.5	Non-Exposed	61	61	61	61	61	61	61	61	61	61	61	61	61	61	61	61	61	61	61	61	61	61	61	61	61	61	61	61	61	61	61	61	61	61	61	60	60	58	56	59	55	53
				Exposed	61	61	61	61	61	61	61	61	61	61	61	61	61	61	61	61	61	61	61	61	61	61	61	61	61	61	59	61	57	55	61	54	51	58	50	48	55	48	46	52	45	0
		3:12	14.0	Non-Exposed	58	58	58	58	58	58	58	58	58	58	58	58	58	58	58	58	58	58	58	58	58	58	58	58	58	58	58	58	58	58	58	58	58	58	58	58	58	58	56	58	55	53
				Exposed	58	58	58	58	58	58	58	58	58	58	58	58	58	58	58	58	58	58	58	58	58	58	58	58	58	58	58	58	57	55	58	54	51	58	50	48	55	47	46	52	45	0
		4:12	18.4	Non-Exposed	59	59	59	59	59	59	59	59	59	59	59	59	59	59	59	59	59	59	59	59	59	59	59	59	59	59	59	59	59	59	59	59	59	59	59	59	58	58	56	58	55	53
				Exposed	59	59	59	59	59	59	59	59	59	59	59	59	59	59	59	59	59	59	59	59	59	59	59	59	59	59	59	59	57	55	59	53	51	58	50	48	55	47	46	52	45	0
		5:12	22.6	Non-Exposed	60	60		60	60		60	60		60	60		60	60		60	60		60	60		60	60		60	60		60	60		60	60		60	60		59	59		58	58	
				Exposed	60	60		60	60		60	60		60	60		60	60		60	60		60	60		60	60		60	60		60	59		60	55		59	52		58	49				
		6:12	26.6	Non-Exposed	61	61		61	61		61	61		61	61		61	61		61	61		61	61		61	61		61	61		61	61		61	61		61	61		60	60		60	60	
				Exposed	61	61		61	61		61	61		61	61		61	61		61	61		61	61		61	61		61	61		61	61		61	58		61	55		60	52		59	49	
45		7:12	30.3	Non-Exposed	64	64	64	64	64	64	64	64	64	64	64	64	64	64	64	64	64	64	64	64	64	64	64	64	64	64	64	64	64	63	64	62	58	63	58	54	62	54	50	61	51	47
				Exposed	64	64	64	64	64	64	64	64	64	64	64	64	64	64	64	64	64	64	64	64	61	64	63	58	64	57	53	64	53	49	64	49	45	63	46	42	60	44	0	57	0	0
		8:12	33.7	Non-Exposed	66	66	66	66	66	66	66	66	66	66	66	66	66	66	66	66	66	66	66	66	66	66	66	66	66	66	66	66	66	63	66	62	58	65	58	54	63	54	50	62	51	47
				Exposed	66	66	66	66	66	66	66	66	66	66	66	66	66	66	66	66	66	64	66	65	61	66	62	58	66	57	53	66	53	49	66	49	45	63	46	42	60	44	0	57	0	0
		9:12	36.9	Non-Exposed	69	69	69	69	69	69	69	69	69	69	69	69	69	69	69	69	69	69	69	69	69	69	69	69	69	69	68	69	67	63	68	62	58	67	58	54	65	54	50	64	51	47
				Exposed	69	69	69	69	69	69	69	69	69	69	69	69	69	69	68	69	68	64	69	65	61	69	62	58	69	57	53	69	53	49	67	49	45	63	46	42	60	44	0	57	0	0
		10:12	39.8	Non-Exposed	73	73	73	73	73	73	73	73	73	73	73	73	73	73	73	73	73	73	73	73	73	73	73	73	73	72	68	71	67	62	70	62	58	69	58	54	67	54	50	66	51	47
				Exposed	73	73	73	73	73	73	73	73	73	73	73	71	73	72	67	73	68	64	73	65	61	73	62	58	73	57	53	71	53	49	67	49	45	63	46	42	60	44	0	57	0	0
		11:12	42.5	Non-Exposed	77	77	77	77	77	77	77	77	77	77	77	77	77	77	77	77	77	77	77	77	77	77	77	75	75	72	68	74	66	62	73	62	58	71	58	54	70	54	50	68	51	47
				Exposed	77	77	77	77	77	77	77	77	76	77	76	71	77	71	67	77	68	64	77	65	61	77	62	58	75	57	53	72	53	49	67	49	45	63	46	42	60	44	0	56	0	0
		12:12	45	Non-Exposed	80	80	80	80	80	80	80	80	80	80	80	80	80	80	80	80	80	80	80	80	79	80	79	75	78	72	68	77	66	62	75	62	58	74	58	53	72	54	50	69	51	47
				Exposed	80	80	80	80	80	80	80	80	76	80	75	71	80	71	67	80	68	64	80	65	61	80	62	58	77	57	53	71	53	49	67	49	45	63	46	42	60	44	0	56	0	0
	D	2:12	9.5	Non-Exposed	61	61	61	61	61	61	61	61	61	61	61	61	61	61	61	61	61	61	61	61	61	61	61	61	61	61	61	61	61	61	61	61	58	60	57	55	59	54	52	58	51	49
				Exposed	61	61	61	61	61	61	61	61	61	61	61	61	61	61	61	61	61	61	61	61	61	61	61	58	61	56	54	61	53	50	57	49	47	54	46	44	51	0	0	48	0	0
		3:12	14.0	Non-Exposed	58	58	58	58	58	58	58	58	58	58	58	58	58	58	58	58	58	58	58	58	58	58	58	58	58	58	58	58	58	58	58	58	58	58	57	55	57	54	51	56	51	49
				Exposed	58	58	58	58	58	58	58	58	58	58	58	58	58	58	58	58	58	58	58	58	58	58	58	58	58	56	54	58	52	50	57	49	47	53	46	44	50	0	0	48	0	0
		4:12	18.4	Non-Exposed	59	59	59	59	59	59	59	59	59	59	59	59	59	59	59	59	59	59	59	59	59	59	59	59	59	59	59	59	59	59	59	59	58	58	57	54	57	54	51	56	51	49
				Exposed	59	59	59	59	59	59	59	59	59	59	59	59	59	59	59	59	59	59	59	59	59	59	59	58	59	56	54	59	52	50	57	49	47	53	46	0	50	0	0	48	0	0
		5:12	22.6	Non-Exposed	60	60		60	60		60	60		60	60		60	60		60	60		60	60		60	60		60	60		60	60		60	60		59	59		58	58		57	55	
				Exposed	60	60		60	60		60	60		60	60		60	60		60	60		60	60		60	60		60	60		60	57		60	54		59	51		57	48		54	45	
		6:12	26.6	Non-Exposed	61	61		61	61		61	61		61	61		61	61		61	61		61	61		61	61		61	61		61	61		61	61		60	60		59	59		58	55	
				Exposed	61	61		61	61		61	61		61	61		61	61		61	61		61	61		61	61		61	61		61	57		61	54		60	50		57	48		54	45	
		7:12	30.3	Non-Exposed	64	64	64	64	64	64	64	64	64	64	64	64	64	64	64	64	64	64	64	64	64	64	64	64	64	64	62	63	61	57	62	56	52	61	53	49	60	49	45	59	47	42
				Exposed	64	64	64	64	64	64	64	64	64	64	64	64	64	64	61	64	62	58	64	59	55	64	57	53	64	52	48	63	48	44	62	45	41	58	43	0	55	0	0	52	0	0
		8:12	33.7	Non-Exposed	66	66	66	66	66	66	66	66	66	66	66	66	66	66	66	66	66	66	66	66	66	66	66	66	66	66	61	65	61	56	64	56	52	63	53	48	62	49	45	60	47	42
				Exposed	66	66	66	66	66	66	66	66	66	66	66	64	66	65	61	66	62	58	66	59	55	66	57	52	66	52	48	65	48	44	62	45	41	58	43	0	55	0	0	52	0	0
		9:12	36.9	Non-Exposed	69	69	69	69	69	69	69	69	69	69	69	69	69	69	69	69	69	69	69	69	69	69	69	67	69	66	61	67	61	56	66	56	52	65	52	48	63	49	45	62	47	42
				Exposed	69	69	69	69	69	69	69	69	68	69	69	64	69	65	61	69	62	58	69	59	55	69	57	52	69	52	48	66	48	44	62	45	41	58	42	0	55	0	0	52	0	0
		10:12	39.8	Non-Exposed	73	73	73	73	73	73	73	73	73	73	73	73	73	73	73	73	73	73	73	73	70	72	71	67	71	65	61	70	60	56	68	56	52	67	52	48	65	49	45	64	47	42
				Exposed	73	73	73	73	73	72	73	72	68	73	68	64	73	65	61	73	62	58	73	59	55	72	57	52	71	52	48	66	48	44	62	45	41	58	42	0	55	0	0	52	0	0
		11:12	42.5	Non-Exposed	77	77	77	77	77	77	77	77	77	77	77	77	77	77	77	77	77	74	76	75	70	75	71	67	74	65	61	72	60	56	71	56	52	69	52	48	67	49	45	64	47	42
				Exposed	77	77	77	77	77	72	77	72	68	77	68	64	77	65	61	77	62	58	76	59	55	75	56	52	70	52	48	66	48	44	62	45	41	58	42	0	55	0	0	52	0	0
		12:12	45	Non-Exposed	80	80	80	80	80	80	80	80	80	80	80	80	80	80	79	80	78	74	79	75	70	78	71	67	76	65	61	75	60	56	73	56	52	71	52	48	67	49	45	64	46	42
				Exposed	80	80	77	80	76	72	80	72	68	80	68	64	80	65	61	80	62	58	79	59	55	77	56	52	70	52	48	66	48	44	62	45	41	58	42	0	55	0	0	52	0	0

Tamarack 2.3 Rail – Hip Flush-Mount on 30 Foot Maximum Mean Roof Height – Landscape – Panel Width = 40 Inches or Less

Ground Snow Load	Exposure Category	Roof Pitch	Roof Angle	Wind Speed (mph)	95			100			105			110			115			120			125			130			140			150			160			170			180			190		
				Roof Area	1	2	3	1	2	3	1	2	3	1	2	3	1	2	3	1	2	3	1	2	3	1	2	3	1	2	3	1	2	3	1	2	3	1	2	3	1	2	3	1	2	3
50	B	2:12	9.5	Non-Exposed	58	58	58	58	58	58	58	58	58	58	58	58	58	58	58	58	58	58	58	58	58	58	58	58	58	58	58	58	58	58	58	58	58	58	58	58	58	58	58	58	58	58
				Exposed	58	58	58	58	58	58	58	58	58	58	58	58	58	58	58	58	58	58	58	58	58	58	58	58	58	58	58	58	58	58	58	58	58	58	58	58	58	56	54	58	53	51
		3:12	14.0	Non-Exposed	56	56	56	56	56	56	56	56	56	56	56	56	56	56	56	56	56	56	56	56	56	56	56	56	56	56	56	56	56	56	56	56	56	56	56	56	56	56	56	56	56	56
				Exposed	56	56	56	56	56	56	56	56	56	56	56	56	56	56	56	56	56	56	56	56	56	56	56	56	56	56	56	56	56	56	56	56	56	56	56	56	56	56	54	56	53	51
		4:12	18.4	Non-Exposed	56	56	56	56	56	56	56	56	56	56	56	56	56	56	56	56	56	56	56	56	56	56	56	56	56	56	56	56	56	56	56	56	56	56	56	56	56	56	56	56	56	56
				Exposed	56	56	56	56	56	56	56	56	56	56	56	56	56	56	56	56	56	56	56	56	56	56	56	56	56	56	56	56	56	56	56	56	56	56	56	56	56	56	54	56	53	51
		5:12	22.6	Non-Exposed	57	57		57	57		57	57		57	57		57	57		57	57		57	57		57	57		57	57		57	57		57	57		57	57		57	57		57	57	
				Exposed	57	57		57	57		57	57		57	57		57	57		57	57		57	57		57	57		57	57		57	57		57	57		57	57		57	57		57	57	
		6:12	26.6	Non-Exposed	59	59		59	59		59	59		59	59		59	59		59	59		59	59		59	59		59	59		59	59		59	59		59	59		59	59		59	59	
				Exposed	59	59		59	59		59	59		59	59		59	59		59	59		59	59		59	59		59	59		59	59		59	59		59	59		59	59		59	58	
		7:12	30.3	Non-Exposed	61	61	61	61	61	61	61	61	61	61	61	61	61	61	61	61	61	61	61	61	61	61	61	61	61	61	61	61	61	61	61	61	61	61	61	61	61	61	61	61	61	58
				Exposed	61	61	61	61	61	61	61	61	61	61	61	61	61	61	61	61	61	61	61	61	61	61	61	61	61	61	61	61	61	60	61	60	56	61	56	52	61	52	48	61	49	45
		8:12	33.7	Non-Exposed	63	63	63	63	63	63	63	63	63	63	63	63	63	63	63	63	63	63	63	63	63	63	63	63	63	63	63	63	63	63	63	63	63	63	63	63	63	63	62	63	62	58
				Exposed	63	63	63	63	63	63	63	63	63	63	63	63	63	63	63	63	63	63	63	63	63	63	63	63	63	63	63	63	63	60	63	60	56	63	56	52	63	52	48	63	49	45
		9:12	36.9	Non-Exposed	66	66	66	66	66	66	66	66	66	66	66	66	66	66	66	66	66	66	66	66	66	66	66	66	66	66	66	66	66	66	66	66	66	66	66	66	66	66	62	65	62	58
				Exposed	66	66	66	66	66	66	66	66	66	66	66	66	66	66	66	66	66	66	66	66	66	66	66	66	66	66	65	66	60	55	66	60	55	66	56	51	66	52	48	65	49	45
		10:12	39.8	Non-Exposed	70	70	70	70	70	70	70	70	70	70	70	70	70	70	70	70	70	70	70	70	70	70	70	70	70	69	65	70	64	60	70	60	55	70	56	51	69	52	48	67	49	45
				Exposed	70	70	70	70	70	70	70	70	70	70	70	70	70	70	70	70	70	70	70	70	70	70	70	70	70	69	65	70	64	60	70	60	55	70	56	51	69	52	48	67	49	45
		11:12	42.5	Non-Exposed	73	73	73	73	73	73	73	73	73	73	73	73	73	73	73	73	73	73	73	73	73	73	73	73	73	73	73	73	73	73	73	73	71	72	70	66	71	65	61	70	62	57
				Exposed	73	73	73	73	73	73	73	73	73	73	73	73	73	73	73	73	73	73	73	73	73	73	73	71	73	69	65	73	64	60	73	59	55	72	55	51	71	52	48	67	49	45
		12:12	45	Non-Exposed	77	77	77	77	77	77	77	77	77	77	77	77	77	77	77	77	77	77	77	77	77	77	77	77	77	77	77	77	77	77	76	75	71	75	70	66	74	65	61	73	61	57
				Exposed	77	77	77	77	77	77	77	77	77	77	77	77	77	77	77	77	77	77	77	77	75	77	76	71	77	69	65	77	64	60	76	59	55	75	55	51	70	52	48	67	49	45
	C	2:12	9.5	Non-Exposed	58	58	58	58	58	58	58	58	58	58	58	58	58	58	58	58	58	58	58	58	58	58	58	58	58	58	58	58	58	58	58	58	58	58	58	58	58	58	56	57	55	53
				Exposed	58	58	58	58	58	58	58	58	58	58	58	58	58	58	58	58	58	58	58	58	58	58	58	58	58	58	58	58	57	55	58	54	51	58	50	48	55	48	46	52	45	0
		3:12	14.0	Non-Exposed	56	56	56	56	56	56	56	56	56	56	56	56	56	56	56	56	56	56	56	56	56	56	56	56	56	56	56	56	56	56	56	56	56	56	56	56	56	56	56	56	55	53
				Exposed	56	56	56	56	56	56	56	56	56	56	56	56	56	56	56	56	56	56	56	56	56	56	56	56	56	56	56	56	56	55	56	54	51	56	50	48	55	47	46	52	45	0
		4:12	18.4	Non-Exposed	56	56	56	56	56	56	56	56	56	56	56	56	56	56	56	56	56	56	56	56	56	56	56	56	56	56	56	56	56	56	56	56	56	56	56	56	56	56	56	56	55	53
				Exposed	56	56	56	56	56	56	56	56	56	56	56	56	56	56	56	56	56	56	56	56	56	56	56	56	56	56	56	56	56	55	56	53	51	56	50	48	55	47	46	52	45	0
		5:12	22.6	Non-Exposed	57	57		57	57		57	57		57	57		57	57		57	57		57	57		57	57		57	57		57	57		57	57		57	57		57	57		56	56	
				Exposed	57	57		57	57		57	57		57	57		57	57		57	57		57	57		57	57		57	57		57	57		57	57		57	55		57	52		56	49	
		6:12	26.6	Non-Exposed	59	59		59	59		59	59		59	59		59	59		59	59		59	59		59	59		59	59		59	59		59	59		59	59		58	58		57	57	
				Exposed	59	59		59	59		59	59		59	59		59	59		59	59		59	59		59	59		59	59		59	59		59	58		59	55		58	52		57	49	
		7:12	30.3	Non-Exposed	61	61	61	61	61	61	61	61	61	61	61	61	61	61	61	61	61	61	61	61	61	61	61	61	61	61	61	61	61	61	61	61	58	60	58	54	60	54	50	59	51	47
				Exposed	61	61	61	61	61	61	61	61	61	61	61	61	61	61	61	61	61	61	61	61	61	61	61	58	61	57	53	61	53	49	61	49	45	60	46	42	60	44	0	57	0	0
		8:12	33.7	Non-Exposed	63	63	63	63	63	63	63	63	63	63	63	63	63	63	63	63	63	63	63	63	63	63	63	63	63	63	63	63	63	63	63	62	58	62	58	54	61	54	50	60	51	47
				Exposed	63	63	63	63	63	63	63	63	63	63	63	63	63	63	63	63	63	61	63	62	58	63	57	53	63	53	49	63	49	45	62	46	42	60	44	0	57	0	0	57	0	0
		9:12	36.9	Non-Exposed	66	66	66	66	66	66	66	66	66	66	66	66	66	66	66	66	66	66	66	66	66	66	66	66	66	66	66	66	66	63	65	62	58	64	58	54	63	54	50	62	51	47
				Exposed	66	66	66	66	66	66	66	66	66	66	66	66	66	66	66	66	66	64	66	65	61	66	62	58	66	57	53	66	53	49	65	49	45	63	46	42	60	44	0	57	0	0
		10:12	39.8	Non-Exposed	70	70	70	70	70	70	70	70	70	70	70	70	70	70	70	70	70	70	70	70	70	70	70	70	70	70	68	69	67	62	68	62	58	67	58	54	65	54	50	64	51	47
				Exposed	70	70	70	70	70	70	70	70	70	70	70	70	70	70	67	70	68	64	70	65	61	70	62	58	70	57	53	69	53	49	67	49	45	63	46	42	60	44	0	57	0	0
		11:12	42.5	Non-Exposed	73	73	73	73	73	73	73	73	73	73	73	73	73	73	73	73	73	73	73	73	73	73	73	73	73	72	68	72	66	62	70	62	58	69	58	54	68	54	50	66	51	47
				Exposed	73	73	73	73	73	73	73	73	73	73	73	71	73	71	67	73	68	64	73	65	61	73	62	58	73	57	53	72	53	49	67	49	45	63	46	42	60	44	0	56	0	0
		12:12	45	Non-Exposed	77	77	77	77	77	77	77	77	77	77	77	77	77	77	77	77	77	77	77	77	77	77	77	75	76	72	68	74	66	62	73	62	58	71	58	53	70	54	50	68	51	47
				Exposed	77	77	77	77	77	77	77	77	76	77	75	71	77	71	67	77	68	64	77	65	61	77	62	58	76	57	53	71	53	49	67	49	45	63	46	42	60	44	0	56	0	0
	D	2:12	9.5	Non-Exposed	58	58	58	58	58	58	58	58	58	58	58	58	58	58	58	58	58	58	58	58	58	58	58	58	58	58	58	58	58	58	58	58	58	58	57	55	57	54	52	56	51	49
				Exposed	58	58	58	58	58	58	58	58	58	58	58	58	58	58	58	58	58	58	58	58	58	58	58	58	58	56	54	58	53	50	57	49	47	54	46	44	51	0	0	48	0	0
		3:12	14.0	Non-Exposed	56	56	56	56	56	56	56	56	56	56	56	56	56	56	56	56	56	56	56	56	56	56	56	56	56	56	56	56	56	56	56	56	56	56	56	55	55	54	51	54	51	49
				Exposed	56	56	56	56	56	56	56	56	56	56	56	56	56	56	56	56	56	56	56	56	56	56	56	56	56	56	54	56	52	50	56	49	47	53	46	44	50	0	0	48	0	0
		4:12	18.4	Non-Exposed	56	56	56	56	56	56	56	56	56	56	56	56	56	56	56	56	56	56	56	56	56	56	56	56	56	56	56	56	56	56	56	56	56	56	56	54	55	54	51	54	51	49
				Exposed	56	56	56	56	56	56	56	56	56	56	56	56	56	56	56	56	56	56	56	56	56	56	56	56	56	56	54	56	52	50	56	49	47	53	46	0	50	0	0	48	0	0
		5:12	22.6	Non-Exposed	57	57		57	57		57	57		57	57		57	57		57	57		57	57		57	57		57	57		57	57		57	57		57	57		56	56		55	55	
				Exposed	57	57		57	57		57	57		57	57		57	57		57	57		57	57		57	57		57	57		57	57		57	54		57	51		56	48		54	45	
		6:12	26.6	Non-Exposed	59	59		59	59		59	59		59	59		59	59		59	59		59	59		59	59		59	59		59	59		59	59		58	58		57	57		56	55	
				Exposed	59	59		59	59		59	59		59	59		59	59		59	59		59	59		59	59		59	59		59	57		59	54		58	50		57	48		54	45	
		7:12	30.3	Non-Exposed	61	61	61	61	61	61	61	61	61	61	61	61	61	61	61	61	61	61	61	61	61	61	61	61	61	61	61	61	61	57	60	56	52	59	53	49	58	49	45	57	47	42
				Exposed	61	61	61	61	61	61	61	61	61	61	61	61	61	61	61	61	61	58	61	59	55	61	57	53	61	52	48	61	48	44	60	45	41	58	43	0	55	0	0	52	0	0
		8:12	33.7	Non-Exposed	63	63	63	63	63	63	63	63	63	63	63	63	63	63	63	63	63	63	63	63	63	63	63	63	63	63	61	63	61	56	62	56	52	61	53	48	60	49	45	59	47	42
				Exposed	63	63	63	63	63	63	63	63	63	63	63	63	63	63	61	63	62	58	63	59	55	63	57	52	63	52	48	63	48	44	62	45	41	58	43	0	55	0	0	52	0	0
		9:12	36.9	Non-Exposed	66	66	66	66	66	66	66	66	66	66	66	66	66	66	66	66	66	66	66	66	66	66	66	66	66	66	61	65	61	56	64	56	52	63	52	48	62	49	45	60	47	42
				Exposed	66	66	66	66	66	66	66	66	66	66	66	64	66	65	61	66	62	58	66	59	55	66	57	52	66	52	48	65	48	44	62	45	41	58	42	0	55	0	0	52	0	0
		10:12	39.8	Non-Exposed	70	70	70	70	70	70	70	70	70	70	70	70	70	70	70	70	70	70	70	70	70	70	70	67	69	65	61	67	60	56	66	56	52	65	52	48	64	49	45	62	47	42
				Exposed	70	70	70	70	70	70	70	70	68	70	68	64	70	65	61	70	62	58	70	59	55	70	57	52	69	52	48	66	48	44	62	45	41	58	42	0	55	0	0	52	0	0
		11:12	42.5	Non-Exposed	73	73	73	73	73	73	73	73	73	73	73	73	73	73	73	73	73	73	73	73	70	73	71	67	71	65	61	70	60	56	68	56	52	67	52	48	66	49	45	64	47	42
				Exposed	73	73	73	73	73	72	73	72	68	73	68	64	73	65	61	73	62	58	73	59	55	73	56	52	70	52	48	66	48	44	62	45	41	58	42	0	55	0	0	52	0	0
		12:12	45	Non-Exposed	77	77	77	77	77	77	77	77	77	77	77	77	77	77	77	77	77	74	76	75	70	76	71	67	74	65	61	72	60	56	71	56	52	69	52	48	67	49	45	64	46	42
				Exposed	77	77	77	77	76	72	77	72	68	77	68	64	77	65	61	77	62	58	76	59	55	76	56	52	70	52	48	66	48	44	62	45	41	58	42	0	55	0	0	52	0	0

Tamarack 2.3 Rail – Hip Flush-Mount on 30 Foot Maximum Mean Roof Height – Landscape – Panel Width = 40 Inches or Less

Ground Snow Load	Exposure Category	Roof Pitch	Roof Angle	Wind Speed (mph)	95			100			105			110			115			120			125			130			140			150			160			170			180			190		
				Roof Area	1	2	3	1	2	3	1	2	3	1	2	3	1	2	3	1	2	3	1	2	3	1	2	3	1	2	3	1	2	3	1	2	3	1	2	3	1	2	3	1	2	3
55	B	2:12	9.5	Non-Exposed	55	55	55	55	55	55	55	55	55	55	55	55	55	55	55	55	55	55	55	55	55	55	55	55	55	55	55	55	55	55	55	55	55	55	55	55	55	55	55	55	55	55
				Exposed	55	55	55	55	55	55	55	55	55	55	55	55	55	55	55	55	55	55	55	55	55	55	55	55	55	55	55	55	55	55	55	55	55	55	55	55	55	55	54	55	53	51
		3:12	14.0	Non-Exposed	53	53	53	53	53	53	53	53	53	53	53	53	53	53	53	53	53	53	53	53	53	53	53	53	53	53	53	53	53	53	53	53	53	53	53	53	53	53	53	53	53	53
				Exposed	53	53	53	53	53	53	53	53	53	53	53	53	53	53	53	53	53	53	53	53	53	53	53	53	53	53	53	53	53	53	53	53	53	53	53	53	53	53	53	53	53	51
		4:12	18.4	Non-Exposed	53	53	53	53	53	53	53	53	53	53	53	53	53	53	53	53	53	53	53	53	53	53	53	53	53	53	53	53	53	53	53	53	53	53	53	53	53	53	53	53	53	53
				Exposed	53	53	53	53	53	53	53	53	53	53	53	53	53	53	53	53	53	53	53	53	53	53	53	53	53	53	53	53	53	53	53	53	53	53	53	53	53	53	53	53	53	51
		5:12	22.6	Non-Exposed	54	54		54	54		54	54		54	54		54	54		54	54		54	54		54	54		54	54		54	54		54	54		54	54		54	54		54	54	
				Exposed	54	54		54	54		54	54		54	54		54	54		54	54		54	54		54	54		54	54		54	54		54	54		54	54		54	54		54	54	
		6:12	26.6	Non-Exposed	56	56		56	56		56	56		56	56		56	56		56	56		56	56		56	56		56	56		56	56		56	56		56	56		56	56		56	56	
				Exposed	56	56		56	56		56	56		56	56		56	56		56	56		56	56		56	56		56	56		56	56		56	56		56	56		56	56		56	56	
		7:12	30.3	Non-Exposed	58	58	58	58	58	58	58	58	58	58	58	58	58	58	58	58	58	58	58	58	58	58	58	58	58	58	58	58	58	58	58	58	58	58	58	58	58	58	58	58	58	58
				Exposed	58	58	58	58	58	58	58	58	58	58	58	58	58	58	58	58	58	58	58	58	58	58	58	58	58	58	58	58	58	56	58	56	52	58	52	48	58	49	45	58	49	45
		8:12	33.7	Non-Exposed	61	61	61	61	61	61	61	61	61	61	61	61	61	61	61	61	61	61	61	61	61	61	61	61	61	61	61	61	61	61	61	61	61	61	61	61	61	61	61	61	61	58
				Exposed	61	61	61	61	61	61	61	61	61	61	61	61	61	61	61	61	61	61	61	61	61	61	61	61	61	61	61	61	61	60	61	60	56	61	56	52	61	52	48	61	49	45
		9:12	36.9	Non-Exposed	63	63	63	63	63	63	63	63	63	63	63	63	63	63	63	63	63	63	63	63	63	63	63	63	63	63	63	63	63	63	63	63	63	63	63	63	63	63	62	63	62	58
				Exposed	63	63	63	63	63	63	63	63	63	63	63	63	63	63	63	63	63	63	63	63	63	63	63	63	63	63	63	63	63	60	63	60	55	63	56	51	63	52	48	63	49	45
		10:12	39.8	Non-Exposed	67	67	67	67	67	67	67	67	67	67	67	67	67	67	67	67	67	67	67	67	67	67	67	67	67	67	67	67	67	67	67	67	67	67	67	66	67	66	61	66	62	57
				Exposed	67	67	67	67	67	67	67	67	67	67	67	67	67	67	67	67	67	67	67	67	67	67	67	67	67	67	65	67	64	60	67	60	55	67	56	51	67	52	48	66	49	45
		11:12	42.5	Non-Exposed	70	70	70	70	70	70	70	70	70	70	70	70	70	70	70	70	70	70	70	70	70	70	70	70	70	70	70	70	70	70	70	70	70	70	70	66	69	65	61	68	62	57
				Exposed	70	70	70	70	70	70	70	70	70	70	70	70	70	70	70	70	70	70	70	70	70	70	70	70	70	69	65	70	64	60	70	59	55	70	55	51	69	52	48	67	49	45
		12:12	45	Non-Exposed	74	74	74	74	74	74	74	74	74	74	74	74	74	74	74	74	74	74	74	74	74	74	74	74	74	74	74	74	74	74	74	74	71	73	70	66	72	65	61	71	61	57
				Exposed	74	74	74	74	74	74	74	74	74	74	74	74	74	74	74	74	74	74	74	74	74	74	74	71	74	69	65	74	64	60	74	59	55	73	55	51	70	52	48	67	49	45
	C	2:12	9.5	Non-Exposed	55	55	55	55	55	55	55	55	55	55	55	55	55	55	55	55	55	55	55	55	55	55	55	55	55	55	55	55	55	55	55	55	55	55	55	55	55	55	55	55	55	53
				Exposed	55	55	55	55	55	55	55	55	55	55	55	55	55	55	55	55	55	55	55	55	55	55	55	55	55	55	55	55	55	55	55	54	51	55	50	48	55	48	46	52	45	0
		3:12	14.0	Non-Exposed	53	53	53	53	53	53	53	53	53	53	53	53	53	53	53	53	53	53	53	53	53	53	53	53	53	53	53	53	53	53	53	53	53	53	53	53	53	53	53	53	53	53
				Exposed	53	53	53	53	53	53	53	53	53	53	53	53	53	53	53	53	53	53	53	53	53	53	53	53	53	53	53	53	53	51	53	50	48	53	47	46	52	45	0			
		4:12	18.4	Non-Exposed	53	53	53	53	53	53	53	53	53	53	53	53	53	53	53	53	53	53	53	53	53	53	53	53	53	53	53	53	53	53	53	53	53	53	53	53	53	53	53	53	53	53
				Exposed	53	53	53	53	53	53	53	53	53	53	53	53	53	53	53	53	53	53	53	53	53	53	53	53	53	53	53	53	53	51	53	50	48	53	47	46	52	45	0			
		5:12	22.6	Non-Exposed	54	54		54	54		54	54		54	54		54	54		54	54		54	54		54	54		54	54		54	54		54	54		54	54		54	54		54	54	
				Exposed	54	54		54	54		54	54		54	54		54	54		54	54		54	54		54	54		54	54		54	54		54	52		54	49							
		6:12	26.6	Non-Exposed	56	56		56	56		56	56		56	56		56	56		56	56		56	56		56	56		56	56		56	56		56	56		56	56		56	56		56	56	
				Exposed	56	56		56	56		56	56		56	56		56	56		56	56		56	56		56	56		56	56		56	56		56	56		56	55		56	52		56	49	
		7:12	30.3	Non-Exposed	58	58	58	58	58	58	58	58	58	58	58	58	58	58	58	58	58	58	58	58	58	58	58	58	58	58	58	58	58	58	58	58	54	58	54	50	57	51	47			
				Exposed	58	58	58	58	58	58	58	58	58	58	58	58	58	58	58	58	58	58	58	58	58	58	58	58	58	57	53	58	53	49	58	49	45	58	46	42	58	44	0	57	0	0
		8:12	33.7	Non-Exposed	61	61	61	61	61	61	61	61	61	61	61	61	61	61	61	61	61	61	61	61	61	61	61	61	61	61	61	61	61	61	61	61	58	60	58	54	59	54	50	58	51	47
				Exposed	61	61	61	61	61	61	61	61	61	61	61	61	61	61	61	61	61	61	61	61	61	61	61	61	61	57	53	61	53	49	61	49	45	60	46	42	59	44	0	57	0	0
		9:12	36.9	Non-Exposed	63	63	63	63	63	63	63	63	63	63	63	63	63	63	63	63	63	63	63	63	63	63	63	63	63	63	63	63	63	63	63	62	58	62	58	54	61	54	50	60	51	47
				Exposed	63	63	63	63	63	63	63	63	63	63	63	63	63	63	63	63	63	63	63	63	61	63	62	58	63	57	53	63	53	49	63	49	45	62	46	42	60	44	0	57	0	0
		10:12	39.8	Non-Exposed	67	67	67	67	67	67	67	67	67	67	67	67	67	67	67	67	67	67	67	67	67	67	67	67	67	67	67	67	67	62	66	62	58	65	58	54	64	54	50	62	51	47
				Exposed	67	67	67	67	67	67	67	67	67	67	67	67	67	67	67	67	67	64	67	65	61	67	62	58	67	57	53	67	53	49	66	49	45	63	46	42	60	44	0	57	0	0
		11:12	42.5	Non-Exposed	70	70	70	70	70	70	70	70	70	70	70	70	70	70	70	70	70	70	70	70	70	70	70	70	70	70	68	69	66	62	68	62	58	67	58	54	66	54	50	65	51	47
				Exposed	70	70	70	70	70	70	70	70	70	70	70	70	70	70	67	70	68	64	70	65	61	70	62	58	70	57	53	69	53	49	67	49	45	63	46	42	60	44	0	56	0	0
		12:12	45	Non-Exposed	74	74	74	74	74	74	74	74	74	74	74	74	74	74	74	74	74	74	74	74	74	74	74	74	73	72	68	72	66	62	71	62	58	69	58	53	68	54	50	67	51	47
				Exposed	74	74	74	74	74	74	74	74	74	74	74	71	74	71	67	74	68	64	74	65	61	74	62	58	73	57	53	71	53	49	67	49	45	63	46	42	60	44	0	56	0	0
	D	2:12	9.5	Non-Exposed	55	55	55	55	55	55	55	55	55	55	55	55	55	55	55	55	55	55	55	55	55	55	55	55	55	55	55	55	55	55	55	55	55	55	55	55	55	54	52	54	51	49
				Exposed	55	55	55	55	55	55	55	55	55	55	55	55	55	55	55	55	55	55	55	55	55	55	55	55	55	55	54	55	53	50	55	49	47	54	46	44	51	0	0	48	0	0
		3:12	14.0	Non-Exposed	53	53	53	53	53	53	53	53	53	53	53	53	53	53	53	53	53	53	53	53	53	53	53	53	53	53	53	53	53	53	53	53	53	53	53	53	53	53	51	53	51	49
				Exposed	53	53	53	53	53	53	53	53	53	53	53	53	53	53	53	53	53	53	53	53	53	53	53	53	53	53	53	53	52	50	53	49	47	53	46	44	50	0	0	48	0	0
		4:12	18.4	Non-Exposed	53	53	53	53	53	53	53	53	53	53	53	53	53	53	53	53	53	53	53	53	53	53	53	53	53	53	53	53	53	53	53	53	53	53	53	53	53	53	51	53	51	49
				Exposed	53	53	53	53	53	53	53	53	53	53	53	53	53	53	53	53	53	53	53	53	53	53	53	53	53	53	53	53	52	50	53	49	47	53	46	0	50	0	0	48	0	0
		5:12	22.6	Non-Exposed	54	54		54	54		54	54		54	54		54	54		54	54		54	54		54	54		54	54		54	54		54	54		54	54		54	54		53	53	
				Exposed	54	54		54	54		54	54		54	54		54	54		54	54		54	54		54	54		54	54		54	54		54	54		54	51		54	48		53	45	
		6:12	26.6	Non-Exposed	56	56		56	56		56	56		56	56		56	56		56	56		56	56		56	56		56	56		56	56		56	56		56	56		55	55		54	54	
				Exposed	56	56		56	56		56	56		56	56		56	56		56	56		56	56		56	56		56	56		56	56		56	54		56	50		55	48		54	45	
		7:12	30.3	Non-Exposed	58	58	58	58	58	58	58	58	58	58	58	58	58	58	58	58	58	58	58	58	58	58	58	58	58	58	58	58	58	57	58	56	52	57	53	49	56	49	45	55	47	42
				Exposed	58	58	58	58	58	58	58	58	58	58	58	58	58	58	58	58	58	58	58	58	55	58	57	53	58	52	48	58	48	44	58	45	41	57	43	0	55	0	0	52	0	0
		8:12	33.7	Non-Exposed	61	61	61	61	61	61	61	61	61	61	61	61	61	61	61	61	61	61	61	61	61	61	61	61	61	61	61	61	61	56	60	56	52	59	53	48	58	49	45	57	47	42
				Exposed	61	61	61	61	61	61	61	61	61	61	61	61	61	61	61	61	61	58	61	59	55	61	57	52	61	52	48	61	48	44	60	45	41	58	43	0	55	0	0	52	0	0
		9:12	36.9	Non-Exposed	63	63	63	63	63	63	63	63	63	63	63	63	63	63	63	63	63	63	63	63	61	63	61	56	62	56	52	61	52	48	60	49	45	59	47	42						
				Exposed	63	63	63	63	63	63	63	63	63	63	63	63	63	63	61	63	62	58	63	59	55	63	57	52	63	52	48	63	48	44	62	45	41	58	42	0	55	0	0	52	0	0
		10:12	39.8	Non-Exposed	67	67	67	67	67	67	67	67	67	67	67	67	67	67	67	67	67	67	67	67	67	67	67	67	67	65	61	65	60	56	64	56	52	63	52	48	62	49	45	61	47	42
				Exposed	67	67	67	67	67	67	67	67	67	67	67	64	67	65	61	67	62	58	67	59	55	67	57	52	67	52	48	65	48	44	62	45	41	58	42	0	55	0	0	52	0	0
		11:12	42.5	Non-Exposed	70	70	70	70	70	70	70	70	70	70	70	70	70	70	70	70	70	70	70	70	70	70	70	67	69	65	61	68	60	56	67	56	52	65	52	48	64	49	45	62	47	42
				Exposed	70	70	70	70	70	70	70	70	68	70	68	64	70	65	61	70	62	58	70	59	55	70	56	52	69	52	48	66	48	44	62	45	41	58	42	0	55	0	0	52	0	0
		12:12	45	Non-Exposed	74	74	74	74	74	74	74	74	74	74	74	74	74	74	74	74	74	74	74	74	70	73	71	67	72	65	61	70	60	56	69	56	52	67	52	48	66	49	45	64	46	42
				Exposed	74	74	74	74	74	72	74	72	68	74	68	64	74	65	61	74	62	58	74	59	55	73	56	52	70	52	48	66	48	44	62	45	41	58	42	0	55	0	0	52	0	0

Tamarack 2.3 Rail – Hip Flush-Mount on 30 Foot Maximum Mean Roof Height – Landscape – Panel Width = 40 Inches or Less

Ground Snow Load	Exposure Category	Roof Pitch	Roof Angle	Wind Speed (mph)	95			100			105			110			115			120			125			130			140			150			160			170			180			190		
				Roof Area	1	2	3	1	2	3	1	2	3	1	2	3	1	2	3	1	2	3	1	2	3	1	2	3	1	2	3	1	2	3	1	2	3	1	2	3	1	2	3	1	2	3
60	B	2:12	9.5	Non-Exposed	53	53	53	53	53	53	53	53	53	53	53	53	53	53	53	53	53	53	53	53	53	53	53	53	53	53	53	53	53	53	53	53	53	53	53	53	53	53	53	53	53	53
				Exposed	53	53	53	53	53	53	53	53	53	53	53	53	53	53	53	53	53	53	53	53	53	53	53	53	53	53	53	53	53	53	53	53	53	53	53	53	53	53	53	53	53	51
		3:12	14.0	Non-Exposed	51	51	51	51	51	51	51	51	51	51	51	51	51	51	51	51	51	51	51	51	51	51	51	51	51	51	51	51	51	51	51	51	51	51	51	51	51	51	51	51	51	51
				Exposed	51	51	51	51	51	51	51	51	51	51	51	51	51	51	51	51	51	51	51	51	51	51	51	51	51	51	51	51	51	51	51	51	51	51	51	51	51	51	51	51	51	51
		4:12	18.4	Non-Exposed	51	51	51	51	51	51	51	51	51	51	51	51	51	51	51	51	51	51	51	51	51	51	51	51	51	51	51	51	51	51	51	51	51	51	51	51	51	51	51	51	51	51
				Exposed	51	51	51	51	51	51	51	51	51	51	51	51	51	51	51	51	51	51	51	51	51	51	51	51	51	51	51	51	51	51	51	51	51	51	51	51	51	51	51	51	51	51
		5:12	22.6	Non-Exposed	52	52		52	52		52	52		52	52		52	52		52	52		52	52		52	52		52	52		52	52		52	52		52	52		52	52		52	52	
				Exposed	52	52		52	52		52	52		52	52		52	52		52	52		52	52		52	52		52	52		52	52		52	52		52	52		52	52		52	52	
		6:12	26.6	Non-Exposed	54	54		54	54		54	54		54	54		54	54		54	54		54	54		54	54		54	54		54	54		54	54		54	54		54	54		54	54	
				Exposed	54	54		54	54		54	54		54	54		54	54		54	54		54	54		54	54		54	54		54	54		54	54		54	54		54	54		54	54	
		7:12	30.3	Non-Exposed	56	56	56	56	56	56	56	56	56	56	56	56	56	56	56	56	56	56	56	56	56	56	56	56	56	56	56	56	56	56	56	56	56	56	56	56	56	56	56	56	56	56
				Exposed	56	56	56	56	56	56	56	56	56	56	56	56	56	56	56	56	56	56	56	56	56	56	56	56	56	56	56	56	56	56	56	56	52	56	52	48	56	49	45	56	49	45
		8:12	33.7	Non-Exposed	58	58	58	58	58	58	58	58	58	58	58	58	58	58	58	58	58	58	58	58	58	58	58	58	58	58	58	58	58	58	58	58	58	58	58	58	58	58	58	58	58	58
				Exposed	58	58	58	58	58	58	58	58	58	58	58	58	58	58	58	58	58	58	58	58	58	58	58	58	58	58	58	58	58	56	58	56	52	58	52	48	58	49	45	58	49	45
		9:12	36.9	Non-Exposed	61	61	61	61	61	61	61	61	61	61	61	61	61	61	61	61	61	61	61	61	61	61	61	61	61	61	61	61	61	61	61	61	61	61	61	61	61	61	61	61	61	58
				Exposed	61	61	61	61	61	61	61	61	61	61	61	61	61	61	61	61	61	61	61	61	61	61	61	61	61	61	61	61	60	55	61	56	51	61	52	48	61	49	45	61	49	45
		10:12	39.8	Non-Exposed	64	64	64	64	64	64	64	64	64	64	64	64	64	64	64	64	64	64	64	64	64	64	64	64	64	64	64	64	64	64	64	64	64	64	64	64	61	64	62	57	64	49	45
				Exposed	64	64	64	64	64	64	64	64	64	64	64	64	64	64	64	64	64	64	64	64	64	64	64	64	64	64	64	64	60	55	64	56	51	64	52	48	64	49	45	64	49	45
		11:12	42.5	Non-Exposed	67	67	67	67	67	67	67	67	67	67	67	67	67	67	67	67	67	67	67	67	67	67	67	67	67	67	67	67	67	67	67	67	67	67	67	67	67	67	67	67	67	67
				Exposed	67	67	67	67	67	67	67	67	67	67	67	67	67	67	67	67	67	67	67	67	67	67	67	67	67	67	67	67	60	55	67	55	51	67	52	48	66	49	45	67	49	45
		12:12	45	Non-Exposed	71	71	71	71	71	71	71	71	71	71	71	71	71	71	71	71	71	71	71	71	71	71	71	71	71	71	71	71	71	71	71	70	66	70	65	61	69	61	57	69	61	57
				Exposed	71	71	71	71	71	71	71	71	71	71	71	71	71	71	71	71	71	71	71	71	71	71	71	71	71	69	65	71	64	60	71	59	55	71	55	51	70	52	48	67	49	45
	C	2:12	9.5	Non-Exposed	53	53	53	53	53	53	53	53	53	53	53	53	53	53	53	53	53	53	53	53	53	53	53	53	53	53	53	53	53	53	53	53	53	53	53	53	53	53	53	53	53	53
				Exposed	53	53	53	53	53	53	53	53	53	53	53	53	53	53	53	53	53	53	53	53	53	53	53	53	53	53	53	53	53	51	53	50	48	53	48	46	52	45	0	52	45	0
		3:12	14.0	Non-Exposed	51	51	51	51	51	51	51	51	51	51	51	51	51	51	51	51	51	51	51	51	51	51	51	51	51	51	51	51	51	51	51	51	51	51	51	51	51	51	51	51	51	51
				Exposed	51	51	51	51	51	51	51	51	51	51	51	51	51	51	51	51	51	51	51	51	51	51	51	51	51	51	51	51	51	51	51	50	48	51	47	46	51	45	0	51	45	0
		4:12	18.4	Non-Exposed	51	51	51	51	51	51	51	51	51	51	51	51	51	51	51	51	51	51	51	51	51	51	51	51	51	51	51	51	51	51	51	51	51	51	51	51	51	51	51	51	51	51
				Exposed	51	51	51	51	51	51	51	51	51	51	51	51	51	51	51	51	51	51	51	51	51	51	51	51	51	51	51	51	51	51	51	50	48	51	47	46	51	45	0	51	45	0
		5:12	22.6	Non-Exposed	52	52		52	52		52	52		52	52		52	52		52	52		52	52		52	52		52	52		52	52		52	52		52	52		52	52		52	52	
				Exposed	52	52		52	52		52	52		52	52		52	52		52	52		52	52		52	52		52	52		52	52		52	52		52	52		52	52		52	49	
		6:12	26.6	Non-Exposed	54	54		54	54		54	54		54	54		54	54		54	54		54	54		54	54		54	54		54	54		54	54		54	54		54	54		54	54	
				Exposed	54	54		54	54		54	54		54	54		54	54		54	54		54	54		54	54		54	54		54	54		54	54		54	54		54	52		54	49	
60		7:12	30.3	Non-Exposed	56	56	56	56	56	56	56	56	56	56	56	56	56	56	56	56	56	56	56	56	56	56	56	56	56	56	56	56	56	56	56	56	54	56	54	50	55	51	47	55	51	47
				Exposed	56	56	56	56	56	56	56	56	56	56	56	56	56	56	56	56	56	56	56	56	56	56	56	56	56	56	53	56	53	49	56	49	45	56	46	42	56	44	0	55	0	0
		8:12	33.7	Non-Exposed	58	58	58	58	58	58	58	58	58	58	58	58	58	58	58	58	58	58	58	58	58	58	58	58	58	58	58	58	58	58	58	58	54	58	54	50	57	51	47	57	51	47
				Exposed	58	58	58	58	58	58	58	58	58	58	58	58	58	58	58	58	58	58	58	58	58	58	58	58	58	57	53	58	53	49	58	49	45	58	46	42	58	44	0	57	0	0
		9:12	36.9	Non-Exposed	61	61	61	61	61	61	61	61	61	61	61	61	61	61	61	61	61	61	61	61	61	61	61	61	61	61	61	61	61	61	61	61	58	61	58	54	60	54	50	59	51	47
				Exposed	61	61	61	61	61	61	61	61	61	61	61	61	61	61	61	61	61	61	61	61	61	61	61	58	61	57	53	61	53	49	61	49	45	61	46	42	60	44	0	57	0	0
		10:12	39.8	Non-Exposed	64	64	64	64	64	64	64	64	64	64	64	64	64	64	64	64	64	64	64	64	64	64	64	64	64	64	64	64	64	62	64	62	58	63	58	54	62	54	50	61	51	47
				Exposed	64	64	64	64	64	64	64	64	64	64	64	64	64	64	64	64	64	64	64	64	61	64	62	58	64	57	53	64	53	49	64	49	45	63	46	42	60	44	0	57	0	0
		11:12	42.5	Non-Exposed	67	67	67	67	67	67	67	67	67	67	67	67	67	67	67	67	67	67	67	67	67	67	67	67	67	67	67	67	66	62	66	62	58	65	58	54	64	54	50	63	51	47
				Exposed	67	67	67	67	67	67	67	67	67	67	67	67	67	67	67	67	67	64	67	65	61	67	62	58	67	57	53	67	53	49	66	49	45	63	46	42	60	44	0	56	0	0
		12:12	45	Non-Exposed	71	71	71	71	71	71	71	71	71	71	71	71	71	71	71	71	71	71	71	71	71	71	71	71	71	71	68	70	66	62	69	62	58	68	58	53	66	54	50	65	51	47
				Exposed	71	71	71	71	71	71	71	71	71	71	71	71	71	71	67	71	68	64	71	65	61	71	62	58	71	57	53	70	53	49	67	49	45	63	46	42	60	44	0	56	0	0
	D	2:12	9.5	Non-Exposed	53	53	53	53	53	53	53	53	53	53	53	53	53	53	53	53	53	53	53	53	53	53	53	53	53	53	53	53	53	53	53	53	53	53	53	52	53	51	49
				Exposed	53	53	53	53	53	53	53	53	53	53	53	53	53	53	53	53	53	53	53	53	53	53	53	53	53	53	53	53	53	50	53	49	47	53	46	44	51	0	0	48	0	0
		3:12	14.0	Non-Exposed	51	51	51	51	51	51	51	51	51	51	51	51	51	51	51	51	51	51	51	51	51	51	51	51	51	51	51	51	51	51	51	51	51	51	51	51	51	51	49	51	51	49
				Exposed	51	51	51	51	51	51	51	51	51	51	51	51	51	51	51	51	51	51	51	51	51	51	51	51	51	51	51	51	51	50	51	49	47	51	46	44	50	0	0	48	0	0
		4:12	18.4	Non-Exposed	51	51	51	51	51	51	51	51	51	51	51	51	51	51	51	51	51	51	51	51	51	51	51	51	51	51	51	51	51	51	51	51	51	51	51	51	51	51	49	51	51	49
				Exposed	51	51	51	51	51	51	51	51	51	51	51	51	51	51	51	51	51	51	51	51	51	51	51	51	51	51	51	51	51	50	51	49	47	51	46	0	50	0	0	48	0	0
		5:12	22.6	Non-Exposed	52	52		52	52		52	52		52	52		52	52		52	52		52	52		52	52		52	52		52	52		52	52		52	52		52	52		52	52	
				Exposed	52	52		52	52		52	52		52	52		52	52		52	52		52	52		52	52		52	52		52	52		52	52		52	51		52	48		52	45	
		6:12	26.6	Non-Exposed	54	54		54	54		54	54		54	54		54	54		54	54		54	54		54	54		54	54		54	54		54	54		54	54		54	54		53	53	
				Exposed	54	54		54	54		54	54		54	54		54	54		54	54		54	54		54	54		54	54		54	54		54	54		54	50		54	48		53	45	
		7:12	30.3	Non-Exposed	56	56	56	56	56	56	56	56	56	56	56	56	56	56	56	56	56	56	56	56	56	56	56	56	56	56	56	56	56	56	56	56	52	55	53	49	55	49	45	54	47	42
				Exposed	56	56	56	56	56	56	56	56	56	56	56	56	56	56	56	56	56	56	56	56	55	56	56	53	56	52	48	56	48	44	56	45	41	55	43	0	55	0	0	52	0	0
		8:12	33.7	Non-Exposed	58	58	58	58	58	58	58	58	58	58	58	58	58	58	58	58	58	58	58	58	58	58	58	58	58	58	58	58	58	56	58	56	52	57	53	48	56	49	45	55	47	42
				Exposed	58	58	58	58	58	58	58	58	58	58	58	58	58	58	58	58	58	58	58	58	55	58	57	52	58	52	48	58	48	44	58	45	41	57	43	0	55	0	0	52	0	0
		9:12	36.9	Non-Exposed	61	61	61	61	61	61	61	61	61	61	61	61	61	61	61	61	61	61	61	61	61	61	61	61	61	61	61	61	61	56	60	56	52	59	52	48	58	49	45	57	47	42
				Exposed	61	61	61	61	61	61	61	61	61	61	61	61	61	61	61	61	61	58	61	59	55	61	57	52	61	52	48	61	48	44	60	45	41	58	42	0	55	0	0	52	0	0
		10:12	39.8	Non-Exposed	64	64	64	64	64	64	64	64	64	64	64	64	64	64	64	64	64	64	64	64	64	64	64	64	64	64	61	64	60	56	62	56	52	61	52	48	60	49	45	59	47	42
				Exposed	64	64	64	64	64	64	64	64	64	64	64	64	64	64	61	64	62	58	64	59	55	64	57	52	64	52	48	64	48	44	62	45	41	58	42	0	55	0	0	52	0	0
		11:12	42.5	Non-Exposed	67	67	67	67	67	67	67	67	67	67	67	67	67	67	67	67	67	67	67	67	67	67	67	67	67	65	61	66	60	56	65	56	52	64	52	48	62	49	45	61	47	42
				Exposed	67	67	67	67	67	67	67	67	67	67	67	64	67	65	61	67	62	58	67	59	55	67	56	52	67	52	48	66	48	44	62	45	41	58	42	0	55	0	0	52	0	0
		12:12	45	Non-Exposed	71	71	71	71	71	71	71	71	71	71	71	71	71	71	71	71	71	71	71	71	70	71	71	67	70	65	61	69	60	56	67	56	52	66	52	48	64	49	45	63	46	42
				Exposed	71	71	71	71	71	71	71	71	68	71	68	64	71	65	61	71	62	58	71	59	55	71	56	52	70	52	48	66	48	44	62	45	41	58	42	0	55	0	0	52	0	0

Tamarack 2.3 Rail – Hip Flush-Mount on 30 Foot Maximum Mean Roof Height – Landscape – Panel Width = 40 Inches or Less

Ground Snow Load	Exposure Category	Roof Pitch	Roof Angle	Wind Speed (mph)	95			100			105			110			115			120			125			130			140			150			160			170			180			190		
				Roof Area	1	2	3	1	2	3	1	2	3	1	2	3	1	2	3	1	2	3	1	2	3	1	2	3	1	2	3	1	2	3	1	2	3	1	2	3	1	2	3	1	2	3
70	B	2:12	9.5	Non-Exposed	49	49	49	49	49	49	49	49	49	49	49	49	49	49	49	49	49	49	49	49	49	49	49	49	49	49	49	49	49	49	49	49	49	49	49	49	49	49	49	49	49	49
				Exposed	49	49	49	49	49	49	49	49	49	49	49	49	49	49	49	49	49	49	49	49	49	49	49	49	49	49	49	49	49	49	49	49	49	49	49	49	49	49	49	49	49	49
		3:12	14.0	Non-Exposed	47	47	47	47	47	47	47	47	47	47	47	47	47	47	47	47	47	47	47	47	47	47	47	47	47	47	47	47	47	47	47	47	47	47	47	47	47	47	47	47	47	47
				Exposed	47	47	47	47	47	47	47	47	47	47	47	47	47	47	47	47	47	47	47	47	47	47	47	47	47	47	47	47	47	47	47	47	47	47	47	47	47	47	47	47	47	47
		4:12	18.4	Non-Exposed	47	47	47	47	47	47	47	47	47	47	47	47	47	47	47	47	47	47	47	47	47	47	47	47	47	47	47	47	47	47	47	47	47	47	47	47	47	47	47	47	47	47
				Exposed	47	47	47	47	47	47	47	47	47	47	47	47	47	47	47	47	47	47	47	47	47	47	47	47	47	47	47	47	47	47	47	47	47	47	47	47	47	47	47	47	47	47
		5:12	22.6	Non-Exposed	48	48		48	48		48	48		48	48		48	48		48	48		48	48		48	48		48	48		48	48		48	48		48	48		48	48		48	48	
				Exposed	48	48		48	48		48	48		48	48		48	48		48	48		48	48		48	48		48	48		48	48		48	48		48	48		48	48		48	48	
		6:12	26.6	Non-Exposed	50	50		50	50		50	50		50	50		50	50		50	50		50	50		50	50		50	50		50	50		50	50		50	50		50	50		50	50	
				Exposed	50	50		50	50		50	50		50	50		50	50		50	50		50	50		50	50		50	50		50	50		50	50		50	50		50	50		50	50	
		7:12	30.3	Non-Exposed	52	52	52	52	52	52	52	52	52	52	52	52	52	52	52	52	52	52	52	52	52	52	52	52	52	52	52	52	52	52	52	52	52	52	52	52	52	52	52	52	52	52
				Exposed	52	52	52	52	52	52	52	52	52	52	52	52	52	52	52	52	52	52	52	52	52	52	52	52	52	52	52	52	52	52	52	52	52	52	52	48	52	49	45	52	49	45
		8:12	33.7	Non-Exposed	54	54	54	54	54	54	54	54	54	54	54	54	54	54	54	54	54	54	54	54	54	54	54	54	54	54	54	54	54	54	54	54	54	54	54	54	54	54	54	54	54	54
				Exposed	54	54	54	54	54	54	54	54	54	54	54	54	54	54	54	54	54	54	54	54	54	54	54	54	54	54	54	54	54	54	54	54	52	54	52	48	54	49	45	54	49	45
		9:12	36.9	Non-Exposed	57	57	57	57	57	57	57	57	57	57	57	57	57	57	57	57	57	57	57	57	57	57	57	57	57	57	57	57	57	57	57	57	57	57	57	57	57	57	57	57	57	57
				Exposed	57	57	57	57	57	57	57	57	57	57	57	57	57	57	57	57	57	57	57	57	57	57	57	57	57	57	57	57	57	57	57	57	55	57	56	51	57	52	48	57	49	45
		10:12	39.8	Non-Exposed	60	60	60	60	60	60	60	60	60	60	60	60	60	60	60	60	60	60	60	60	60	60	60	60	60	60	60	60	60	60	60	60	60	60	60	60	60	60	60	60	60	57
				Exposed	60	60	60	60	60	60	60	60	60	60	60	60	60	60	60	60	60	60	60	60	60	60	60	60	60	60	60	60	60	60	60	60	55	60	56	51	60	52	48	60	49	45
		11:12	42.5	Non-Exposed	63	63	63	63	63	63	63	63	63	63	63	63	63	63	63	63	63	63	63	63	63	63	63	63	63	63	63	63	63	63	63	63	63	63	63	61	63	62	57	63	62	57
				Exposed	63	63	63	63	63	63	63	63	63	63	63	63	63	63	63	63	63	63	63	63	63	63	63	63	63	63	63	63	63	60	63	59	55	63	55	51	63	52	48	63	49	45
		12:12	45	Non-Exposed	66	66	66	66	66	66	66	66	66	66	66	66	66	66	66	66	66	66	66	66	66	66	66	66	66	66	66	66	66	66	66	66	66	66	66	66	66	65	61	66	66	57
				Exposed	66	66	66	66	66	66	66	66	66	66	66	66	66	66	66	66	66	66	66	66	66	66	66	66	66	66	65	66	64	60	66	59	55	66	55	51	66	52	48	66	49	45
	C	2:12	9.5	Non-Exposed	49	49	49	49	49	49	49	49	49	49	49	49	49	49	49	49	49	49	49	49	49	49	49	49	49	49	49	49	49	49	49	49	49	49	49	49	49	49	49	49	49	49
				Exposed	49	49	49	49	49	49	49	49	49	49	49	49	49	49	49	49	49	49	49	49	49	49	49	49	49	49	49	49	49	49	49	49	49	49	49	48	49	48	46	49	45	0
		3:12	14.0	Non-Exposed	47	47	47	47	47	47	47	47	47	47	47	47	47	47	47	47	47	47	47	47	47	47	47	47	47	47	47	47	47	47	47	47	47	47	47	47	47	47	47	47	47	47
				Exposed	47	47	47	47	47	47	47	47	47	47	47	47	47	47	47	47	47	47	47	47	47	47	47	47	47	47	47	47	47	47	47	47	47	47	47	47	47	47	46	47	45	0
		4:12	18.4	Non-Exposed	47	47	47	47	47	47	47	47	47	47	47	47	47	47	47	47	47	47	47	47	47	47	47	47	47	47	47	47	47	47	47	47	47	47	47	47	47	47	47	47	47	47
				Exposed	47	47	47	47	47	47	47	47	47	47	47	47	47	47	47	47	47	47	47	47	47	47	47	47	47	47	47	47	47	47	47	47	47	47	47	47	47	47	46	47	45	0
		5:12	22.6	Non-Exposed	48	48		48	48		48	48		48	48		48	48		48	48		48	48		48	48		48	48		48	48		48	48		48	48		48	48		48	48	
				Exposed	48	48		48	48		48	48		48	48		48	48		48	48		48	48		48	48		48	48		48	48		48	48		48	48		48	48		48	48	
		6:12	26.6	Non-Exposed	50	50		50	50		50	50		50	50		50	50		50	50		50	50		50	50		50	50		50	50		50	50		50	50		50	50		50	50	
				Exposed	50	50		50	50		50	50		50	50		50	50		50	50		50	50		50	50		50	50		50	50		50	50		50	50		50	50		50	49	
		7:12	30.3	Non-Exposed	52	52	52	52	52	52	52	52	52	52	52	52	52	52	52	52	52	52	52	52	52	52	52	52	52	52	52	52	52	52	52	52	52	52	52	50	52	51	47	52	51	47
				Exposed	52	52	52	52	52	52	52	52	52	52	52	52	52	52	52	52	52	52	52	52	52	52	52	52	52	52	52	52	52	49	52	49	45	52	46	42	52	44	0	52	0	0
		8:12	33.7	Non-Exposed	54	54	54	54	54	54	54	54	54	54	54	54	54	54	54	54	54	54	54	54	54	54	54	54	54	54	54	54	54	54	54	54	54	54	54	50	54	51	47	54	51	47
				Exposed	54	54	54	54	54	54	54	54	54	54	54	54	54	54	54	54	54	54	54	54	53	54	53	49	54	49	45	54	46	42	54	44	0	54	0	0	54	0	0	54	0	0
		9:12	36.9	Non-Exposed	57	57	57	57	57	57	57	57	57	57	57	57	57	57	57	57	57	57	57	57	57	57	57	57	57	57	57	57	57	54	57	54	50	56	51	47	56	0	0	56	0	0
				Exposed	57	57	57	57	57	57	57	57	57	57	57	57	57	57	57	57	57	57	57	57	57	57	57	53	57	53	49	57	49	45	57	46	42	57	44	0	56	0	0	56	0	0
		10:12	39.8	Non-Exposed	60	60	60	60	60	60	60	60	60	60	60	60	60	60	60	60	60	60	60	60	60	60	60	60	60	60	60	60	60	58	60	58	54	59	54	50	58	51	47	58	51	47
				Exposed	60	60	60	60	60	60	60	60	60	60	60	60	60	60	60	60	60	60	60	60	60	60	60	58	60	57	53	60	53	49	60	49	45	60	46	42	59	44	0	57	0	0
		11:12	42.5	Non-Exposed	63	63	63	63	63	63	63	63	63	63	63	63	63	63	63	63	63	63	63	63	63	63	63	63	63	63	63	63	63	62	63	62	58	62	58	54	61	54	50	60	51	47
				Exposed	63	63	63	63	63	63	63	63	63	63	63	63	63	63	63	63	63	63	63	63	61	63	62	58	63	57	53	63	53	49	63	49	45	62	46	42	60	44	0	56	0	0
		12:12	45	Non-Exposed	66	66	66	66	66	66	66	66	66	66	66	66	66	66	66	66	66	66	66	66	66	66	66	66	66	66	66	66	66	62	66	62	58	65	58	53	63	54	50	62	51	47
				Exposed	66	66	66	66	66	66	66	66	66	66	66	66	66	66	66	66	66	64	66	65	61	66	62	58	66	57	53	66	53	49	66	49	45	63	46	42	60	44	0	56	0	0
	D	2:12	9.5	Non-Exposed	49	49	49	49	49	49	49	49	49	49	49	49	49	49	49	49	49	49	49	49	49	49	49	49	49	49	49	49	49	49	49	49	49	49	49	49	49	49	49	49	49	49
				Exposed	49	49	49	49	49	49	49	49	49	49	49	49	49	49	49	49	49	49	49	49	49	49	49	49	49	49	49	49	49	49	49	49	47	49	46	44	49	0	0	48	0	0
		3:12	14.0	Non-Exposed	47	47	47	47	47	47	47	47	47	47	47	47	47	47	47	47	47	47	47	47	47	47	47	47	47	47	47	47	47	47	47	47	47	47	47	47	47	47	47	47	47	47
				Exposed	47	47	47	47	47	47	47	47	47	47	47	47	47	47	47	47	47	47	47	47	47	47	47	47	47	47	47	47	47	47	47	47	47	47	46	44	47	0	0	47	0	0
		4:12	18.4	Non-Exposed	47	47	47	47	47	47	47	47	47	47	47	47	47	47	47	47	47	47	47	47	47	47	47	47	47	47	47	47	47	47	47	47	47	47	47	47	47	47	47	47	47	47
				Exposed	47	47	47	47	47	47	47	47	47	47	47	47	47	47	47	47	47	47	47	47	47	47	47	47	47	47	47	47	47	47	47	47	47	47	46	0	47	0	0	47	0	0
		5:12	22.6	Non-Exposed	48	48		48	48		48	48		48	48		48	48		48	48		48	48		48	48		48	48		48	48		48	48		48	48		48	48		48	48	
				Exposed	48	48		48	48		48	48		48	48		48	48		48	48		48	48		48	48		48	48		48	48		48	48		48	48		48	48		48	45	
		6:12	26.6	Non-Exposed	50	50		50	50		50	50		50	50		50	50		50	50		50	50		50	50		50	50		50	50		50	50		50	50		50	50		50	50	
				Exposed	50	50		50	50		50	50		50	50		50	50		50	50		50	50		50	50		50	50		50	50		50	50		50	50		50	48		50	45	
		7:12	30.3	Non-Exposed	52	52	52	52	52	52	52	52	52	52	52	52	52	52	52	52	52	52	52	52	52	52	52	52	52	52	52	52	52	52	52	52	52	52	52	49	52	49	45	51	47	42
				Exposed	52	52	52	52	52	52	52	52	52	52	52	52	52	52	52	52	52	52	52	52	52	52	52	52	52	52	48	52	48	44	52	45	41	52	43	0	52	0	0	51	0	0
		8:12	33.7	Non-Exposed	54	54	54	54	54	54	54	54	54	54	54	54	54	54	54	54	54	54	54	54	54	54	54	54	54	54	54	54	54	54	54	54	52	54	53	48	53	49	45	53	47	42
				Exposed	54	54	54	54	54	54	54	54	54	54	54	54	54	54	54	54	54	54	54	54	54	54	54	52	54	52	48	54	48	44	54	45	41	54	43	0	53	0	0	52	0	0
		9:12	36.9	Non-Exposed	57	57	57	57	57	57	57	57	57	57	57	57	57	57	57	57	57	57	57	57	57	57	57	57	57	57	57	57	57	56	57	56	52	56	52	48	55	49	45	54	47	42
				Exposed	57	57	57	57	57	57	57	57	57	57	57	57	57	57	57	57	57	57	57	57	55	57	57	52	57	52	48	57	48	44	57	45	41	56	42	0	55	0	0	52	0	0
		10:12	39.8	Non-Exposed	60	60	60	60	60	60	60	60	60	60	60	60	60	60	60	60	60	60	60	60	60	60	60	60	60	60	60	60	60	56	59	56	52	58	52	48	57	49	45	56	47	42
				Exposed	60	60	60	60	60	60	60	60	60	60	60	60	60	60	60	60	60	58	60	59	55	60	57	52	60	52	48	60	48	44	59	45	41	58	42	0	55	0	0	52	0	0
		11:12	42.5	Non-Exposed	63	63	63	63	63	63	63	63	63	63	63	63	63	63	63	63	63	63	63	63	63	63	63	63	63	63	61	63	60	56	62	56	52	61	52	48	59	49	45	58	47	42
				Exposed	63	63	63	63	63	63	63	63	63	63	63	63	63	63	61	63	62	58	63	59	55	63	56	52	63	52	48	63	48	44	62	45	41	58	42	0	55	0	0	52	0	0
		12:12	45	Non-Exposed	66	66	66	66	66	66	66	66	66	66	66	66	66	66	66	66	66	66	66	66	66	66	66	66	66	65	61	65	60	56	64	56	52	63	52	48	62	49	45	60	46	42
				Exposed	66	66	66	66	66	66	66	66	66	66	66	64	66	65	61	66	62	58	66	59	55	66	56	52	66	52	48	65	48	44	62	45	41	58	42	0	55	0	0	52	0	0

Tamarack 2.3 Rail – Hip Flush-Mount on 30 Foot Maximum Mean Roof Height – Landscape – Panel Width = 40 Inches or Less

Ground Snow Load	Exposure Category	Roof Pitch	Roof Angle	Wind Speed (mph)	95			100			105			110			115			120			125			130			140			150			160			170			180			190		
				Roof Area	1	2	3	1	2	3	1	2	3	1	2	3	1	2	3	1	2	3	1	2	3	1	2	3	1	2	3	1	2	3	1	2	3	1	2	3	1	2	3	1	2	3
80	B	2:12	9.5	Non-Exposed	46	46	46	46	46	46	46	46	46	46	46	46	46	46	46	46	46	46	46	46	46	46	46	46	46	46	46	46	46	46	46	46	46	46	46	46	46	46	46	46	46	46
				Exposed	46	46	46	46	46	46	46	46	46	46	46	46	46	46	46	46	46	46	46	46	46	46	46	46	46	46	46	46	46	46	46	46	46	46	46	46	46	46	46	46	46	46
		3:12	14.0	Non-Exposed	44	44	44	44	44	44	44	44	44	44	44	44	44	44	44	44	44	44	44	44	44	44	44	44	44	44	44	44	44	44	44	44	44	44	44	44	44	44	44	44	44	44
				Exposed	44	44	44	44	44	44	44	44	44	44	44	44	44	44	44	44	44	44	44	44	44	44	44	44	44	44	44	44	44	44	44	44	44	44	44	44	44	44	44	44	44	44
		4:12	18.4	Non-Exposed	44	44	44	44	44	44	44	44	44	44	44	44	44	44	44	44	44	44	44	44	44	44	44	44	44	44	44	44	44	44	44	44	44	44	44	44	44	44	44	44	44	44
				Exposed	44	44	44	44	44	44	44	44	44	44	44	44	44	44	44	44	44	44	44	44	44	44	44	44	44	44	44	44	44	44	44	44	44	44	44	44	44	44	44	44	44	44
		5:12	22.6	Non-Exposed	45	45		45	45		45	45		45	45		45	45		45	45		45	45		45	45		45	45		45	45		45	45		45	45		45	45		45	45	
				Exposed	45	45		45	45		45	45		45	45		45	45		45	45		45	45		45	45		45	45		45	45		45	45		45	45		45	45		45	45	
		6:12	26.6	Non-Exposed	47	47		47	47		47	47		47	47		47	47		47	47		47	47		47	47		47	47		47	47		47	47		47	47		47	47		47	47	
				Exposed	47	47		47	47		47	47		47	47		47	47		47	47		47	47		47	47		47	47		47	47		47	47		47	47		47	47		47	47	
		7:12	30.3	Non-Exposed	49	49	49	49	49	49	49	49	49	49	49	49	49	49	49	49	49	49	49	49	49	49	49	49	49	49	49	49	49	49	49	49	49	49	49	49	49	49	49	49	49	49
				Exposed	49	49	49	49	49	49	49	49	49	49	49	49	49	49	49	49	49	49	49	49	49	49	49	49	49	49	49	49	49	49	49	49	49	49	49	48	49	49	45	49	49	45
		8:12	33.7	Non-Exposed	51	51	51	51	51	51	51	51	51	51	51	51	51	51	51	51	51	51	51	51	51	51	51	51	51	51	51	51	51	51	51	51	51	51	51	51	51	51	51	51	51	51
				Exposed	51	51	51	51	51	51	51	51	51	51	51	51	51	51	51	51	51	51	51	51	51	51	51	51	51	51	51	51	51	51	51	51	51	51	51	48	51	49	45	51	49	45
		9:12	36.9	Non-Exposed	53	53	53	53	53	53	53	53	53	53	53	53	53	53	53	53	53	53	53	53	53	53	53	53	53	53	53	53	53	53	53	53	53	53	53	53	53	53	53	53	53	53
				Exposed	53	53	53	53	53	53	53	53	53	53	53	53	53	53	53	53	53	53	53	53	53	53	53	53	53	53	53	53	53	53	53	53	53	53	52	48	53	49	45	53	49	45
		10:12	39.8	Non-Exposed	56	56	56	56	56	56	56	56	56	56	56	56	56	56	56	56	56	56	56	56	56	56	56	56	56	56	56	56	56	56	56	56	56	56	56	54	56	54	50	55	51	47
				Exposed	56	56	56	56	56	56	56	56	56	56	56	56	56	56	56	56	56	56	56	56	56	56	56	53	56	53	49	56	49	45	56	46	42	56	44	0	55	0	0	55	0	0
		11:12	42.5	Non-Exposed	59	59	59	59	59	59	59	59	59	59	59	59	59	59	59	59	59	59	59	59	59	59	59	59	59	59	59	59	59	58	59	58	54	58	54	50	57	51	47			
				Exposed	59	59	59	59	59	59	59	59	59	59	59	59	59	59	59	59	59	59	59	59	59	59	59	58	59	57	53	59	53	49	59	49	45	59	46	42	58	44	0	56	0	0
		12:12	45	Non-Exposed	63	63	63	63	63	63	63	63	63	63	63	63	63	63	63	63	63	63	63	63	63	63	63	63	63	63	63	63	63	62	63	62	58	62	58	53	61	54	50	60	51	47
				Exposed	63	63	63	63	63	63	63	63	63	63	63	63	63	63	63	63	63	63	63	63	61	63	62	58	63	57	53	63	53	49	63	49	45	62	46	42	60	44	0	56	0	0
	C	2:12	9.5	Non-Exposed	46	46	46	46	46	46	46	46	46	46	46	46	46	46	46	46	46	46	46	46	46	46	46	46	46	46	46	46	46	46	46	46	46	46	46	46	46	46	46	46	46	46
				Exposed	46	46	46	46	46	46	46	46	46	46	46	46	46	46	46	46	46	46	46	46	46	46	46	46	46	46	46	46	46	46	46	46	46	46	46	46	46	46	45	0		
		3:12	14.0	Non-Exposed	44	44	44	44	44	44	44	44	44	44	44	44	44	44	44	44	44	44	44	44	44	44	44	44	44	44	44	44	44	44	44	44	44	44	44	44	44	44	44	44	44	44
				Exposed	44	44	44	44	44	44	44	44	44	44	44	44	44	44	44	44	44	44	44	44	44	44	44	44	44	44	44	44	44	44	44	44	44	44	44	44	44	44	44	0		
		4:12	18.4	Non-Exposed	44	44	44	44	44	44	44	44	44	44	44	44	44	44	44	44	44	44	44	44	44	44	44	44	44	44	44	44	44	44	44	44	44	44	44	44	44	44	44	44	44	44
				Exposed	44	44	44	44	44	44	44	44	44	44	44	44	44	44	44	44	44	44	44	44	44	44	44	44	44	44	44	44	44	44	44	44	44	44	44	44	44	44	44	0		
		5:12	22.6	Non-Exposed	45	45		45	45		45	45		45	45		45	45		45	45		45	45		45	45		45	45		45	45		45	45		45	45		45	45		45	45	
				Exposed	45	45		45	45		45	45		45	45		45	45		45	45		45	45		45	45		45	45		45	45		45	45		45	45		45	45		45	45	
		6:12	26.6	Non-Exposed	47	47		47	47		47	47		47	47		47	47		47	47		47	47		47	47		47	47		47	47		47	47		47	47		47	47		47	47	
				Exposed	47	47		47	47		47	47		47	47		47	47		47	47		47	47		47	47		47	47		47	47		47	47		47	47		47	47		47	47	
		7:12	30.3	Non-Exposed	49	49	49	49	49	49	49	49	49	49	49	49	49	49	49	49	49	49	49	49	49	49	49	49	49	49	49	49	49	49	49	49	49	49	49	49	49	49	47			
				Exposed	49	49	49	49	49	49	49	49	49	49	49	49	49	49	49	49	49	49	49	49	49	49	49	49	49	49	49	49	49	45	49	46	42	49	44	0	49	0	0			
		8:12	33.7	Non-Exposed	51	51	51	51	51	51	51	51	51	51	51	51	51	51	51	51	51	51	51	51	51	51	51	51	51	51	51	51	51	51	51	51	50	51	51	47						
				Exposed	51	51	51	51	51	51	51	51	51	51	51	51	51	51	51	51	51	51	51	51	51	51	51	51	51	51	51	49	51	49	45	51	46	42	51	44	0	51	0	0			
		9:12	36.9	Non-Exposed	53	53	53	53	53	53	53	53	53	53	53	53	53	53	53	53	53	53	53	53	53	53	53	53	53	53	53	53	53	53	53	53	50	53	51	47						
				Exposed	53	53	53	53	53	53	53	53	53	53	53	53	53	53	53	53	53	53	53	53	53	53	53	53	53	53	53	49	53	49	45	53	46	42	53	44	0	53	0	0			
		10:12	39.8	Non-Exposed	56	56	56	56	56	56	56	56	56	56	56	56	56	56	56	56	56	56	56	56	56	56	56	56	56	56	56	56	56	56	56	56	50	55	51	47						
				Exposed	56	56	56	56	56	56	56	56	56	56	56	56	56	56	56	56	56	56	56	56	56	56	56	53	56	53	49	56	49	45	56	46	42	56	44	0	55	0	0			
		11:12	42.5	Non-Exposed	59	59	59	59	59	59	59	59	59	59	59	59	59	59	59	59	59	59	59	59	59	59	59	59	59	59	59	59	59	58	59	58	54	58	54	50	57	51	47			
				Exposed	59	59	59	59	59	59	59	59	59	59	59	59	59	59	59	59	59	59	59	59	59	59	59	58	59	57	53	59	53	49	59	49	45	59	46	42	58	44	0	56	0	0
		12:12	45	Non-Exposed	63	63	63	63	63	63	63	63	63	63	63	63	63	63	63	63	63	63	63	63	63	63	63	63	63	63	63	63	63	62	63	62	58	62	58	53	61	54	50	60	51	47
				Exposed	63	63	63	63	63	63	63	63	63	63	63	63	63	63	63	63	63	63	63	63	61	63	62	58	63	57	53	63	53	49	63	49	45	62	46	42	60	44	0	56	0	0
	D	2:12	9.5	Non-Exposed	46	46	46	46	46	46	46	46	46	46	46	46	46	46	46	46	46	46	46	46	46	46	46	46	46	46	46	46	46	46	46	46	46	46	46	46	46	46	46	46	46	46
				Exposed	46	46	46	46	46	46	46	46	46	46	46	46	46	46	46	46	46	46	46	46	46	46	46	46	46	46	46	46	46	46	46	46	44	46	0	0	46	0	0			
		3:12	14.0	Non-Exposed	44	44	44	44	44	44	44	44	44	44	44	44	44	44	44	44	44	44	44	44	44	44	44	44	44	44	44	44	44	44	44	44	44	44	44	44	44	44	44	44	44	44
				Exposed	44	44	44	44	44	44	44	44	44	44	44	44	44	44	44	44	44	44	44	44	44	44	44	44	44	44	44	44	44	44	44	44	44	44	0	0	44	0	0			
		4:12	18.4	Non-Exposed	44	44	44	44	44	44	44	44	44	44	44	44	44	44	44	44	44	44	44	44	44	44	44	44	44	44	44	44	44	44	44	44	44	44	44	44	44	44	44	44	44	44
				Exposed	44	44	44	44	44	44	44	44	44	44	44	44	44	44	44	44	44	44	44	44	44	44	44	44	44	44	44	44	44	44	44	44	0	44	0	0	44	0	0			
		5:12	22.6	Non-Exposed	45	45		45	45		45	45		45	45		45	45		45	45		45	45		45	45		45	45		45	45		45	45		45	45		45	45		45	45	
				Exposed	45	45		45	45		45	45		45	45		45	45		45	45		45	45		45	45		45	45		45	45		45	45		45	45		45	45		45	45	
		6:12	26.6	Non-Exposed	47	47		47	47		47	47		47	47		47	47		47	47		47	47		47	47		47	47		47	47		47	47		47	47		47	47		47	47	
				Exposed	47	47		47	47		47	47		47	47		47	47		47	47		47	47		47	47		47	47		47	47		47	47		47	47		47	47		47	45	
		7:12	30.3	Non-Exposed	49	49	49	49	49	49	49	49	49	49	49	49	49	49	49	49	49	49	49	49	49	49	49	49	49	49	49	49	49	49	49	49	45	49	47	42						
				Exposed	49	49	49	49	49	49	49	49	49	49	49	49	49	49	49	49	49	49	49	49	49	49	49	49	49	49	48	49	48	44	49	45	41	49	43	0	49	0	0	49	0	0
		8:12	33.7	Non-Exposed	51	51	51	51	51	51	51	51	51	51	51	51	51	51	51	51	51	51	51	51	51	51	51	51	51	51	51	51	51	51	51	51	48	51	49	45	50	47	42			
				Exposed	51	51	51	51	51	51	51	51	51	51	51	51	51	51	51	51	51	51	51	51	51	51	51	51	51	51	48	51	48	44	51	45	41	51	43	0	51	0	0	50	0	0
		9:12	36.9	Non-Exposed	53	53	53	53	53	53	53	53	53	53	53	53	53	53	53	53	53	53	53	53	53	53	53	53	53	53	53	53	53	53	53	53	52	53	52	48	53	49	45	52	47	42
				Exposed	53	53	53	53	53	53	53	53	53	53	53	53	53	53	53	53	53	53	53	53	53	53	53	52	53	52	48	53	48	44	53	45	41	53	42	0	53	0	0	52	0	0
		10:12	39.8	Non-Exposed	56	56	56	56	56	56	56	56	56	56	56	56	56	56	56	56	56	56	56	56	56	56	56	56	56	56	56	56	56	56	56	52	56	52	48	55	49	45	54	47	42	
				Exposed	56	56	56	56	56	56	56	56	56	56	56	56	56	56	56	56	56	56	56	56	55	56	56	52	56	52	48	56	48	44	56	45	41	56	42	0	55	0	0	52	0	0
		11:12	42.5	Non-Exposed	59	59	59	59	59	59	59	59	59	59	59	59	59	59	59	59	59	59	59	59	59	59	59	59	59	59	59	59	59	56	59	56	52	58	52	48	57	49	45	56	47	42
				Exposed	59	59	59	59	59	59	59	59	59	59	59	59	59	59	59	59	59	58	59	59	55	59	56	52	59	52	48	59	48	44	59	45	41	58	42	0	55	0	0	52	0	0
		12:12	45	Non-Exposed	63	63	63	63	63	63	63	63	63	63	63	63	63	63	63	63	63	63	63	63	63	63	63	63	63	63	61	62	60	56	61	56	52	60	52	48	59	49	45	58	46	42
				Exposed	63	63	63	63	63	63	63	63	63	63	63	63	63	63	61	63	62	58	63	59	55	63	56	52	63	52	48	62	48	44	61	45	41	58	42	0	55	0	0	52	0	0

Tamarack 2.3 Rail – Hip Flush-Mount on 30 Foot Maximum Mean Roof Height – Landscape – Panel Width = 40 Inches or Less

Ground Snow Load	Exposure Category	Roof Pitch	Roof Angle	Wind Speed (mph)	95			100			105			110			115			120			125			130			140			150			160			170			180			190		
				Roof Area	1	2	3	1	2	3	1	2	3	1	2	3	1	2	3	1	2	3	1	2	3	1	2	3	1	2	3	1	2	3	1	2	3	1	2	3	1	2	3	1	2	3
90	B	2:12	9.5	Non-Exposed	43	43	43	43	43	43	43	43	43	43	43	43	43	43	43	43	43	43	43	43	43	43	43	43	43	43	43	43	43	43	43	43	43	43	43	43	43	43	43	43	43	43
				Exposed	43	43	43	43	43	43	43	43	43	43	43	43	43	43	43	43	43	43	43	43	43	43	43	43	43	43	43	43	43	43	43	43	43	43	43	43	43	43	43	43	43	43
		3:12	14.0	Non-Exposed	42	42	42	42	42	42	42	42	42	42	42	42	42	42	42	42	42	42	42	42	42	42	42	42	42	42	42	42	42	42	42	42	42	42	42	42	42	42	42	42	42	42
				Exposed	42	42	42	42	42	42	42	42	42	42	42	42	42	42	42	42	42	42	42	42	42	42	42	42	42	42	42	42	42	42	42	42	42	42	42	42	42	42	42	42	42	42
		4:12	18.4	Non-Exposed	42	42	42	42	42	42	42	42	42	42	42	42	42	42	42	42	42	42	42	42	42	42	42	42	42	42	42	42	42	42	42	42	42	42	42	42	42	42	42	42	42	42
				Exposed	42	42	42	42	42	42	42	42	42	42	42	42	42	42	42	42	42	42	42	42	42	42	42	42	42	42	42	42	42	42	42	42	42	42	42	42	42	42	42	42	42	42
		5:12	22.6	Non-Exposed	43	43		43	43		43	43		43	43		43	43		43	43		43	43		43	43		43	43		43	43		43	43		43	43		43	43		43	43	
				Exposed	43	43		43	43		43	43		43	43		43	43		43	43		43	43		43	43		43	43		43	43		43	43		43	43		43	43		43	43	
		6:12	26.6	Non-Exposed	44	44		44	44		44	44		44	44		44	44		44	44		44	44		44	44		44	44		44	44		44	44		44	44		44	44		44	44	
				Exposed	44	44		44	44		44	44		44	44		44	44		44	44		44	44		44	44		44	44		44	44		44	44		44	44		44	44		44	44	
		7:12	30.3	Non-Exposed	46	46	46	46	46	46	46	46	46	46	46	46	46	46	46	46	46	46	46	46	46	46	46	46	46	46	46	46	46	46	46	46	46	46	46	46	46	46	46	46	46	46
				Exposed	46	46	46	46	46	46	46	46	46	46	46	46	46	46	46	46	46	46	46	46	46	46	46	46	46	46	46	46	46	46	46	46	46	46	46	46	46	46	46	46	46	45
		8:12	33.7	Non-Exposed	48	48	48	48	48	48	48	48	48	48	48	48	48	48	48	48	48	48	48	48	48	48	48	48	48	48	48	48	48	48	48	48	48	48	48	48	48	48	48	48	48	48
				Exposed	48	48	48	48	48	48	48	48	48	48	48	48	48	48	48	48	48	48	48	48	48	48	48	48	48	48	48	48	48	48	48	48	48	48	48	48	48	48	48	48	48	45
		9:12	36.9	Non-Exposed	50	50	50	50	50	50	50	50	50	50	50	50	50	50	50	50	50	50	50	50	50	50	50	50	50	50	50	50	50	50	50	50	50	50	50	50	50	50	50	50	50	50
				Exposed	50	50	50	50	50	50	50	50	50	50	50	50	50	50	50	50	50	50	50	50	50	50	50	50	50	50	50	50	50	50	50	50	50	50	50	50	50	50	48	50	49	45
		10:12	39.8	Non-Exposed	53	53	53	53	53	53	53	53	53	53	53	53	53	53	53	53	53	53	53	53	53	53	53	53	53	53	53	53	53	53	53	53	53	53	53	53	53	53	53	53	53	53
				Exposed	53	53	53	53	53	53	53	53	53	53	53	53	53	53	53	53	53	53	53	53	53	53	53	53	53	53	53	53	53	51	53	52	48	53	49	45	53	49	45	53	49	45
		11:12	42.5	Non-Exposed	56	56	56	56	56	56	56	56	56	56	56	56	56	56	56	56	56	56	56	56	56	56	56	56	56	56	56	56	56	56	56	56	56	56	56	56	56	56	56	56	56	56
				Exposed	56	56	56	56	56	56	56	56	56	56	56	56	56	56	56	56	56	56	56	56	56	56	56	56	56	56	56	56	56	55	56	55	51	56	52	48	56	49	45	56	49	45
		12:12	45	Non-Exposed	59	59	59	59	59	59	59	59	59	59	59	59	59	59	59	59	59	59	59	59	59	59	59	59	59	59	59	59	59	59	59	59	59	59	59	59	59	59	57	59	59	57
				Exposed	59	59	59	59	59	59	59	59	59	59	59	59	59	59	59	59	59	59	59	59	59	59	59	59	59	59	59	59	59	55	59	55	51	59	52	48	59	49	45	59	49	45
	C	2:12	9.5	Non-Exposed	43	43	43	43	43	43	43	43	43	43	43	43	43	43	43	43	43	43	43	43	43	43	43	43	43	43	43	43	43	43	43	43	43	43	43	43	43	43	43	43	43	43
				Exposed	43	43	43	43	43	43	43	43	43	43	43	43	43	43	43	43	43	43	43	43	43	43	43	43	43	43	43	43	43	43	43	43	43	43	43	43	43	43	43	43	43	0
		3:12	14.0	Non-Exposed	42	42	42	42	42	42	42	42	42	42	42	42	42	42	42	42	42	42	42	42	42	42	42	42	42	42	42	42	42	42	42	42	42	42	42	42	42	42	42	42	42	42
				Exposed	42	42	42	42	42	42	42	42	42	42	42	42	42	42	42	42	42	42	42	42	42	42	42	42	42	42	42	42	42	42	42	42	42	42	42	42	42	42	42	42	42	0
		4:12	18.4	Non-Exposed	42	42	42	42	42	42	42	42	42	42	42	42	42	42	42	42	42	42	42	42	42	42	42	42	42	42	42	42	42	42	42	42	42	42	42	42	42	42	42	42	42	42
				Exposed	42	42	42	42	42	42	42	42	42	42	42	42	42	42	42	42	42	42	42	42	42	42	42	42	42	42	42	42	42	42	42	42	42	42	42	42	42	42	42	42	42	0
		5:12	22.6	Non-Exposed	43	43		43	43		43	43		43	43		43	43		43	43		43	43		43	43		43	43		43	43		43	43		43	43		43	43		43	43	
				Exposed	43	43		43	43		43	43		43	43		43	43		43	43		43	43		43	43		43	43		43	43		43	43		43	43		43	43		43	43	
		6:12	26.6	Non-Exposed	44	44		44	44		44	44		44	44		44	44		44	44		44	44		44	44		44	44		44	44		44	44		44	44		44	44		44	44	
				Exposed	44	44		44	44		44	44		44	44		44	44		44	44		44	44		44	44		44	44		44	44		44	44		44	44		44	44		44	44	
		7:12	30.3	Non-Exposed	46	46	46	46	46	46	46	46	46	46	46	46	46	46	46	46	46	46	46	46	46	46	46	46	46	46	46	46	46	46	46	46	46	46	46	46	46	46	46	46	46	46
				Exposed	46	46	46	46	46	46	46	46	46	46	46	46	46	46	46	46	46	46	46	46	46	46	46	46	46	46	46	46	46	45	46	46	42	46	44	0	46	0	0	46	0	0
		8:12	33.7	Non-Exposed	48	48	48	48	48	48	48	48	48	48	48	48	48	48	48	48	48	48	48	48	48	48	48	48	48	48	48	48	48	48	48	48	48	48	48	48	48	48	47	48	48	47
				Exposed	48	48	48	48	48	48	48	48	48	48	48	48	48	48	48	48	48	48	48	48	48	48	48	48	48	48	48	48	48	45	48	46	42	48	44	0	48	0	0	48	0	0
		9:12	36.9	Non-Exposed	50	50	50	50	50	50	50	50	50	50	50	50	50	50	50	50	50	50	50	50	50	50	50	50	50	50	50	50	50	50	50	50	50	50	50	50	50	50	47	50	50	47
				Exposed	50	50	50	50	50	50	50	50	50	50	50	50	50	50	50	50	50	50	50	50	50	50	50	50	50	50	50	50	49	45	50	46	42	50	44	0	50	0	0	50	0	0
		10:12	39.8	Non-Exposed	53	53	53	53	53	53	53	53	53	53	53	53	53	53	53	53	53	53	53	53	53	53	53	53	53	53	53	53	53	53	53	53	53	53	53	50	53	51	47	53	51	47
				Exposed	53	53	53	53	53	53	53	53	53	53	53	53	53	53	53	53	53	53	53	53	53	53	53	53	53	53	53	53	49	45	53	46	42	53	44	0	53	0	0	53	0	0
		11:12	42.5	Non-Exposed	56	56	56	56	56	56	56	56	56	56	56	56	56	56	56	56	56	56	56	56	56	56	56	56	56	56	56	56	56	56	56	56	54	56	54	50	55	51	47	55	51	47
				Exposed	56	56	56	56	56	56	56	56	56	56	56	56	56	56	56	56	56	56	56	56	56	56	56	53	56	53	49	56	49	45	56	46	42	56	44	0	55	0	0	55	0	0
		12:12	45	Non-Exposed	59	59	59	59	59	59	59	59	59	59	59	59	59	59	59	59	59	59	59	59	59	59	59	59	59	59	59	59	59	58	59	58	53	58	54	50	58	51	47	58	51	47
				Exposed	59	59	59	59	59	59	59	59	59	59	59	59	59	59	59	59	59	59	59	59	59	59	59	58	59	57	53	59	53	49	59	49	45	59	46	42	58	44	0	56	0	0
	D	2:12	9.5	Non-Exposed	43	43	43	43	43	43	43	43	43	43	43	43	43	43	43	43	43	43	43	43	43	43	43	43	43	43	43	43	43	43	43	43	43	43	43	43	43	43	43	43	43	43
				Exposed	43	43	43	43	43	43	43	43	43	43	43	43	43	43	43	43	43	43	43	43	43	43	43	43	43	43	43	43	43	43	43	43	43	43	43	0	0	43	0	0	43	0
		3:12	14.0	Non-Exposed	42	42	42	42	42	42	42	42	42	42	42	42	42	42	42	42	42	42	42	42	42	42	42	42	42	42	42	42	42	42	42	42	42	42	42	42	42	42	42	42	42	42
				Exposed	42	42	42	42	42	42	42	42	42	42	42	42	42	42	42	42	42	42	42	42	42	42	42	42	42	42	42	42	42	42	42	42	42	42	42	0	0	42	0	0	42	0
		4:12	18.4	Non-Exposed	42	42	42	42	42	42	42	42	42	42	42	42	42	42	42	42	42	42	42	42	42	42	42	42	42	42	42	42	42	42	42	42	42	42	42	42	42	42	42	42	42	42
				Exposed	42	42	42	42	42	42	42	42	42	42	42	42	42	42	42	42	42	42	42	42	42	42	42	42	42	42	42	42	42	42	42	42	0	42	0	0	42	0	0	42	0	0
		5:12	22.6	Non-Exposed	43	43		43	43		43	43		43	43		43	43		43	43		43	43		43	43		43	43		43	43		43	43		43	43		43	43		43	43	
				Exposed	43	43		43	43		43	43		43	43		43	43		43	43		43	43		43	43		43	43		43	43		43	43		43	43		43	43		43	43	
		6:12	26.6	Non-Exposed	44	44		44	44		44	44		44	44		44	44		44	44		44	44		44	44		44	44		44	44		44	44		44	44		44	44		44	44	
				Exposed	44	44		44	44		44	44		44	44		44	44		44	44		44	44		44	44		44	44		44	44		44	44		44	44		44	44		44	44	
		7:12	30.3	Non-Exposed	46	46	46	46	46	46	46	46	46	46	46	46	46	46	46	46	46	46	46	46	46	46	46	46	46	46	46	46	46	46	46	46	46	46	46	45	46	46	42	46	46	42
				Exposed	46	46	46	46	46	46	46	46	46	46	46	46	46	46	46	46	46	46	46	46	46	46	46	46	46	46	46	46	44	46	45	41	46	43	0	46	0	0	46	0	0
		8:12	33.7	Non-Exposed	48	48	48	48	48	48	48	48	48	48	48	48	48	48	48	48	48	48	48	48	48	48	48	48	48	48	48	48	48	48	48	48	48	48	48	45	48	47	42	48	47	42
				Exposed	48	48	48	48	48	48	48	48	48	48	48	48	48	48	48	48	48	48	48	48	48	48	48	48	48	48	48	48	44	48	45	41	48	43	0	48	0	0	48	0	0
		9:12	36.9	Non-Exposed	50	50	50	50	50	50	50	50	50	50	50	50	50	50	50	50	50	50	50	50	50	50	50	50	50	50	50	50	50	50	50	50	50	50	48	50	49	45	50	47	42
				Exposed	50	50	50	50	50	50	50	50	50	50	50	50	50	50	50	50	50	50	50	50	50	50	50	48	50	48	44	50	45	41	50	42	0	50	0	0	50	0	0	50	0	0
		10:12	39.8	Non-Exposed	53	53	53	53	53	53	53	53	53	53	53	53	53	53	53	53	53	53	53	53	53	53	53	53	53	53	53	53	53	52	53	52	48	53	49	45	52	47	42	52	47	42
				Exposed	53	53	53	53	53	53	53	53	53	53	53	53	53	53	53	53	53	53	53	53	53	53	53	52	53	52	48	53	48	44	53	45	41	53	42	0	53	0	0	52	0	0
		11:12	42.5	Non-Exposed	56	56	56	56	56	56	56	56	56	56	56	56	56	56	56	56	56	56	56	56	56	56	56	56	56	56	56	56	56	52	56	52	48	55	49	45	54	47	42	54	47	42
				Exposed	56	56	56	56	56	56	56	56	56	56	56	56	56	56	56	56	56	56	56	56	55	56	56	52	56	52	48	56	48	44	56	45	41	56	42	0	55	0	0	52	0	0
		12:12	45	Non-Exposed	59	59	59	59	59	59	59	59	59	59	59	59	59	59	59	59	59	59	59	59	59	59	59	59	59	59	59	59	56	52	58	52	48	57	49	45	56	46	42	56	46	42
				Exposed	59	59	59	59	59	59	59	59	59	59	59	59	59	59	59	59	59	58	59	59	55	59	56	52	59	52	48	59	48	44	59	45	41	58	42	0	55	0	0	52	0	0

Tamarack 2.3 Rail – Hip Flush-Mount on 30 Foot Maximum Mean Roof Height – Landscape – Panel Width = 40 Inches or Less

Ground Snow Load	Exposure Category	Roof Pitch	Roof Angle	Wind Speed (mph)	95			100			105			110			115			120			125			130			140			150			160			170			180			190		
				Roof Area	1	2	3	1	2	3	1	2	3	1	2	3	1	2	3	1	2	3	1	2	3	1	2	3	1	2	3	1	2	3	1	2	3	1	2	3	1	2	3	1	2	3
	B	2:12	9.5	Non-Exposed	41	41	41	41	41	41	41	41	41	41	41	41	41	41	41	41	41	41	41	41	41	41	41	41	41	41	41	41	41	41	41	41	41	41	41	41	41	41	41	41	41	41
				Exposed	41	41	41	41	41	41	41	41	41	41	41	41	41	41	41	41	41	41	41	41	41	41	41	41	41	41	41	41	41	41	41	41	41	41	41	41	41	41	41	41	41	41
		3:12	14.0	Non-Exposed	40	40	40	40	40	40	40	40	40	40	40	40	40	40	40	40	40	40	40	40	40	40	40	40	40	40	40	40	40	40	40	40	40	40	40	40	40	40	40	40	40	40
				Exposed	40	40	40	40	40	40	40	40	40	40	40	40	40	40	40	40	40	40	40	40	40	40	40	40	40	40	40	40	40	40	40	40	40	40	40	40	40	40	40	40	40	40
		4:12	18.4	Non-Exposed	40	40	40	40	40	40	40	40	40	40	40	40	40	40	40	40	40	40	40	40	40	40	40	40	40	40	40	40	40	40	40	40	40	40	40	40	40	40	40	40	40	40
				Exposed	40	40	40	40	40	40	40	40	40	40	40	40	40	40	40	40	40	40	40	40	40	40	40	40	40	40	40	40	40	40	40	40	40	40	40	40	40	40	40	40	40	40
		5:12	22.6	Non-Exposed	41	41		41	41		41	41		41	41		41	41		41	41		41	41		41	41		41	41		41	41		41	41		41	41		41	41		41	41	
				Exposed	41	41		41	41		41	41		41	41		41	41		41	41		41	41		41	41		41	41		41	41		41	41		41	41		41	41		41	41	
		6:12	26.6	Non-Exposed	42	42		42	42		42	42		42	42		42	42		42	42		42	42		42	42		42	42		42	42		42	42		42	42		42	42		42	42	
				Exposed	42	42		42	42		42	42		42	42		42	42		42	42		42	42		42	42		42	42		42	42		42	42		42	42		42	42		42	42	
		7:12	30.3	Non-Exposed	43	43	43	43	43	43	43	43	43	43	43	43	43	43	43	43	43	43	43	43	43	43	43	43	43	43	43	43	43	43	43	43	43	43	43	43	43	43	43	43	43	43
				Exposed	43	43	43	43	43	43	43	43	43	43	43	43	43	43	43	43	43	43	43	43	43	43	43	43	43	43	43	43	43	43	43	43	43	43	43	43	43	43	43	43	43	43
		8:12	33.7	Non-Exposed	45	45	45	45	45	45	45	45	45	45	45	45	45	45	45	45	45	45	45	45	45	45	45	45	45	45	45	45	45	45	45	45	45	45	45	45	45	45	45	45	45	45
				Exposed	45	45	45	45	45	45	45	45	45	45	45	45	45	45	45	45	45	45	45	45	45	45	45	45	45	45	45	45	45	45	45	45	45	45	45	45	45	45	45	45	45	45
		9:12	36.9	Non-Exposed	48	48	48	48	48	48	48	48	48	48	48	48	48	48	48	48	48	48	48	48	48	48	48	48	48	48	48	48	48	48	48	48	48	48	48	48	48	48	48	48	48	48
				Exposed	48	48	48	48	48	48	48	48	48	48	48	48	48	48	48	48	48	48	48	48	48	48	48	48	48	48	48	48	48	48	48	48	48	48	48	48	48	48	48	48	48	45
		10:12	39.8	Non-Exposed	50	50	50	50	50	50	50	50	50	50	50	50	50	50	50	50	50	50	50	50	50	50	50	50	50	50	50	50	50	50	50	50	50	50	50	50	50	50	50	50	50	50
				Exposed	50	50	50	50	50	50	50	50	50	50	50	50	50	50	50	50	50	50	50	50	50	50	50	50	50	50	50	50	50	48	50	49	48	50	50	48	50	50	48	50	50	45
		11:12	42.5	Non-Exposed	53	53	53	53	53	53	53	53	53	53	53	53	53	53	53	53	53	53	53	53	53	53	53	53	53	53	53	53	53	53	53	53	53	53	53	53	53	53	53	53	53	53
				Exposed	53	53	53	53	53	53	53	53	53	53	53	53	53	53	53	53	53	53	53	53	53	53	53	53	53	53	53	53	53	53	53	53	53	53	53	53	53	53	53	53	53	51
		12:12	45	Non-Exposed	56	56	56	56	56	56	56	56	56	56	56	56	56	56	56	56	56	56	56	56	56	56	56	56	56	56	56	56	56	56	56	56	56	56	56	56	56	56	56	56	56	56
				Exposed	56	56	56	56	56	56	56	56	56	56	56	56	56	56	56	56	56	56	56	56	56	56	56	56	56	56	56	56	56	55	56	55	51	56	52	48	56	49	45	56	49	45
100	C	2:12	9.5	Non-Exposed	41	41	41	41	41	41	41	41	41	41	41	41	41	41	41	41	41	41	41	41	41	41	41	41	41	41	41	41	41	41	41	41	41	41	41	41	41	41	41	41	41	41
				Exposed	41	41	41	41	41	41	41	41	41	41	41	41	41	41	41	41	41	41	41	41	41	41	41	41	41	41	41	41	41	41	41	41	41	41	41	41	41	41	41	41	41	0
		3:12	14.0	Non-Exposed	40	40	40	40	40	40	40	40	40	40	40	40	40	40	40	40	40	40	40	40	40	40	40	40	40	40	40	40	40	40	40	40	40	40	40	40	40	40	40	40	40	40
				Exposed	40	40	40	40	40	40	40	40	40	40	40	40	40	40	40	40	40	40	40	40	40	40	40	40	40	40	40	40	40	40	40	40	40	40	40	40	40	40	40	40	40	0
		4:12	18.4	Non-Exposed	40	40	40	40	40	40	40	40	40	40	40	40	40	40	40	40	40	40	40	40	40	40	40	40	40	40	40	40	40	40	40	40	40	40	40	40	40	40	40	40	40	40
				Exposed	40	40	40	40	40	40	40	40	40	40	40	40	40	40	40	40	40	40	40	40	40	40	40	40	40	40	40	40	40	40	40	40	40	40	40	40	40	40	40	40	40	0
		5:12	22.6	Non-Exposed	41	41		41	41		41	41		41	41		41	41		41	41		41	41		41	41		41	41		41	41		41	41		41	41		41	41		41	41	
				Exposed	41	41		41	41		41	41		41	41		41	41		41	41		41	41		41	41		41	41		41	41		41	41		41	41		41	41		41	41	
		6:12	26.6	Non-Exposed	42	42		42	42		42	42		42	42		42	42		42	42		42	42		42	42		42	42		42	42		42	42		42	42		42	42		42	42	
				Exposed	42	42		42	42		42	42		42	42		42	42		42	42		42	42		42	42		42	42		42	42		42	42		42	42		42	42		42	42	
		7:12	30.3	Non-Exposed	43	43	43	43	43	43	43	43	43	43	43	43	43	43	43	43	43	43	43	43	43	43	43	43	43	43	43	43	43	43	43	43	43	43	43	43	43	43	43	43	43	43
				Exposed	43	43	43	43	43	43	43	43	43	43	43	43	43	43	43	43	43	43	43	43	43	43	43	43	43	43	43	43	43	43	43	43	42	43	43	0	43	0	0	43	0	0
		8:12	33.7	Non-Exposed	45	45	45	45	45	45	45	45	45	45	45	45	45	45	45	45	45	45	45	45	45	45	45	45	45	45	45	45	45	45	45	45	45	45	45	45	45	45	45	45	45	45
				Exposed	45	45	45	45	45	45	45	45	45	45	45	45	45	45	45	45	45	45	45	45	45	45	45	45	45	45	45	45	45	45	45	45	42	45	44	0	45	0	0	45	0	0
		9:12	36.9	Non-Exposed	48	48	48	48	48	48	48	48	48	48	48	48	48	48	48	48	48	48	48	48	48	48	48	48	48	48	48	48	48	48	48	48	48	48	48	48	48	48	48	48	48	47
				Exposed	48	48	48	48	48	48	48	48	48	48	48	48	48	48	48	48	48	48	48	48	48	48	48	48	48	48	48	48	48	45	48	46	42	48	44	0	48	0	0	48	0	0
		10:12	39.8	Non-Exposed	50	50	50	50	50	50	50	50	50	50	50	50	50	50	50	50	50	50	50	50	50	50	50	50	50	50	50	50	50	50	50	50	50	50	50	50	50	50	50	50	50	47
				Exposed	50	50	50	50	50	50	50	50	50	50	50	50	50	50	50	50	50	50	50	50	50	50	50	50	50	50	50	50	50	49	50	49	45	50	46	42	50	44	0	50	0	0
		11:12	42.5	Non-Exposed	53	53	53	53	53	53	53	53	53	53	53	53	53	53	53	53	53	53	53	53	53	53	53	53	53	53	53	53	53	53	53	53	53	53	53	53	53	53	50	53	51	47
				Exposed	53	53	53	53	53	53	53	53	53	53	53	53	53	53	53	53	53	53	53	53	53	53	53	53	53	53	53	53	53	49	53	49	45	53	46	42	53	44	0	53	0	0
		12:12	45	Non-Exposed	56	56	56	56	56	56	56	56	56	56	56	56	56	56	56	56	56	56	56	56	56	56	56	56	56	56	56	56	56	56	56	56	53	56	53	50	56	51	47	56	51	47
				Exposed	56	56	56	56	56	56	56	56	56	56	56	56	56	56	56	56	56	56	56	56	56	56	56	56	56	56	53	56	53	49	56	49	45	56	46	42	56	44	0	56	0	0
	D	2:12	9.5	Non-Exposed	41	41	41	41	41	41	41	41	41	41	41	41	41	41	41	41	41	41	41	41	41	41	41	41	41	41	41	41	41	41	41	41	41	41	41	41	41	41	41	41	41	41
				Exposed	41	41	41	41	41	41	41	41	41	41	41	41	41	41	41	41	41	41	41	41	41	41	41	41	41	41	41	41	41	41	41	41	41	41	41	0	0	41	0	0	41	0
		3:12	14.0	Non-Exposed	40	40	40	40	40	40	40	40	40	40	40	40	40	40	40	40	40	40	40	40	40	40	40	40	40	40	40	40	40	40	40	40	40	40	40	40	40	40	40	40	40	40
				Exposed	40	40	40	40	40	40	40	40	40	40	40	40	40	40	40	40	40	40	40	40	40	40	40	40	40	40	40	40	40	40	40	40	40	40	40	0	0	40	0	0	40	0
		4:12	18.4	Non-Exposed	40	40	40	40	40	40	40	40	40	40	40	40	40	40	40	40	40	40	40	40	40	40	40	40	40	40	40	40	40	40	40	40	40	40	40	40	40	40	40	40	40	40
				Exposed	40	40	40	40	40	40	40	40	40	40	40	40	40	40	40	40	40	40	40	40	40	40	40	40	40	40	40	40	40	40	40	40	0	40	0	0	40	0	0	40	0	0
		5:12	22.6	Non-Exposed	41	41		41	41		41	41		41	41		41	41		41	41		41	41		41	41		41	41		41	41		41	41		41	41		41	41		41	41	
				Exposed	41	41		41	41		41	41		41	41		41	41		41	41		41	41		41	41		41	41		41	41		41	41		41	41		41	41		41	41	
		6:12	26.6	Non-Exposed	42	42		42	42		42	42		42	42		42	42		42	42		42	42		42	42		42	42		42	42		42	42		42	42		42	42		42	42	
				Exposed	42	42		42	42		42	42		42	42		42	42		42	42		42	42		42	42		42	42		42	42		42	42		42	42		42	42		42	42	
		7:12	30.3	Non-Exposed	43	43	43	43	43	43	43	43	43	43	43	43	43	43	43	43	43	43	43	43	43	43	43	43	43	43	43	43	43	43	43	43	43	43	43	43	43	43	43	43	43	42
				Exposed	43	43	43	43	43	43	43	43	43	43	43	43	43	43	43	43	43	43	43	43	43	43	43	43	43	43	43	43	43	41	43	43	0	43	0	0	43	0	0	43	0	0
		8:12	33.7	Non-Exposed	45	45	45	45	45	45	45	45	45	45	45	45	45	45	45	45	45	45	45	45	45	45	45	45	45	45	45	45	45	45	45	45	45	45	45	45	45	45	45	45	45	42
				Exposed	45	45	45	45	45	45	45	45	45	45	45	45	45	45	45	45	45	45	45	45	45	45	45	45	45	45	45	44	45	41	45	43	0	45	0	0	45	0	0	45	0	0
		9:12	36.9	Non-Exposed	48	48	48	48	48	48	48	48	48	48	48	48	48	48	48	48	48	48	48	48	48	48	48	48	48	48	48	48	48	48	48	48	48	48	48	48	48	48	45	48	47	42
				Exposed	48	48	48	48	48	48	48	48	48	48	48	48	48	48	48	48	48	48	48	48	48	48	48	48	48	48	48	44	48	45	41	48	42	0	48	0	0	48	0	0	48	0
		10:12	39.8	Non-Exposed	50	50	50	50	50	50	50	50	50	50	50	50	50	50	50	50	50	50	50	50	50	50	50	50	50	50	50	50	50	50	50	50	48	50	49	45	50	47	42	50	47	42
				Exposed	50	50	50	50	50	50	50	50	50	50	50	50	50	50	50	50	50	50	50	50	50	50	50	50	50	50	48	50	48	44	50	45	41	50	42	0	50	0	0	50	0	0
		11:12	42.5	Non-Exposed	53	53	53	53	53	53	53	53	53	53	53	53	53	53	53	53	53	53	53	53	53	53	53	53	53	53	53	53	53	53	53	53	52	53	52	48	53	49	45	52	47	42
				Exposed	53	53	53	53	53	53	53	53	53	53	53	53	53	53	53	53	53	53	53	53	53	53	53	52	53	52	48	53	48	44	53	45	41	53	42	0	53	0	0	52	0	0
		12:12	45	Non-Exposed	56	56	56	56	56	56	56	56	56	56	56	56	56	56	56	56	56	56	56	56	56	56	56	56	56	56	56	56	56	56	56	56	52	56	52	48	55	49	45	54	46	42
				Exposed	56	56	56	56	56	56	56	56	56	56	56	56	56	56	56	56	56	56	56	56	55	56	56	52	56	52	48	56	48	44	56	45	41	56	42	0	55	0	0	52	0	0

Tamarack 2.3 Rail – Hip Flush-Mount on 30 Foot Maximum Mean Roof Height – Landscape – Panel Width = 40 Inches or Less

Ground Snow Load	Exposure Category	Roof Pitch	Roof Angle	Wind Speed (mph)	95			100			105			110			115			120			125			130			140			150			160			170			180			190		
				Roof Area	1	2	3	1	2	3	1	2	3	1	2	3	1	2	3	1	2	3	1	2	3	1	2	3	1	2	3	1	2	3	1	2	3	1	2	3	1	2	3	1	2	3
110	B	2:12	9.5	Non-Exposed	39	39	39	39	39	39	39	39	39	39	39	39	39	39	39	39	39	39	39	39	39	39	39	39	39	39	39	39	39	39	39	39	39	39	39	39	39	39	39	39	39	39
				Exposed	39	39	39	39	39	39	39	39	39	39	39	39	39	39	39	39	39	39	39	39	39	39	39	39	39	39	39	39	39	39	39	39	39	39	39	39	39	39	39	39	39	39
		3:12	14.0	Non-Exposed	38	38	38	38	38	38	38	38	38	38	38	38	38	38	38	38	38	38	38	38	38	38	38	38	38	38	38	38	38	38	38	38	38	38	38	38	38	38	38	38	38	38
				Exposed	38	38	38	38	38	38	38	38	38	38	38	38	38	38	38	38	38	38	38	38	38	38	38	38	38	38	38	38	38	38	38	38	38	38	38	38	38	38	38	38	38	38
		4:12	18.4	Non-Exposed	38	38	38	38	38	38	38	38	38	38	38	38	38	38	38	38	38	38	38	38	38	38	38	38	38	38	38	38	38	38	38	38	38	38	38	38	38	38	38	38	38	38
				Exposed	38	38	38	38	38	38	38	38	38	38	38	38	38	38	38	38	38	38	38	38	38	38	38	38	38	38	38	38	38	38	38	38	38	38	38	38	38	38	38	38	38	38
		5:12	22.6	Non-Exposed	39	39		39	39		39	39		39	39		39	39		39	39		39	39		39	39		39	39		39	39		39	39		39	39		39	39		39	39	
				Exposed	39	39		39	39		39	39		39	39		39	39		39	39		39	39		39	39		39	39		39	39		39	39		39	39		39	39		39	39	
		6:12	26.6	Non-Exposed	40	40		40	40		40	40		40	40		40	40		40	40		40	40		40	40		40	40		40	40		40	40		40	40		40	40		40	40	
				Exposed	40	40		40	40		40	40		40	40		40	40		40	40		40	40		40	40		40	40		40	40		40	40		40	40		40	40		40	40	
		7:12	30.3	Non-Exposed	41	41	41	41	41	41	41	41	41	41	41	41	41	41	41	41	41	41	41	41	41	41	41	41	41	41	41	41	41	41	41	41	41	41	41	41	41	41	41	41	41	41
				Exposed	41	41	41	41	41	41	41	41	41	41	41	41	41	41	41	41	41	41	41	41	41	41	41	41	41	41	41	41	41	41	41	41	41	41	41	41	41	41	41	41	41	41
		8:12	33.7	Non-Exposed	43	43	43	43	43	43	43	43	43	43	43	43	43	43	43	43	43	43	43	43	43	43	43	43	43	43	43	43	43	43	43	43	43	43	43	43	43	43	43	43	43	43
				Exposed	43	43	43	43	43	43	43	43	43	43	43	43	43	43	43	43	43	43	43	43	43	43	43	43	43	43	43	43	43	43	43	43	43	43	43	43	43	43	43	43	43	43
		9:12	36.9	Non-Exposed	46	46	46	46	46	46	46	46	46	46	46	46	46	46	46	46	46	46	46	46	46	46	46	46	46	46	46	46	46	46	46	46	46	46	46	46	46	46	46	46	46	46
				Exposed	46	46	46	46	46	46	46	46	46	46	46	46	46	46	46	46	46	46	46	46	46	46	46	46	46	46	46	46	46	46	46	46	46	46	46	46	46	46	46	46	45	46
		10:12	39.8	Non-Exposed	48	48	48	48	48	48	48	48	48	48	48	48	48	48	48	48	48	48	48	48	48	48	48	48	48	48	48	48	48	48	48	48	48	48	48	48	48	48	48	48	48	48
				Exposed	48	48	48	48	48	48	48	48	48	48	48	48	48	48	48	48	48	48	48	48	48	48	48	48	48	48	48	48	48	48	48	48	48	48	48	48	48	48	48	48	45	48
		11:12	42.5	Non-Exposed	51	51	51	51	51	51	51	51	51	51	51	51	51	51	51	51	51	51	51	51	51	51	51	51	51	51	51	51	51	51	51	51	51	51	51	51	51	51	51	51	51	51
				Exposed	51	51	51	51	51	51	51	51	51	51	51	51	51	51	51	51	51	51	51	51	51	51	51	51	51	51	51	51	51	49	51	49	45	51	46	42	51	44	0	51	0	0
		12:12	45	Non-Exposed	54	54	54	54	54	54	54	54	54	54	54	54	54	54	54	54	54	54	54	54	54	54	54	54	54	54	54	54	54	54	54	54	54	54	54	53	54	54	50	54	51	47
				Exposed	54	54	54	54	54	54	54	54	54	54	54	54	54	54	54	54	54	54	54	54	54	54	54	53	54	53	49	54	49	45	54	46	42	54	44	0	54	0	0
	C	2:12	9.5	Non-Exposed	39	39	39	39	39	39	39	39	39	39	39	39	39	39	39	39	39	39	39	39	39	39	39	39	39	39	39	39	39	39	39	39	39	39	39	39	39	39	39	39	39	39
				Exposed	39	39	39	39	39	39	39	39	39	39	39	39	39	39	39	39	39	39	39	39	39	39	39	39	39	39	39	39	39	39	39	39	39	39	39	39	39	39	39	39	39	0
		3:12	14.0	Non-Exposed	38	38	38	38	38	38	38	38	38	38	38	38	38	38	38	38	38	38	38	38	38	38	38	38	38	38	38	38	38	38	38	38	38	38	38	38	38	38	38	38	38	38
				Exposed	38	38	38	38	38	38	38	38	38	38	38	38	38	38	38	38	38	38	38	38	38	38	38	38	38	38	38	38	38	38	38	38	38	38	38	38	38	38	38	38	38	0
		4:12	18.4	Non-Exposed	38	38	38	38	38	38	38	38	38	38	38	38	38	38	38	38	38	38	38	38	38	38	38	38	38	38	38	38	38	38	38	38	38	38	38	38	38	38	38	38	38	38
				Exposed	38	38	38	38	38	38	38	38	38	38	38	38	38	38	38	38	38	38	38	38	38	38	38	38	38	38	38	38	38	38	38	38	38	38	38	38	38	38	38	38	38	0
		5:12	22.6	Non-Exposed	39	39		39	39		39	39		39	39		39	39		39	39		39	39		39	39		39	39		39	39		39	39		39	39		39	39		39	39	
				Exposed	39	39		39	39		39	39		39	39		39	39		39	39		39	39		39	39		39	39		39	39		39	39		39	39		39	39		39	39	
		6:12	26.6	Non-Exposed	40	40		40	40		40	40		40	40		40	40		40	40		40	40		40	40		40	40		40	40		40	40		40	40		40	40		40	40	
				Exposed	40	40		40	40		40	40		40	40		40	40		40	40		40	40		40	40		40	40		40	40		40	40		40	40		40	40		40	40	
		7:12	30.3	Non-Exposed	41	41	41	41	41	41	41	41	41	41	41	41	41	41	41	41	41	41	41	41	41	41	41	41	41	41	41	41	41	41	41	41	41	41	41	41	41	41	41	41	41	41
				Exposed	41	41	41	41	41	41	41	41	41	41	41	41	41	41	41	41	41	41	41	41	41	41	41	41	41	41	41	41	41	41	41	41	41	41	41	41	41	41	0	41	0	0
		8:12	33.7	Non-Exposed	43	43	43	43	43	43	43	43	43	43	43	43	43	43	43	43	43	43	43	43	43	43	43	43	43	43	43	43	43	43	43	43	43	43	43	43	43	43	43	43	43	43
				Exposed	43	43	43	43	43	43	43	43	43	43	43	43	43	43	43	43	43	43	43	43	43	43	43	43	43	43	43	43	43	43	43	43	42	43	43	0	43	0	0	43	0	0
		9:12	36.9	Non-Exposed	46	46	46	46	46	46	46	46	46	46	46	46	46	46	46	46	46	46	46	46	46	46	46	46	46	46	46	46	46	46	46	46	46	46	46	46	46	46	46	46	46	46
				Exposed	46	46	46	46	46	46	46	46	46	46	46	46	46	46	46	46	46	46	46	46	46	46	46	46	46	46	46	46	46	46	46	45	42	46	44	0	46	0	0	46	0	0
		10:12	39.8	Non-Exposed	48	48	48	48	48	48	48	48	48	48	48	48	48	48	48	48	48	48	48	48	48	48	48	48	48	48	48	48	48	48	48	48	48	48	48	48	48	48	48	48	48	47
				Exposed	48	48	48	48	48	48	48	48	48	48	48	48	48	48	48	48	48	48	48	48	48	48	48	48	48	48	48	48	48	48	48	45	42	48	44	0	48	0	0	48	0	0
		11:12	42.5	Non-Exposed	51	51	51	51	51	51	51	51	51	51	51	51	51	51	51	51	51	51	51	51	51	51	51	51	51	51	51	51	51	51	51	51	51	51	51	51	51	51	50	51	51	47
				Exposed	51	51	51	51	51	51	51	51	51	51	51	51	51	51	51	51	51	51	51	51	51	51	51	51	51	51	51	51	51	49	51	49	45	51	46	42	51	44	0	51	0	0
		12:12	45	Non-Exposed	54	54	54	54	54	54	54	54	54	54	54	54	54	54	54	54	54	54	54	54	54	54	54	54	54	54	54	54	54	54	54	54	54	54	54	53	54	54	50	54	51	47
				Exposed	54	54	54	54	54	54	54	54	54	54	54	54	54	54	54	54	54	54	54	54	54	54	54	53	54	53	49	54	49	45	54	46	42	54	44	0	54	0	0
	D	2:12	9.5	Non-Exposed	39	39	39	39	39	39	39	39	39	39	39	39	39	39	39	39	39	39	39	39	39	39	39	39	39	39	39	39	39	39	39	39	39	39	39	39	39	39	39	39	39	39
				Exposed	39	39	39	39	39	39	39	39	39	39	39	39	39	39	39	39	39	39	39	39	39	39	39	39	39	39	39	39	39	39	39	39	39	39	39	0	0	39	0	0
		3:12	14.0	Non-Exposed	38	38	38	38	38	38	38	38	38	38	38	38	38	38	38	38	38	38	38	38	38	38	38	38	38	38	38	38	38	38	38	38	38	38	38	38	38	38	38	38	38	38
				Exposed	38	38	38	38	38	38	38	38	38	38	38	38	38	38	38	38	38	38	38	38	38	38	38	38	38	38	38	38	38	38	38	38	38	38	38	0	0	38	0	0
		4:12	18.4	Non-Exposed	38	38	38	38	38	38	38	38	38	38	38	38	38	38	38	38	38	38	38	38	38	38	38	38	38	38	38	38	38	38	38	38	38	38	38	38	38	38	38	38	38	38
				Exposed	38	38	38	38	38	38	38	38	38	38	38	38	38	38	38	38	38	38	38	38	38	38	38	38	38	38	38	38	38	38	38	38	38	38	38	0	38	0	0	38	0	0
		5:12	22.6	Non-Exposed	39	39		39	39		39	39		39	39		39	39		39	39		39	39		39	39		39	39		39	39		39	39		39	39		39	39		39	39	
				Exposed	39	39		39	39		39	39		39	39		39	39		39	39		39	39		39	39		39	39		39	39		39	39		39	39		39	39		39	39	
		6:12	26.6	Non-Exposed	40	40		40	40		40	40		40	40		40	40		40	40		40	40		40	40		40	40		40	40		40	40		40	40		40	40		40	40	
				Exposed	40	40		40	40		40	40		40	40		40	40		40	40		40	40		40	40		40	40		40	40		40	40		40	40		40	40		40	40	
		7:12	30.3	Non-Exposed	41	41	41	41	41	41	41	41	41	41	41	41	41	41	41	41	41	41	41	41	41	41	41	41	41	41	41	41	41	41	41	41	41	41	41	41	41	41	41	41	41	41
				Exposed	41	41	41	41	41	41	41	41	41	41	41	41	41	41	41	41	41	41	41	41	41	41	41	41	41	41	41	41	41	41	41	41	41	41	41	0	41	0	0	41	0	0
		8:12	33.7	Non-Exposed	43	43	43	43	43	43	43	43	43	43	43	43	43	43	43	43	43	43	43	43	43	43	43	43	43	43	43	43	43	43	43	43	43	43	43	43	43	43	43	43	43	42
				Exposed	43	43	43	43	43	43	43	43	43	43	43	43	43	43	43	43	43	43	43	43	43	43	43	43	43	43	43	43	43	43	43	41	43	43	0	43	0	0	43	0	0
		9:12	36.9	Non-Exposed	46	46	46	46	46	46	46	46	46	46	46	46	46	46	46	46	46	46	46	46	46	46	46	46	46	46	46	46	46	46	46	46	46	46	46	46	46	46	45	46	46	42
				Exposed	46	46	46	46	46	46	46	46	46	46	46	46	46	46	46	46	46	46	46	46	46	46	46	46	46	46	44	46	45	41	46	42	0	46	0	0	46	0	0	46	0	0
		10:12	39.8	Non-Exposed	48	48	48	48	48	48	48	48	48	48	48	48	48	48	48	48	48	48	48	48	48	48	48	48	48	48	48	48	48	48	48	48	48	48	48	48	48	48	45	48	47	42
				Exposed	48	48	48	48	48	48	48	48	48	48	48	48	48	48	48	48	48	48	48	48	48	48	48	48	48	48	44	48	45	41	48	42	0	48	0	0	48	0	0	48	0	0
		11:12	42.5	Non-Exposed	51	51	51	51	51	51	51	51	51	51	51	51	51	51	51	51	51	51	51	51	51	51	51	51	51	51	51	51	51	51	51	51	48	51	49	45	50	47	42
				Exposed	51	51	51	51	51	51	51	51	51	51	51	51	51	51	51	51	51	51	51	51	51	51	51	51	51	51	48	51	48	44	51	45	41	51	42	0	51	0	0	50	0	0
		12:12	45	Non-Exposed	54	54	54	54	54	54	54	54	54	54	54	54	54	54	54	54	54	54	54	54	54	54	54	54	54	54	54	54	54	52	54	52	48	53	49	45	52	46	42
				Exposed	54	54	54	54	54	54	54	54	54	54	54	54	54	54	54	54	54	54	54	54	54	54	54	52	54	52	48	54	48	44	54	45	41	54	42	0	53	0	0	52	0	0

Tamarack 2.3 Rail – Hip Flush-Mount on 30 Foot Maximum Mean Roof Height – Landscape – Panel Width = 40 Inches or Less

Ground Snow Load	Exposure Category	Roof Pitch	Roof Angle	Wind Speed (mph)	95			100			105			110			115			120			125			130			140			150			160			170			180			190		
				Roof Area	1	2	3	1	2	3	1	2	3	1	2	3	1	2	3	1	2	3	1	2	3	1	2	3	1	2	3	1	2	3	1	2	3	1	2	3	1	2	3	1	2	3
120	B	2:12	9.5	Non-Exposed	38	38	38	38	38	38	38	38	38	38	38	38	38	38	38	38	38	38	38	38	38	38	38	38	38	38	38	38	38	38	38	38	38	38	38	38	38	38	38	38	38	38
				Exposed	38	38	38	38	38	38	38	38	38	38	38	38	38	38	38	38	38	38	38	38	38	38	38	38	38	38	38	38	38	38	38	38	38	38	38	38	38	38	38	38	38	38
		3:12	14.0	Non-Exposed	36	36	36	36	36	36	36	36	36	36	36	36	36	36	36	36	36	36	36	36	36	36	36	36	36	36	36	36	36	36	36	36	36	36	36	36	36	36	36	36	36	36
				Exposed	36	36	36	36	36	36	36	36	36	36	36	36	36	36	36	36	36	36	36	36	36	36	36	36	36	36	36	36	36	36	36	36	36	36	36	36	36	36	36	36	36	36
		4:12	18.4	Non-Exposed	36	36	36	36	36	36	36	36	36	36	36	36	36	36	36	36	36	36	36	36	36	36	36	36	36	36	36	36	36	36	36	36	36	36	36	36	36	36	36	36	36	36
				Exposed	36	36	36	36	36	36	36	36	36	36	36	36	36	36	36	36	36	36	36	36	36	36	36	36	36	36	36	36	36	36	36	36	36	36	36	36	36	36	36	36	36	36
		5:12	22.6	Non-Exposed	37	37		37	37		37	37		37	37		37	37		37	37		37	37		37	37		37	37		37	37		37	37		37	37		37	37		37	37	
				Exposed	37	37		37	37		37	37		37	37		37	37		37	37		37	37		37	37		37	37		37	37		37	37		37	37		37	37		37	37	
		6:12	26.6	Non-Exposed	38	38		38	38		38	38		38	38		38	38		38	38		38	38		38	38		38	38		38	38		38	38		38	38		38	38		38	38	
				Exposed	38	38		38	38		38	38		38	38		38	38		38	38		38	38		38	38		38	38		38	38		38	38		38	38		38	38		38	38	
		7:12	30.3	Non-Exposed	40	40	40	40	40	40	40	40	40	40	40	40	40	40	40	40	40	40	40	40	40	40	40	40	40	40	40	40	40	40	40	40	40	40	40	40	40	40	40	40	40	40
				Exposed	40	40	40	40	40	40	40	40	40	40	40	40	40	40	40	40	40	40	40	40	40	40	40	40	40	40	40	40	40	40	40	40	40	40	40	40	40	40	40	40	40	40
		8:12	33.7	Non-Exposed	42	42	42	42	42	42	42	42	42	42	42	42	42	42	42	42	42	42	42	42	42	42	42	42	42	42	42	42	42	42	42	42	42	42	42	42	42	42	42	42	42	42
				Exposed	42	42	42	42	42	42	42	42	42	42	42	42	42	42	42	42	42	42	42	42	42	42	42	42	42	42	42	42	42	42	42	42	42	42	42	42	42	42	42	42	42	42
		9:12	36.9	Non-Exposed	44	44	44	44	44	44	44	44	44	44	44	44	44	44	44	44	44	44	44	44	44	44	44	44	44	44	44	44	44	44	44	44	44	44	44	44	44	44	44	44	44	44
				Exposed	44	44	44	44	44	44	44	44	44	44	44	44	44	44	44	44	44	44	44	44	44	44	44	44	44	44	44	44	44	44	44	44	44	44	44	44	44	44	44	44	44	44
		10:12	39.8	Non-Exposed	46	46	46	46	46	46	46	46	46	46	46	46	46	46	46	46	46	46	46	46	46	46	46	46	46	46	46	46	46	46	46	46	46	46	46	46	46	46	46	46	46	46
				Exposed	46	46	46	46	46	46	46	46	46	46	46	46	46	46	46	46	46	46	46	46	46	46	46	46	46	46	46	46	46	46	46	46	46	46	46	46	46	46	46	46	46	46
		11:12	42.5	Non-Exposed	49	49	49	49	49	49	49	49	49	49	49	49	49	49	49	49	49	49	49	49	49	49	49	49	49	49	49	49	49	49	49	49	49	49	49	49	49	49	49	49	49	47
				Exposed	49	49	49	49	49	49	49	49	49	49	49	49	49	49	49	49	49	49	49	49	49	49	49	49	49	49	49	49	49	49	49	49	49	49	46	42	49	44	0	49	0	0
		12:12	45	Non-Exposed	52	52	52	52	52	52	52	52	52	52	52	52	52	52	52	52	52	52	52	52	52	52	52	52	52	52	52	52	52	52	52	52	52	52	52	52	52	52	50	52	51	47
				Exposed	52	52	52	52	52	52	52	52	52	52	52	52	52	52	52	52	52	52	52	52	52	52	52	52	52	52	52	52	52	49	52	49	45	52	46	42	52	44	0	52	0	0
	C	2:12	9.5	Non-Exposed	38	38	38	38	38	38	38	38	38	38	38	38	38	38	38	38	38	38	38	38	38	38	38	38	38	38	38	38	38	38	38	38	38	38	38	38	38	38	38	38	38	38
				Exposed	38	38	38	38	38	38	38	38	38	38	38	38	38	38	38	38	38	38	38	38	38	38	38	38	38	38	38	38	38	38	38	38	38	38	38	38	38	38	38	38	38	0
		3:12	14.0	Non-Exposed	36	36	36	36	36	36	36	36	36	36	36	36	36	36	36	36	36	36	36	36	36	36	36	36	36	36	36	36	36	36	36	36	36	36	36	36	36	36	36	36	36	36
				Exposed	36	36	36	36	36	36	36	36	36	36	36	36	36	36	36	36	36	36	36	36	36	36	36	36	36	36	36	36	36	36	36	36	36	36	36	36	36	36	36	36	36	0
		4:12	18.4	Non-Exposed	36	36	36	36	36	36	36	36	36	36	36	36	36	36	36	36	36	36	36	36	36	36	36	36	36	36	36	36	36	36	36	36	36	36	36	36	36	36	36	36	36	36
				Exposed	36	36	36	36	36	36	36	36	36	36	36	36	36	36	36	36	36	36	36	36	36	36	36	36	36	36	36	36	36	36	36	36	36	36	36	36	36	36	36	36	36	0
		5:12	22.6	Non-Exposed	37	37		37	37		37	37		37	37		37	37		37	37		37	37		37	37		37	37		37	37		37	37		37	37		37	37		37	37	
				Exposed	37	37		37	37		37	37		37	37		37	37		37	37		37	37		37	37		37	37		37	37		37	37		37	37		37	37		37	37	
		6:12	26.6	Non-Exposed	38	38		38	38		38	38		38	38		38	38		38	38		38	38		38	38		38	38		38	38		38	38		38	38		38	38		38	38	
				Exposed	38	38		38	38		38	38		38	38		38	38		38	38		38	38		38	38		38	38		38	38		38	38		38	38		38	38		38	38	
		7:12	30.3	Non-Exposed	40	40	40	40	40	40	40	40	40	40	40	40	40	40	40	40	40	40	40	40	40	40	40	40	40	40	40	40	40	40	40	40	40	40	40	40	40	40	40	40	40	40
				Exposed	40	40	40	40	40	40	40	40	40	40	40	40	40	40	40	40	40	40	40	40	40	40	40	40	40	40	40	40	40	40	40	40	40	40	40	0	40	40	0	40	0	0
		8:12	33.7	Non-Exposed	42	42	42	42	42	42	42	42	42	42	42	42	42	42	42	42	42	42	42	42	42	42	42	42	42	42	42	42	42	42	42	42	42	42	42	42	42	42	42	42	42	42
				Exposed	42	42	42	42	42	42	42	42	42	42	42	42	42	42	42	42	42	42	42	42	42	42	42	42	42	42	42	42	42	42	42	42	42	42	42	0	42	42	0	42	0	0
		9:12	36.9	Non-Exposed	44	44	44	44	44	44	44	44	44	44	44	44	44	44	44	44	44	44	44	44	44	44	44	44	44	44	44	44	44	44	44	44	44	44	44	44	44	44	44	44	44	44
				Exposed	44	44	44	44	44	44	44	44	44	44	44	44	44	44	44	44	44	44	44	44	44	44	44	44	44	44	44	44	44	44	44	44	44	44	42	44	44	0	44	0	0
		10:12	39.8	Non-Exposed	46	46	46	46	46	46	46	46	46	46	46	46	46	46	46	46	46	46	46	46	46	46	46	46	46	46	46	46	46	46	46	46	46	46	46	46	46	46	46	46	46	46
				Exposed	46	46	46	46	46	46	46	46	46	46	46	46	46	46	46	46	46	46	46	46	46	46	46	46	46	46	46	46	46	45	46	46	42	46	46	42	46	44	0	46	0	0
		11:12	42.5	Non-Exposed	49	49	49	49	49	49	49	49	49	49	49	49	49	49	49	49	49	49	49	49	49	49	49	49	49	49	49	49	49	49	49	49	49	49	49	49	49	49	49	49	49	47
				Exposed	49	49	49	49	49	49	49	49	49	49	49	49	49	49	49	49	49	49	49	49	49	49	49	49	49	49	49	49	49	45	49	46	42	49	44	0	49	0	0	49	0	0
		12:12	45	Non-Exposed	52	52	52	52	52	52	52	52	52	52	52	52	52	52	52	52	52	52	52	52	52	52	52	52	52	52	52	52	52	52	52	52	52	52	52	48	52	49	45	51	46	42
				Exposed	52	52	52	52	52	52	52	52	52	52	52	52	52	52	52	52	52	52	52	52	52	52	52	52	52	52	52	52	52	49	52	45	41	52	42	0	52	0	0	51	0	0
	D	2:12	9.5	Non-Exposed	38	38	38	38	38	38	38	38	38	38	38	38	38	38	38	38	38	38	38	38	38	38	38	38	38	38	38	38	38	38	38	38	38	38	38	38	38	38	38	38	38	38
				Exposed	38	38	38	38	38	38	38	38	38	38	38	38	38	38	38	38	38	38	38	38	38	38	38	38	38	38	38	38	38	38	38	38	38	38	38	38	38	0	0	38	0	0
		3:12	14.0	Non-Exposed	36	36	36	36	36	36	36	36	36	36	36	36	36	36	36	36	36	36	36	36	36	36	36	36	36	36	36	36	36	36	36	36	36	36	36	36	36	36	36	36	36	36
				Exposed	36	36	36	36	36	36	36	36	36	36	36	36	36	36	36	36	36	36	36	36	36	36	36	36	36	36	36	36	36	36	36	36	36	36	36	0	36	0	0	36	0	0
		4:12	18.4	Non-Exposed	36	36	36	36	36	36	36	36	36	36	36	36	36	36	36	36	36	36	36	36	36	36	36	36	36	36	36	36	36	36	36	36	36	36	36	36	36	36	36	36	36	36
				Exposed	36	36	36	36	36	36	36	36	36	36	36	36	36	36	36	36	36	36	36	36	36	36	36	36	36	36	36	36	36	36	36	36	36	36	36	0	36	0	0	36	0	0
		5:12	22.6	Non-Exposed	37	37		37	37		37	37		37	37		37	37		37	37		37	37		37	37		37	37		37	37		37	37		37	37		37	37		37	37	
				Exposed	37	37		37	37		37	37		37	37		37	37		37	37		37	37		37	37		37	37		37	37		37	37		37	37		37	37		37	37	
		6:12	26.6	Non-Exposed	38	38		38	38		38	38		38	38		38	38		38	38		38	38		38	38		38	38		38	38		38	38		38	38		38	38		38	38	
				Exposed	38	38		38	38		38	38		38	38		38	38		38	38		38	38		38	38		38	38		38	38		38	38		38	38		38	38		38	38	
		7:12	30.3	Non-Exposed	40	40	40	40	40	40	40	40	40	40	40	40	40	40	40	40	40	40	40	40	40	40	40	40	40	40	40	40	40	40	40	40	40	40	40	40	40	40	40	40	40	40
				Exposed	40	40	40	40	40	40	40	40	40	40	40	40	40	40	40	40	40	40	40	40	40	40	40	40	40	40	40	40	40	40	40	40	40	40	40	0	40	0	0	40	0	0
		8:12	33.7	Non-Exposed	42	42	42	42	42	42	42	42	42	42	42	42	42	42	42	42	42	42	42	42	42	42	42	42	42	42	42	42	42	42	42	42	42	42	42	42	42	42	42	42	42	42
				Exposed	42	42	42	42	42	42	42	42	42	42	42	42	42	42	42	42	42	42	42	42	42	42	42	42	42	42	42	42	42	41	42	42	0	42	0	0	42	0	0	42	0	0
		9:12	36.9	Non-Exposed	44	44	44	44	44	44	44	44	44	44	44	44	44	44	44	44	44	44	44	44	44	44	44	44	44	44	44	44	44	44	44	44	44	44	44	44	44	44	44	44	44	42
				Exposed	44	44	44	44	44	44	44	44	44	44	44	44	44	44	44	44	44	44	44	44	44	44	44	44	44	44	44	44	44	41	44	42	0	44	0	0	44	0	0	44	0	0
		10:12	39.8	Non-Exposed	46	46	46	46	46	46	46	46	46	46	46	46	46	46	46	46	46	46	46	46	46	46	46	46	46	46	46	46	46	46	46	46	46	46	46	45	46	46	42	46	46	42
				Exposed	46	46	46	46	46	46	46	46	46	46	46	46	46	46	46	46	46	46	46	46	46	46	46	46	46	46	46	46	46	41	46	42	0	46	0	0	46	0	0	46	0	0
		11:12	42.5	Non-Exposed	49	49	49	49	49	49	49	49	49	49	49	49	49	49	49	49	49	49	49	49	49	49	49	49	49	49	49	49	49	49	49	49	48	49	49	45	49	47	42	49	47	42
				Exposed	49	49	49	49	49	49	49	49	49	49	49	49	49	49	49	49	49	49	49	49	49	49	49	49	49	49	49	49	49	41	49	42	0	49	0	0	49	0	0	49	0	0
		12:12	45	Non-Exposed	52	52	52	52	52	52	52	52	52	52	52	52	52	52	52	52	52	52	52	52	52	52	52	52	52	52	52	52	52	52	52	52	48	52	49	45	51	46	42	51	46	42
				Exposed	52	52	52	52	52	52	52	52	52	52	52	52	52	52	52	52	52	52	52	52	52	52	52	52	52	52	52	52	52	41	52	42	0	52	0	0	51	0	0	51	0	0

Tamarack 2.3 Rail – Gable Flush-Mount on 30 Foot Maximum Mean Roof Height – Landscape – Panel Width = 45 Inches or Less

Ground Snow Load	Exposure Category	Roof Pitch	Roof Angle	Wind Speed (mph)	95			100			105			110			115			120			125			130			140			150			160			170			180			190		
				Roof Area	1	2	3	1	2	3	1	2	3	1	2	3	1	2	3	1	2	3	1	2	3	1	2	3	1	2	3	1	2	3	1	2	3	1	2	3	1	2	3	1	2	3
0	B	Flat	0	Non-Exposed	96	96	96	96	96	96	96	96	96	96	96	96	96	96	96	96	96	93	96	96	88	96	96	83	96	93	76	96	85	70	95	79	64	88	73	60	82	68	57	77	64	54
				Exposed	96	96	96	96	96	90	96	96	85	96	96	80	96	92	75	96	87	71	96	83	68	96	79	65	96	72	60	96	66	56	96	62	52	96	58	49	96	55	46	96	52	0
		1:12	4.8	Non-Exposed	96	96	96	96	96	96	96	96	96	96	96	96	96	96	96	96	96	92	96	96	87	96	96	83	96	92	76	96	85	69	94	78	64	88	73	60	82	68	57	76	64	54
				Exposed	96	96	96	96	96	90	96	96	84	96	96	79	96	92	75	96	87	71	96	83	68	96	79	65	96	72	60	96	66	55	96	62	52	96	58	49	96	55	0	96	52	0
		2:12	9.5	Non-Exposed	96	96	96	96	96	96	96	96	96	96	96	96	96	96	91	96	96	86	96	92	82	96	87	78	96	79	70	90	72	64	83	67	60	78	62	56	73	58	53	69	55	50
				Exposed	96	96	90	96	94	84	96	89	79	96	83	74	96	79	70	96	74	66	96	71	63	96	67	60	96	61	56	96	57	52	96	54	49	96	50	46	96	47	0	96	0	0
		3:12	14.0	Non-Exposed	96	96	96	96	96	96	96	96	96	96	96	96	96	96	91	96	96	86	96	91	81	96	87	77	96	79	70	89	72	64	83	66	60	78	62	56	73	58	53	68	55	50
				Exposed	96	96	89	96	94	83	96	88	78	96	83	74	96	78	70	96	74	66	96	70	63	96	67	60	96	61	56	96	57	52	96	53	49	96	50	46	96	47	0	96	0	0
		4:12	18.4	Non-Exposed	96	96	96	96	96	96	96	96	96	96	96	96	96	96	90	96	96	85	96	91	81	96	86	77	96	78	70	89	72	64	83	66	60	77	62	56	72	58	53	68	55	50
				Exposed	96	96	89	96	93	83	96	88	78	96	82	73	96	78	69	96	74	66	96	70	63	96	67	60	96	61	56	96	57	52	96	53	49	96	50	46	96	47	0	96	0	0
		5:12	22.6	Non-Exposed	96	96	96	96	96	96	96	96	96	96	96	96	96	96	96	96	96	96	96	96	92	96	96	88	96	87	79	96	80	73	96	74	67	90	69	62	85	64	58	80	60	55
				Exposed	96	96	96	96	96	95	96	96	89	96	92	84	96	87	79	96	82	75	96	78	71	96	74	67	96	68	61	96	62	57	96	58	53	96	55	49	96	52	46	96	49	0
		6:12	26.6	Non-Exposed	96	96	96	96	96	96	96	96	96	96	96	96	96	96	96	96	96	96	96	96	92	96	96	87	96	87	79	96	80	72	96	74	67	90	68	62	84	64	58	80	60	54
				Exposed	96	96	96	96	96	94	96	96	88	96	91	83	96	86	79	96	82	74	96	78	71	96	74	67	96	68	61	96	62	57	96	58	53	96	55	49	96	52	46	96	49	0
		7:12	30.3	Non-Exposed	96	96	96	96	96	96	96	96	96	96	96	96	96	96	96	96	96	96	96	96	96	96	96	95	96	96	87	96	91	80	91	84	73	84	78	68	78	73	64	73	68	60
				Exposed	96	96	96	96	96	96	96	96	96	96	96	91	96	96	86	96	93	82	96	89	78	96	84	74	96	77	68	96	71	62	96	66	58	96	61	54	94	58	51	90	55	48
		8:12	33.7	Non-Exposed	96	96	96	96	96	96	96	96	96	96	96	96	96	96	96	96	96	96	96	96	96	96	96	94	96	96	86	96	90	79	91	84	73	84	78	68	78	73	64	73	68	60
				Exposed	96	96	96	96	96	96	96	96	96	96	96	90	96	96	86	96	93	81	96	88	77	96	84	74	96	77	67	96	71	62	96	65	58	96	61	54	94	58	51	89	55	48
		9:12	36.9	Non-Exposed	96	96	96	96	96	96	96	96	96	96	96	96	96	96	96	96	96	96	96	96	96	96	96	94	96	96	86	96	90	79	90	83	73	84	77	68	78	72	63	73	68	60
				Exposed	96	96	96	96	96	96	96	96	95	96	96	90	96	96	85	96	92	81	96	88	77	96	84	73	96	77	67	96	71	62	96	65	58	96	61	54	93	58	51	89	55	48
		10:12	39.8	Non-Exposed	96	96	96	96	96	96	96	96	96	96	96	96	96	96	96	96	96	96	96	96	96	96	96	93	96	96	86	96	90	79	90	83	73	83	77	68	78	72	63	72	68	60
				Exposed	96	96	96	96	96	96	96	96	95	96	96	90	96	96	85	96	92	81	96	88	77	96	84	73	96	76	67	96	70	62	96	65	58	96	61	54	93	58	51	89	55	48
		11:12	42.5	Non-Exposed	96	96	96	96	96	96	96	96	96	96	96	96	96	96	96	96	96	96	96	96	96	96	96	93	96	96	85	96	89	79	90	83	73	83	77	68	77	72	63	72	68	60
				Exposed	96	96	96	96	96	96	96	96	94	96	96	89	96	96	85	96	92	80	96	87	77	96	83	73	96	76	67	96	70	62	96	65	58	96	61	54	93	58	51	88	55	48
		12:12	45	Non-Exposed	96	96	96	96	96	96	96	96	96	96	96	96	96	96	96	96	96	96	96	96	96	96	96	93	96	96	85	96	89	78	89	83	73	83	77	67	77	72	63	72	67	59
				Exposed	96	96	96	96	96	96	96	96	94	96	96	89	96	96	84	96	91	80	96	87	76	96	83	73	96	76	67	96	70	62	96	65	58	96	61	54	93	58	51	88	55	48
	C	Flat	0	Non-Exposed	96	96	96	96	96	94	96	96	88	96	96	83	96	96	79	96	91	75	96	87	71	96	82	67	91	75	62	83	69	58	77	64	54	71	60	51	67	57	48	63	53	0
				Exposed	96	95	78	96	89	73	96	84	68	96	79	65	96	75	61	96	71	59	96	67	56	96	64	54	96	59	50	96	55	47	96	52	0	96	49	0	96	0	0	96	0	0
		1:12	4.8	Non-Exposed	96	96	96	96	96	94	96	96	88	96	96	83	96	96	78	96	91	74	96	86	71	96	82	67	90	75	62	83	69	57	77	64	54	71	60	51	66	56	48	62	53	0
				Exposed	96	94	77	96	88	72	96	83	68	96	79	64	96	74	61	96	71	59	96	67	56	96	64	54	96	59	50	96	55	47	96	52	0	96	49	0	96	0	0	96	0	0
		2:12	9.5	Non-Exposed	96	96	94	96	96	88	96	93	82	96	87	77	96	82	73	96	78	69	91	74	66	87	70	63	80	64	58	74	59	54	69	55	51	64	52	47	61	49	0	57	47	0
				Exposed	96	81	72	96	76	67	96	71	63	96	67	60	96	63	58	96	61	55	96	58	53	96	56	51	96	52	47	96	48	0	96	0	0	96	0	0	96	0	0	0	0	0
		3:12	14.0	Non-Exposed	96	96	93	96	96	87	96	92	82	96	87	77	96	82	73	95	77	69	91	73	65	87	70	62	80	64	58	74	59	54	69	55	50	64	52	47	60	49	0	57	46	0
				Exposed	96	80	72	96	75	67	96	71	63	96	67	60	96	63	57	96	60	55	96	58	53	96	56	51	96	52	47	96	48	0	96	0	0	96	0	0	96	0	0	0	0	0
		4:12	18.4	Non-Exposed	96	96	93	96	96	87	96	91	81	96	86	77	96	81	72	95	77	69	90	73	65	86	70	62	79	63	58	74	59	54	68	55	50	64	52	47	60	49	0	57	46	0
				Exposed	96	80	71	96	75	67	96	71	63	96	66	60	96	63	57	96	60	55	96	58	53	96	56	51	96	52	47	96	48	0	96	0	0	96	0	0	96	0	0	0	0	0
		5:12	22.6	Non-Exposed	96	96	96	96	96	96	96	96	93	96	96	87	96	91	82	96	86	78	96	82	74	96	78	70	93	71	64	86	65	59	80	61	55	75	57	51	70	54	48	66	51	45
				Exposed	96	89	81	96	84	76	96	79	71	96	74	67	96	70	63	96	67	60	96	63	58	96	61	55	96	56	51	96	53	47	96	49	43	96	46	0	96	0	0	96	0	0
		6:12	26.6	Non-Exposed	96	96	96	96	96	96	96	96	92	96	95	87	96	90	82	96	85	78	96	81	74	96	77	70	93	71	64	86	65	59	80	60	55	75	57	51	70	54	48	66	51	45
				Exposed	96	89	81	96	83	76	96	78	71	96	74	67	96	70	63	96	66	60	96	63	57	96	61	55	96	56	50	96	53	47	96	49	0	96	46	0	96	0	0	96	0	0
		7:12	30.3	Non-Exposed	96	96	96	96	96	96	96	96	96	96	96	95	96	96	90	96	96	85	96	92	81	96	88	77	87	80	70	80	74	65	73	68	60	68	64	56	63	60	53	60	57	50
				Exposed	96	96	88	96	95	83	96	89	78	96	84	74	96	80	70	96	76	66	96	72	63	96	69	60	96	63	56	95	59	52	90	55	48	85	52	45	80	49	0	76	46	0
		8:12	33.7	Non-Exposed	96	96	96	96	96	96	96	96	96	96	96	94	96	96	89	96	96	85	96	92	81	95	88	77	87	80	70	79	74	65	73	68	60	68	63	56	63	60	53	60	57	50
				Exposed	96	96	88	96	94	83	96	89	78	96	84	74	96	80	70	96	76	66	96	72	63	96	69	60	96	63	56	95	59	52	89	55	48	84	52	45	80	49	0	76	0	0
		9:12	36.9	Non-Exposed	96	96	96	96	96	96	96	96	96	96	96	94	96	96	89	96	96	84	96	91	80	95	87	77	86	80	70	79	73	64	73	68	60	68	63	56	63	60	53	60	57	50
				Exposed	96	96	88	96	94	82	96	88	78	96	84	73	96	79	69	96	75	66	96	72	63	96	68	60	96	63	56	94	59	52	89	55	48	84	52	45	80	49	0	75	0	0
		10:12	39.8	Non-Exposed	96	96	96	96	96	96	96	96	96	96	96	93	96	96	88	96	96	84	96	91	80	94	87	76	86	80	70	79	73	64	73	68	60	67	63	56	63	60	53	60	57	50
				Exposed	96	96	87	96	93	82	96	88	77	96	83	73	96	79	69	96	75	66	96	72	63	96	68	60	96	63	55	94	58	51	89	55	48	84	52	0	79	49	0	75	0	0
		11:12	42.5	Non-Exposed	96	96	96	96	96	96	96	96	96	96	96	93	96	96	88	96	95	84	96	91	80	94	87	76	86	79	70	79	73	64	73	68	60	67	63	56	63	60	53	59	56	50
				Exposed	96	96	87	96	93	82	96	88	77	96	83	73	96	79	69	96	75	66	96	71	63	96	68	60	96	63	55	94	58	51	89	55	48	84	52	0	79	49	0	75	0	0
		12:12	45	Non-Exposed	96	96	96	96	96	96	96	96	96	96	96	93	96	96	88	96	95	84	96	91	80	94	86	76	85	79	70	78	73	64	72	68	60	67	63	56	63	60	52	59	56	49
				Exposed	96	96	87	96	93	82	96	88	77	96	83	73	96	79	69	96	75	66	96	71	63	96	68	60	96	62	55	94	58	51	88	55	48	84	51	0	79	49	0	75	0	0
	D	Flat	0	Non-Exposed	96	96	90	96	96	84	96	96	79	96	91	75	96	86	71	96	82	67	94	78	64	90	74	61	82	68	57	75	63	53	69	59	49	64	55	46	61	52	0	57	49	0
				Exposed	96	85	70	96	80	65	96	75	62	96	71	59	96	67	56	96	64	54	96	61	52	96	59	50	96	55	0	96	51	0	96	47	0	96	0	0	96	0	0	96	0	0
		1:12	4.8	Non-Exposed	96	96	90	96	96	84	96	96	79	96	91	75	96	86	71	96	82	67	94	78	64	89	74	61	81	68	57	75	62	53	69	58	49	64	55	46	60	52	0	57	49	0
				Exposed	96	85	70	96	80	65	96	75	62	96	71	59	96	67	56	96	64	54	96	61	52	96	59	50	96	54	0	96	51	0	96	47	0	96	0	0	96	0	0	0	0	0
		2:12	9.5	Non-Exposed	96	95	84	96	88	79	96	83	74	96	78	69	91	74	66	87	70	62	83	66	60	79	63	57	73	58	53	67	54	50	63	51	46	59	48	0	56	0	0	53	0	0
				Exposed	96	73	65	96	68	61	96	64	58	96	61	55	96	58	53	96	56	51	96	53	48	96	51	47	96	47	0	96	0	0	96	0	0	96	0	0	0	0	0	0	0	0
		3:12	14.0	Non-Exposed	96	94	84	96	88	78	96	82	73	95	78	69	91	73	65	86	69	62	82	66	60	79	63	57	73	58	53	67	54	49	63	51	46	59	48	0	55	0	0	52	0	0
				Exposed	96	72	64	96	68	61	96	64	58	96	61	55	96	58	53	96	55	50	96	53	48	96	51	47	96	47	0	96	0	0	96	0	0	96	0	0	0	0	0	0	0	0
		4:12	18.4	Non-Exposed	96	93	83	96	87	78	96	82	73	95	77	69	90	73	65	86	69	62	82	66	59	79	63	57	72	58	53	67	54	49	62	51	46	59	48	0	55	0	0	52	0	0
				Exposed	96	72	64	96	67	61	96	63	58	96	60	55	96	58	53	96	55	50	96	53	48	96	51	46	96	47	0	96	0	0	96	0	0	0	0	0	0	0	0	0	0	0
		5:12	22.6	Non-Exposed	96	96	95	96	96	89	96	91	83	96	86	78	96	81	74	96	77	70	96	73	66	92	70	63	85	64	58	78	59	54	73	56	50	68	52	46	64	49	43	60	47	0
				Exposed	96	80	73	96	75	68	96	71	64	96	67	61	96	63	58	96	61	55	96	58	52	96	56	50	96	52	46	96	48	0	96	0	0	96	0	0	96	0	0	91	0	0
		6:12	26.6	Non-Exposed	96	96	94	96	96	88	96	91	83	96	86	78	96	81	74	96	77	70	96	73	66	92	70	63	84	64	58	78	59	53	73	55	50	68	52	46	64	49	0	60	47	0
				Exposed	96	80	73	96	75	68	96	71	64	96	67	60	96	63	57	96	60	55	96	58	52	96	56	50	96	52	46	96	48	0	96	0	0	96	0	0	95	0	0	91	0	0
		7:12	30.3	Non-Exposed	96	96	96	96	96	96	96	96	90	96	96	85	96	92	81	95	88	77	90	83	73	86	79	70	78	73	64	72	67	59	66	62	55	61	58	51	58	55	48	55	52	45
				Exposed	96	91	80	96	85	75	96	80	70	96	76	67	96	72	63	96	68	60	96	65	58	96	62	55	94	58	51	88	54	47	83	51	0	78	48	0	74	0	0	0	0	0
		8:12	33.7	Non-Exposed	96	96	96	96	96	95	96	96	90	96	96	85	96	92	80	95	87	76	90	83	73	86	79	69	78	72	63	71	67	59	66	62	55	61	58	51	58	55	48	55	52	45
				Exposed	96	91	79	96	85	75	96	80	70	96	76	66	96	72	63	96	68	60	96	65	57	96	62	55	94	58	51	88	54	47	83	50	0	78	47	0	73	0	0	0	0	0
		9:12	36.9	Non-Exposed	96	96	96	96	96	95	96	96	89	96	96	85	96	91	80	94	87	76	90	83	73	85	79	69	78	72	63	71	66	59	66	62	55	61	58	51	58	55	48	55	52	45
				Exposed	96	90	79	96	85	74	96	80	70	96	76	66	96	72	63	96	68	60	96	65	57	96	62	55	93	58	51	87	54	47	82	50	0	78	47	0	73	0	0	0	0	0
		10:12	39.8	Non-Exposed	96	96	96	96	96	95	96	96	89	96	96	84	96	91	80	94	87	76	89	82	72	85	79	69	77	72	63	71	66	59	65	62	55	61	58	51	58	55	48	55	52	45
				Exposed	96	90	79	96	84	74	96	80	70	96	75	66	96	71	63	96	68	60	96	65	57	96	62	55	93	58	51	87	54	47	82	50	0	77	47	0	73	0	0	0	0	0
		11:12	42.5	Non-Exposed	96	96	96	96	96	94	96	96	89	96	96	84	96	91	80	94	86	76	89	82	72	85	78	69	77	72	63	71	66	58	65	62	55	61	58	51	58	55	48	55	52	45
				Exposed	96	89	79	96	84	74	96	79	70	96	75	66	96	71	63	96	68	60	96	65	57	96	62	55	93	57	51	87	54	47	82	50	0	77	47	0	73	0	0	0	0	0
		12:12	45	Non-Exposed	96	96	96	96	96	94	96	96	89	96	95	84	96	90	80	93	86	76	89	82	72	84	78	69	77	72	63	71	66	58	65	62	54	61	58	51	58	55	48	55	52	45
				Exposed	96	89	78	96	84	74	96	79	70	96	75	66	96	71	63	96	68	60	96	64	57	96	62	55	92	57	50	87	54	47	82	50	0	77	47	0	73	0	0	0	0	0

Tamarack 2.3 Rail – Gable Flush-Mount on 30 Foot Maximum Mean Roof Height – Landscape – Panel Width = 45 Inches or Less

Ground Snow Load	Exposure Category	Roof Pitch	Roof Angle	Wind Speed (mph)	95			100			105			110			115			120			125			130			140			150			160			170			180			190		
				Roof Area	1	2	3	1	2	3	1	2	3	1	2	3	1	2	3	1	2	3	1	2	3	1	2	3	1	2	3	1	2	3	1	2	3	1	2	3	1	2	3	1	2	3
5	B	Flat	0	Non-Exposed	96	96	96	96	96	96	96	96	96	96	96	96	96	96	96	96	96	93	96	96	88	96	96	83	96	93	76	96	85	70	95	79	64	88	73	60	82	68	57	77	64	54
				Exposed	96	96	96	96	96	90	96	96	85	96	96	80	96	92	75	96	87	71	96	83	68	96	79	65	96	72	60	96	66	56	96	62	52	96	58	49	96	55	46	96	52	0
		1:12	4.8	Non-Exposed	96	96	96	96	96	96	96	96	96	96	96	96	96	96	96	96	96	92	96	96	87	96	96	83	96	92	76	96	85	69	94	78	64	88	73	60	82	68	57	76	64	54
				Exposed	96	96	96	96	96	90	96	96	84	96	96	79	96	92	75	96	87	71	96	83	68	96	79	65	96	72	60	96	66	55	96	62	52	96	58	49	96	55	0	96	52	0
		2:12	9.5	Non-Exposed	96	96	96	96	96	96	96	96	96	96	96	96	96	96	91	96	96	86	96	92	82	96	87	78	96	79	70	90	72	64	83	67	60	78	62	56	73	58	53	69	55	50
				Exposed	96	96	90	96	94	84	96	89	79	96	83	74	96	79	70	96	74	66	96	71	63	96	67	60	96	61	56	96	57	52	96	54	49	96	50	46	96	47	0	96	0	0
		3:12	14.0	Non-Exposed	96	96	96	96	96	96	96	96	96	96	96	96	96	96	91	96	96	86	96	91	81	96	87	77	96	79	70	89	72	64	83	66	60	78	62	56	73	58	53	68	55	50
				Exposed	96	96	89	96	94	83	96	88	78	96	83	74	96	78	70	96	74	66	96	70	63	96	67	60	96	61	56	96	57	52	96	53	49	96	50	46	96	47	0	96	0	0
		4:12	18.4	Non-Exposed	96	96	96	96	96	96	96	96	96	96	96	96	96	96	90	96	96	85	96	91	81	96	86	77	96	78	70	89	72	64	83	66	60	77	62	56	72	58	53	68	55	50
				Exposed	96	96	89	96	93	83	96	88	78	96	82	73	96	78	69	96	74	66	96	70	63	96	67	60	96	61	56	96	57	52	96	53	49	96	50	46	96	47	0	96	0	0
		5:12	22.6	Non-Exposed	96	96	96	96	96	96	96	96	96	96	96	96	96	96	96	96	96	96	96	96	92	96	96	88	96	87	79	96	80	73	96	74	67	90	69	62	85	64	58	80	60	55
				Exposed	96	96	96	96	96	95	96	96	89	96	92	84	96	87	79	96	82	75	96	78	71	96	74	67	96	68	61	96	62	57	96	58	53	96	55	49	96	52	46	96	49	0
		6:12	26.6	Non-Exposed	96	96	96	96	96	96	96	96	96	96	96	96	96	96	96	96	96	96	96	96	92	96	96	87	96	87	79	96	80	72	96	74	67	90	68	62	84	64	58	80	60	54
				Exposed	96	96	96	96	96	94	96	96	88	96	91	83	96	86	79	96	82	74	96	78	71	96	74	67	96	68	61	96	62	57	96	58	53	96	55	49	96	52	46	96	49	0
		7:12	30.3	Non-Exposed	96	96	96	96	96	96	96	96	96	96	96	96	96	96	96	96	96	96	96	96	96	96	96	95	96	96	87	96	91	80	91	84	73	84	78	68	78	73	64	73	68	60
				Exposed	96	96	96	96	96	96	96	96	96	96	96	91	96	96	86	96	93	82	96	89	78	96	84	74	96	77	68	96	71	62	96	66	58	96	61	54	94	58	51	90	55	48
		8:12	33.7	Non-Exposed	96	96	96	96	96	96	96	96	96	96	96	96	96	96	96	96	96	96	96	96	96	96	96	94	96	96	86	96	90	79	91	84	73	84	78	68	78	73	64	73	68	60
				Exposed	96	96	96	96	96	96	96	96	96	96	96	90	96	96	86	96	93	81	96	88	77	96	84	74	96	77	67	96	71	62	96	65	58	96	61	54	94	58	51	89	55	48
		9:12	36.9	Non-Exposed	96	96	96	96	96	96	96	96	96	96	96	96	96	96	96	96	96	96	96	96	96	96	96	94	96	96	86	96	90	79	90	83	73	84	77	68	78	72	63	73	68	60
				Exposed	96	96	96	96	96	96	96	96	95	96	96	90	96	96	85	96	92	81	96	88	77	96	84	73	96	77	67	96	71	62	96	65	58	96	61	54	93	58	51	89	55	48
		10:12	39.8	Non-Exposed	96	96	96	96	96	96	96	96	96	96	96	96	96	96	96	96	96	96	96	96	96	96	96	93	96	96	86	96	90	79	90	83	73	83	77	68	78	72	63	72	68	60
				Exposed	96	96	96	96	96	96	96	96	95	96	96	90	96	96	85	96	92	81	96	88	77	96	84	73	96	76	67	96	70	62	96	65	58	96	61	54	93	58	51	89	55	48
		11:12	42.5	Non-Exposed	96	96	96	96	96	96	96	96	96	96	96	96	96	96	96	96	96	96	96	96	96	96	96	93	96	96	85	96	89	79	90	83	73	83	77	68	77	72	63	72	68	60
				Exposed	96	96	96	96	96	96	96	96	94	96	96	89	96	96	85	96	92	80	96	87	77	96	83	73	96	76	67	96	70	62	96	65	58	96	61	54	93	58	51	88	55	48
		12:12	45	Non-Exposed	96	96	96	96	96	96	96	96	96	96	96	96	96	96	96	96	96	96	96	96	96	96	96	93	96	96	85	96	89	78	89	83	73	83	77	67	77	72	63	72	67	59
				Exposed	96	96	96	96	96	96	96	96	94	96	96	89	96	96	84	96	91	80	96	87	76	96	83	73	96	76	67	96	70	62	96	65	58	96	61	54	93	58	51	88	55	48
	C	Flat	0	Non-Exposed	96	96	96	96	96	94	96	96	88	96	96	83	96	96	79	96	91	75	96	87	71	96	82	67	91	75	62	83	69	58	77	64	54	71	60	51	67	57	48	63	53	0
				Exposed	96	95	78	96	89	73	96	84	68	96	79	65	96	75	61	96	71	59	96	67	56	96	64	54	96	59	50	96	55	47	96	52	0	96	49	0	96	0	0	96	0	0
		1:12	4.8	Non-Exposed	96	96	96	96	96	94	96	96	88	96	96	83	96	96	78	96	91	74	96	86	71	96	82	67	90	75	62	83	69	57	77	64	54	71	60	51	66	56	48	62	53	0
				Exposed	96	94	77	96	88	72	96	83	68	96	79	64	96	74	61	96	71	59	96	67	56	96	64	54	96	59	50	96	55	47	96	52	0	96	49	0	96	0	0	96	0	0
		2:12	9.5	Non-Exposed	96	96	94	96	96	88	96	93	82	96	87	77	96	82	73	96	78	69	91	74	66	87	70	63	80	64	58	74	59	54	69	55	51	64	52	47	61	49	0	57	47	0
				Exposed	96	81	72	96	76	67	96	71	63	96	67	60	96	63	58	96	61	55	96	58	53	96	56	51	96	52	47	96	48	0	96	0	0	96	0	0	96	0	0	0	0	0
		3:12	14.0	Non-Exposed	96	96	93	96	96	87	96	92	82	96	87	77	96	82	73	95	77	69	91	73	65	87	70	62	80	64	58	74	59	54	69	55	50	64	52	47	60	49	0	57	46	0
				Exposed	96	80	72	96	75	67	96	71	63	96	67	60	96	63	57	96	60	55	96	58	53	96	56	51	96	52	47	96	48	0	96	0	0	96	0	0	96	0	0	0	0	0
		4:12	18.4	Non-Exposed	96	96	93	96	96	87	96	91	81	96	86	77	96	81	72	95	77	69	90	73	65	86	70	62	79	63	58	74	59	54	68	55	50	64	52	47	60	49	0	57	46	0
				Exposed	96	80	71	96	75	67	96	71	63	96	66	60	96	63	57	96	60	55	96	58	53	96	56	51	96	52	47	96	48	0	96	0	0	96	0	0	96	0	0	0	0	0
		5:12	22.6	Non-Exposed	96	96	96	96	96	96	96	96	93	96	96	87	96	91	82	96	86	78	96	82	74	96	78	70	93	71	64	86	65	59	80	61	55	75	57	51	70	54	48	66	51	45
				Exposed	96	89	81	96	84	76	96	79	71	96	74	67	96	70	63	96	67	60	96	63	58	96	61	55	96	56	51	96	53	47	96	49	43	96	46	0	96	0	0	96	0	0
		6:12	26.6	Non-Exposed	96	96	96	96	96	96	96	96	92	96	95	87	96	90	82	96	85	78	96	81	74	96	77	70	93	71	64	86	65	59	80	60	55	75	57	51	70	54	48	66	51	45
				Exposed	96	89	81	96	83	76	96	78	71	96	74	67	96	70	63	96	66	60	96	63	57	96	61	55	96	56	50	96	53	47	96	49	0	96	46	0	96	0	0	96	0	0
		7:12	30.3	Non-Exposed	96	96	96	96	96	96	96	96	96	96	96	95	96	96	90	96	96	85	96	92	81	96	88	77	87	80	70	80	74	65	73	68	60	68	64	56	63	60	53	60	57	50
				Exposed	96	96	88	96	95	83	96	89	78	96	84	74	96	80	70	96	76	66	96	72	63	96	69	60	96	63	56	95	59	52	90	55	48	85	52	45	80	49	0	76	46	0
		8:12	33.7	Non-Exposed	96	96	96	96	96	96	96	96	96	96	96	94	96	96	89	96	96	85	96	92	81	95	88	77	87	80	70	79	74	65	73	68	60	68	63	56	63	60	53	60	57	50
				Exposed	96	96	88	96	94	83	96	89	78	96	84	74	96	80	70	96	76	66	96	72	63	96	69	60	96	63	56	95	59	52	89	55	48	84	52	45	80	49	0	76	0	0
		9:12	36.9	Non-Exposed	96	96	96	96	96	96	96	96	96	96	96	94	96	96	89	96	96	84	96	91	80	95	87	77	86	80	70	79	73	64	73	68	60	68	63	56	63	60	53	60	57	50
				Exposed	96	96	88	96	94	82	96	88	78	96	84	73	96	79	69	96	75	66	96	72	63	96	68	60	96	63	56	94	59	52	89	55	48	84	52	45	80	49	0	75	0	0
		10:12	39.8	Non-Exposed	96	96	96	96	96	96	96	96	96	96	96	93	96	96	88	96	96	84	96	91	80	94	87	76	86	80	70	79	73	64	73	68	60	67	63	56	63	60	53	60	57	50
				Exposed	96	96	87	96	93	82	96	88	77	96	83	73	96	79	69	96	75	66	96	72	63	96	68	60	96	63	55	94	58	51	89	55	48	84	52	0	79	49	0	75	0	0
		11:12	42.5	Non-Exposed	96	96	96	96	96	96	96	96	96	96	96	93	96	96	88	96	95	84	96	91	80	94	87	76	86	79	70	79	73	64	73	68	60	67	63	56	63	60	53	59	56	50
				Exposed	96	96	87	96	93	82	96	88	77	96	83	73	96	79	69	96	75	66	96	71	63	96	68	60	96	63	55	94	58	51	89	55	48	84	52	0	79	49	0	75	0	0
		12:12	45	Non-Exposed	96	96	96	96	96	96	96	96	96	96	96	93	96	96	88	96	95	84	96	91	80	94	86	76	85	79	70	78	73	64	72	68	60	67	63	56	63	60	52	59	56	49
				Exposed	96	96	87	96	93	82	96	88	77	96	83	73	96	79	69	96	75	66	96	71	63	96	68	60	96	62	55	94	58	51	88	55	48	84	51	0	79	49	0	75	0	0
	D	Flat	0	Non-Exposed	96	96	90	96	96	84	96	96	79	96	91	75	96	86	71	96	82	67	94	78	64	90	74	61	82	68	57	75	63	53	69	59	49	64	55	46	61	52	0	57	49	0
				Exposed	96	85	70	96	80	65	96	75	62	96	71	59	96	67	56	96	64	54	96	61	52	96	59	50	96	55	0	96	51	0	96	47	0	96	0	0	96	0	0	96	0	0
		1:12	4.8	Non-Exposed	96	96	90	96	96	84	96	96	79	96	91	75	96	86	71	96	82	67	94	78	64	89	74	61	81	68	57	75	62	53	69	58	49	64	55	46	60	52	0	57	49	0
				Exposed	96	85	70	96	80	65	96	75	62	96	71	59	96	67	56	96	64	54	96	61	52	96	59	50	96	54	0	96	51	0	96	47	0	96	0	0	96	0	0	0	0	0
		2:12	9.5	Non-Exposed	96	95	84	96	88	79	96	83	74	96	78	69	91	74	66	87	70	62	83	66	60	79	63	57	73	58	53	67	54	50	63	51	46	59	48	0	56	0	0	53	0	0
				Exposed	96	73	65	96	68	61	96	64	58	96	61	55	96	58	53	96	56	51	96	53	48	96	51	47	96	47	0	96	0	0	96	0	0	96	0	0	0	0	0	0	0	0
		3:12	14.0	Non-Exposed	96	94	84	96	88	78	96	82	73	95	78	69	91	73	65	86	69	62	82	66	60	79	63	57	73	58	53	67	54	49	63	51	46	59	48	0	55	0	0	52	0	0
				Exposed	96	72	64	96	68	61	96	64	58	96	61	55	96	58	53	96	55	50	96	53	48	96	51	47	96	47	0	96	0	0	96	0	0	96	0	0	0	0	0	0	0	0
		4:12	18.4	Non-Exposed	96	93	83	96	87	78	96	82	73	95	77	69	90	73	65	86	69	62	82	66	59	79	63	57	72	58	53	67	54	49	62	51	46	59	48	0	55	0	0	52	0	0
				Exposed	96	72	64	96	67	61	96	63	58	96	60	55	96	58	53	96	55	50	96	53	48	96	51	46	96	47	0	96	0	0	96	0	0	0	0	0	0	0	0	0	0	0
		5:12	22.6	Non-Exposed	96	96	95	96	96	89	96	91	83	96	86	78	96	81	74	96	77	70	96	73	66	92	70	63	85	64	58	78	59	54	73	56	50	68	52	46	64	49	43	60	47	0
				Exposed	96	80	73	96	75	68	96	71	64	96	67	61	96	63	58	96	61	55	96	58	52	96	56	50	96	52	46	96	48	0	96	0	0	96	0	0	95	0	0	91	0	0
		6:12	26.6	Non-Exposed	96	96	94	96	96	88	96	91	83	96	86	78	96	81	74	96	77	70	96	73	66	92	70	63	84	64	58	78	59	53	73	55	50	68	52	46	64	49	0	60	47	0
				Exposed	96	80	73	96	75	68	96	71	64	96	67	60	96	63	57	96	60	55	96	58	52	96	56	50	96	52	46	96	48	0	96	0	0	96	0	0	95	0	0	91	0	0
		7:12	30.3	Non-Exposed	96	96	96	96	96	96	96	96	90	96	96	85	96	92	81	95	88	77	90	83	73	86	79	70	78	73	64	72	67	59	66	62	55	61	58	51	58	55	48	55	52	45
				Exposed	96	91	80	96	85	75	96	80	70	96	76	67	96	72	63	96	68	60	96	65	58	96	62	55	94	58	51	88	54	47	83	51	0	78	48	0	74	0	0	0	0	0
		8:12	33.7	Non-Exposed	96	96	96	96	96	95	96	96	90	96	96	85	96	92	80	95	87	76	90	83	73	86	79	69	78	72	63	71	67	59	66	62	55	61	58	51	58	55	48	55	52	45
				Exposed	96	91	79	96	85	75	96	80	70	96	76	66	96	72	63	96	68	60	96	65	57	96	62	55	94	58	51	88	54	47	83	50	0	78	47	0	73	0	0	0	0	0
		9:12	36.9	Non-Exposed	96	96	96	96	96	95	96	96	89	96	96	85	96	91	80	94	87	76	90	83	73	85	79	69	78	72	63	71	66	59	66	62	55	61	58	51	58	55	48	55	52	45
				Exposed	96	90	79	96	85	74	96	80	70	96	76	66	96	72	63	96	68	60	96	65	57	96	62	55	93	58	51	87	54	47	82	50	0	78	47	0	73	0	0	0	0	0
		10:12	39.8	Non-Exposed	96	96	96	96	96	95	96	96	89	96	96	84	96	91	80	94	87	76	89	82	72	85	79	69	77	72	63	71	66	59	65	62	55	61	58	51	58	55	48	55	52	45
				Exposed	96	90	79	96	84	74	96	80	70	96	75	66	96	71	63	96	68	60	96	65	57	96	62	55	93	58	51	87	54	47	82	50	0	77	47	0	73	0	0	0	0	0
		11:12	42.5	Non-Exposed	96	96	96	96	96	94	96	96	89	96	96	84	96	91	80	94	86	76	89	82	72	85	78	69	77	72	63	71	66	58	65	62	55	61	58	51	58	55	48	55	52	45
				Exposed	96	89	79	96	84	74	96	79	70	96	75	66	96	71	63	96	68	60	96	65	57	96	62	55	93	57	51	87	54	47	82	50	0	77	47	0	73	0	0	0	0	0
		12:12	45	Non-Exposed	96	96	96	96	96	94	96	96	89	96	95	84	96	90	80	93	86	76	89	82	72	84	78	69	77	72	63	71	66	58	65	62	54	61	58	51	58	55	48	55	52	45
				Exposed	96	89	78	96	84	74	96	79	70	96	75	66	96	71	63	96	68	60	96	64	57	96	62	55	92	57	50	87	54	47	82	50	0	77	47	0	73	0	0	0	0	0

Tamarack 2.3 Rail – Gable Flush-Mount on 30 Foot Maximum Mean Roof Height – Landscape – Panel Width = 45 Inches or Less

Ground Snow Load	Exposure Category	Roof Pitch	Roof Angle	Wind Speed (mph)	95			100			105			110			115			120			125			130			140			150			160			170			180			190		
				Roof Area	1	2	3	1	2	3	1	2	3	1	2	3	1	2	3	1	2	3	1	2	3	1	2	3	1	2	3	1	2	3	1	2	3	1	2	3	1	2	3	1	2	3
10	B	Flat	0	Non-Exposed	96	96	96	96	96	96	96	96	96	96	96	96	96	96	96	96	96	93	96	96	88	96	96	83	96	93	76	96	85	70	95	79	64	88	73	60	82	68	57	77	64	54
				Exposed	96	96	96	96	96	90	96	96	85	96	96	80	96	92	75	96	87	71	96	83	68	96	79	65	96	72	60	96	66	56	96	62	52	96	58	49	96	55	46	96	52	0
		1:12	4.8	Non-Exposed	96	96	96	96	96	96	96	96	96	96	96	96	96	96	96	96	96	92	96	96	87	96	96	83	96	92	76	96	85	69	94	78	64	88	73	60	82	68	57	76	64	54
				Exposed	96	96	96	96	96	90	96	96	84	96	96	79	96	92	75	96	87	71	96	83	68	96	79	65	96	72	60	96	66	55	96	62	52	96	58	49	96	55	0	96	52	0
		2:12	9.5	Non-Exposed	93	93	93	93	93	93	93	93	93	93	93	93	93	93	91	93	93	86	93	92	82	93	87	78	93	79	70	90	72	64	83	67	60	78	62	56	73	58	53	69	55	50
				Exposed	93	93	90	93	93	84	93	89	79	93	83	74	93	79	70	93	74	66	93	71	63	93	67	60	93	61	56	93	57	52	93	54	49	93	50	46	93	47	0	92	0	0
		3:12	14.0	Non-Exposed	91	91	91	91	91	91	91	91	91	91	91	91	91	91	91	91	91	86	91	91	81	91	87	77	91	79	70	89	72	64	83	66	60	78	62	56	73	58	53	68	55	50
				Exposed	91	91	89	91	91	83	91	88	78	91	83	74	91	78	70	91	74	66	91	70	63	91	67	60	91	61	56	91	57	52	91	53	49	91	50	46	91	47	0	90	0	0
		4:12	18.4	Non-Exposed	94	94	94	94	94	94	94	94	94	94	94	94	94	94	90	94	94	85	94	91	81	94	86	77	94	78	70	89	72	64	83	66	60	77	62	56	72	58	53	68	55	50
				Exposed	94	94	89	94	93	83	94	88	78	94	82	73	94	78	69	94	74	66	94	70	63	94	67	60	94	61	56	94	57	52	94	53	49	94	50	46	94	47	0	93	0	0
		5:12	22.6	Non-Exposed	94	94	94	94	94	94	94	94	94	94	94	94	94	94	94	94	94	94	94	94	92	94	94	88	94	87	79	94	80	73	94	74	67	90	69	62	85	64	58	80	60	55
				Exposed	94	94	94	94	94	94	94	94	89	94	92	84	94	87	79	94	82	75	94	78	71	94	74	67	94	68	61	94	62	57	94	58	53	94	55	49	94	52	46	93	49	0
		6:12	26.6	Non-Exposed	95	95	95	95	95	95	95	95	95	95	95	95	95	95	95	95	95	95	95	95	92	95	95	87	95	87	79	95	80	72	95	74	67	90	68	62	84	64	58	80	60	54
				Exposed	95	95	95	95	95	94	95	95	88	95	91	83	95	86	79	95	82	74	95	78	71	95	74	67	95	68	61	95	62	57	95	58	53	95	55	49	95	52	46	94	49	0
		7:12	30.3	Non-Exposed	96	96	96	96	96	96	96	96	96	96	96	96	96	96	96	96	96	96	96	96	96	96	96	95	96	96	87	94	91	80	91	84	73	84	78	68	78	73	64	73	68	60
				Exposed	96	96	96	96	96	96	96	96	96	96	96	91	96	96	86	96	93	82	96	89	78	96	84	74	96	77	68	94	71	62	92	66	58	89	61	54	86	58	51	84	55	48
		8:12	33.7	Non-Exposed	96	96	96	96	96	96	96	96	96	96	96	96	96	96	96	96	96	96	96	96	96	96	96	94	96	96	86	96	90	79	91	84	73	84	78	68	78	73	64	73	68	60
				Exposed	96	96	96	96	96	96	96	96	96	96	96	90	96	96	86	96	93	81	96	88	77	96	84	74	96	77	67	96	71	62	93	65	58	90	61	54	87	58	51	85	55	48
		9:12	36.9	Non-Exposed	96	96	96	96	96	96	96	96	96	96	96	96	96	96	96	96	96	96	96	96	96	96	96	94	96	96	86	96	90	79	90	83	73	84	77	68	78	72	63	73	68	60
				Exposed	96	96	96	96	96	96	96	96	95	96	96	90	96	96	85	96	92	81	96	88	77	96	84	73	96	77	67	96	71	62	94	65	58	91	61	54	88	58	51	86	55	48
		10:12	39.8	Non-Exposed	96	96	96	96	96	96	96	96	96	96	96	96	96	96	96	96	96	96	96	96	96	96	96	93	96	96	86	96	90	79	90	83	73	83	77	68	78	72	63	72	68	60
				Exposed	96	96	96	96	96	96	96	96	95	96	96	90	96	96	85	96	92	81	96	88	77	96	84	73	96	76	67	96	70	62	96	65	58	93	61	54	90	58	51	87	55	48
		11:12	42.5	Non-Exposed	96	96	96	96	96	96	96	96	96	96	96	96	96	96	96	96	96	96	96	96	96	96	96	93	96	96	85	96	89	79	90	83	73	83	77	68	77	72	63	72	68	60
				Exposed	96	96	96	96	96	96	96	96	94	96	96	89	96	96	85	96	92	80	96	87	77	96	83	73	96	76	67	96	70	62	96	65	58	94	61	54	91	58	51	88	55	48
		12:12	45	Non-Exposed	96	96	96	96	96	96	96	96	96	96	96	96	96	96	96	96	96	96	96	96	96	96	96	93	96	96	85	96	89	78	89	83	73	83	77	67	77	72	63	72	67	59
				Exposed	96	96	96	96	96	96	96	96	94	96	96	89	96	96	84	96	91	80	96	87	76	96	83	73	96	76	67	96	70	62	96	65	58	95	61	54	92	58	51	88	55	48
	C	Flat	0	Non-Exposed	96	96	96	96	96	94	96	96	88	96	96	83	96	96	79	96	91	75	96	87	71	96	82	67	91	75	62	83	69	58	77	64	54	71	60	51	67	57	48	63	53	0
				Exposed	96	95	78	96	89	73	96	84	68	96	79	65	96	75	61	96	71	59	96	67	56	96	64	54	96	59	50	96	55	47	96	52	0	96	49	0	96	0	0	96	0	0
		1:12	4.8	Non-Exposed	96	96	96	96	96	94	96	96	88	96	96	83	96	96	78	96	91	74	96	86	71	96	82	67	90	75	62	83	69	57	77	64	54	71	60	51	66	56	48	62	53	0
				Exposed	96	94	77	96	88	72	96	83	68	96	79	64	96	74	61	96	71	59	96	67	56	96	64	54	96	59	50	96	55	47	96	52	0	96	49	0	96	0	0	96	0	0
		2:12	9.5	Non-Exposed	93	93	93	93	93	88	93	93	82	93	87	77	93	82	73	93	78	69	91	74	66	87	70	63	80	64	58	74	59	54	69	55	51	64	52	47	61	49	0	57	47	0
				Exposed	93	81	72	93	76	67	93	71	63	93	67	60	93	63	58	93	61	55	93	58	53	93	56	51	93	52	47	93	48	0	92	0	0	90	0	0	88	0	0	0	0	0
		3:12	14.0	Non-Exposed	91	91	91	91	91	87	91	91	82	91	87	77	91	82	73	91	77	69	91	73	65	87	70	62	80	64	58	74	59	54	69	55	50	64	52	47	60	49	0	57	46	0
				Exposed	91	80	72	91	75	67	91	71	63	91	67	60	91	63	57	91	60	55	91	58	53	91	56	51	91	52	47	91	48	0	90	0	0	88	0	0	85	0	0	0	0	0
		4:12	18.4	Non-Exposed	94	94	93	94	94	87	94	91	81	94	86	77	94	81	72	94	77	69	90	73	65	86	70	62	79	63	58	74	59	54	68	55	50	64	52	47	60	49	0	57	46	0
				Exposed	94	80	71	94	75	67	94	71	63	94	66	60	94	63	57	94	60	55	94	58	53	94	56	51	94	52	47	94	48	0	93	0	0	91	0	0	88	0	0	0	0	0
		5:12	22.6	Non-Exposed	94	94	94	94	94	94	94	94	93	94	94	87	94	91	82	94	86	78	94	82	74	94	78	70	93	71	64	86	65	59	80	61	55	75	57	51	70	54	48	66	51	45
				Exposed	94	89	81	94	84	76	94	79	71	94	74	67	94	70	63	94	67	60	94	63	58	94	61	55	94	56	51	94	53	47	94	49	43	91	46	0	89	0	0	86	0	0
		6:12	26.6	Non-Exposed	95	95	95	95	95	95	95	95	92	95	95	87	95	90	82	95	85	78	95	81	74	95	77	70	93	71	64	86	65	59	80	60	55	75	57	51	70	54	48	66	51	45
				Exposed	95	89	81	95	83	76	95	78	71	95	74	67	95	70	63	95	66	60	95	63	57	95	61	55	95	56	50	95	53	47	94	49	0	92	46	0	90	0	0	87	0	0
		7:12	30.3	Non-Exposed	96	96	96	96	96	96	96	96	96	96	96	95	96	96	90	96	96	85	95	92	81	93	88	77	87	80	70	80	74	65	73	68	60	68	64	56	63	60	53	60	57	50
				Exposed	96	96	88	96	95	83	96	89	78	96	84	74	96	80	70	96	76	66	95	72	63	93	69	60	90	63	56	87	59	52	84	55	48	81	52	45	78	49	0	75	46	0
		8:12	33.7	Non-Exposed	96	96	96	96	96	96	96	96	96	96	96	94	96	96	89	96	96	85	96	92	81	95	88	77	87	80	70	79	74	65	73	68	60	68	63	56	63	60	53	60	57	50
				Exposed	96	96	88	96	94	83	96	89	78	96	84	74	96	80	70	96	76	66	96	72	63	95	69	60	91	63	56	88	59	52	85	55	48	82	52	45	79	49	0	76	0	0
		9:12	36.9	Non-Exposed	96	96	96	96	96	96	96	96	96	96	96	94	96	96	89	96	96	84	96	91	80	95	87	77	86	80	70	79	73	64	73	68	60	68	63	56	63	60	53	60	57	50
				Exposed	96	96	88	96	94	82	96	88	78	96	84	73	96	79	69	96	75	66	96	72	63	96	68	60	93	63	56	89	59	52	86	55	48	82	52	45	79	49	0	75	0	0
		10:12	39.8	Non-Exposed	96	96	96	96	96	96	96	96	96	96	96	93	96	96	88	96	96	84	96	91	80	94	87	76	86	80	70	79	73	64	73	68	60	67	63	56	63	60	53	60	57	50
				Exposed	96	96	87	96	93	82	96	88	77	96	83	73	96	79	69	96	75	66	96	72	63	96	68	60	94	63	55	90	58	51	87	55	48	83	52	0	79	49	0	75	0	0
		11:12	42.5	Non-Exposed	96	96	96	96	96	96	96	96	96	96	96	93	96	96	88	96	95	84	96	91	80	94	87	76	86	79	70	79	73	64	73	68	60	67	63	56	63	60	53	59	56	50
				Exposed	96	96	87	96	93	82	96	88	77	96	83	73	96	79	69	96	75	66	96	71	63	96	68	60	95	63	55	91	58	51	88	55	48	84	52	0	79	49	0	75	0	0
		12:12	45	Non-Exposed	96	96	96	96	96	96	96	96	96	96	96	93	96	96	88	96	95	84	96	91	80	94	86	76	85	79	70	78	73	64	72	68	60	67	63	56	63	60	52	59	56	49
				Exposed	96	96	87	96	93	82	96	88	77	96	83	73	96	79	69	96	75	66	96	71	63	96	68	60	96	62	55	93	58	51	88	55	48	84	51	0	79	49	0	75	0	0
	D	Flat	0	Non-Exposed	96	96	90	96	96	84	96	96	79	96	91	75	96	86	71	96	82	67	94	78	64	90	74	61	82	68	57	75	63	53	69	59	49	64	55	46	61	52	0	57	49	0
				Exposed	96	85	70	96	80	65	96	75	62	96	71	59	96	67	56	96	64	54	96	61	52	96	59	50	96	55	0	96	51	0	96	47	0	96	0	0	96	0	0	96	0	0
		1:12	4.8	Non-Exposed	96	96	90	96	96	84	96	96	79	96	91	75	96	86	71	96	82	67	94	78	64	89	74	61	81	68	57	75	62	53	69	58	49	64	55	46	60	52	0	57	49	0
				Exposed	96	85	70	96	80	65	96	75	62	96	71	59	96	67	56	96	64	54	96	61	52	96	59	50	96	54	0	96	51	0	96	47	0	96	0	0	96	0	0	0	0	0
		2:12	9.5	Non-Exposed	93	93	84	93	88	79	93	83	74	93	78	69	91	74	66	87	70	62	83	66	60	79	63	57	73	58	53	67	54	50	63	51	46	59	48	0	56	0	0	53	0	0
				Exposed	93	73	65	93	68	61	93	64	58	93	61	55	93	58	53	93	56	51	93	53	48	93	51	47	93	47	0	92	0	0	89	0	0	87	0	0	0	0	0	0	0	0
		3:12	14.0	Non-Exposed	91	91	84	91	88	78	91	82	73	91	78	69	91	73	65	86	69	62	82	66	60	79	63	57	73	58	53	67	54	49	63	51	46	59	48	0	55	0	0	52	0	0
				Exposed	91	72	64	91	68	61	91	64	58	91	61	55	91	58	53	91	55	50	91	53	48	91	51	47	91	47	0	89	0	0	87	0	0	84	0	0	0	0	0	0	0	0
		4:12	18.4	Non-Exposed	94	93	83	94	87	78	94	82	73	94	77	69	90	73	65	86	69	62	82	66	59	79	63	57	72	58	53	67	54	49	62	51	46	59	48	0	55	0	0	52	0	0
				Exposed	94	72	64	94	67	61	94	63	58	94	60	55	94	58	53	94	55	50	94	53	48	94	51	46	94	47	0	92	0	0	90	0	0	0	0	0	0	0	0	0	0	0
		5:12	22.6	Non-Exposed	94	94	94	94	94	89	94	91	83	94	86	78	94	81	74	94	77	70	94	73	66	92	70	63	85	64	58	78	59	54	73	56	50	68	52	46	64	49	43	60	47	0
				Exposed	94	80	73	94	75	68	94	71	64	94	67	61	94	63	58	94	61	55	94	58	52	94	56	50	94	52	46	93	48	0	90	0	0	88	0	0	85	0	0	83	0	0
		6:12	26.6	Non-Exposed	95	95	94	95	95	88	95	91	83	95	86	78	95	81	74	95	77	70	95	73	66	92	70	63	84	64	58	78	59	53	73	55	50	68	52	46	64	49	0	60	47	0
				Exposed	95	80	73	95	75	68	95	71	64	95	67	60	95	63	57	95	60	55	95	58	52	95	56	50	95	52	46	94	48	0	91	0	0	88	0	0	86	0	0	83	0	0
		7:12	30.3	Non-Exposed	96	96	96	96	96	96	96	96	90	96	96	85	95	92	81	93	88	77	90	83	73	86	79	70	78	73	64	72	67	59	66	62	55	61	58	51	58	55	48	55	52	45
				Exposed	96	91	80	96	85	75	96	80	70	96	76	67	95	72	63	93	68	60	91	65	58	90	62	55	86	58	51	83	54	47	80	51	0	76	48	0	73	0	0	0	0	0
		8:12	33.7	Non-Exposed	96	96	96	96	96	95	96	96	90	96	96	85	96	92	80	94	87	76	90	83	73	86	79	69	78	72	63	71	67	59	66	62	55	61	58	51	58	55	48	55	52	45
				Exposed	96	91	79	96	85	75	96	80	70	96	76	66	96	72	63	94	68	60	93	65	57	91	62	55	87	58	51	84	54	47	80	50	0	77	47	0	73	0	0	0	0	0
		9:12	36.9	Non-Exposed	96	96	96	96	96	95	96	96	89	96	96	85	96	91	80	94	87	76	90	83	73	85	79	69	78	72	63	71	66	59	66	62	55	61	58	51	58	55	48	55	52	45
				Exposed	96	90	79	96	85	74	96	80	70	96	76	66	96	72	63	96	68	60	94	65	57	92	62	55	88	58	51	85	54	47	81	50	0	78	47	0	73	0	0	0	0	0
		10:12	39.8	Non-Exposed	96	96	96	96	96	95	96	96	89	96	96	84	96	91	80	94	87	76	89	82	72	85	79	69	77	72	63	71	66	59	65	62	55	61	58	51	58	55	48	55	52	45
				Exposed	96	90	79	96	84	74	96	80	70	96	75	66	96	71	63	96	68	60	95	65	57	93	62	55	89	58	51	86	54	47	82	50	0	77	47	0	73	0	0	0	0	0
		11:12	42.5	Non-Exposed	96	96	96	96	96	94	96	96	89	96	96	84	96	91	80	94	86	76	89	82	72	85	78	69	77	72	63	71	66	58	65	62	55	61	58	51	58	55	48	55	52	45
				Exposed	96	89	79	96	84	74	96	79	70	96	75	66	96	71	63	96	68	60	96	65	57	95	62	55	91	57	51	87	54	47	82	50	0	77	47	0	73	0	0	0	0	0
		12:12	45	Non-Exposed	96	96	96	96	96	94	96	96	89	96	95	84	96	90	80	93	86	76	89	82	72	84	78	69	77	72	63	71	66	58	65	62	54	61	58	51	58	55	48	55	52	45
				Exposed	96	89	78	96	84	74	96	79	70	96	75	66	96	71	63	96	68	60	96	64	57	96	62	55	92	57	50	87	54	47	82	50	0	77	47	0	73	0	0	0	0	0

Tamarack 2.3 Rail – Gable Flush-Mount on 30 Foot Maximum Mean Roof Height – Landscape – Panel Width = 45 Inches or Less

Ground Snow Load	Exposure Category	Roof Pitch	Roof Angle	Wind Speed (mph)	95			100			105			110			115			120			125			130			140			150			160			170			180			190		
				Roof Area	1	2	3	1	2	3	1	2	3	1	2	3	1	2	3	1	2	3	1	2	3	1	2	3	1	2	3	1	2	3	1	2	3	1	2	3	1	2	3	1	2	3
15	B	Flat	0	Non-Exposed	91	91	91	91	91	91	91	91	91	91	91	91	91	91	91	91	91	91	91	91	88	91	91	83	91	91	76	91	85	70	91	79	64	88	73	60	82	68	57	77	64	54
				Exposed	91	91	91	91	91	90	91	91	85	91	91	80	91	91	75	91	87	71	91	83	68	91	79	65	91	72	60	91	66	56	91	62	52	91	58	49	91	55	46	91	52	0
		1:12	4.8	Non-Exposed	87	87	87	87	87	87	87	87	87	87	87	87	87	87	87	87	87	87	87	87	87	87	87	87	87	87	76	87	85	69	87	78	64	87	73	60	82	68	57	76	64	54
				Exposed	87	87	87	87	87	87	87	87	84	87	87	79	87	87	75	87	87	71	87	83	68	87	79	65	87	72	60	87	66	55	87	62	52	87	58	49	87	55	0	87	52	0
		2:12	9.5	Non-Exposed	84	84	84	84	84	84	84	84	84	84	84	84	84	84	84	84	84	84	84	84	82	84	84	78	84	79	70	84	72	64	83	67	60	78	62	56	73	58	53	69	55	50
				Exposed	84	84	84	84	84	84	84	84	79	84	83	74	84	79	70	84	74	66	84	71	63	84	67	60	84	61	56	84	57	52	84	54	49	84	50	46	84	47	0	82	0	0
		3:12	14.0	Non-Exposed	81	81	81	81	81	81	81	81	81	81	81	81	81	81	81	81	81	81	81	81	81	81	81	77	81	79	70	81	72	64	81	66	60	78	62	56	73	58	53	68	55	50
				Exposed	81	81	81	81	81	81	81	81	78	81	81	74	81	78	70	81	74	66	81	70	63	81	67	60	81	61	56	81	57	52	81	53	49	81	50	46	81	47	0	80	0	0
		4:12	18.4	Non-Exposed	85	85	85	85	85	85	85	85	85	85	85	85	85	85	85	85	85	85	85	85	81	85	85	77	85	78	70	85	72	64	83	66	60	77	62	56	72	58	53	68	55	50
				Exposed	85	85	85	85	85	83	85	85	78	85	82	73	85	78	69	85	74	66	85	70	63	85	67	60	85	61	56	85	57	52	85	53	49	85	50	46	85	47	0	84	0	0
		5:12	22.6	Non-Exposed	86	86	86	86	86	86	86	86	86	86	86	86	86	86	86	86	86	86	86	86	86	86	86	86	86	86	79	86	80	73	86	74	67	86	69	62	85	64	58	80	60	55
				Exposed	86	86	86	86	86	86	86	86	86	86	86	84	86	86	79	86	82	75	86	78	71	86	74	67	86	68	61	86	62	57	86	58	53	86	55	49	86	52	46	85	49	0
		6:12	26.6	Non-Exposed	87	87	87	87	87	87	87	87	87	87	87	87	87	87	87	87	87	87	87	87	87	87	87	87	87	87	79	87	80	72	87	74	67	87	68	62	84	64	58	80	60	54
				Exposed	87	87	87	87	87	87	87	87	87	87	87	83	87	86	79	87	82	74	87	78	71	87	74	67	87	68	61	87	62	57	87	58	53	87	55	49	87	52	46	86	49	0
		7:12	30.3	Non-Exposed	88	88	88	88	88	88	88	88	88	88	88	88	88	88	88	88	88	88	88	88	88	88	88	88	88	88	87	86	86	80	84	84	73	82	78	68	78	73	64	73	68	60
				Exposed	88	88	88	88	88	88	88	88	88	88	88	88	88	88	86	88	88	82	88	88	78	88	84	74	88	77	68	86	71	62	84	66	58	82	61	54	80	58	51	78	55	48
		8:12	33.7	Non-Exposed	90	90	90	90	90	90	90	90	90	90	90	90	90	90	90	90	90	90	90	90	90	90	90	90	90	90	86	88	88	79	86	84	73	83	78	68	78	73	64	73	68	60
				Exposed	90	90	90	90	90	90	90	90	90	90	90	90	90	90	86	90	90	81	90	88	77	90	84	74	90	77	67	88	71	62	86	65	58	83	61	54	81	58	51	79	55	48
		9:12	36.9	Non-Exposed	91	91	91	91	91	91	91	91	91	91	91	91	91	91	91	91	91	91	91	91	91	91	91	91	91	91	86	90	90	79	87	83	73	84	77	68	78	72	63	73	68	60
				Exposed	91	91	91	91	91	91	91	91	91	91	91	90	91	91	85	91	91	81	91	88	77	91	84	73	91	77	67	90	71	62	87	65	58	85	61	54	83	58	51	80	55	48
		10:12	39.8	Non-Exposed	93	93	93	93	93	93	93	93	93	93	93	93	93	93	93	93	93	93	93	93	93	93	93	93	93	93	86	92	90	79	89	83	73	83	77	68	78	72	63	72	68	60
				Exposed	93	93	93	93	93	93	93	93	93	93	93	90	93	93	85	93	92	81	93	88	77	93	84	73	93	76	67	92	70	62	89	65	58	87	61	54	84	58	51	82	55	48
		11:12	42.5	Non-Exposed	95	95	95	95	95	95	95	95	95	95	95	95	95	95	95	95	95	95	95	95	95	95	95	95	95	95	85	94	89	79	90	83	73	83	77	68	77	72	63	72	68	60
				Exposed	95	95	95	95	95	95	95	95	94	95	95	89	95	95	85	95	92	80	95	87	77	95	83	73	95	76	67	94	70	62	91	65	58	88	61	54	86	58	51	83	55	48
		12:12	45	Non-Exposed	96	96	96	96	96	96	96	96	96	96	96	96	96	96	96	96	96	96	96	96	96	96	96	93	96	96	85	96	89	78	89	83	73	83	77	67	77	72	63	72	67	59
				Exposed	96	96	96	96	96	96	96	96	94	96	96	89	96	96	84	96	91	80	96	87	76	96	83	73	96	76	67	96	70	62	93	65	58	90	61	54	87	58	51	84	55	48
	C	Flat	0	Non-Exposed	91	91	91	91	91	91	91	91	88	91	91	83	91	91	79	91	91	75	91	87	71	91	82	67	91	75	62	83	69	58	77	64	54	71	60	51	67	57	48	63	53	0
				Exposed	91	91	78	91	89	73	91	84	68	91	79	65	91	75	61	91	71	59	91	67	56	91	64	54	91	59	50	91	55	47	91	52	0	91	49	0	91	0	0	91	0	0
		1:12	4.8	Non-Exposed	87	87	87	87	87	87	87	87	87	87	87	83	87	87	78	87	87	74	87	86	71	87	82	67	87	75	62	83	69	57	77	64	54	71	60	51	66	56	48	62	53	0
				Exposed	87	87	77	87	87	72	87	83	68	87	79	64	87	74	61	87	71	59	87	67	56	87	64	54	87	59	50	87	55	47	87	52	0	87	49	0	87	0	0	87	0	0
		2:12	9.5	Non-Exposed	84	84	84	84	84	84	84	84	82	84	84	77	84	82	73	84	78	69	84	74	66	84	70	63	80	64	58	74	59	54	69	55	51	64	52	47	61	49	0	57	47	0
				Exposed	84	81	72	84	76	67	84	71	63	84	67	60	84	63	58	84	61	55	84	58	53	84	56	51	84	52	47	84	48	0	83	0	0	81	0	0	79	0	0	0	0	0
		3:12	14.0	Non-Exposed	81	81	81	81	81	81	81	81	81	81	81	77	81	81	73	81	77	69	81	73	65	81	70	62	80	64	58	74	59	54	69	55	50	64	52	47	60	49	0	57	46	0
				Exposed	81	80	72	81	75	67	81	71	63	81	67	60	81	63	57	81	60	55	81	58	53	81	56	51	81	52	47	81	48	0	80	0	0	78	0	0	77	0	0	0	0	0
		4:12	18.4	Non-Exposed	85	85	85	85	85	85	85	85	81	85	85	77	85	81	72	85	77	69	85	73	65	85	70	62	79	63	58	74	59	54	68	55	50	64	52	47	60	49	0	57	46	0
				Exposed	85	80	71	85	75	67	85	71	63	85	66	60	85	63	57	85	60	55	85	58	53	85	56	51	85	52	47	85	48	0	84	0	0	82	0	0	80	0	0	0	0	0
		5:12	22.6	Non-Exposed	86	86	86	86	86	86	86	86	86	86	86	86	86	86	82	86	86	78	86	82	74	86	78	70	86	71	64	86	65	59	80	61	55	75	57	51	70	54	48	66	51	45
				Exposed	86	86	81	86	84	76	86	79	71	86	74	67	86	70	63	86	67	60	86	63	58	86	61	55	86	56	51	86	53	47	85	49	43	83	46	0	81	0	0	79	0	0
		6:12	26.6	Non-Exposed	87	87	87	87	87	87	87	87	87	87	87	87	87	87	82	87	85	78	87	81	74	87	77	70	87	71	64	86	65	59	80	60	55	75	57	51	70	54	48	66	51	45
				Exposed	87	87	81	87	83	76	87	78	71	87	74	67	87	70	63	87	66	60	87	63	57	87	61	55	87	56	50	87	53	47	86	49	0	84	46	0	82	0	0	80	0	0
		7:12	30.3	Non-Exposed	88	88	88	88	88	88	88	88	88	88	88	88	88	88	88	88	88	85	87	87	81	85	85	77	83	80	70	80	74	65	73	68	60	68	64	56	63	60	53	60	57	50
				Exposed	88	88	88	88	88	83	88	88	78	88	84	74	88	80	70	88	76	66	87	72	63	85	69	60	83	63	56	80	59	52	78	55	48	75	52	45	73	49	0	70	46	0
		8:12	33.7	Non-Exposed	90	90	90	90	90	90	90	90	90	90	90	90	90	90	89	90	90	85	88	88	81	87	87	77	84	80	70	79	74	65	73	68	60	68	63	56	63	60	53	60	57	50
				Exposed	90	90	88	90	90	83	90	89	78	90	84	74	90	80	70	90	76	66	88	72	63	87	69	60	84	63	56	82	59	52	79	55	48	76	52	45	74	49	0	71	0	0
		9:12	36.9	Non-Exposed	91	91	91	91	91	91	91	91	91	91	91	91	91	91	89	91	91	84	90	90	80	89	87	77	86	80	70	79	73	64	73	68	60	68	63	56	63	60	53	60	57	50
				Exposed	91	91	88	91	91	82	91	88	78	91	84	73	91	79	69	91	75	66	90	72	63	89	68	60	86	63	56	83	59	52	80	55	48	78	52	45	75	49	0	72	0	0
		10:12	39.8	Non-Exposed	93	93	93	93	93	93	93	93	93	93	93	93	93	93	88	93	93	84	92	91	80	91	87	76	86	80	70	79	73	64	73	68	60	67	63	56	63	60	53	60	57	50
				Exposed	93	93	87	93	93	82	93	88	77	93	83	73	93	79	69	93	75	66	92	72	63	91	68	60	88	63	55	85	58	51	82	55	48	79	52	0	76	49	0	73	0	0
		11:12	42.5	Non-Exposed	95	95	95	95	95	95	95	95	95	95	95	93	95	95	88	95	95	84	94	91	80	93	87	76	86	79	70	79	73	64	73	68	60	67	63	56	63	60	53	59	56	50
				Exposed	95	95	87	95	93	82	95	88	77	95	83	73	95	79	69	95	75	66	94	71	63	93	68	60	89	63	55	86	58	51	83	55	48	80	52	0	77	49	0	74	0	0
		12:12	45	Non-Exposed	96	96	96	96	96	96	96	96	96	96	96	93	96	96	88	96	95	84	96	91	80	94	86	76	85	79	70	78	73	64	72	68	60	67	63	56	63	60	52	59	56	49
				Exposed	96	96	87	96	93	82	96	88	77	96	83	73	96	79	69	96	75	66	96	71	63	94	68	60	91	62	55	88	58	51	85	55	48	81	51	0	78	49	0	75	0	0
	D	Flat	0	Non-Exposed	91	91	90	91	91	84	91	91	79	91	91	75	91	86	71	91	82	67	91	78	64	90	74	61	82	68	57	75	63	53	69	59	49	64	55	46	61	52	0	57	49	0
				Exposed	91	85	70	91	80	65	91	75	62	91	71	59	91	67	56	91	64	54	91	61	52	91	59	50	91	55	0	91	51	0	91	47	0	91	0	0	91	0	0	91	0	0
		1:12	4.8	Non-Exposed	87	87	87	87	87	84	87	87	79	87	87	75	87	86	71	87	82	67	87	78	64	87	74	61	81	68	57	75	62	53	69	58	49	64	55	46	60	52	0	57	49	0
				Exposed	87	85	70	87	80	65	87	75	62	87	71	59	87	67	56	87	64	54	87	61	52	87	59	50	87	54	0	87	51	0	87	47	0	87	0	0	87	0	0	0	0	0
		2:12	9.5	Non-Exposed	84	84	84	84	84	79	84	83	74	84	78	69	84	74	66	84	70	62	83	66	60	79	63	57	73	58	53	67	54	50	63	51	46	59	48	0	56	0	0	53	0	0
				Exposed	84	73	65	84	68	61	84	64	58	84	61	55	84	58	53	84	56	51	84	53	48	84	51	47	84	47	0	82	0	0	80	0	0	78	0	0	0	0	0	0	0	0
		3:12	14.0	Non-Exposed	81	81	81	81	81	78	81	81	73	81	78	69	81	73	65	81	69	62	81	66	60	79	63	57	73	58	53	67	54	49	63	51	46	59	48	0	55	0	0	52	0	0
				Exposed	81	72	64	81	68	61	81	64	58	81	61	55	81	58	53	81	55	50	81	53	48	81	51	47	81	47	0	80	0	0	78	0	0	76	0	0	0	0	0	0	0	0
		4:12	18.4	Non-Exposed	85	85	83	85	85	78	85	82	73	85	77	69	85	73	65	85	69	62	82	66	59	79	63	57	72	58	53	67	54	49	62	51	46	59	48	0	55	0	0	52	0	0
				Exposed	85	72	64	85	67	61	85	63	58	85	60	55	85	58	53	85	55	50	85	53	48	85	51	46	85	47	0	83	0	0	81	0	0	0	0	0	0	0	0	0	0	0
		5:12	22.6	Non-Exposed	86	86	86	86	86	86	86	86	83	86	86	78	86	81	74	86	77	70	86	73	66	86	70	63	85	64	58	78	59	54	73	56	50	68	52	46	64	49	43	60	47	0
				Exposed	86	80	73	86	75	68	86	71	64	86	67	61	86	63	58	86	61	55	86	58	52	86	56	50	86	52	46	84	48	0	82	0	0	80	0	0	78	0	0	76	0	0
		6:12	26.6	Non-Exposed	87	87	87	87	87	87	87	87	83	87	86	78	87	81	74	87	77	70	87	73	66	87	70	63	84	64	58	78	59	53	73	55	50	68	52	46	64	49	0	60	47	0
				Exposed	87	80	73	87	75	68	87	71	64	87	67	60	87	63	57	87	60	55	87	58	52	87	56	50	87	52	46	85	48	0	83	0	0	81	0	0	79	0	0	77	0	0
		7:12	30.3	Non-Exposed	88	88	88	88	88	88	88	88	88	88	88	85	87	87	81	85	85	77	84	83	73	83	79	70	78	73	64	72	67	59	66	62	55	61	58	51	58	55	48	55	52	45
				Exposed	88	88	80	88	85	75	88	80	70	88	76	67	87	72	63	85	68	60	84	65	58	83	62	55	80	58	51	77	54	47	74	51	0	72	48	0	69	0	0	0	0	0
		8:12	33.7	Non-Exposed	90	90	90	90	90	90	90	90	90	90	90	85	88	88	80	87	87	76	85	83	73	84	79	69	78	72	63	71	67	59	66	62	55	61	58	51	58	55	48	55	52	45
				Exposed	90	90	79	90	85	75	90	80	70	90	76	66	88	72	63	87	68	60	85	65	57	84	62	55	81	58	51	78	54	47	75	50	0	73	47	0	70	0	0	0	0	0
		9:12	36.9	Non-Exposed	91	91	91	91	91	91	91	91	89	91	91	85	90	90	80	89	87	76	87	83	73	85	79	69	78	72	63	71	66	59	66	62	55	61	58	51	58	55	48	55	52	45
				Exposed	91	90	79	91	85	74	91	80	70	91	76	66	90	72	63	89	68	60	87	65	57	86	62	55	83	58	51	79	54	47	77	50	0	74	47	0	71	0	0	0	0	0
		10:12	39.8	Non-Exposed	93	93	93	93	93	93	93	93	89	93	93	84	92	91	80	90	87	76	89	82	72	85	79	69	77	72	63	71	66	59	65	62	55	61	58	51	58	55	48	55	52	45
				Exposed	93	90	79	93	84	74	93	80	70	93	75	66	92	71	63	90	68	60	89	65	57	87	62	55	84	58	51	81	54	47	78	50	0	75	47	0	72	0	0	0	0	0
		11:12	42.5	Non-Exposed	95	95	95	95	95	94	95	95	89	95	95	84	94	91	80	92	86	76	89	82	72	85	78	69	77	72	63	71	66	58	65	62	55	61	58	51	58	55	48	55	52	45
				Exposed	95	89	79	95	84	74	95	79	70	95	75	66	94	71	63	92	68	60	91	65	57	89	62	55	86	57	51	82	54	47	79	50	0	76	47	0	73	0	0	0	0	0
		12:12	45	Non-Exposed	96	96	96	96	96	94	96	96	89	96	95	84	96	90	80	93	86	76	89	82	72	84	78	69	77	72	63	71	66	58	65	62	54	61	58	51	58	55	48	55	52	45
				Exposed	96	89	78	96	84	74	96	79	70	96	75	66	96	71	63	94	68	60	92	64	57	91	62	55	87	57	50	84	54	47	80	50	0	77	47	0	73	0	0	0	0	0

Tamarack 2.3 Rail – Gable Flush-Mount on 30 Foot Maximum Mean Roof Height – Landscape – Panel Width = 45 Inches or Less

Ground Snow Load	Exposure Category	Roof Pitch	Roof Angle	Wind Speed (mph)	95			100			105			110			115			120			125			130			140			150			160			170			180			190		
				Roof Area	1	2	3	1	2	3	1	2	3	1	2	3	1	2	3	1	2	3	1	2	3	1	2	3	1	2	3	1	2	3	1	2	3	1	2	3	1	2	3	1	2	3
20	B	Flat	0	Non-Exposed	84	84	84	84	84	84	84	84	84	84	84	84	84	84	84	84	84	84	84	84	84	84	84	83	84	84	76	84	84	70	84	79	64	84	73	60	82	68	57	77	64	54
				Exposed	84	84	84	84	84	84	84	84	84	84	84	80	84	84	75	84	84	71	84	83	68	84	79	65	84	72	60	84	66	56	84	62	52	84	58	49	84	55	46	84	52	0
		1:12	4.8	Non-Exposed	80	80	80	80	80	80	80	80	80	80	80	80	80	80	80	80	80	80	80	80	80	80	80	80	80	80	76	80	80	69	80	78	64	80	73	60	80	68	57	76	64	54
				Exposed	80	80	80	80	80	80	80	80	80	80	80	79	80	80	75	80	80	71	80	80	68	80	79	65	80	72	60	80	66	55	80	62	52	80	58	49	80	55	0	80	52	0
		2:12	9.5	Non-Exposed	76	76	76	76	76	76	76	76	76	76	76	76	76	76	76	76	76	76	76	76	76	76	76	76	76	76	70	76	72	64	76	67	60	76	62	56	73	58	53	69	55	50
				Exposed	76	76	76	76	76	76	76	76	76	76	76	74	76	76	70	76	74	66	76	71	63	76	67	60	76	61	56	76	57	52	76	54	49	76	50	46	76	47	0	75	0	0
		3:12	14.0	Non-Exposed	74	74	74	74	74	74	74	74	74	74	74	74	74	74	74	74	74	74	74	74	74	74	74	74	74	74	70	74	72	64	74	66	60	74	62	56	73	58	53	68	55	50
				Exposed	74	74	74	74	74	74	74	74	74	74	74	74	74	74	70	74	74	66	74	70	63	74	67	60	74	61	56	74	57	52	74	53	49	74	50	46	74	47	0	73	0	0
		4:12	18.4	Non-Exposed	78	78	78	78	78	78	78	78	78	78	78	78	78	78	78	78	78	78	78	78	78	78	78	77	78	78	70	78	72	64	78	66	60	77	62	56	72	58	53	68	55	50
				Exposed	78	78	78	78	78	78	78	78	78	78	78	73	78	78	69	78	74	66	78	70	63	78	67	60	78	61	56	78	57	52	78	53	49	78	50	46	78	47	0	77	0	0
		5:12	22.6	Non-Exposed	79	79	79	79	79	79	79	79	79	79	79	79	79	79	79	79	79	79	79	79	79	79	79	79	79	79	79	79	79	73	79	74	67	79	69	62	79	64	58	78	60	55
				Exposed	79	79	79	79	79	79	79	79	79	79	79	79	79	79	79	79	79	75	79	78	71	79	74	67	79	68	61	79	62	57	79	58	53	79	55	49	79	52	46	78	49	0
		6:12	26.6	Non-Exposed	80	80	80	80	80	80	80	80	80	80	80	80	80	80	80	80	80	80	80	80	80	80	80	80	80	80	79	80	80	72	80	74	67	80	68	62	80	64	58	79	60	54
				Exposed	80	80	80	80	80	80	80	80	80	80	80	80	80	80	79	80	80	74	80	78	71	80	74	67	80	68	61	80	62	57	80	58	53	80	55	49	80	52	46	79	49	0
		7:12	30.3	Non-Exposed	82	82	82	82	82	82	82	82	82	82	82	82	82	82	82	82	82	82	82	82	82	82	82	82	82	82	82	80	80	80	78	78	73	76	76	68	75	73	64	73	68	60
				Exposed	82	82	82	82	82	82	82	82	82	82	82	82	82	82	82	82	82	82	82	82	78	82	82	74	82	77	68	80	71	62	78	66	58	76	61	54	75	58	51	73	55	48
		8:12	33.7	Non-Exposed	84	84	84	84	84	84	84	84	84	84	84	84	84	84	84	84	84	84	84	84	84	84	84	84	84	84	84	82	82	79	80	80	73	78	78	68	76	73	64	73	68	60
				Exposed	84	84	84	84	84	84	84	84	84	84	84	84	84	84	84	84	84	81	84	84	77	84	84	74	84	77	67	82	71	62	80	65	58	78	61	54	76	58	51	74	55	48
		9:12	36.9	Non-Exposed	86	86	86	86	86	86	86	86	86	86	86	86	86	86	86	86	86	86	86	86	86	86	86	86	86	86	86	84	84	79	82	82	73	80	77	68	78	72	63	73	68	60
				Exposed	86	86	86	86	86	86	86	86	86	86	86	86	86	86	85	86	86	81	86	86	77	86	84	73	86	77	67	84	71	62	82	65	58	80	61	54	78	58	51	76	55	48
		10:12	39.8	Non-Exposed	88	88	88	88	88	88	88	88	88	88	88	88	88	88	88	88	88	88	88	88	88	88	88	88	88	88	86	86	86	79	84	83	73	82	77	68	78	72	63	72	68	60
				Exposed	88	88	88	88	88	88	88	88	88	88	88	88	88	88	85	88	88	81	88	88	77	88	84	73	88	76	67	86	70	62	84	65	58	82	61	54	80	58	51	77	55	48
		11:12	42.5	Non-Exposed	90	90	90	90	90	90	90	90	90	90	90	90	90	90	90	90	90	90	90	90	90	90	90	90	90	90	85	88	88	79	86	83	73	83	77	68	77	72	63	72	68	60
				Exposed	90	90	90	90	90	90	90	90	90	90	90	89	90	90	85	90	90	80	90	87	77	90	83	73	90	76	67	88	70	62	86	65	58	84	61	54	81	58	51	79	55	48
		12:12	45	Non-Exposed	92	92	92	92	92	92	92	92	92	92	92	92	92	92	92	92	92	92	92	92	92	92	92	92	92	92	85	90	89	78	88	83	73	83	77	67	77	72	63	72	67	59
				Exposed	92	92	92	92	92	92	92	92	92	92	92	89	92	92	84	92	91	80	92	87	76	92	83	73	92	76	67	90	70	62	88	65	58	85	61	54	83	58	51	81	55	48
	C	Flat	0	Non-Exposed	84	84	84	84	84	84	84	84	84	84	84	83	84	84	79	84	84	75	84	84	71	84	82	67	84	75	62	83	69	58	77	64	54	71	60	51	67	57	48	63	53	0
				Exposed	84	84	78	84	84	73	84	84	68	84	79	65	84	75	61	84	71	59	84	67	56	84	64	54	84	59	50	84	55	47	84	52	0	84	49	0	84	0	0	84	0	0
		1:12	4.8	Non-Exposed	80	80	80	80	80	80	80	80	80	80	80	80	80	80	78	80	80	74	80	80	71	80	80	67	80	75	62	80	69	57	77	64	54	71	60	51	66	56	48	62	53	0
				Exposed	80	80	77	80	80	72	80	80	68	80	79	64	80	74	61	80	71	59	80	67	56	80	64	54	80	59	50	80	55	47	80	52	0	80	49	0	80	0	0	80	0	0
		2:12	9.5	Non-Exposed	76	76	76	76	76	76	76	76	76	76	76	76	76	76	73	76	76	69	76	74	66	76	70	63	76	64	58	74	59	54	69	55	51	64	52	47	61	49	0	57	47	0
				Exposed	76	76	72	76	76	67	76	71	63	76	67	60	76	63	58	76	61	55	76	58	53	76	56	51	76	52	47	76	48	0	75	0	0	74	0	0	73	0	0	0	0	0
		3:12	14.0	Non-Exposed	74	74	74	74	74	74	74	74	74	74	74	74	74	74	73	74	74	69	74	73	65	74	70	62	74	64	58	74	59	54	69	55	50	64	52	47	60	49	0	57	46	0
				Exposed	74	74	72	74	74	67	74	71	63	74	67	60	74	63	57	74	60	55	74	58	53	74	56	51	74	52	47	74	48	0	73	0	0	72	0	0	71	0	0	0	0	0
		4:12	18.4	Non-Exposed	78	78	78	78	78	78	78	78	78	78	78	77	78	78	72	78	77	69	78	73	65	78	70	62	78	63	58	74	59	54	68	55	50	64	52	47	60	49	0	57	46	0
				Exposed	78	78	71	78	75	67	78	71	63	78	66	60	78	63	57	78	60	55	78	58	53	78	56	51	78	52	47	78	48	0	77	0	0	76	0	0	74	0	0	0	0	0
		5:12	22.6	Non-Exposed	79	79	79	79	79	79	79	79	79	79	79	79	79	79	79	79	79	78	79	79	74	79	78	70	79	71	64	79	65	59	78	61	55	75	57	51	70	54	48	66	51	45
				Exposed	79	79	79	79	79	76	79	79	71	79	74	67	79	70	63	79	67	60	79	63	58	79	61	55	79	56	51	79	53	47	78	49	43	76	46	0	75	0	0	73	0	0
		6:12	26.6	Non-Exposed	80	80	80	80	80	80	80	80	80	80	80	80	80	80	80	80	80	78	80	80	74	80	77	70	80	71	64	80	65	59	79	60	55	75	57	51	70	54	48	66	51	45
				Exposed	80	80	80	80	80	76	80	78	71	80	74	67	80	70	63	80	66	60	80	63	57	80	61	55	80	56	50	80	53	47	79	49	0	78	46	0	76	0	0	74	0	0
		7:12	30.3	Non-Exposed	82	82	82	82	82	82	82	82	82	82	82	82	82	82	82	81	81	81	80	80	80	79	79	77	77	77	70	75	74	65	73	68	60	68	64	56	63	60	53	60	57	50
				Exposed	82	82	82	82	82	82	82	82	78	82	82	74	82	80	70	81	76	66	80	72	63	79	69	60	77	63	56	75	59	52	73	55	48	71	52	45	69	49	0	67	46	0
		8:12	33.7	Non-Exposed	84	84	84	84	84	84	84	84	84	84	84	84	84	84	84	83	83	83	82	82	81	81	81	77	79	79	70	77	74	65	73	68	60	68	63	56	63	60	53	60	57	50
				Exposed	84	84	84	84	84	83	84	84	78	84	84	74	84	80	70	83	76	66	82	72	63	81	69	60	79	63	56	77	59	52	74	55	48	72	52	45	70	49	0	68	0	0
		9:12	36.9	Non-Exposed	86	86	86	86	86	86	86	86	86	86	86	86	86	86	86	85	85	84	84	84	80	83	83	77	81	80	70	78	73	64	73	68	60	68	63	56	63	60	53	60	57	50
				Exposed	86	86	86	86	86	82	86	86	78	86	84	73	86	79	69	85	75	66	84	72	63	83	68	60	81	63	56	78	59	52	76	55	48	74	52	45	71	49	0	69	0	0
		10:12	39.8	Non-Exposed	88	88	88	88	88	88	88	88	88	88	88	88	88	88	88	88	88	84	86	86	80	85	85	76	83	80	70	79	73	64	73	68	60	67	63	56	63	60	53	60	57	50
				Exposed	88	88	87	88	88	82	88	88	77	88	83	73	88	79	69	88	75	66	86	72	63	85	68	60	83	63	55	80	58	51	78	55	48	75	52	0	73	49	0	70	0	0
		11:12	42.5	Non-Exposed	90	90	90	90	90	90	90	90	90	90	90	90	90	90	88	90	90	84	89	89	80	87	87	76	85	79	70	79	73	64	73	68	60	67	63	56	63	60	53	59	56	50
				Exposed	90	90	87	90	90	82	90	88	77	90	83	73	90	79	69	90	75	66	89	71	63	87	68	60	85	63	55	82	58	51	79	55	48	77	52	0	74	49	0	72	0	0
		12:12	45	Non-Exposed	92	92	92	92	92	92	92	92	92	92	92	92	92	92	88	92	92	84	91	91	80	89	86	76	85	79	70	78	73	64	72	68	60	67	63	56	63	60	52	59	56	49
				Exposed	92	92	87	92	92	82	92	88	77	92	83	73	92	79	69	92	75	66	91	71	63	89	68	60	87	62	55	84	58	51	81	55	48	78	51	0	75	49	0	73	0	0
	D	Flat	0	Non-Exposed	84	84	84	84	84	84	84	84	79	84	84	75	84	84	71	84	82	67	84	78	64	84	74	61	82	68	57	75	63	53	69	59	49	64	55	46	61	52	0	57	49	0
				Exposed	84	84	70	84	80	65	84	75	62	84	71	59	84	67	56	84	64	54	84	61	52	84	59	50	84	55	0	84	51	0	84	47	0	84	0	0	84	0	0	83	0	0
		1:12	4.8	Non-Exposed	80	80	80	80	80	80	80	80	79	80	80	75	80	80	71	80	80	67	80	78	64	80	74	61	80	68	57	75	62	53	69	58	49	64	55	46	60	52	0	57	49	0
				Exposed	80	80	70	80	80	65	80	75	62	80	71	59	80	67	56	80	64	54	80	61	52	80	59	50	80	54	0	80	51	0	80	47	0	80	0	0	80	0	0	0	0	0
		2:12	9.5	Non-Exposed	76	76	76	76	76	76	76	76	74	76	76	69	76	74	66	76	70	62	76	66	60	76	63	57	73	58	53	67	54	50	63	51	46	59	48	0	56	0	0	53	0	0
				Exposed	76	73	65	76	68	61	76	64	58	76	61	55	76	58	53	76	56	51	76	53	48	76	51	47	76	47	0	75	0	0	73	0	0	72	0	0	0	0	0	0	0	0
		3:12	14.0	Non-Exposed	74	74	74	74	74	74	74	74	73	74	74	69	74	73	65	74	69	62	74	66	60	74	63	57	73	58	53	67	54	49	63	51	46	59	48	0	55	0	0	52	0	0
				Exposed	74	72	64	74	68	61	74	64	58	74	61	55	74	58	53	74	55	50	74	53	48	74	51	47	74	47	0	73	0	0	71	0	0	70	0	0	0	0	0	0	0	0
		4:12	18.4	Non-Exposed	78	78	78	78	78	78	78	78	73	78	77	69	78	73	65	78	69	62	78	66	59	78	63	57	72	58	53	67	54	49	62	51	46	59	48	0	55	0	0	52	0	0
				Exposed	78	72	64	78	67	61	78	63	58	78	60	55	78	58	53	78	55	50	78	53	48	78	51	46	78	47	0	77	0	0	75	0	0	0	0	0	0	0	0	0	0	0
		5:12	22.6	Non-Exposed	79	79	79	79	79	79	79	79	79	79	79	78	79	79	74	79	77	70	79	73	66	79	70	63	79	64	58	77	59	54	73	56	50	68	52	46	64	49	43	60	47	0
				Exposed	79	79	73	79	75	68	79	71	64	79	67	61	79	63	58	79	61	55	79	58	52	79	56	50	79	52	46	77	48	0	76	0	0	74	0	0	73	0	0	71	0	0
		6:12	26.6	Non-Exposed	80	80	80	80	80	80	80	80	80	80	80	78	80	80	74	80	77	70	80	73	66	80	70	63	80	64	58	78	59	53	73	55	50	68	52	46	64	49	0	60	47	0
				Exposed	80	80	73	80	75	68	80	71	64	80	67	60	80	63	57	80	60	55	80	58	52	80	56	50	80	52	46	79	48	0	77	0	0	75	0	0	74	0	0	72	0	0
		7:12	30.3	Non-Exposed	82	82	82	82	82	82	82	82	82	81	81	81	80	80	80	79	79	77	78	78	73	77	77	70	75	73	64	72	67	59	66	62	55	61	58	51	58	55	48	55	52	45
				Exposed	82	82	80	82	82	75	82	80	70	81	76	67	80	72	63	79	68	60	78	65	58	77	62	55	75	58	51	72	54	47	70	51	0	68	48	0	66	0	0	0	0	0
		8:12	33.7	Non-Exposed	84	84	84	84	84	84	84	84	84	83	83	83	82	82	80	81	81	76	80	80	73	79	79	69	76	72	63	71	67	59	66	62	55	61	58	51	58	55	48	55	52	45
				Exposed	84	84	79	84	84	75	84	80	70	83	76	66	82	72	63	81	68	60	80	65	57	79	62	55	76	58	51	74	54	47	71	50	0	69	47	0	67	0	0	0	0	0
		9:12	36.9	Non-Exposed	86	86	86	86	86	86	86	86	86	86	86	85	84	84	80	83	83	76	82	82	73	80	79	69	78	72	63	71	66	59	66	62	55	61	58	51	58	55	48	55	52	45
				Exposed	86	86	79	86	85	74	86	80	70	86	76	66	84	72	63	83	68	60	82	65	57	80	62	55	78	58	51	75	54	47	73	50	0	70	47	0	68	0	0	0	0	0
		10:12	39.8	Non-Exposed	88	88	88	88	88	88	88	88	88	88	88	84	86	86	80	85	85	76	84	82	72	82	79	69	77	72	63	71	66	59	65	62	55	61	58	51	58	55	48	55	52	45
				Exposed	88	88	79	88	84	74	88	80	70	88	75	66	86	71	63	85	68	60	84	65	57	82	62	55	79	58	51	77	54	47	74	50	0	71	47	0	69	0	0	0	0	0
		11:12	42.5	Non-Exposed	90	90	90	90	90	90	90	90	89	90	90	84	89	89	80	87	86	76	86	82	72	84	78	69	77	72	63	71	66	58	65	62	55	61	58	51	58	55	48	55	52	45
				Exposed	90	89	79	90	84	74	90	79	70	90	75	66	89	71	63	87	68	60	86	65	57	84	62	55	81	57	51	78	54	47	76	50	0	73	47	0	70	0	0	0	0	0
		12:12	45	Non-Exposed	92	92	92	92	92	92	92	92	89	92	92	84	91	90	80	89	86	76	88	82	72	84	78	69	77	72	63	71	66	58	65	62	54	61	58	51	58	55	48	55	52	45
				Exposed	92	89	78	92	84	74	92	79	70	92	75	66	91	71	63	89	68	60	88	64	57	86	62	55	83	57	50	80	54	47	77	50	0	74	47	0	71	0	0	0	0	0

Tamarack 2.3 Rail – Gable Flush-Mount on 30 Foot Maximum Mean Roof Height – Landscape – Panel Width = 45 Inches or Less

Ground Snow Load	Exposure Category	Roof Pitch	Roof Angle	Wind Speed (mph)	95			100			105			110			115			120			125			130			140			150			160			170			180			190		
				Roof Area	1	2	3	1	2	3	1	2	3	1	2	3	1	2	3	1	2	3	1	2	3	1	2	3	1	2	3	1	2	3	1	2	3	1	2	3	1	2	3	1	2	3
25	B	Flat	0	Non-Exposed	82	82	82	82	82	82	82	82	82	82	82	82	82	82	82	82	82	82	82	82	82	82	82	82	82	82	76	82	82	70	82	79	64	82	73	60	82	68	57	77	64	54
				Exposed	82	82	82	82	82	82	82	82	82	82	82	80	82	82	75	82	82	71	82	82	68	82	79	65	82	72	60	82	66	56	82	62	52	82	58	49	82	55	46	82	52	0
		1:12	4.8	Non-Exposed	78	78	78	78	78	78	78	78	78	78	78	78	78	78	75	78	78	78	78	78	78	78	78	78	78	78	76	78	78	69	78	78	64	78	73	60	78	68	57	76	64	54
				Exposed	78	78	78	78	78	78	78	78	78	78	78	78	78	78	75	78	78	71	78	78	68	78	78	65	78	72	60	78	66	55	78	62	52	78	58	49	78	55	0	78	52	0
		2:12	9.5	Non-Exposed	75	75	75	75	75	75	75	75	75	75	75	75	75	75	75	75	75	75	75	75	75	75	75	75	75	75	70	75	72	64	75	67	60	75	62	56	73	58	53	69	55	50
				Exposed	75	75	75	75	75	75	75	75	75	75	75	74	75	75	70	75	74	66	75	71	63	75	67	60	75	61	56	75	57	52	75	54	49	75	50	46	75	47	0	74	0	0
		3:12	14.0	Non-Exposed	72	72	72	72	72	72	72	72	72	72	72	72	72	72	72	72	72	72	72	72	72	72	72	72	72	72	70	72	72	64	72	66	60	72	62	56	72	58	53	68	55	50
				Exposed	72	72	72	72	72	72	72	72	72	72	72	72	72	72	70	72	72	66	72	70	63	72	67	60	72	61	56	72	57	52	72	53	49	72	50	46	72	47	0	72	0	0
		4:12	18.4	Non-Exposed	72	72	72	72	72	72	72	72	72	72	72	72	72	72	72	72	72	72	72	72	72	72	72	72	72	72	70	72	72	64	72	66	60	72	62	56	72	58	53	68	55	50
				Exposed	72	72	72	72	72	72	72	72	72	72	72	72	72	72	69	72	72	66	72	70	63	72	67	60	72	61	56	72	57	52	72	53	49	72	50	46	72	47	0	72	0	0
		5:12	22.6	Non-Exposed	74	74	74	74	74	74	74	74	74	74	74	74	74	74	74	74	74	74	74	74	74	74	74	74	74	74	74	74	74	73	74	74	67	74	69	62	73	64	58	72	60	55
				Exposed	74	74	74	74	74	74	74	74	74	74	74	74	74	74	74	74	74	74	74	74	71	74	74	67	74	68	61	74	62	57	74	58	53	74	55	49	73	52	46	72	49	0
		6:12	26.6	Non-Exposed	75	75	75	75	75	75	75	75	75	75	75	75	75	75	75	75	75	75	75	75	75	75	75	75	75	75	75	75	75	72	75	74	67	75	68	62	75	64	58	74	60	54
				Exposed	75	75	75	75	75	75	75	75	75	75	75	75	75	75	75	75	75	74	75	75	71	75	74	67	75	68	61	75	62	57	75	58	53	75	55	49	75	52	46	74	49	0
		7:12	30.3	Non-Exposed	77	77	77	77	77	77	77	77	77	77	77	77	77	77	77	77	77	77	77	77	77	77	77	77	76	76	76	75	75	75	73	73	73	72	72	68	70	70	64	69	68	60
				Exposed	77	77	77	77	77	77	77	77	77	77	77	77	77	77	77	77	77	77	77	77	77	77	77	74	76	76	68	75	71	62	73	66	58	72	61	54	70	58	51	69	55	48
		8:12	33.7	Non-Exposed	79	79	79	79	79	79	79	79	79	79	79	79	79	79	79	79	79	79	79	79	79	79	79	79	78	78	78	77	77	77	75	75	73	74	74	68	72	72	64	70	68	60
				Exposed	79	79	79	79	79	79	79	79	79	79	79	79	79	79	79	79	79	79	79	79	77	79	79	74	78	77	67	77	71	62	75	65	58	74	61	54	72	58	51	70	55	48
		9:12	36.9	Non-Exposed	81	81	81	81	81	81	81	81	81	81	81	81	81	81	81	81	81	81	81	81	81	81	81	81	81	81	81	79	79	79	77	77	73	76	76	68	74	72	63	72	68	60
				Exposed	81	81	81	81	81	81	81	81	81	81	81	81	81	81	81	81	81	81	81	81	77	81	81	73	81	77	67	79	71	62	77	65	58	76	61	54	74	58	51	72	55	48
		10:12	39.8	Non-Exposed	83	83	83	83	83	83	83	83	83	83	83	83	83	83	83	83	83	83	83	83	83	83	83	83	83	83	83	81	81	79	79	79	73	78	77	68	76	72	63	72	68	60
				Exposed	83	83	83	83	83	83	83	83	83	83	83	83	83	83	83	83	83	81	83	83	77	83	83	73	83	76	67	81	70	62	79	65	58	78	61	54	76	58	51	74	55	48
		11:12	42.5	Non-Exposed	85	85	85	85	85	85	85	85	85	85	85	85	85	85	85	85	85	85	85	85	85	85	85	85	85	85	85	84	84	79	82	82	73	80	77	68	77	72	63	72	68	60
				Exposed	85	85	85	85	85	85	85	85	85	85	85	85	85	85	85	85	85	80	85	85	77	85	83	73	85	76	67	84	70	62	82	65	58	80	61	54	78	58	51	76	55	48
		12:12	45	Non-Exposed	88	88	88	88	88	88	88	88	88	88	88	88	88	88	88	88	88	88	88	88	88	88	88	88	88	88	85	86	86	78	84	83	73	82	77	67	77	72	63	72	67	59
				Exposed	88	88	88	88	88	88	88	88	88	88	88	88	88	88	84	88	88	80	88	87	76	88	83	73	88	76	67	86	70	62	84	65	58	82	61	54	80	58	51	77	55	48
	C	Flat	0	Non-Exposed	82	82	82	82	82	82	82	82	82	82	82	82	82	82	79	82	82	75	82	82	71	82	82	67	82	75	62	82	69	58	77	64	54	71	60	51	67	57	48	63	53	0
				Exposed	82	82	78	82	82	73	82	82	68	82	79	65	82	75	61	82	71	59	82	67	56	82	64	54	82	59	50	82	55	47	82	52	0	82	49	0	82	0	0	82	0	0
		1:12	4.8	Non-Exposed	78	78	78	78	78	78	78	78	78	78	78	78	78	78	78	78	78	74	78	78	71	78	78	67	78	75	62	78	69	57	77	64	54	71	60	51	66	56	48	62	53	0
				Exposed	78	78	77	78	78	72	78	78	68	78	78	64	78	74	61	78	71	59	78	67	56	78	64	54	78	59	50	78	55	47	78	52	0	78	49	0	78	0	0	78	0	0
		2:12	9.5	Non-Exposed	75	75	75	75	75	75	75	75	75	75	75	75	75	75	73	75	75	69	75	74	66	75	70	63	75	64	58	74	59	54	69	55	51	64	52	47	61	49	0	57	47	0
				Exposed	75	75	72	75	75	67	75	71	63	75	67	60	75	63	58	75	61	55	75	58	53	75	56	51	75	52	47	75	48	0	74	0	0	73	0	0	72	0	0	0	0	0
		3:12	14.0	Non-Exposed	72	72	72	72	72	72	72	72	72	72	72	72	72	72	72	72	72	69	72	72	65	72	70	62	72	64	58	72	59	54	69	55	50	64	52	47	60	49	0	57	46	0
				Exposed	72	72	72	72	72	67	72	71	63	72	67	60	72	63	57	72	60	55	72	58	53	72	56	51	72	52	47	72	48	0	72	0	0	71	0	0	69	0	0	0	0	0
		4:12	18.4	Non-Exposed	72	72	72	72	72	72	72	72	72	72	72	72	72	72	72	72	72	69	72	72	65	72	70	62	72	63	58	72	59	54	68	55	50	64	52	47	60	49	0	57	46	0
				Exposed	72	72	71	72	72	67	72	71	63	72	66	60	72	63	57	72	60	55	72	58	53	72	56	51	72	52	47	72	48	0	72	0	0	71	0	0	69	0	0	0	0	0
		5:12	22.6	Non-Exposed	74	74	74	74	74	74	74	74	74	74	74	74	74	74	74	74	74	74	74	74	74	74	74	70	74	71	64	74	65	59	73	61	55	71	57	51	70	54	48	66	51	45
				Exposed	74	74	74	74	74	74	74	74	71	74	74	67	74	70	63	74	67	60	74	63	58	74	61	55	74	56	51	74	53	47	73	49	43	71	46	0	70	0	0	69	0	0
		6:12	26.6	Non-Exposed	75	75	75	75	75	75	75	75	75	75	75	75	75	75	75	75	75	75	75	75	74	75	75	70	75	71	64	75	65	59	74	60	55	73	57	51	70	54	48	66	51	45
				Exposed	75	75	75	75	75	75	75	75	71	75	74	67	75	70	63	75	66	60	75	63	57	75	61	55	75	56	50	75	53	47	74	49	0	73	46	0	71	0	0	70	0	0
		7:12	30.3	Non-Exposed	77	77	77	77	77	77	77	77	77	77	77	77	77	77	77	76	76	76	75	75	75	74	74	74	73	73	70	71	71	65	69	68	60	67	64	56	63	60	53	60	57	50
				Exposed	77	77	77	77	77	77	77	77	77	77	77	74	77	77	70	76	76	66	75	72	63	74	69	60	73	63	56	71	59	52	69	55	48	67	52	45	65	49	0	64	46	0
		8:12	33.7	Non-Exposed	79	79	79	79	79	79	79	79	79	79	79	79	79	79	79	78	78	78	77	77	77	76	76	76	74	74	70	72	72	65	71	68	60	68	63	56	63	60	53	60	57	50
				Exposed	79	79	79	79	79	79	79	79	78	79	79	74	79	79	70	78	76	66	77	72	63	76	69	60	74	63	56	72	59	52	71	55	48	69	52	45	67	49	0	65	0	0
		9:12	36.9	Non-Exposed	81	81	81	81	81	81	81	81	81	81	81	81	81	81	81	80	80	80	79	79	79	78	78	77	76	76	70	74	73	64	72	68	60	68	63	56	63	60	53	60	57	50
				Exposed	81	81	81	81	81	81	81	81	78	81	81	73	81	79	69	80	75	66	79	72	63	78	68	60	76	63	56	74	59	52	72	55	48	70	52	45	68	49	0	66	0	0
		10:12	39.8	Non-Exposed	83	83	83	83	83	83	83	83	83	83	83	83	83	83	83	83	83	83	82	82	80	81	81	76	78	78	70	76	73	64	73	68	60	67	63	56	63	60	53	60	57	50
				Exposed	83	83	83	83	83	82	83	83	77	83	83	73	83	79	69	83	75	66	82	72	63	81	68	60	78	63	55	76	58	51	74	55	48	72	52	0	70	49	0	68	0	0
		11:12	42.5	Non-Exposed	85	85	85	85	85	85	85	85	85	85	85	85	85	85	85	85	85	84	84	84	80	83	83	76	80	79	70	78	73	64	73	68	60	67	63	56	63	60	53	59	56	50
				Exposed	85	85	85	85	85	82	85	85	77	85	83	73	85	79	69	85	75	66	84	71	63	83	68	60	80	63	55	78	58	51	76	55	48	73	52	0	71	49	0	69	0	0
		12:12	45	Non-Exposed	88	88	88	88	88	88	88	88	88	88	88	88	88	88	88	88	88	84	86	86	80	85	85	76	83	79	70	78	73	64	72	68	60	67	63	56	63	60	52	59	56	49
				Exposed	88	88	87	88	88	82	88	88	77	88	83	73	88	79	69	88	75	66	86	71	63	85	68	60	83	62	55	80	58	51	78	55	48	75	51	0	73	49	0	70	0	0
	D	Flat	0	Non-Exposed	82	82	82	82	82	82	82	82	79	82	82	75	82	82	71	82	82	67	82	78	64	82	74	61	82	68	57	75	63	53	69	59	49	64	55	46	61	52	0	57	49	0
				Exposed	82	82	70	82	80	65	82	75	62	82	71	59	82	67	56	82	64	54	82	61	52	82	59	50	82	55	0	82	51	0	82	47	0	82	0	0	82	0	0	82	0	0
		1:12	4.8	Non-Exposed	78	78	78	78	78	78	78	78	78	78	78	75	78	78	71	78	78	67	78	78	64	78	74	61	78	68	57	75	62	53	69	58	49	64	55	46	60	52	0	57	49	0
				Exposed	78	78	70	78	78	65	78	75	62	78	71	59	78	67	56	78	64	54	78	61	52	78	59	50	78	54	0	78	51	0	78	47	0	78	0	0	78	0	0	0	0	0
		2:12	9.5	Non-Exposed	75	75	75	75	75	75	75	75	74	75	75	69	75	74	66	75	70	62	75	66	60	75	63	57	73	58	53	67	54	50	63	51	46	59	48	0	56	0	0	53	0	0
				Exposed	75	73	65	75	68	61	75	64	58	75	61	55	75	58	53	75	56	51	75	53	48	75	51	47	75	47	0	74	0	0	72	0	0	71	0	0	0	0	0	0	0	0
		3:12	14.0	Non-Exposed	72	72	72	72	72	72	72	72	72	72	72	69	72	72	65	72	69	62	72	66	60	72	63	57	72	58	53	67	54	49	63	51	46	59	48	0	55	0	0	52	0	0
				Exposed	72	72	64	72	68	61	72	64	58	72	61	55	72	58	53	72	55	50	72	53	48	72	51	47	72	47	0	71	0	0	70	0	0	69	0	0	0	0	0	0	0	0
		4:12	18.4	Non-Exposed	72	72	72	72	72	72	72	72	72	72	72	69	72	72	65	72	69	62	72	66	59	72	63	57	72	58	53	67	54	49	62	51	46	59	48	0	55	0	0	52	0	0
				Exposed	72	72	64	72	67	61	72	63	58	72	60	55	72	58	53	72	55	50	72	53	48	72	51	46	72	47	0	71	0	0	70	0	0	0	0	0	0	0	0	0	0	0
		5:12	22.6	Non-Exposed	74	74	74	74	74	74	74	74	74	74	74	74	74	74	74	74	74	70	74	73	66	74	70	63	73	64	58	72	59	54	71	56	50	68	52	46	64	49	43	60	47	0
				Exposed	74	74	73	74	74	68	74	71	64	74	67	61	74	63	58	74	61	55	74	58	52	74	56	50	73	52	46	72	48	0	71	0	0	69	0	0	68	0	0	67	0	0
		6:12	26.6	Non-Exposed	75	75	75	75	75	75	75	75	75	75	75	75	75	75	75	75	75	70	75	73	66	75	70	63	75	64	58	73	59	53	72	55	50	68	52	46	64	49	0	60	47	0
				Exposed	75	75	73	75	75	68	75	71	64	75	67	60	75	63	57	75	60	55	75	58	52	75	56	50	75	52	46	73	48	0	72	0	0	71	0	0	69	0	0	68	0	0
		7:12	30.3	Non-Exposed	77	77	77	77	77	77	77	77	77	76	76	76	75	75	75	74	74	74	73	73	73	72	72	70	70	70	64	68	67	59	66	62	55	61	58	51	58	55	48	55	52	45
				Exposed	77	77	77	77	77	75	77	77	70	76	76	67	75	72	63	74	68	60	73	65	58	72	62	55	70	58	51	68	54	47	66	51	0	65	48	0	63	0	0	0	0	0
		8:12	33.7	Non-Exposed	79	79	79	79	79	79	79	79	79	78	78	78	77	77	77	76	76	76	75	75	73	74	74	69	72	72	63	70	67	59	66	62	55	61	58	51	58	55	48	55	52	45
				Exposed	79	79	79	79	79	75	79	79	70	78	76	66	77	72	63	76	68	60	75	65	57	74	62	55	72	58	51	70	54	47	68	50	0	66	47	0	64	0	0	0	0	0
		9:12	36.9	Non-Exposed	81	81	81	81	81	81	81	81	81	80	80	80	79	79	79	78	78	76	77	77	73	76	76	69	74	72	63	71	66	59	66	62	55	61	58	51	58	55	48	55	52	45
				Exposed	81	81	79	81	81	74	81	80	70	80	76	66	79	72	63	78	68	60	77	65	57	76	62	55	74	58	51	72	54	47	69	50	0	67	47	0	65	0	0	0	0	0
		10:12	39.8	Non-Exposed	83	83	83	83	83	83	83	83	83	83	83	83	82	82	80	80	80	76	79	79	72	78	78	69	76	72	63	71	66	59	65	62	55	61	58	51	58	55	48	55	52	45
				Exposed	83	83	79	83	83	74	83	80	70	83	75	66	82	71	63	80	68	60	79	65	57	78	62	55	76	58	51	73	54	47	71	50	0	69	47	0	66	0	0	0	0	0
		11:12	42.5	Non-Exposed	85	85	85	85	85	85	85	85	85	85	85	84	84	84	80	83	83	76	81	81	72	80	78	69	77	72	63	71	66	58	65	62	55	61	58	51	58	55	48	55	52	45
				Exposed	85	85	79	85	84	74	85	79	70	85	75	66	84	71	63	83	68	60	81	65	57	80	62	55	78	57	51	75	54	47	73	50	0	70	47	0	68	0	0	0	0	0
		12:12	45	Non-Exposed	88	88	88	88	88	88	88	88	88	88	88	84	86	86	80	85	85	76	84	82	72	82	78	69	77	72	63	71	66	58	65	62	54	61	58	51	58	55	48	55	52	45
				Exposed	88	88	78	88	84	74	88	79	70	88	75	66	86	71	63	85	68	60	84	64	57	82	62	55	80	57	50	77	54	47	74	50	0	71	47	0	69	0	0	0	0	0

Tamarack 2.3 Rail – Gable Flush-Mount on 30 Foot Maximum Mean Roof Height – Landscape – Panel Width = 45 Inches or Less

Ground Snow Load	Exposure Category	Roof Pitch	Roof Angle	Wind Speed (mph)	95			100			105			110			115			120			125			130			140			150			160			170			180			190		
				Roof Area	1	2	3	1	2	3	1	2	3	1	2	3	1	2	3	1	2	3	1	2	3	1	2	3	1	2	3	1	2	3	1	2	3	1	2	3	1	2	3	1	2	3
30	B	Flat	0	Non-Exposed	78	78	78	78	78	78	78	78	78	78	78	78	78	78	78	78	78	78	78	78	78	78	78	78	78	78	76	78	78	70	78	78	64	78	73	60	78	68	57	77	64	54
				Exposed	78	78	78	78	78	78	78	78	78	78	78	78	78	78	75	78	78	71	78	78	68	78	78	65	78	72	60	78	66	56	78	62	52	78	58	49	78	55	46	78	52	0
		1:12	4.8	Non-Exposed	73	73	73	73	73	73	73	73	73	73	73	73	73	73	73	73	73	73	73	73	73	73	73	73	73	73	73	73	73	69	73	73	64	73	73	60	73	68	57	73	64	54
				Exposed	73	73	73	73	73	73	73	73	73	73	73	73	73	73	73	73	73	71	73	73	68	73	73	65	73	72	60	73	66	55	73	62	52	73	58	49	73	55	0	73	52	0
		2:12	9.5	Non-Exposed	69	69	69	69	69	69	69	69	69	69	69	69	69	69	69	69	69	69	69	69	69	69	69	69	69	69	69	69	69	64	69	67	60	69	62	56	69	58	53	69	55	50
				Exposed	69	69	69	69	69	69	69	69	69	69	69	69	69	69	69	69	69	66	69	69	63	69	67	60	69	61	56	69	57	52	69	54	49	69	50	46	69	47	0	69	0	0
		3:12	14.0	Non-Exposed	67	67	67	67	67	67	67	67	67	67	67	67	67	67	67	67	67	67	67	67	67	67	67	67	67	67	67	67	67	64	67	66	60	67	62	56	67	58	53	67	55	50
				Exposed	67	67	67	67	67	67	67	67	67	67	67	67	67	67	67	67	67	66	67	67	63	67	67	60	67	61	56	67	57	52	67	53	49	67	50	46	67	47	0	67	0	0
		4:12	18.4	Non-Exposed	67	67	67	67	67	67	67	67	67	67	67	67	67	67	67	67	67	67	67	67	67	67	67	67	67	67	67	67	67	64	67	66	60	67	62	56	67	58	53	67	55	50
				Exposed	67	67	67	67	67	67	67	67	67	67	67	67	67	67	67	67	67	66	67	67	63	67	67	60	67	61	56	67	57	52	67	53	49	67	50	46	67	47	0	67	0	0
		5:12	22.6	Non-Exposed	68	68	68	68	68	68	68	68	68	68	68	68	68	68	68	68	68	68	68	68	68	68	68	68	68	68	68	68	68	68	68	68	67	68	68	62	68	64	58	68	60	55
				Exposed	68	68	68	68	68	68	68	68	68	68	68	68	68	68	68	68	68	68	68	68	68	68	68	67	68	68	61	68	62	57	68	58	53	68	55	49	68	52	46	68	49	0
		6:12	26.6	Non-Exposed	70	70	70	70	70	70	70	70	70	70	70	70	70	70	70	70	70	70	70	70	70	70	70	70	70	70	70	70	70	70	70	70	67	70	68	62	70	64	58	69	60	54
				Exposed	70	70	70	70	70	70	70	70	70	70	70	70	70	70	70	70	70	70	70	70	70	70	70	67	70	68	61	70	62	57	70	58	53	70	55	49	70	52	46	69	49	0
		7:12	30.3	Non-Exposed	72	72	72	72	72	72	72	72	72	72	72	72	72	72	72	72	72	72	72	72	72	72	72	72	72	72	72	71	71	71	70	70	70	68	68	68	67	67	64	66	66	60
				Exposed	72	72	72	72	72	72	72	72	72	72	72	72	72	72	72	72	72	72	72	72	72	72	72	72	72	72	68	71	71	62	70	66	58	68	61	54	67	58	51	66	55	48
		8:12	33.7	Non-Exposed	74	74	74	74	74	74	74	74	74	74	74	74	74	74	74	74	74	74	74	74	74	74	74	74	74	74	74	73	73	73	71	71	71	70	70	68	69	69	64	67	67	60
				Exposed	74	74	74	74	74	74	74	74	74	74	74	74	74	74	74	74	74	74	74	74	74	74	74	74	74	74	67	73	71	62	71	65	58	70	61	54	69	58	51	67	55	48
		9:12	36.9	Non-Exposed	77	77	77	77	77	77	77	77	77	77	77	77	77	77	77	77	77	77	77	77	77	77	77	77	76	76	76	75	75	75	73	73	73	72	72	68	70	70	63	69	68	60
				Exposed	77	77	77	77	77	77	77	77	77	77	77	77	77	77	77	77	77	77	77	77	77	77	77	73	76	76	67	75	71	62	73	65	58	72	61	54	70	58	51	69	55	48
		10:12	39.8	Non-Exposed	79	79	79	79	79	79	79	79	79	79	79	79	79	79	79	79	79	79	79	79	79	79	79	79	79	79	79	77	77	77	76	76	73	74	74	68	72	72	63	71	68	60
				Exposed	79	79	79	79	79	79	79	79	79	79	79	79	79	79	79	79	79	79	79	79	77	79	79	73	79	76	67	77	70	62	76	65	58	74	61	54	72	58	51	71	55	48
		11:12	42.5	Non-Exposed	81	81	81	81	81	81	81	81	81	81	81	81	81	81	81	81	81	81	81	81	81	81	81	81	81	81	81	80	80	79	78	78	73	76	76	68	74	72	63	72	68	60
				Exposed	81	81	81	81	81	81	81	81	81	81	81	81	81	81	81	81	81	80	81	81	77	81	81	73	81	76	67	80	70	62	78	65	58	76	61	54	74	58	51	73	55	48
		12:12	45	Non-Exposed	84	84	84	84	84	84	84	84	84	84	84	84	84	84	84	84	84	84	84	84	84	84	84	84	84	84	84	82	82	78	80	80	73	78	77	67	77	72	63	72	67	59
				Exposed	84	84	84	84	84	84	84	84	84	84	84	84	84	84	84	84	84	80	84	84	76	84	83	73	84	76	67	82	70	62	80	65	58	78	61	54	77	58	51	75	55	48
	C	Flat	0	Non-Exposed	78	78	78	78	78	78	78	78	78	78	78	78	78	78	78	78	78	75	78	78	71	78	78	67	78	75	62	78	69	58	77	64	54	71	60	51	67	57	48	63	53	0
				Exposed	78	78	78	78	78	73	78	78	68	78	78	65	78	75	61	78	71	59	78	67	56	78	64	54	78	59	50	78	55	47	78	52	0	78	49	0	78	0	0	78	0	0
		1:12	4.8	Non-Exposed	73	73	73	73	73	73	73	73	73	73	73	73	73	73	73	73	73	73	73	73	71	73	73	67	73	73	62	73	69	57	73	64	54	71	60	51	66	56	48	62	53	0
				Exposed	73	73	73	73	73	72	73	73	68	73	73	64	73	73	61	73	71	59	73	67	56	73	64	54	73	59	50	73	55	47	73	52	0	73	49	0	73	0	0	73	0	0
		2:12	9.5	Non-Exposed	69	69	69	69	69	69	69	69	69	69	69	69	69	69	69	69	69	69	69	69	66	69	69	63	69	64	58	69	59	54	69	55	51	64	52	47	61	49	0	57	47	0
				Exposed	69	69	69	69	69	67	69	69	63	69	67	60	69	63	58	69	61	55	69	58	53	69	56	51	69	52	47	69	48	0	69	0	0	68	0	0	67	0	0	0	0	0
		3:12	14.0	Non-Exposed	67	67	67	67	67	67	67	67	67	67	67	67	67	67	67	67	67	67	67	67	65	67	67	62	67	64	58	67	59	54	67	55	50	64	52	47	60	49	0	57	46	0
				Exposed	67	67	67	67	67	67	67	67	63	67	67	60	67	63	57	67	60	55	67	58	53	67	56	51	67	52	47	67	48	0	67	0	0	66	0	0	65	0	0	0	0	0
		4:12	18.4	Non-Exposed	67	67	67	67	67	67	67	67	67	67	67	67	67	67	67	67	67	67	67	67	65	67	67	62	67	63	58	67	59	54	67	55	50	64	52	47	60	49	0	57	46	0
				Exposed	67	67	67	67	67	67	67	67	63	67	66	60	67	63	57	67	60	55	67	58	53	67	56	51	67	52	47	67	48	0	67	0	0	66	0	0	65	0	0	0	0	0
		5:12	22.6	Non-Exposed	68	68	68	68	68	68	68	68	68	68	68	68	68	68	68	68	68	68	68	68	68	68	68	68	68	68	64	68	65	59	68	61	55	67	57	51	66	54	48	65	51	45
				Exposed	68	68	68	68	68	68	68	68	68	68	68	67	68	68	63	68	67	60	68	63	58	68	61	55	68	56	51	68	53	47	68	49	43	67	46	0	66	0	0	65	0	0
		6:12	26.6	Non-Exposed	70	70	70	70	70	70	70	70	70	70	70	70	70	70	70	70	70	70	70	70	70	70	70	70	70	70	64	70	65	59	70	60	55	68	57	51	67	54	48	66	51	45
				Exposed	70	70	70	70	70	70	70	70	70	70	70	67	70	70	63	70	66	60	70	63	57	70	61	55	70	56	50	70	53	47	70	49	0	68	46	0	67	0	0	66	0	0
		7:12	30.3	Non-Exposed	72	72	72	72	72	72	72	72	72	72	72	72	72	72	72	72	72	72	71	71	71	70	70	70	69	69	69	67	67	65	66	66	60	64	64	56	63	60	53	60	57	50
				Exposed	72	72	72	72	72	72	72	72	72	72	72	72	72	72	70	72	72	66	71	71	63	70	69	60	69	63	56	67	59	52	66	55	48	64	52	45	63	49	0	61	46	0
		8:12	33.7	Non-Exposed	74	74	74	74	74	74	74	74	74	74	74	74	74	74	74	74	74	74	73	73	73	72	72	72	71	71	70	69	69	65	67	67	60	66	63	56	63	60	53	60	57	50
				Exposed	74	74	74	74	74	74	74	74	74	74	74	74	74	74	70	74	74	66	73	72	63	72	69	60	71	63	56	69	59	52	67	55	48	66	52	45	64	49	0	62	0	0
		9:12	36.9	Non-Exposed	77	77	77	77	77	77	77	77	77	77	77	77	77	77	77	76	76	76	75	75	75	74	74	74	73	73	70	71	71	64	69	68	60	67	63	56	63	60	53	60	57	50
				Exposed	77	77	77	77	77	77	77	77	77	77	77	73	77	77	69	76	75	66	75	72	63	74	68	60	73	63	56	71	59	52	69	55	48	67	52	45	65	49	0	64	0	0
		10:12	39.8	Non-Exposed	79	79	79	79	79	79	79	79	79	79	79	79	79	79	79	79	79	79	78	78	78	77	77	76	75	75	70	73	73	64	71	68	60	67	63	56	63	60	53	60	57	50
				Exposed	79	79	79	79	79	79	79	79	77	79	79	73	79	79	69	79	75	66	78	72	63	77	68	60	75	63	55	73	58	51	71	55	48	69	52	0	67	49	0	65	0	0
		11:12	42.5	Non-Exposed	81	81	81	81	81	81	81	81	81	81	81	81	81	81	81	81	81	81	80	80	80	79	79	76	77	77	70	75	73	64	73	68	60	67	63	56	63	60	53	59	56	50
				Exposed	81	81	81	81	81	81	81	81	77	81	81	73	81	79	69	81	75	66	80	71	63	79	68	60	77	63	55	75	58	51	73	55	48	71	52	0	69	49	0	67	0	0
		12:12	45	Non-Exposed	84	84	84	84	84	84	84	84	84	84	84	84	84	84	84	84	84	84	83	83	80	81	81	76	79	79	70	77	73	64	72	68	60	67	63	56	63	60	52	59	56	49
				Exposed	84	84	84	84	84	82	84	84	77	84	83	73	84	79	69	84	75	66	83	71	63	81	68	60	79	62	55	77	58	51	75	55	48	72	51	0	70	49	0	68	0	0
	D	Flat	0	Non-Exposed	78	78	78	78	78	78	78	78	78	78	78	75	78	78	71	78	78	67	78	78	64	78	74	61	78	68	57	75	63	53	69	59	49	64	55	46	61	52	0	57	49	0
				Exposed	78	78	70	78	78	65	78	75	62	78	71	59	78	67	56	78	64	54	78	61	52	78	59	50	78	55	0	78	51	0	78	47	0	78	0	0	78	0	0	77	0	0
		1:12	4.8	Non-Exposed	73	73	73	73	73	73	73	73	73	73	73	73	73	73	71	73	73	67	73	73	64	73	73	61	73	68	57	73	62	53	69	58	49	64	55	46	60	52	0	57	49	0
				Exposed	73	73	70	73	73	65	73	73	62	73	71	59	73	67	56	73	64	54	73	61	52	73	59	50	73	54	0	73	51	0	73	47	0	73	0	0	73	0	0	0	0	0
		2:12	9.5	Non-Exposed	69	69	69	69	69	69	69	69	69	69	69	69	69	69	66	69	69	62	69	66	60	69	63	57	69	58	53	67	54	50	63	51	46	59	48	0	56	0	0	53	0	0
				Exposed	69	69	65	69	68	61	69	64	58	69	61	55	69	58	53	69	56	51	69	53	48	69	51	47	69	47	0	69	0	0	68	0	0	67	0	0	0	0	0	0	0	0
		3:12	14.0	Non-Exposed	67	67	67	67	67	67	67	67	67	67	67	67	67	67	65	67	67	62	67	66	60	67	63	57	67	58	53	67	54	49	63	51	46	59	48	0	55	0	0	52	0	0
				Exposed	67	67	64	67	67	61	67	64	58	67	61	55	67	58	53	67	55	50	67	53	48	67	51	47	67	47	0	67	0	0	66	0	0	65	0	0	0	0	0	0	0	0
		4:12	18.4	Non-Exposed	67	67	67	67	67	67	67	67	67	67	67	67	67	67	65	67	67	62	67	66	59	67	63	57	67	58	53	67	54	49	62	51	46	59	48	0	55	0	0	52	0	0
				Exposed	67	67	64	67	67	61	67	63	58	67	60	55	67	58	53	67	55	50	67	53	48	67	51	46	67	47	0	67	0	0	66	0	0	0	0	0	0	0	0	0	0	0
		5:12	22.6	Non-Exposed	68	68	68	68	68	68	68	68	68	68	68	68	68	68	68	68	68	66	68	68	63	68	64	58	68	59	54	67	56	50	66	52	46	64	49	43	60	47	0	60	47	0
				Exposed	68	68	68	68	68	68	68	68	64	68	67	61	68	63	58	68	61	55	68	58	52	68	56	50	68	52	46	68	48	0	67	0	0	66	0	0	64	0	0	63	0	0
		6:12	26.6	Non-Exposed	70	70	70	70	70	70	70	70	70	70	70	70	70	70	70	70	70	66	70	70	63	70	64	58	69	59	53	68	55	50	67	52	46	64	49	0	60	47	0	60	47	0
				Exposed	70	70	70	70	70	68	70	70	64	70	67	60	70	63	57	70	60	55	70	58	52	70	56	50	70	52	46	69	48	0	68	0	0	67	0	0	66	0	0	64	0	0
		7:12	30.3	Non-Exposed	72	72	72	72	72	72	72	72	72	72	72	72	71	71	71	70	70	70	69	69	69	69	69	69	67	67	64	65	65	59	63	62	55	61	58	51	58	55	48	55	52	45
				Exposed	72	72	72	72	72	72	72	72	70	72	72	67	71	71	63	70	68	60	69	65	58	69	62	55	67	58	51	65	54	47	63	51	0	62	48	0	60	0	0	0	0	0
		8:12	33.7	Non-Exposed	74	74	74	74	74	74	74	74	74	74	74	74	73	73	73	72	72	72	71	71	71	70	70	69	69	69	63	67	67	59	65	62	55	61	58	51	58	55	48	55	52	45
				Exposed	74	74	74	74	74	74	74	74	70	74	74	66	73	72	63	72	68	60	71	65	57	70	62	55	69	58	51	67	54	47	65	50	0	63	47	0	61	0	0	0	0	0
		9:12	36.9	Non-Exposed	77	77	77	77	77	77	77	77	77	76	76	76	75	75	75	74	74	74	73	73	73	72	72	69	70	70	63	68	66	59	66	62	55	61	58	51	58	55	48	55	52	45
				Exposed	77	77	77	77	77	74	77	77	70	76	76	66	75	72	63	74	68	60	73	65	57	72	62	55	70	58	51	68	54	47	66	50	0	65	47	0	63	0	0	0	0	0
		10:12	39.8	Non-Exposed	79	79	79	79	79	79	79	79	79	79	79	79	78	78	78	77	77	76	76	76	72	74	74	69	72	72	63	70	66	59	65	62	55	61	58	51	58	55	48	55	52	45
				Exposed	79	79	79	79	79	74	79	79	70	79	75	66	78	71	63	77	68	60	76	65	57	74	62	55	72	58	51	70	54	47	68	50	0	66	47	0	64	0	0	0	0	0
		11:12	42.5	Non-Exposed	81	81	81	81	81	81	81	81	81	81	81	81	80	80	80	79	79	76	78	78	72	77	77	69	74	72	63	71	66	58	65	62	55	61	58	51	58	55	48	55	52	45
				Exposed	81	81	79	81	81	74	81	79	70	81	75	66	80	71	63	79	68	60	78	65	57	77	62	55	74	57	51	72	54	47	70	50	0	68	47	0	65	0	0	0	0	0
		12:12	45	Non-Exposed	84	84	84	84	84	84	84	84	84	84	84	84	83	83	80	81	81	76	80	80	72	79	78	69	76	72	63	71	66	58	65	62	54	61	58	51	58	55	48	55	52	45
				Exposed	84	84	78	84	84	74	84	79	70	84	75	66	83	71	63	81	68	60	80	64	57	79	62	55	76	57	50	74	54	47	72	50	0	69	47	0	67	0	0	0	0	0

Tamarack 2.3 Rail – Gable Flush-Mount on 30 Foot Maximum Mean Roof Height – Landscape – Panel Width = 45 Inches or Less

Ground Snow Load	Exposure Category	Roof Pitch	Roof Angle	Wind Speed (mph)	95			100			105			110			115			120			125			130			140			150			160			170			180			190		
				Roof Area	1	2	3	1	2	3	1	2	3	1	2	3	1	2	3	1	2	3	1	2	3	1	2	3	1	2	3	1	2	3	1	2	3	1	2	3	1	2	3	1	2	3
35	B	Flat	0	Non-Exposed	73	73	73	73	73	73	73	73	73	73	73	73	73	73	73	73	73	73	73	73	73	73	73	73	73	73	73	73	73	70	73	73	64	73	73	60	73	68	57	73	64	54
				Exposed	73	73	73	73	73	73	73	73	73	73	73	73	73	73	73	73	73	71	73	73	68	73	73	65	73	72	60	73	66	56	73	62	52	73	58	49	73	55	46	73	52	0
		1:12	4.8	Non-Exposed	68	68	68	68	68	68	68	68	68	68	68	68	68	68	68	68	68	68	68	68	68	68	68	68	68	68	68	68	68	68	68	68	64	68	68	60	68	68	57	68	64	54
				Exposed	68	68	68	68	68	68	68	68	68	68	68	68	68	68	68	68	68	68	68	68	68	68	68	65	68	68	60	68	66	55	68	62	52	68	58	49	68	55	0	68	52	0
		2:12	9.5	Non-Exposed	65	65	65	65	65	65	65	65	65	65	65	65	65	65	65	65	65	65	65	65	65	65	65	65	65	65	65	65	65	64	65	65	60	65	62	56	65	58	53	65	55	50
				Exposed	65	65	65	65	65	65	65	65	65	65	65	65	65	65	65	65	65	65	65	65	63	65	65	60	65	61	56	65	57	52	65	54	49	65	50	46	65	47	0	65	0	0
		3:12	14.0	Non-Exposed	62	62	62	62	62	62	62	62	62	62	62	62	62	62	62	62	62	62	62	62	62	62	62	62	62	62	62	62	62	62	62	62	60	62	62	56	62	58	53	62	55	50
				Exposed	62	62	62	62	62	62	62	62	62	62	62	62	62	62	62	62	62	62	62	62	62	62	62	60	62	61	56	62	57	52	62	53	49	62	50	46	62	47	0	62	0	0
		4:12	18.4	Non-Exposed	62	62	62	62	62	62	62	62	62	62	62	62	62	62	62	62	62	62	62	62	62	62	62	62	62	62	62	62	62	62	62	62	60	62	62	56	62	58	53	62	55	50
				Exposed	62	62	62	62	62	62	62	62	62	62	62	62	62	62	62	62	62	62	62	62	62	62	62	60	62	61	56	62	57	52	62	53	49	62	50	46	62	47	0	62	0	0
		5:12	22.6	Non-Exposed	63	63	63	63	63	63	63	63	63	63	63	63	63	63	63	63	63	63	63	63	63	63	63	63	63	63	63	63	63	63	63	63	63	63	63	62	63	63	58	63	60	55
				Exposed	63	63	63	63	63	63	63	63	63	63	63	63	63	63	63	63	63	63	63	63	63	63	63	63	63	63	61	63	62	57	63	58	53	63	55	49	63	52	46	63	49	0
		6:12	26.6	Non-Exposed	65	65	65	65	65	65	65	65	65	65	65	65	65	65	65	65	65	65	65	65	65	65	65	65	65	65	65	65	65	65	65	65	65	65	65	62	65	64	58	65	60	54
				Exposed	65	65	65	65	65	65	65	65	65	65	65	65	65	65	65	65	65	65	65	65	65	65	65	65	65	65	61	65	62	57	65	58	53	65	55	49	65	52	46	65	49	0
		7:12	30.3	Non-Exposed	67	67	67	67	67	67	67	67	67	67	67	67	67	67	67	67	67	67	67	67	67	67	67	67	67	67	67	67	67	67	66	66	66	65	65	65	64	64	64	63	63	60
				Exposed	67	67	67	67	67	67	67	67	67	67	67	67	67	67	67	67	67	67	67	67	67	67	67	67	67	67	67	67	67	62	66	66	58	65	61	54	64	58	51	63	55	48
		8:12	33.7	Non-Exposed	70	70	70	70	70	70	70	70	70	70	70	70	70	70	70	70	70	70	70	70	70	70	70	70	70	70	70	69	69	69	68	68	68	67	67	67	66	66	64	64	64	60
				Exposed	70	70	70	70	70	70	70	70	70	70	70	70	70	70	70	70	70	70	70	70	70	70	70	70	70	70	67	69	69	62	68	65	58	67	61	54	66	58	51	64	55	48
		9:12	36.9	Non-Exposed	73	73	73	73	73	73	73	73	73	73	73	73	73	73	73	73	73	73	73	73	73	73	73	73	73	73	73	71	71	71	70	70	70	69	69	68	67	67	63	66	66	60
				Exposed	73	73	73	73	73	73	73	73	73	73	73	73	73	73	73	73	73	73	73	73	73	73	73	73	73	73	67	71	71	62	70	65	58	69	61	54	67	58	51	66	55	48
		10:12	39.8	Non-Exposed	75	75	75	75	75	75	75	75	75	75	75	75	75	75	75	75	75	75	75	75	75	75	75	75	75	75	75	74	74	74	72	72	72	71	71	68	69	69	63	68	68	60
				Exposed	75	75	75	75	75	75	75	75	75	75	75	75	75	75	75	75	75	75	75	75	75	75	75	73	75	75	67	74	70	62	72	65	58	71	61	54	69	58	51	68	55	48
		11:12	42.5	Non-Exposed	78	78	78	78	78	78	78	78	78	78	78	78	78	78	78	78	78	78	78	78	78	78	78	78	78	78	78	76	76	76	75	75	73	73	73	68	72	72	63	70	68	60
				Exposed	78	78	78	78	78	78	78	78	78	78	78	78	78	78	78	78	78	78	78	78	77	78	78	73	78	76	67	76	70	62	75	65	58	73	61	54	72	58	51	70	55	48
		12:12	45	Non-Exposed	81	81	81	81	81	81	81	81	81	81	81	81	81	81	81	81	81	81	81	81	81	81	81	81	81	81	81	79	79	78	77	77	73	76	76	67	74	72	63	72	67	59
				Exposed	81	81	81	81	81	81	81	81	81	81	81	81	81	81	81	81	81	80	81	81	76	81	81	73	81	76	67	79	70	62	77	65	58	76	61	54	74	58	51	72	55	48
	C	Flat	0	Non-Exposed	73	73	73	73	73	73	73	73	73	73	73	73	73	73	73	73	73	73	73	73	71	73	73	67	73	73	62	73	69	58	73	64	54	71	60	51	67	57	48	63	53	0
				Exposed	73	73	73	73	73	73	73	73	68	73	73	65	73	73	61	73	71	59	73	67	56	73	64	54	73	59	50	73	55	47	73	52	0	73	49	0	73	0	0	73	0	0
		1:12	4.8	Non-Exposed	68	68	68	68	68	68	68	68	68	68	68	68	68	68	68	68	68	68	68	68	68	68	68	67	68	68	62	68	68	57	68	64	54	68	60	51	66	56	48	62	53	0
				Exposed	68	68	68	68	68	68	68	68	68	68	68	64	68	68	61	68	68	59	68	67	56	68	64	54	68	59	50	68	55	47	68	52	0	68	49	0	68	0	0	68	0	0
		2:12	9.5	Non-Exposed	65	65	65	65	65	65	65	65	65	65	65	65	65	65	65	65	65	65	65	65	65	65	65	63	65	64	58	65	59	54	65	55	51	64	52	47	61	49	0	57	47	0
				Exposed	65	65	65	65	65	65	65	65	63	65	65	60	65	63	58	65	61	55	65	58	53	65	56	51	65	52	47	65	48	0	65	0	0	65	0	0	64	0	0	0	0	0
		3:12	14.0	Non-Exposed	62	62	62	62	62	62	62	62	62	62	62	62	62	62	62	62	62	62	62	62	62	62	62	62	62	62	58	62	59	54	62	55	50	62	52	47	60	49	0	57	46	0
				Exposed	62	62	62	62	62	62	62	62	62	62	62	60	62	62	57	62	60	55	62	58	53	62	56	51	62	52	47	62	48	0	62	0	0	62	0	0	62	0	0	0	0	0
		4:12	18.4	Non-Exposed	62	62	62	62	62	62	62	62	62	62	62	62	62	62	62	62	62	62	62	62	62	62	62	62	62	62	58	62	59	54	62	55	50	62	52	47	60	49	0	57	46	0
				Exposed	62	62	62	62	62	62	62	62	62	62	62	60	62	62	57	62	60	55	62	58	53	62	56	51	62	52	47	62	48	0	62	0	0	62	0	0	62	0	0	0	0	0
		5:12	22.6	Non-Exposed	63	63	63	63	63	63	63	63	63	63	63	63	63	63	63	63	63	63	63	63	63	63	63	63	63	63	63	63	63	59	63	61	55	63	57	51	63	54	48	62	51	45
				Exposed	63	63	63	63	63	63	63	63	63	63	63	63	63	63	63	63	63	60	63	63	58	63	61	55	63	56	51	63	53	47	63	49	43	63	46	0	63	0	0	62	0	0
35		6:12	26.6	Non-Exposed	65	65	65	65	65	65	65	65	65	65	65	65	65	65	65	65	65	65	65	65	65	65	65	65	65	65	64	65	65	59	65	60	55	65	57	51	64	54	48	63	51	45
				Exposed	65	65	65	65	65	65	65	65	65	65	65	65	65	65	63	65	65	60	65	63	57	65	61	55	65	56	50	65	53	47	65	49	0	65	46	0	64	0	0	63	0	0
		7:12	30.3	Non-Exposed	67	67	67	67	67	67	67	67	67	67	67	67	67	67	67	67	67	67	67	67	67	67	67	67	65	65	65	64	64	64	63	63	60	61	61	56	60	60	53	59	57	50
				Exposed	67	67	67	67	67	67	67	67	67	67	67	67	67	67	67	67	67	66	67	67	63	67	67	60	65	63	56	64	59	52	63	55	48	61	52	45	60	49	0	59	46	0
		8:12	33.7	Non-Exposed	70	70	70	70	70	70	70	70	70	70	70	70	70	70	70	70	70	70	69	69	69	69	69	69	67	67	67	66	66	65	64	64	60	63	63	56	62	60	53	60	57	50
				Exposed	70	70	70	70	70	70	70	70	70	70	70	70	70	70	70	70	70	66	69	69	63	69	69	60	67	63	56	66	59	52	64	55	48	63	52	45	62	49	0	60	0	0
		9:12	36.9	Non-Exposed	73	73	73	73	73	73	73	73	73	73	73	73	73	73	73	72	72	72	72	72	72	71	71	71	69	69	69	68	68	64	66	66	60	65	63	56	63	60	53	60	57	50
				Exposed	73	73	73	73	73	73	73	73	73	73	73	73	73	73	69	72	72	66	72	72	63	71	68	60	69	63	56	68	59	52	66	55	48	65	52	45	63	49	0	62	0	0
		10:12	39.8	Non-Exposed	75	75	75	75	75	75	75	75	75	75	75	75	75	75	75	75	75	75	74	74	74	73	73	73	72	72	70	70	70	64	68	68	60	66	63	56	63	60	53	60	57	50
				Exposed	75	75	75	75	75	75	75	75	75	75	75	73	75	75	69	75	75	66	74	72	63	73	68	60	72	63	55	70	58	51	68	55	48	66	52	0	65	49	0	63	0	0
		11:12	42.5	Non-Exposed	78	78	78	78	78	78	78	78	78	78	78	78	78	78	78	78	78	78	77	77	77	76	76	76	74	74	70	72	72	64	70	68	60	67	63	56	63	60	53	59	56	50
				Exposed	78	78	78	78	78	78	78	78	77	78	78	73	78	78	69	78	75	66	77	71	63	76	68	60	74	63	55	72	58	51	70	55	48	68	52	0	66	49	0	64	0	0
		12:12	45	Non-Exposed	81	81	81	81	81	81	81	81	81	81	81	81	81	81	81	80	80	80	79	79	79	78	78	76	76	76	70	74	73	64	72	68	60	67	63	56	63	60	52	59	56	49
				Exposed	81	81	81	81	81	81	81	81	77	81	81	73	81	79	69	80	75	66	79	71	63	78	68	60	76	62	55	74	58	51	72	55	48	70	51	0	68	49	0	66	0	0
	D	Flat	0	Non-Exposed	73	73	73	73	73	73	73	73	73	73	73	73	73	73	71	73	73	67	73	73	64	73	73	61	73	68	57	73	63	53	69	59	49	64	55	46	61	52	0	57	49	0
				Exposed	73	73	70	73	73	65	73	73	62	73	71	59	73	67	56	73	64	54	73	61	52	73	59	50	73	55	0	73	51	0	73	47	0	73	0	0	73	0	0	73	0	0
		1:12	4.8	Non-Exposed	68	68	68	68	68	68	68	68	68	68	68	68	68	68	68	68	68	67	68	68	64	68	68	61	68	68	57	68	62	53	68	58	49	64	55	46	60	52	0	57	49	0
				Exposed	68	68	68	68	68	65	68	68	62	68	68	59	68	67	56	68	64	54	68	61	52	68	59	50	68	54	0	68	51	0	68	47	0	68	0	0	68	0	0	0	0	0
		2:12	9.5	Non-Exposed	65	65	65	65	65	65	65	65	65	65	65	65	65	65	65	65	65	62	65	65	60	65	63	57	65	58	53	65	54	50	63	51	46	59	48	0	56	0	0	53	0	0
				Exposed	65	65	65	65	65	61	65	64	58	65	61	55	65	58	53	65	56	51	65	53	48	65	51	47	65	47	0	65	0	0	64	0	0	63	0	0	0	0	0	0	0	0
		3:12	14.0	Non-Exposed	62	62	62	62	62	62	62	62	62	62	62	62	62	62	62	62	62	62	62	62	60	62	62	57	62	58	53	62	54	49	62	51	46	59	48	0	55	0	0	52	0	0
				Exposed	62	62	62	62	62	61	62	62	58	62	61	55	62	58	53	62	55	50	62	53	48	62	51	47	62	47	0	62	0	0	62	0	0	62	0	0	0	0	0	0	0	0
		4:12	18.4	Non-Exposed	62	62	62	62	62	62	62	62	62	62	62	62	62	62	62	62	62	62	62	62	59	62	62	57	62	58	53	62	54	49	62	51	46	59	48	0	55	0	0	52	0	0
				Exposed	62	62	62	62	62	61	62	62	58	62	60	55	62	58	53	62	55	50	62	53	48	62	51	46	62	47	0	62	0	0	62	0	0	0	0	0	0	0	0	0	0	0
		5:12	22.6	Non-Exposed	63	63	63	63	63	63	63	63	63	63	63	63	63	63	63	63	63	63	63	63	63	63	63	63	63	63	58	63	59	54	63	56	50	62	52	46	61	49	43	60	47	0
				Exposed	63	63	63	63	63	63	63	63	63	63	63	61	63	63	58	63	61	55	63	58	52	63	56	50	63	52	46	63	48	0	63	0	0	62	0	0	61	0	0	60	0	0
		6:12	26.6	Non-Exposed	65	65	65	65	65	65	65	65	65	65	65	65	65	65	65	65	65	65	65	65	65	65	65	65	65	64	58	65	59	53	65	55	50	64	52	46	63	49	0	60	47	0
				Exposed	65	65	65	65	65	65	65	65	64	65	65	60	65	63	57	65	60	55	65	58	52	65	56	50	65	52	46	65	48	0	65	0	0	64	0	0	63	0	0	61	0	0
		7:12	30.3	Non-Exposed	67	67	67	67	67	67	67	67	67	67	67	67	67	67	67	67	67	67	66	66	66	65	65	65	64	64	64	62	62	59	61	61	55	60	58	51	58	55	48	55	52	45
				Exposed	67	67	67	67	67	67	67	67	67	67	67	67	67	67	63	67	67	60	66	65	58	65	62	55	64	58	51	62	54	47	61	51	0	60	48	0	58	0	0	0	0	0
		8:12	33.7	Non-Exposed	70	70	70	70	70	70	70	70	70	70	70	70	69	69	69	69	69	69	68	68	68	67	67	67	66	66	63	64	64	59	62	62	55	61	58	51	58	55	48	55	52	45
				Exposed	70	70	70	70	70	70	70	70	70	70	70	66	69	69	63	69	68	60	68	65	57	67	62	55	66	58	51	64	54	47	62	50	0	61	47	0	59	0	0	0	0	0
		9:12	36.9	Non-Exposed	73	73	73	73	73	73	73	73	73	73	73	73	72	72	72	71	71	71	70	70	70	69	69	69	67	67	63	66	66	59	64	62	55	61	58	51	58	55	48	55	52	45
				Exposed	73	73	73	73	73	73	73	73	70	73	73	66	72	72	63	71	68	60	70	65	57	69	62	55	67	58	51	66	54	47	64	50	0	62	47	0	61	0	0	0	0	0
		10:12	39.8	Non-Exposed	75	75	75	75	75	75	75	75	75	75	75	75	74	74	74	73	73	73	72	72	72	71	71	69	69	69	63	68	66	59	65	62	55	61	58	51	58	55	48	55	52	45
				Exposed	75	75	75	75	75	74	75	75	70	75	75	66	74	71	63	73	68	60	72	65	57	71	62	55	69	58	51	68	54	47	66	50	0	64	47	0	62	0	0	0	0	0
		11:12	42.5	Non-Exposed	78	78	78	78	78	78	78	78	78	78	78	78	77	77	77	76	76	76	75	75	72	74	74	69	72	72	63	70	66	58	65	62	55	61	58	51	58	55	48	55	52	45
				Exposed	78	78	78	78	78	74	78	78	70	78	75	66	77	71	63	76	68	60	75	65	57	74	62	55	72	57	51	70	54	47	67	50	0	65	47	0	63	0	0	0	0	0
		12:12	45	Non-Exposed	81	81	81	81	81	81	81	81	81	80	80	80	79	79	79	78	78	76	77	77	72	76	76	69	74	72	63	71	66	58	65	62	54	61	58	51	58	55	48	55	52	45
				Exposed	81	81	78	81	81	74	81	79	70	80	75	66	79	71	63	78	68	60	77	64	57	76	62	55	74	57	50	71	54	47	69	50	0	67	47	0	65	0	0	0	0	0

Tamarack 2.3 Rail – Gable Flush-Mount on 30 Foot Maximum Mean Roof Height – Landscape – Panel Width = 45 Inches or Less

Ground Snow Load	Exposure Category	Roof Pitch	Roof Angle	Wind Speed (mph)	95			100			105			110			115			120			125			130			140			150			160			170			180			190		
				Roof Area	1	2	3	1	2	3	1	2	3	1	2	3	1	2	3	1	2	3	1	2	3	1	2	3	1	2	3	1	2	3	1	2	3	1	2	3	1	2	3	1	2	3
40	B	Flat	0	Non-Exposed	69	69	69	69	69	69	69	69	69	69	69	69	69	69	69	69	69	69	69	69	69	69	69	69	69	69	69	69	69	69	69	69	64	69	69	60	69	68	57	69	64	54
				Exposed	69	69	69	69	69	69	69	69	69	69	69	69	69	69	69	69	69	69	69	69	68	69	69	65	69	69	60	69	66	56	69	62	52	69	58	49	69	55	46	69	52	0
		1:12	4.8	Non-Exposed	64	64	64	64	64	64	64	64	64	64	64	64	64	64	64	64	64	64	64	64	64	64	64	64	64	64	64	64	64	64	64	64	64	64	64	60	64	64	57	64	64	54
				Exposed	64	64	64	64	64	64	64	64	64	64	64	64	64	64	64	64	64	64	64	64	64	64	64	64	64	64	60	64	64	55	64	62	52	64	58	49	64	55	0	64	52	0
		2:12	9.5	Non-Exposed	61	61	61	61	61	61	61	61	61	61	61	61	61	61	61	61	61	61	61	61	61	61	61	61	61	61	61	61	61	61	61	61	60	61	61	56	61	58	53	61	55	50
				Exposed	61	61	61	61	61	61	61	61	61	61	61	61	61	61	61	61	61	61	61	61	61	61	61	60	61	61	56	61	57	52	61	54	49	61	50	46	61	47	0	61	0	0
		3:12	14.0	Non-Exposed	58	58	58	58	58	58	58	58	58	58	58	58	58	58	58	58	58	58	58	58	58	58	58	58	58	58	58	58	58	58	58	58	58	58	58	56	58	58	53	58	55	50
				Exposed	58	58	58	58	58	58	58	58	58	58	58	58	58	58	58	58	58	58	58	58	58	58	58	58	58	58	56	58	57	52	58	53	49	58	50	46	58	47	0	58	0	0
		4:12	18.4	Non-Exposed	58	58	58	58	58	58	58	58	58	58	58	58	58	58	58	58	58	58	58	58	58	58	58	58	58	58	58	58	58	58	58	58	58	58	58	56	58	58	53	58	55	50
				Exposed	58	58	58	58	58	58	58	58	58	58	58	58	58	58	58	58	58	58	58	58	58	58	58	58	58	58	56	58	57	52	58	53	49	58	50	46	58	47	0	58	0	0
		5:12	22.6	Non-Exposed	59	59	59	59	59	59	59	59	59	59	59	59	59	59	59	59	59	59	59	59	59	59	59	59	59	59	59	59	59	59	59	59	59	59	59	59	59	59	58	59	59	55
				Exposed	59	59	59	59	59	59	59	59	59	59	59	59	59	59	59	59	59	59	59	59	59	59	59	59	59	59	59	59	59	57	59	58	53	59	55	49	59	52	46	59	49	0
		6:12	26.6	Non-Exposed	61	61	61	61	61	61	61	61	61	61	61	61	61	61	61	61	61	61	61	61	61	61	61	61	61	61	61	61	61	61	61	61	61	61	61	61	61	61	58	61	60	54
				Exposed	61	61	61	61	61	61	61	61	61	61	61	61	61	61	61	61	61	61	61	61	61	61	61	61	61	61	61	61	61	57	61	58	53	61	55	49	61	52	46	61	49	0
		7:12	30.3	Non-Exposed	63	63	63	63	63	63	63	63	63	63	63	63	63	63	63	63	63	63	63	63	63	63	63	63	63	63	63	63	63	63	63	63	63	62	62	62	61	61	61	60	60	60
				Exposed	63	63	63	63	63	63	63	63	63	63	63	63	63	63	63	63	63	63	63	63	63	63	63	63	63	63	63	63	63	63	63	63	58	62	61	54	61	58	51	60	55	48
		8:12	33.7	Non-Exposed	66	66	66	66	66	66	66	66	66	66	66	66	66	66	66	66	66	66	66	66	66	66	66	66	66	66	66	66	66	66	65	65	65	64	64	64	63	63	63	62	62	60
				Exposed	66	66	66	66	66	66	66	66	66	66	66	66	66	66	66	66	66	66	66	66	66	66	66	66	66	66	66	66	66	62	65	65	58	64	61	54	63	58	51	62	55	48
		9:12	36.9	Non-Exposed	69	69	69	69	69	69	69	69	69	69	69	69	69	69	69	69	69	69	69	69	69	69	69	69	69	69	69	68	68	68	67	67	67	66	66	66	65	65	63	64	64	60
				Exposed	69	69	69	69	69	69	69	69	69	69	69	69	69	69	69	69	69	69	69	69	69	69	69	69	69	69	67	68	68	62	67	65	58	66	61	54	65	58	51	64	55	48
		10:12	39.8	Non-Exposed	72	72	72	72	72	72	72	72	72	72	72	72	72	72	72	72	72	72	72	72	72	72	72	72	72	72	72	71	71	71	70	70	70	68	68	68	67	67	63	66	66	60
				Exposed	72	72	72	72	72	72	72	72	72	72	72	72	72	72	72	72	72	72	72	72	72	72	72	72	72	72	67	71	70	62	70	65	58	68	61	54	67	58	51	66	55	48
		11:12	42.5	Non-Exposed	75	75	75	75	75	75	75	75	75	75	75	75	75	75	75	75	75	75	75	75	75	75	75	75	75	75	75	73	73	73	72	72	72	71	71	68	69	69	63	68	68	60
				Exposed	75	75	75	75	75	75	75	75	75	75	75	75	75	75	75	75	75	75	75	75	75	75	75	73	75	75	67	73	70	62	72	65	58	71	61	54	69	58	51	68	55	48
		12:12	45	Non-Exposed	78	78	78	78	78	78	78	78	78	78	78	78	78	78	78	78	78	78	78	78	78	78	78	78	78	78	78	76	76	76	74	74	73	73	73	67	71	71	63	70	67	59
				Exposed	78	78	78	78	78	78	78	78	78	78	78	78	78	78	78	78	78	78	78	78	76	78	78	73	78	76	67	76	70	62	74	65	58	73	61	54	71	58	51	70	55	48
	C	Flat	0	Non-Exposed	69	69	69	69	69	69	69	69	69	69	69	69	69	69	69	69	69	69	69	69	69	69	69	67	69	69	62	69	69	58	69	64	54	69	60	51	67	57	48	63	53	0
				Exposed	69	69	69	69	69	69	69	69	68	69	69	65	69	69	61	69	69	59	69	67	56	69	64	54	69	59	50	69	55	47	69	52	0	69	49	0	69	0	0	69	0	0
		1:12	4.8	Non-Exposed	64	64	64	64	64	64	64	64	64	64	64	64	64	64	64	64	64	64	64	64	64	64	64	64	64	64	62	64	64	57	64	64	54	64	60	51	64	56	48	62	53	0
				Exposed	64	64	64	64	64	64	64	64	64	64	64	64	64	64	61	64	64	59	64	64	56	64	64	54	64	59	50	64	55	47	64	52	0	64	49	0	64	0	0	64	0	0
		2:12	9.5	Non-Exposed	61	61	61	61	61	61	61	61	61	61	61	61	61	61	61	61	61	61	61	61	61	61	61	61	61	61	58	61	59	54	61	55	51	61	52	47	61	49	0	57	47	0
				Exposed	61	61	61	61	61	61	61	61	61	61	61	60	61	61	58	61	61	55	61	58	53	61	56	51	61	52	47	61	48	0	61	0	0	61	0	0	61	0	0	0	0	0
		3:12	14.0	Non-Exposed	58	58	58	58	58	58	58	58	58	58	58	58	58	58	58	58	58	58	58	58	58	58	58	58	58	58	58	58	58	54	58	55	50	58	52	47	58	49	0	57	46	0
				Exposed	58	58	58	58	58	58	58	58	58	58	58	58	58	58	57	58	58	55	58	58	53	58	56	51	58	52	47	58	48	0	58	0	0	58	0	0	58	0	0	0	0	0
		4:12	18.4	Non-Exposed	58	58	58	58	58	58	58	58	58	58	58	58	58	58	58	58	58	58	58	58	58	58	58	58	58	58	58	58	58	54	58	55	50	58	52	47	58	49	0	57	46	0
				Exposed	58	58	58	58	58	58	58	58	58	58	58	58	58	58	57	58	58	55	58	58	53	58	56	51	58	52	47	58	48	0	58	0	0	58	0	0	58	0	0	0	0	0
		5:12	22.6	Non-Exposed	59	59	59	59	59	59	59	59	59	59	59	59	59	59	59	59	59	59	59	59	59	59	59	59	59	59	59	59	59	59	59	59	55	59	57	51	59	54	48	59	51	45
				Exposed	59	59	59	59	59	59	59	59	59	59	59	59	59	59	59	59	59	59	59	59	58	59	59	55	59	56	51	59	53	47	59	49	43	59	46	0	59	0	0	59	0	0
		6:12	26.6	Non-Exposed	61	61	61	61	61	61	61	61	61	61	61	61	61	61	61	61	61	61	61	61	61	61	61	61	61	61	61	61	61	59	61	60	55	61	57	51	61	54	48	60	51	45
				Exposed	61	61	61	61	61	61	61	61	61	61	61	61	61	61	61	61	61	60	61	61	57	61	61	55	61	56	50	61	53	47	61	49	0	61	46	0	61	0	0	60	0	0
		7:12	30.3	Non-Exposed	63	63	63	63	63	63	63	63	63	63	63	63	63	63	63	63	63	63	63	63	63	63	63	63	63	63	63	62	62	62	60	60	60	59	59	56	58	58	53	57	57	50
				Exposed	63	63	63	63	63	63	63	63	63	63	63	63	63	63	63	63	63	63	63	63	63	63	63	60	63	63	56	62	59	52	60	55	48	59	52	45	58	49	0	57	46	0
		8:12	33.7	Non-Exposed	66	66	66	66	66	66	66	66	66	66	66	66	66	66	66	66	66	66	66	66	66	66	66	66	64	64	64	63	63	63	62	62	60	61	61	56	59	59	53	58	57	50
				Exposed	66	66	66	66	66	66	66	66	66	66	66	66	66	66	66	66	66	66	66	66	63	66	66	60	64	63	56	63	59	52	62	55	48	61	52	45	59	49	0	58	0	0
		9:12	36.9	Non-Exposed	69	69	69	69	69	69	69	69	69	69	69	69	69	69	69	69	69	69	69	69	69	68	68	68	67	67	67	65	65	64	64	64	60	62	62	56	61	60	53	60	57	50
				Exposed	69	69	69	69	69	69	69	69	69	69	69	69	69	69	69	69	69	66	69	69	63	68	68	60	67	63	56	65	59	52	64	55	48	62	52	45	61	49	0	60	0	0
		10:12	39.8	Non-Exposed	72	72	72	72	72	72	72	72	72	72	72	72	72	72	72	72	72	72	71	71	71	70	70	70	69	69	69	67	67	67	66	66	60	64	63	56	63	60	53	60	57	50
				Exposed	72	72	72	72	72	72	72	72	72	72	72	72	72	72	69	72	72	66	71	71	63	70	68	60	69	63	55	67	58	51	66	55	48	64	52	0	63	49	0	61	0	0
		11:12	42.5	Non-Exposed	75	75	75	75	75	75	75	75	75	75	75	75	75	75	75	74	74	74	74	74	74	73	73	73	71	71	70	69	69	64	68	68	60	66	63	56	63	60	53	59	56	50
				Exposed	75	75	75	75	75	75	75	75	75	75	75	73	75	75	69	74	74	66	74	71	63	73	68	60	71	63	55	69	58	51	68	55	48	66	52	0	64	49	0	63	0	0
		12:12	45	Non-Exposed	78	78	78	78	78	78	78	78	78	78	78	78	78	78	78	77	77	77	76	76	76	75	75	75	74	74	70	72	72	64	70	68	60	67	63	56	63	60	52	59	56	49
				Exposed	78	78	78	78	78	78	78	78	78	77	78	78	73	78	78	69	77	75	66	76	71	63	75	68	60	74	62	55	72	58	51	70	55	48	68	51	0	66	49	0	64	0	0
	D	Flat	0	Non-Exposed	69	69	69	69	69	69	69	69	69	69	69	69	69	69	69	69	69	67	69	69	64	69	69	61	69	68	57	69	63	53	69	59	49	64	55	46	61	52	0	57	49	0
				Exposed	69	69	69	69	69	65	69	69	62	69	69	59	69	67	56	69	64	54	69	61	52	69	59	50	69	55	0	69	51	0	69	47	0	69	0	0	69	0	0	69	0	0
		1:12	4.8	Non-Exposed	64	64	64	64	64	64	64	64	64	64	64	64	64	64	64	64	64	64	64	64	64	64	64	61	64	64	57	64	62	53	64	58	49	64	55	46	60	52	0	57	49	0
				Exposed	64	64	64	64	64	64	64	64	62	64	64	59	64	64	56	64	64	54	64	61	52	64	59	50	64	54	0	64	51	0	64	47	0	64	0	0	64	0	0	0	0	0
		2:12	9.5	Non-Exposed	61	61	61	61	61	61	61	61	61	61	61	61	61	61	61	61	61	61	61	61	60	61	61	57	61	58	53	61	54	50	61	51	46	59	48	0	56	0	0	53	0	0
				Exposed	61	61	61	61	61	61	61	61	58	61	61	55	61	58	53	61	56	51	61	53	48	61	51	47	61	47	0	61	0	0	61	0	0	61	0	0	0	0	0	0	0	0
		3:12	14.0	Non-Exposed	58	58	58	58	58	58	58	58	58	58	58	58	58	58	58	58	58	58	58	58	58	58	58	57	58	58	53	58	54	49	58	51	46	58	48	0	55	0	0	52	0	0
				Exposed	58	58	58	58	58	58	58	58	58	58	58	55	58	58	53	58	55	50	58	53	48	58	51	47	58	47	0	58	0	0	58	0	0	58	0	0	0	0	0	0	0	0
		4:12	18.4	Non-Exposed	58	58	58	58	58	58	58	58	58	58	58	58	58	58	58	58	58	58	58	58	58	58	58	57	58	58	53	58	54	49	58	51	46	58	48	0	55	0	0	52	0	0
				Exposed	58	58	58	58	58	58	58	58	58	58	58	55	58	58	53	58	55	50	58	53	48	58	51	46	58	47	0	58	0	0	58	0	0	0	0	0	0	0	0	0	0	0
		5:12	22.6	Non-Exposed	59	59	59	59	59	59	59	59	59	59	59	59	59	59	59	59	59	59	59	59	59	59	59	59	59	59	58	59	59	54	59	56	50	59	52	46	59	49	43	58	47	0
				Exposed	59	59	59	59	59	59	59	59	59	59	59	59	59	59	59	59	59	55	59	58	52	59	56	50	59	52	46	59	48	0	59	0	0	59	0	0	59	0	0	58	0	0
		6:12	26.6	Non-Exposed	61	61	61	61	61	61	61	61	61	61	61	61	61	61	61	61	61	61	61	61	61	61	61	61	61	61	58	61	59	53	61	55	50	61	52	46	60	49	0	59	47	0
				Exposed	61	61	61	61	61	61	61	61	61	61	61	60	61	61	57	61	60	55	61	58	52	61	56	50	61	52	46	61	48	0	61	0	0	61	0	0	60	0	0	59	0	0
		7:12	30.3	Non-Exposed	63	63	63	63	63	63	63	63	63	63	63	63	63	63	63	63	63	63	63	63	63	63	63	63	61	61	61	60	60	59	59	59	55	57	57	51	56	55	48	55	52	45
				Exposed	63	63	63	63	63	63	63	63	63	63	63	63	63	63	63	63	63	60	63	63	58	63	62	55	61	58	51	60	54	47	59	51	0	57	48	0	56	0	0	0	0	0
		8:12	33.7	Non-Exposed	66	66	66	66	66	66	66	66	66	66	66	66	66	66	66	66	66	66	65	65	65	64	64	64	63	63	63	62	62	59	60	60	55	59	58	51	57	55	48	55	52	45
				Exposed	66	66	66	66	66	66	66	66	66	66	66	66	66	66	63	66	66	60	65	65	57	64	62	55	63	58	51	62	54	47	60	50	0	59	47	0	57	0	0	0	0	0
		9:12	36.9	Non-Exposed	69	69	69	69	69	69	69	69	69	69	69	69	69	69	69	68	68	68	67	67	67	66	66	66	65	65	63	63	63	59	62	62	55	60	58	51	58	55	48	55	52	45
				Exposed	69	69	69	69	69	69	69	69	69	69	69	66	69	69	63	68	68	60	67	65	57	66	62	55	65	58	51	63	54	47	62	50	0	60	47	0	59	0	0	0	0	0
		10:12	39.8	Non-Exposed	72	72	72	72	72	72	72	72	72	72	72	72	71	71	71	70	70	70	69	69	69	69	69	69	67	67	63	65	65	59	63	62	55	61	58	51	58	55	48	55	52	45
				Exposed	72	72	72	72	72	72	72	72	70	72	72	66	71	71	63	70	68	60	69	65	57	69	62	55	67	58	51	65	54	47	63	50	0	62	47	0	60	0	0	0	0	0
		11:12	42.5	Non-Exposed	75	75	75	75	75	75	75	75	75	75	75	75	74	74	74	73	73	73	72	72	72	71	71	69	69	69	63	67	66	58	65	62	55	61	58	51	58	55	48	55	52	45
				Exposed	75	75	75	75	75	74	75	75	70	75	75	66	74	71	63	73	68	60	72	65	57	71	62	55	69	57	51	67	54	47	65	50	0	63	47	0	62	0	0	0	0	0
		12:12	45	Non-Exposed	78	78	78	78	78	78	78	78	78	77	77	77	76	76	76	75	75	75	74	74	72	73	73	69	71	71	63	69	66	58	65	62	54	61	58	51	58	55	48	55	52	45
				Exposed	78	78	78	78	78	74	78	78	70	77	75	66	76	71	63	75	68	60	74	64	57	73	62	55	71	57	50	69	54	47	67	50	0	65	47	0	63	0	0	0	0	0

Tamarack 2.3 Rail – Gable Flush-Mount on 30 Foot Maximum Mean Roof Height – Landscape – Panel Width = 45 Inches or Less

Ground Snow Load	Exposure Category	Roof Pitch	Roof Angle	Wind Speed (mph)	95			100			105			110			115			120			125			130			140			150			160			170			180			190		
				Roof Area	1	2	3	1	2	3	1	2	3	1	2	3	1	2	3	1	2	3	1	2	3	1	2	3	1	2	3	1	2	3	1	2	3	1	2	3	1	2	3	1	2	3
45	B	Flat	0	Non-Exposed	65	65	65	65	65	65	65	65	65	65	65	65	65	65	65	65	65	65	65	65	65	65	65	65	65	65	65	65	65	65	65	65	64	65	65	60	65	65	57	65	64	54
				Exposed	65	65	65	65	65	65	65	65	65	65	65	65	65	65	65	65	65	65	65	65	65	65	65	65	65	65	60	65	65	56	65	62	52	65	58	49	65	55	46	65	52	0
		1:12	4.8	Non-Exposed	61	61	61	61	61	61	61	61	61	61	61	61	61	61	61	61	61	61	61	61	61	61	61	61	61	61	61	61	61	61	61	61	61	61	61	60	61	61	57	61	61	54
				Exposed	61	61	61	61	61	61	61	61	61	61	61	61	61	61	61	61	61	61	61	61	61	61	61	61	61	61	60	61	61	55	61	61	52	61	58	49	61	55	0	61	52	0
		2:12	9.5	Non-Exposed	57	57	57	57	57	57	57	57	57	57	57	57	57	57	57	57	57	57	57	57	57	57	57	57	57	57	57	57	57	57	57	57	57	57	57	56	57	57	53	57	55	50
				Exposed	57	57	57	57	57	57	57	57	57	57	57	57	57	57	57	57	57	57	57	57	57	57	57	57	57	57	56	57	57	52	57	54	49	57	50	46	57	47	0	57	0	0
		3:12	14.0	Non-Exposed	55	55	55	55	55	55	55	55	55	55	55	55	55	55	55	55	55	55	55	55	55	55	55	55	55	55	55	55	55	55	55	55	55	55	55	55	55	55	53	55	55	50
				Exposed	55	55	55	55	55	55	55	55	55	55	55	55	55	55	55	55	55	55	55	55	55	55	55	55	55	55	55	55	55	52	55	53	49	55	50	46	55	47	0	55	0	0
		4:12	18.4	Non-Exposed	55	55	55	55	55	55	55	55	55	55	55	55	55	55	55	55	55	55	55	55	55	55	55	55	55	55	55	55	55	55	55	55	55	55	55	55	55	55	53	55	55	50
				Exposed	55	55	55	55	55	55	55	55	55	55	55	55	55	55	55	55	55	55	55	55	55	55	55	55	55	55	55	55	55	52	55	53	49	55	50	46	55	47	0	55	0	0
		5:12	22.6	Non-Exposed	56	56	56	56	56	56	56	56	56	56	56	56	56	56	56	56	56	56	56	56	56	56	56	56	56	56	56	56	56	56	56	56	56	56	56	56	56	56	56	56	56	55
				Exposed	56	56	56	56	56	56	56	56	56	56	56	56	56	56	56	56	56	56	56	56	56	56	56	56	56	56	56	56	56	56	56	56	53	56	55	49	56	52	46	56	49	0
		6:12	26.6	Non-Exposed	58	58	58	58	58	58	58	58	58	58	58	58	58	58	58	58	58	58	58	58	58	58	58	58	58	58	58	58	58	58	58	58	58	58	58	58	58	58	58	58	58	54
				Exposed	58	58	58	58	58	58	58	58	58	58	58	58	58	58	58	58	58	58	58	58	58	58	58	58	58	58	58	58	58	57	58	58	53	58	55	49	58	52	46	58	49	0
		7:12	30.3	Non-Exposed	60	60	60	60	60	60	60	60	60	60	60	60	60	60	60	60	60	60	60	60	60	60	60	60	60	60	60	60	60	60	60	60	60	60	60	60	59	59	59	58	58	58
				Exposed	60	60	60	60	60	60	60	60	60	60	60	60	60	60	60	60	60	60	60	60	60	60	60	60	60	60	60	60	60	57	60	60	54	59	58	54	59	58	51	58	55	48
		8:12	33.7	Non-Exposed	63	63	63	63	63	63	63	63	63	63	63	63	63	63	63	63	63	63	63	63	63	63	63	63	63	63	63	63	63	63	63	63	63	63	63	63	62	62	56	58	58	50
				Exposed	63	63	63	63	63	63	63	63	63	63	63	63	63	63	63	63	63	63	63	63	63	63	63	63	63	63	63	63	63	62	63	63	58	63	58	54	62	61	55	58	54	0
		9:12	36.9	Non-Exposed	65	65	65	65	65	65	65	65	65	65	65	65	65	65	65	65	65	65	65	65	65	65	65	65	65	65	65	65	65	65	65	65	64	64	64	64	63	63	57	59	59	50
				Exposed	65	65	65	65	65	65	65	65	65	65	65	65	65	65	65	65	65	65	65	65	63	65	65	60	64	63	56	63	59	52	62	55	48	60	52	45	59	49	0	58	0	0
		10:12	39.8	Non-Exposed	69	69	69	69	69	69	69	69	69	69	69	69	69	69	69	69	69	69	68	68	68	68	68	68	66	66	66	65	65	64	64	64	60	62	62	56	61	60	53	59	57	50
				Exposed	69	69	69	69	69	69	69	69	69	69	69	69	69	69	69	69	69	66	68	68	63	68	68	60	66	63	55	65	58	51	64	55	48	62	52	0	61	49	0	59	0	0
		11:12	42.5	Non-Exposed	72	72	72	72	72	72	72	72	72	72	72	72	72	72	72	72	72	72	71	71	71	70	70	70	69	69	69	67	67	64	66	66	60	64	63	56	63	60	53	59	56	50
				Exposed	72	72	72	72	72	72	72	72	72	72	72	72	72	72	69	72	72	66	71	71	63	70	68	60	69	63	55	67	58	51	66	55	48	64	52	0	63	49	0	61	0	0
		12:12	45	Non-Exposed	75	75	75	75	75	75	75	75	75	75	75	75	75	75	75	74	74	74	74	74	74	73	73	73	71	71	70	69	69	64	68	68	60	66	63	56	63	60	52	59	56	49
				Exposed	75	75	75	75	75	75	75	75	75	75	75	73	75	75	69	74	74	66	74	71	63	73	68	60	71	62	55	69	58	51	68	55	48	66	51	0	64	49	0	63	0	0
	C	Flat	0	Non-Exposed	65	65	65	65	65	65	65	65	65	65	65	65	65	65	65	65	65	65	65	65	65	65	65	65	65	65	62	65	65	58	65	64	54	65	60	51	65	57	48	63	53	0
				Exposed	65	65	65	65	65	65	65	65	65	65	65	65	65	65	61	65	65	59	65	65	56	65	64	54	65	59	50	65	55	47	65	52	0	65	49	0	65	0	0	65	0	0
		1:12	4.8	Non-Exposed	61	61	61	61	61	61	61	61	61	61	61	61	61	61	61	61	61	61	61	61	61	61	61	61	61	61	61	61	61	57	61	61	54	61	60	51	61	56	48	61	53	0
				Exposed	61	61	61	61	61	61	61	61	61	61	61	61	61	61	61	61	61	59	61	61	56	61	61	54	61	59	50	61	55	47	61	52	0	61	49	0	61	0	0	61	0	0
		2:12	9.5	Non-Exposed	57	57	57	57	57	57	57	57	57	57	57	57	57	57	57	57	57	57	57	57	57	57	57	57	57	57	57	57	57	54	57	55	51	57	52	47	57	49	0	57	47	0
				Exposed	57	57	57	57	57	57	57	57	57	57	57	57	57	57	57	57	57	55	57	57	53	57	56	51	57	52	47	57	48	0	57	0	0	57	0	0	57	0	0	0	0	0
		3:12	14.0	Non-Exposed	55	55	55	55	55	55	55	55	55	55	55	55	55	55	55	55	55	55	55	55	55	55	55	55	55	55	55	55	55	54	55	55	50	55	52	47	55	49	0	55	46	0
				Exposed	55	55	55	55	55	55	55	55	55	55	55	55	55	55	55	55	55	55	55	55	53	55	55	51	55	52	47	55	48	0	55	0	0	55	0	0	55	0	0	0	0	0
		4:12	18.4	Non-Exposed	55	55	55	55	55	55	55	55	55	55	55	55	55	55	55	55	55	55	55	55	55	55	55	55	55	55	55	55	55	54	55	55	50	55	52	47	55	49	0	55	46	0
				Exposed	55	55	55	55	55	55	55	55	55	55	55	55	55	55	55	55	55	53	55	55	53	55	55	51	55	52	47	55	48	0	55	0	0	55	0	0	55	0	0	0	0	0
		5:12	22.6	Non-Exposed	56	56	56	56	56	56	56	56	56	56	56	56	56	56	56	56	56	56	56	56	56	56	56	56	56	56	56	56	56	56	56	56	55	56	56	51	56	54	48	56	51	45
				Exposed	56	56	56	56	56	56	56	56	56	56	56	56	56	56	56	56	56	56	56	56	56	56	56	55	56	56	51	56	53	47	56	49	43	56	46	0	56	0	0	56	0	0
		6:12	26.6	Non-Exposed	58	58	58	58	58	58	58	58	58	58	58	58	58	58	58	58	58	58	58	58	58	58	58	58	58	58	58	58	58	58	58	58	55	58	57	51	58	54	48	58	51	45
				Exposed	58	58	58	58	58	58	58	58	58	58	58	58	58	58	58	58	58	58	58	58	57	58	58	55	58	56	50	58	53	47	58	49	0	58	46	0	58	0	0	58	0	0
		7:12	30.3	Non-Exposed	60	60	60	60	60	60	60	60	60	60	60	60	60	60	60	60	60	60	60	60	60	60	60	60	60	60	60	59	59	59	58	58	58	57	57	56	56	56	53	55	55	50
				Exposed	60	60	60	60	60	60	60	60	60	60	60	60	60	60	60	60	60	60	60	60	60	60	60	60	60	60	56	59	59	52	58	55	48	57	52	45	56	49	0	55	46	0
		8:12	33.7	Non-Exposed	63	63	63	63	63	63	63	63	63	63	63	63	63	63	63	63	63	63	63	63	63	63	63	63	62	62	62	61	61	61	60	60	60	59	59	56	58	58	53	56	56	50
				Exposed	63	63	63	63	63	63	63	63	63	63	63	63	63	63	63	63	63	63	63	63	63	63	63	60	62	62	56	61	59	52	60	55	48	59	52	45	58	49	0	56	0	0
		9:12	36.9	Non-Exposed	65	65	65	65	65	65	65	65	65	65	65	65	65	65	65	65	65	65	65	65	65	65	65	65	64	64	64	63	63	63	62	62	60	60	60	56	59	59	53	58	57	50
				Exposed	65	65	65	65	65	65	65	65	65	65	65	65	65	65	65	65	65	65	65	65	63	65	65	60	64	63	56	63	59	52	62	55	48	60	52	45	59	49	0	58	0	0
		10:12	39.8	Non-Exposed	69	69	69	69	69	69	69	69	69	69	69	69	69	69	69	69	69	69	68	68	68	68	68	68	66	66	66	65	65	64	64	64	60	62	62	56	61	60	53	59	57	50
				Exposed	69	69	69	69	69	69	69	69	69	69	69	69	69	69	69	69	69	66	68	68	63	68	68	60	66	63	55	65	58	51	64	55	48	62	52	0	61	49	0	59	0	0
		11:12	42.5	Non-Exposed	72	72	72	72	72	72	72	72	72	72	72	72	72	72	72	72	72	72	71	71	71	70	70	70	69	69	69	67	67	64	66	66	60	64	63	56	63	60	53	59	56	50
				Exposed	72	72	72	72	72	72	72	72	72	72	72	72	72	72	69	72	72	66	71	71	63	70	68	60	69	63	55	67	58	51	66	55	48	64	52	0	63	49	0	61	0	0
		12:12	45	Non-Exposed	75	75	75	75	75	75	75	75	75	75	75	75	75	75	75	74	74	74	74	74	74	73	73	73	71	71	70	69	69	64	68	68	60	66	63	56	63	60	52	59	56	49
				Exposed	75	75	75	75	75	75	75	75	75	75	75	73	75	75	69	74	74	66	74	71	63	73	68	60	71	62	55	69	58	51	68	55	48	66	51	0	64	49	0	63	0	0
	D	Flat	0	Non-Exposed	65	65	65	65	65	65	65	65	65	65	65	65	65	65	65	65	65	65	65	65	64	65	65	61	65	65	57	65	63	53	65	59	49	64	55	46	61	52	0	57	49	0
				Exposed	65	65	65	65	65	65	65	65	62	65	65	59	65	65	56	65	64	54	65	61	52	65	59	50	65	55	0	65	51	0	65	47	0	65	0	0	65	0	0	65	0	0
		1:12	4.8	Non-Exposed	61	61	61	61	61	61	61	61	61	61	61	61	61	61	61	61	61	61	61	61	61	61	61	61	61	61	57	61	61	53	61	58	49	61	55	46	60	52	0	57	49	0
				Exposed	61	61	61	61	61	61	61	61	61	61	61	59	61	61	56	61	61	54	61	61	52	61	59	50	61	54	0	61	51	0	61	47	0	61	0	0	61	0	0	0	0	0
		2:12	9.5	Non-Exposed	57	57	57	57	57	57	57	57	57	57	57	57	57	57	57	57	57	57	57	57	57	57	57	57	57	57	53	57	54	50	57	51	46	57	48	0	56	0	0	53	0	0
				Exposed	57	57	57	57	57	57	57	57	57	57	57	55	57	57	53	57	56	51	57	53	48	57	51	47	57	47	0	57	0	0	57	0	0	57	0	0	0	0	0	0	0	0
		3:12	14.0	Non-Exposed	55	55	55	55	55	55	55	55	55	55	55	55	55	55	55	55	55	55	55	55	55	55	55	55	55	55	53	55	54	49	55	51	46	55	48	0	55	0	0	52	0	0
				Exposed	55	55	55	55	55	55	55	55	55	55	55	55	55	55	53	55	55	50	55	53	48	55	51	47	55	47	0	55	0	0	55	0	0	55	0	0	0	0	0	0	0	0
		4:12	18.4	Non-Exposed	55	55	55	55	55	55	55	55	55	55	55	55	55	55	55	55	55	55	55	55	55	55	55	55	55	55	53	55	54	49	55	51	46	55	48	0	55	0	0	52	0	0
				Exposed	55	55	55	55	55	55	55	55	55	55	55	55	55	55	53	55	55	50	55	53	48	55	51	46	55	47	0	55	0	0	55	0	0	0	0	0	0	0	0	0	0	0
		5:12	22.6	Non-Exposed	56	56	56	56	56	56	56	56	56	56	56	56	56	56	56	56	56	56	56	56	56	56	56	56	56	56	56	56	56	54	56	56	50	56	52	46	56	49	43	56	47	0
				Exposed	56	56	56	56	56	56	56	56	56	56	56	56	56	56	56	56	56	55	56	56	52	56	56	50	56	52	46	56	48	0	56	0	0	56	0	0	56	0	0	56	0	0
		6:12	26.6	Non-Exposed	58	58	58	58	58	58	58	58	58	58	58	58	58	58	58	58	58	58	58	58	58	58	58	58	58	58	58	58	58	53	58	55	50	58	52	46	58	49	0	57	47	0
				Exposed	58	58	58	58	58	58	58	58	58	58	58	58	58	58	57	58	58	55	58	58	52	58	56	50	58	52	46	58	48	0	58	0	0	58	0	0	58	0	0	57	0	0
		7:12	30.3	Non-Exposed	60	60	60	60	60	60	60	60	60	60	60	60	60	60	60	60	60	60	60	60	60	60	60	60	59	59	59	58	58	58	57	57	55	56	56	51	54	54	48	53	52	45
				Exposed	60	60	60	60	60	60	60	60	60	60	60	60	60	60	60	60	60	60	60	60	58	60	60	55	59	58	51	58	54	47	57	51	0	56	48	0	54	0	0	0	0	0
		8:12	33.7	Non-Exposed	63	63	63	63	63	63	63	63	63	63	63	63	63	63	63	63	63	63	63	63	63	62	62	62	61	61	61	59	59	59	58	58	55	57	57	51	56	55	48	55	52	45
				Exposed	63	63	63	63	63	63	63	63	63	63	63	63	63	63	63	63	63	60	63	63	57	62	62	55	61	58	51	59	54	47	58	50	0	57	47	0	56	0	0	0	0	0
		9:12	36.9	Non-Exposed	65	65	65	65	65	65	65	65	65	65	65	65	65	65	65	65	65	65	65	65	65	64	64	64	63	63	63	61	61	59	60	60	55	59	58	51	57	55	48	55	52	45
				Exposed	65	65	65	65	65	65	65	65	65	65	65	65	65	65	63	65	65	60	65	65	57	64	62	55	63	58	51	61	54	47	60	50	0	59	47	0	57	0	0	0	0	0
		10:12	39.8	Non-Exposed	69	69	69	69	69	69	69	69	69	69	69	69	68	68	68	68	68	68	67	67	67	66	66	66	65	65	63	63	63	59	62	62	55	60	58	51	58	55	48	55	52	45
				Exposed	69	69	69	69	69	69	69	69	69	69	69	66	68	68	63	68	68	60	67	65	57	66	62	55	65	58	51	63	54	47	62	50	0	60	47	0	59	0	0	0	0	0
		11:12	42.5	Non-Exposed	72	72	72	72	72	72	72	72	72	72	72	72	71	71	71	70	70	70	69	69	69	68	68	68	67	67	63	65	65	58	63	62	55	61	58	51	58	55	48	55	52	45
				Exposed	72	72	72	72	72	72	70	72	72	66	71	71	63	70	68	60	69	65	57	68	62	55	67	57	51	65	54	47	63	50	0	62	47	0	60	0	0	0	0	0	0	0
		12:12	45	Non-Exposed	75	75	75	75	75	75	75	75	75	75	75	75	74	74	74	73	73	73	72	72	72	71	71	69	69	69	63	67	66	58	65	62	54	61	58	51	58	55	48	55	52	45
				Exposed	75	75	75	75	75	74	75	75	70	75	75	66	74	71	63	73	68	60	72	64	57	71	62	55	69	57	50	67	54	47	65	50	0	64	47	0	62	0	0	0	0	0

Tamarack 2.3 Rail – Gable Flush-Mount on 30 Foot Maximum Mean Roof Height – Landscape – Panel Width = 45 Inches or Less

Ground Snow Load	Exposure Category	Roof Pitch	Roof Angle	Wind Speed (mph)	95			100			105			110			115			120			125			130			140			150			160			170			180			190		
				Roof Area	1	2	3	1	2	3	1	2	3	1	2	3	1	2	3	1	2	3	1	2	3	1	2	3	1	2	3	1	2	3	1	2	3	1	2	3	1	2	3	1	2	3
50	B	Flat	0	Non-Exposed	62	62	62	62	62	62	62	62	62	62	62	62	62	62	62	62	62	62	62	62	62	62	62	62	62	62	62	62	62	62	62	62	62	62	62	60	62	62	57	62	62	54
				Exposed	62	62	62	62	62	62	62	62	62	62	62	62	62	62	62	62	62	62	62	62	62	62	62	62	62	62	60	62	62	56	62	62	52	62	58	49	62	55	46	62	52	0
		1:12	4.8	Non-Exposed	58	58	58	58	58	58	58	58	58	58	58	58	58	58	58	58	58	58	58	58	58	58	58	58	58	58	58	58	58	58	58	58	58	58	58	58	58	58	57	58	58	54
				Exposed	58	58	58	58	58	58	58	58	58	58	58	58	58	58	58	58	58	58	58	58	58	58	58	58	58	58	58	58	58	55	58	58	52	58	58	49	58	55	0	58	52	0
		2:12	9.5	Non-Exposed	55	55	55	55	55	55	55	55	55	55	55	55	55	55	55	55	55	55	55	55	55	55	55	55	55	55	55	55	55	55	55	55	55	55	55	55	55	55	53	55	55	50
				Exposed	55	55	55	55	55	55	55	55	55	55	55	55	55	55	55	55	55	55	55	55	55	55	55	55	55	55	55	55	55	52	55	54	49	55	50	46	55	47	0	55	0	0
		3:12	14.0	Non-Exposed	52	52	52	52	52	52	52	52	52	52	52	52	52	52	52	52	52	52	52	52	52	52	52	52	52	52	52	52	52	52	52	52	52	52	52	52	52	52	52	52	52	50
				Exposed	52	52	52	52	52	52	52	52	52	52	52	52	52	52	52	52	52	52	52	52	52	52	52	52	52	52	52	52	52	52	52	52	49	52	50	46	52	47	0	52	0	0
		4:12	18.4	Non-Exposed	52	52	52	52	52	52	52	52	52	52	52	52	52	52	52	52	52	52	52	52	52	52	52	52	52	52	52	52	52	52	52	52	52	52	52	52	52	52	52	52	52	50
				Exposed	52	52	52	52	52	52	52	52	52	52	52	52	52	52	52	52	52	52	52	52	52	52	52	52	52	52	52	52	52	52	52	52	49	52	50	46	52	47	0	52	0	0
		5:12	22.6	Non-Exposed	54	54	54	54	54	54	54	54	54	54	54	54	54	54	54	54	54	54	54	54	54	54	54	54	54	54	54	54	54	54	54	54	54	54	54	54	54	54	54	54	54	54
				Exposed	54	54	54	54	54	54	54	54	54	54	54	54	54	54	54	54	54	54	54	54	54	54	54	54	54	54	54	54	54	54	54	54	53	54	54	49	54	52	46	54	49	0
		6:12	26.6	Non-Exposed	55	55	55	55	55	55	55	55	55	55	55	55	55	55	55	55	55	55	55	55	55	55	55	55	55	55	55	55	55	55	55	55	55	55	55	55	55	55	55	55	55	54
				Exposed	55	55	55	55	55	55	55	55	55	55	55	55	55	55	55	55	55	55	55	55	55	55	55	55	55	55	55	55	55	55	55	55	53	55	55	49	55	52	46	55	49	0
		7:12	30.3	Non-Exposed	57	57	57	57	57	57	57	57	57	57	57	57	57	57	57	57	57	57	57	57	57	57	57	57	57	57	57	57	57	57	57	57	57	57	57	57	57	57	57	56	56	56
				Exposed	57	57	57	57	57	57	57	57	57	57	57	57	57	57	57	57	57	57	57	57	57	57	57	57	57	57	57	57	57	57	57	57	57	57	57	54	57	57	51	56	55	48
		8:12	33.7	Non-Exposed	60	60	60	60	60	60	60	60	60	60	60	60	60	60	60	60	60	60	60	60	60	60	60	60	60	60	60	60	60	60	60	60	60	60	60	60	59	59	59	58	58	58
				Exposed	60	60	60	60	60	60	60	60	60	60	60	60	60	60	60	60	60	60	60	60	60	60	60	60	60	60	60	60	60	60	60	60	58	60	60	54	59	58	51	58	55	48
		9:12	36.9	Non-Exposed	62	62	62	62	62	62	62	62	62	62	62	62	62	62	62	62	62	62	62	62	62	62	62	62	62	62	62	62	62	62	62	62	62	62	62	62	61	61	61	60	60	60
				Exposed	62	62	62	62	62	62	62	62	62	62	62	62	62	62	62	62	62	62	62	62	62	62	62	62	62	62	62	62	62	62	62	62	58	62	61	54	61	58	51	60	55	48
		10:12	39.8	Non-Exposed	65	65	65	65	65	65	65	65	65	65	65	65	65	65	65	65	65	65	65	65	65	65	65	65	65	65	65	65	65	65	65	65	65	64	64	64	63	63	63	62	62	62
				Exposed	65	65	65	65	65	65	65	65	65	65	65	65	65	65	65	65	65	65	65	65	65	65	65	65	65	65	65	65	65	62	65	65	58	64	61	54	63	58	51	62	55	48
		11:12	42.5	Non-Exposed	69	69	69	69	69	69	69	69	69	69	69	69	69	69	69	69	69	69	69	69	69	69	69	69	69	69	69	69	69	69	69	69	67	68	68	62	67	67	67	67	67	67
				Exposed	69	69	69	69	69	69	69	69	69	69	69	69	69	69	69	69	69	69	69	69	69	69	69	69	69	69	67	68	68	62	67	65	58	66	61	54	65	58	51	64	55	48
		12:12	45	Non-Exposed	73	73	73	73	73	73	73	73	73	73	73	73	73	73	73	73	73	73	73	73	73	73	73	73	72	72	72	71	71	71	70	70	70	68	68	67	67	67	63	66	66	59
				Exposed	73	73	73	73	73	73	73	73	73	73	73	73	73	73	73	73	73	73	73	73	73	73	73	73	72	72	67	71	70	62	70	65	58	68	61	54	67	58	51	66	55	48
	C	Flat	0	Non-Exposed	62	62	62	62	62	62	62	62	62	62	62	62	62	62	62	62	62	62	62	62	62	62	62	62	62	62	62	62	62	58	62	62	54	62	60	51	62	57	48	62	53	0
				Exposed	62	62	62	62	62	62	62	62	62	62	62	62	62	62	61	62	62	59	62	62	56	62	62	54	62	59	50	62	55	47	62	52	0	62	49	0	62	0	0	62	0	0
		1:12	4.8	Non-Exposed	58	58	58	58	58	58	58	58	58	58	58	58	58	58	58	58	58	58	58	58	58	58	58	58	58	58	58	58	58	57	58	58	54	58	58	51	58	56	48	58	53	0
				Exposed	58	58	58	58	58	58	58	58	58	58	58	58	58	58	58	58	58	58	58	58	56	58	58	54	58	58	50	58	55	47	58	52	0	58	49	0	58	0	0	58	0	0
		2:12	9.5	Non-Exposed	55	55	55	55	55	55	55	55	55	55	55	55	55	55	55	55	55	55	55	55	55	55	55	55	55	55	55	55	55	54	55	55	51	55	52	47	55	49	0	55	47	0
				Exposed	55	55	55	55	55	55	55	55	55	55	55	55	55	55	55	55	55	55	55	55	53	55	55	51	55	52	47	55	48	0	55	0	0	55	0	0	55	0	0	0	0	0
		3:12	14.0	Non-Exposed	52	52	52	52	52	52	52	52	52	52	52	52	52	52	52	52	52	52	52	52	52	52	52	52	52	52	52	52	52	52	52	52	50	52	52	47	52	49	0	52	46	0
				Exposed	52	52	52	52	52	52	52	52	52	52	52	52	52	52	52	52	52	52	52	52	51	52	52	47	52	48	0	52	0	0	52	0	0	52	0	0	52	0	0	0	0	0
		4:12	18.4	Non-Exposed	52	52	52	52	52	52	52	52	52	52	52	52	52	52	52	52	52	52	52	52	52	52	52	52	52	52	52	52	52	52	52	52	50	52	52	47	52	49	0	52	46	0
				Exposed	52	52	52	52	52	52	52	52	52	52	52	52	52	52	52	52	52	52	52	52	51	52	52	47	52	48	0	52	0	0	52	0	0	52	0	0	52	0	0	0	0	0
		5:12	22.6	Non-Exposed	54	54	54	54	54	54	54	54	54	54	54	54	54	54	54	54	54	54	54	54	54	54	54	54	54	54	54	54	54	54	54	54	54	54	54	51	54	54	48	54	51	45
				Exposed	54	54	54	54	54	54	54	54	54	54	54	54	54	54	54	54	54	54	54	54	54	54	54	51	54	53	47	54	49	43	54	46	0	54	0	0	54	0	0			
		6:12	26.6	Non-Exposed	55	55	55	55	55	55	55	55	55	55	55	55	55	55	55	55	55	55	55	55	55	55	55	55	55	55	55	55	55	55	55	55	55	55	55	51	55	54	48	55	51	45
				Exposed	55	55	55	55	55	55	55	55	55	55	55	55	55	55	55	55	55	55	55	55	55	55	55	50	55	53	47	55	49	0	55	46	0	55	0	0	55	0	0			
		7:12	30.3	Non-Exposed	57	57	57	57	57	57	57	57	57	57	57	57	57	57	57	57	57	57	57	57	57	57	57	57	57	57	57	57	57	57	56	56	56	55	55	55	54	54	53	53	53	50
				Exposed	57	57	57	57	57	57	57	57	57	57	57	57	57	57	57	57	57	57	57	57	57	57	57	56	57	57	52	56	55	48	55	52	45	54	49	0	53	46	0			
		8:12	33.7	Non-Exposed	60	60	60	60	60	60	60	60	60	60	60	60	60	60	60	60	60	60	60	60	60	60	60	60	60	60	60	59	59	59	58	58	58	57	57	56	56	56	53	55	55	50
				Exposed	60	60	60	60	60	60	60	60	60	60	60	60	60	60	60	60	60	60	60	60	60	60	60	56	59	59	52	58	55	48	57	52	45	56	49	0	55	0	0			
		9:12	36.9	Non-Exposed	62	62	62	62	62	62	62	62	62	62	62	62	62	62	62	62	62	62	62	62	62	62	62	62	62	62	62	61	61	61	60	60	60	59	59	56	57	57	53	56	56	50
				Exposed	62	62	62	62	62	62	62	62	62	62	62	62	62	62	62	62	62	62	62	62	62	62	62	60	62	62	56	61	59	52	60	55	48	59	52	45	57	49	0	56	0	0
		10:12	39.8	Non-Exposed	65	65	65	65	65	65	65	65	65	65	65	65	65	65	65	65	65	65	65	65	65	65	65	65	64	64	64	63	63	63	62	62	60	60	60	56	59	59	53	58	57	50
				Exposed	65	65	65	65	65	65	65	65	65	65	65	65	65	65	65	65	65	65	65	65	63	65	65	60	64	63	55	63	58	51	62	55	48	60	52	0	59	49	0	58	0	0
		11:12	42.5	Non-Exposed	69	69	69	69	69	69	69	69	69	69	69	69	69	69	69	69	69	69	69	69	69	68	68	68	66	66	66	65	65	64	64	64	60	62	62	56	61	60	53	59	56	50
				Exposed	69	69	69	69	69	69	69	69	69	69	69	69	69	69	69	69	69	69	69	69	63	68	68	60	66	63	55	65	58	51	64	55	48	62	52	0	61	49	0	60	0	0
		12:12	45	Non-Exposed	73	73	73	73	73	73	73	73	73	73	73	73	73	73	73	72	72	72	71	71	71	71	71	71	69	69	69	67	67	64	66	66	60	64	63	56	63	60	52	59	56	49
				Exposed	73	73	73	73	73	73	73	73	73	73	73	73	73	73	69	72	72	66	71	71	63	71	68	60	69	62	55	67	58	51	66	55	48	64	51	0	63	49	0	61	0	0
	D	Flat	0	Non-Exposed	62	62	62	62	62	62	62	62	62	62	62	62	62	62	62	62	62	62	62	62	62	62	62	61	62	62	57	62	62	53	62	59	49	62	55	46	61	52	0	57	49	0
				Exposed	62	62	62	62	62	62	62	62	62	62	62	59	62	62	56	62	62	54	62	61	52	62	59	50	62	55	0	62	51	0	62	47	0	62	0	0	62	0	0	62	0	0
		1:12	4.8	Non-Exposed	58	58	58	58	58	58	58	58	58	58	58	58	58	58	58	58	58	58	58	58	58	58	58	58	58	58	57	58	58	53	58	58	49	58	55	46	58	52	0	57	49	0
				Exposed	58	58	58	58	58	58	58	58	58	58	58	58	58	58	56	58	58	54	58	58	52	58	58	50	58	54	0	58	51	0	58	47	0	58	0	0	58	0	0	0	0	0
		2:12	9.5	Non-Exposed	55	55	55	55	55	55	55	55	55	55	55	55	55	55	55	55	55	55	55	55	55	55	55	55	55	55	53	55	54	50	55	51	46	55	48	0	55	0	0	53	0	0
				Exposed	55	55	55	55	55	55	55	55	55	55	55	55	55	55	53	55	55	51	55	53	48	55	51	47	55	47	0	55	0	0	55	0	0	55	0	0	0	0	0	0	0	0
		3:12	14.0	Non-Exposed	52	52	52	52	52	52	52	52	52	52	52	52	52	52	52	52	52	52	52	52	52	52	52	52	52	52	52	52	52	49	52	51	46	52	48	0	52	0	0	52	0	0
				Exposed	52	52	52	52	52	52	52	52	52	52	52	52	52	52	52	52	52	50	52	52	48	52	51	47	52	47	0	52	0	0	52	0	0	52	0	0	0	0	0	0	0	0
		4:12	18.4	Non-Exposed	52	52	52	52	52	52	52	52	52	52	52	52	52	52	52	52	52	52	52	52	52	52	52	52	52	52	52	52	52	49	52	51	46	52	48	0	52	0	0	52	0	0
				Exposed	52	52	52	52	52	52	52	52	52	52	52	52	52	52	52	52	52	50	52	52	48	52	51	46	52	47	0	52	0	0	52	0	0	0	0	0	0	0	0	0	0	0
		5:12	22.6	Non-Exposed	54	54	54	54	54	54	54	54	54	54	54	54	54	54	54	54	54	54	54	54	54	54	54	54	54	54	54	54	54	54	54	54	50	54	52	46	54	49	43	54	47	0
				Exposed	54	54	54	54	54	54	54	54	54	54	54	54	54	54	54	54	54	54	54	54	52	54	54	50	54	52	46	54	48	0	54	0	0	54	0	0	54	0	0	54	0	0
		6:12	26.6	Non-Exposed	55	55	55	55	55	55	55	55	55	55	55	55	55	55	55	55	55	55	55	55	55	55	55	55	55	55	55	55	55	53	55	55	50	55	52	46	55	49	0	55	47	0
				Exposed	55	55	55	55	55	55	55	55	55	55	55	55	55	55	55	55	55	55	55	55	52	55	55	50	55	52	46	55	48	0	55	0	0	55	0	0	55	0	0	55	0	0
		7:12	30.3	Non-Exposed	57	57	57	57	57	57	57	57	57	57	57	57	57	57	57	57	57	57	57	57	57	57	57	57	57	57	57	56	56	56	55	55	55	54	54	51	53	53	48	52	52	45
				Exposed	57	57	57	57	57	57	57	57	57	57	57	57	57	57	57	57	57	57	57	57	57	57	57	51	56	54	47	55	51	0	54	48	0	53	0	0	0	0	0	0	0	0
		8:12	33.7	Non-Exposed	60	60	60	60	60	60	60	60	60	60	60	60	60	60	60	60	60	60	60	60	60	60	60	60	59	59	59	58	58	58	56	56	55	55	55	51	54	54	48	53	52	45
				Exposed	60	60	60	60	60	60	60	60	60	60	60	60	60	60	60	60	60	60	60	60	57	60	60	55	59	58	51	58	54	47	56	50	0	55	47	0	54	0	0	0	0	0
		9:12	36.9	Non-Exposed	62	62	62	62	62	62	62	62	62	62	62	62	62	62	62	62	62	62	62	62	62	62	62	62	61	61	61	59	59	59	58	58	55	57	57	51	56	55	48	54	52	45
				Exposed	62	62	62	62	62	62	62	62	62	62	62	62	62	62	62	62	62	60	62	62	57	62	62	55	61	58	51	59	54	47	58	50	0	57	47	0	56	0	0	0	0	0
		10:12	39.8	Non-Exposed	65	65	65	65	65	65	65	65	65	65	65	65	65	65	65	65	65	65	65	65	65	64	64	64	63	63	63	61	61	59	60	60	55	59	58	51	57	55	48	55	52	45
				Exposed	65	65	65	65	65	65	65	65	65	65	65	65	65	65	63	65	65	60	65	65	57	64	62	55	63	58	51	61	54	47	60	50	0	59	47	0	57	0	0	0	0	0
		11:12	42.5	Non-Exposed	69	69	69	69	69	69	69	69	69	69	69	69	69	69	69	68	68	68	67	67	67	66	66	66	65	65	63	63	63	58	62	62	55	60	58	51	58	55	48	55	52	45
				Exposed	69	69	69	69	69	69	69	69	69	69	69	66	69	69	63	68	68	60	67	65	57	66	62	55	65	57	51	63	54	47	62	50	0	60	47	0	59	0	0	0	0	0
		12:12	45	Non-Exposed	73	73	73	73	73	73	73	73	73	72	72	72	71	71	71	70	70	70	70	70	70	69	69	69	67	67	63	65	65	58	64	62	54	61	58	51	58	55	48	55	52	45
				Exposed	73	73	73	73	73	73	73	73	70	72	72	66	71	71	63	70	68	60	70	64	57	69	62	55	67	57	50	65	54	47	64	50	0	62	47	0	60	0	0	0	0	0

Tamarack 2.3 Rail – Gable Flush-Mount on 30 Foot Maximum Mean Roof Height – Landscape – Panel Width = 45 Inches or Less

Ground Snow Load	Exposure Category	Roof Pitch	Roof Angle	Wind Speed (mph)	95			100			105			110			115			120			125			130			140			150			160			170			180			190		
				Roof Area	1	2	3	1	2	3	1	2	3	1	2	3	1	2	3	1	2	3	1	2	3	1	2	3	1	2	3	1	2	3	1	2	3	1	2	3	1	2	3	1	2	3
55	B	Flat	0	Non-Exposed	59	59	59	59	59	59	59	59	59	59	59	59	59	59	59	59	59	59	59	59	59	59	59	59	59	59	59	59	59	59	59	59	59	59	59	59	59	59	57	59	59	54
				Exposed	59	59	59	59	59	59	59	59	59	59	59	59	59	59	59	59	59	59	59	59	59	59	59	59	59	59	59	59	59	56	59	59	52	59	58	49	59	55	46	59	52	0
		1:12	4.8	Non-Exposed	55	55	55	55	55	55	55	55	55	55	55	55	55	55	55	55	55	55	55	55	55	55	55	55	55	55	55	55	55	55	55	55	55	55	55	55	55	55	55	55	55	54
				Exposed	55	55	55	55	55	55	55	55	55	55	55	55	55	55	55	55	55	55	55	55	55	55	55	55	55	55	55	55	55	55	55	55	52	55	55	49	55	55	0	55	52	0
		2:12	9.5	Non-Exposed	52	52	52	52	52	52	52	52	52	52	52	52	52	52	52	52	52	52	52	52	52	52	52	52	52	52	52	52	52	52	52	52	52	52	52	52	52	52	52	52	52	50
				Exposed	52	52	52	52	52	52	52	52	52	52	52	52	52	52	52	52	52	52	52	52	52	52	52	52	52	52	52	52	52	52	52	52	49	52	50	46	52	47	0	52	0	0
		3:12	14.0	Non-Exposed	50	50	50	50	50	50	50	50	50	50	50	50	50	50	50	50	50	50	50	50	50	50	50	50	50	50	50	50	50	50	50	50	50	50	50	50	50	50	50	50	50	50
				Exposed	50	50	50	50	50	50	50	50	50	50	50	50	50	50	50	50	50	50	50	50	50	50	50	50	50	50	50	50	50	50	50	50	49	50	50	46	50	47	0	50	0	0
		4:12	18.4	Non-Exposed	50	50	50	50	50	50	50	50	50	50	50	50	50	50	50	50	50	50	50	50	50	50	50	50	50	50	50	50	50	50	50	50	50	50	50	50	50	50	50	50	50	50
				Exposed	50	50	50	50	50	50	50	50	50	50	50	50	50	50	50	50	50	50	50	50	50	50	50	50	50	50	50	50	50	50	50	50	49	50	50	46	50	47	0	50	0	0
		5:12	22.6	Non-Exposed	51	51	51	51	51	51	51	51	51	51	51	51	51	51	51	51	51	51	51	51	51	51	51	51	51	51	51	51	51	51	51	51	51	51	51	51	51	51	51	51	51	51
				Exposed	51	51	51	51	51	51	51	51	51	51	51	51	51	51	51	51	51	51	51	51	51	51	51	51	51	51	51	51	51	51	51	51	49	51	51	46	51	49	0	51	0	0
		6:12	26.6	Non-Exposed	53	53	53	53	53	53	53	53	53	53	53	53	53	53	53	53	53	53	53	53	53	53	53	53	53	53	53	53	53	53	53	53	53	53	53	53	53	53	53	53	53	53
				Exposed	53	53	53	53	53	53	53	53	53	53	53	53	53	53	53	53	53	53	53	53	53	53	53	53	53	53	53	53	53	53	53	53	53	53	53	49	53	52	46	53	49	0
		7:12	30.3	Non-Exposed	55	55	55	55	55	55	55	55	55	55	55	55	55	55	55	55	55	55	55	55	55	55	55	55	55	55	55	55	55	55	55	55	55	55	55	55	55	55	55	54	54	54
				Exposed	55	55	55	55	55	55	55	55	55	55	55	55	55	55	55	55	55	55	55	55	55	55	55	55	55	55	55	55	55	55	55	55	54	55	55	51	54	54	48	54	54	48
		8:12	33.7	Non-Exposed	57	57	57	57	57	57	57	57	57	57	57	57	57	57	57	57	57	57	57	57	57	57	57	57	57	57	57	57	57	57	57	57	57	57	57	57	57	57	57	57	57	57
				Exposed	57	57	57	57	57	57	57	57	57	57	57	57	57	57	57	57	57	57	57	57	57	57	57	57	57	57	57	57	57	57	57	57	54	57	57	54	57	57	51	56	55	48
		9:12	36.9	Non-Exposed	60	60	60	60	60	60	60	60	60	60	60	60	60	60	60	60	60	60	60	60	60	60	60	60	60	60	60	60	60	60	60	60	60	60	60	60	59	59	59	58	58	58
				Exposed	60	60	60	60	60	60	60	60	60	60	60	60	60	60	60	60	60	60	60	60	60	60	60	60	60	60	60	60	60	60	60	60	58	60	60	54	59	58	51	58	55	48
		10:12	39.8	Non-Exposed	63	63	63	63	63	63	63	63	63	63	63	63	63	63	63	63	63	63	63	63	63	63	63	63	63	63	63	63	63	63	63	63	62	62	62	62	61	61	61	60	60	60
				Exposed	63	63	63	63	63	63	63	63	63	63	63	63	63	63	63	63	63	63	63	63	63	63	63	63	63	63	63	63	63	62	63	63	58	62	61	54	61	58	51	60	55	48
		11:12	42.5	Non-Exposed	66	66	66	66	66	66	66	66	66	66	66	66	66	66	66	66	66	66	66	66	66	66	66	66	66	66	66	66	66	66	65	65	65	64	64	64	63	63	63	62	62	60
				Exposed	66	66	66	66	66	66	66	66	66	66	66	66	66	66	66	66	66	66	66	66	66	66	66	66	66	66	66	66	66	62	65	65	58	64	61	54	63	58	51	62	55	48
		12:12	45	Non-Exposed	70	70	70	70	70	70	70	70	70	70	70	70	70	70	70	70	70	70	70	70	70	70	70	70	70	70	70	69	69	69	68	68	68	66	66	66	65	65	63	64	64	59
				Exposed	70	70	70	70	70	70	70	70	70	70	70	70	70	70	70	70	70	70	70	70	70	70	70	70	70	70	67	69	69	62	68	65	58	66	61	54	65	58	51	64	55	48
	C	Flat	0	Non-Exposed	59	59	59	59	59	59	59	59	59	59	59	59	59	59	59	59	59	59	59	59	59	59	59	59	59	59	59	59	59	58	59	59	54	59	59	51	59	57	48	59	53	0
				Exposed	59	59	59	59	59	59	59	59	59	59	59	59	59	59	59	59	59	59	59	59	56	59	59	54	59	59	50	59	55	47	59	52	0	59	49	0	59	0	0	59	0	0
		1:12	4.8	Non-Exposed	55	55	55	55	55	55	55	55	55	55	55	55	55	55	55	55	55	55	55	55	55	55	55	55	55	55	55	55	55	55	55	55	54	55	55	51	55	55	48	55	53	0
				Exposed	55	55	55	55	55	55	55	55	55	55	55	55	55	55	55	55	55	55	55	55	54	55	55	50	55	55	47	55	52	0	55	49	0	55	0	0	55	0	0	55	0	0
		2:12	9.5	Non-Exposed	52	52	52	52	52	52	52	52	52	52	52	52	52	52	52	52	52	52	52	52	52	52	52	52	52	52	52	52	52	52	52	52	51	52	52	47	52	49	0	52	47	0
				Exposed	52	52	52	52	52	52	52	52	52	52	52	52	52	52	52	52	52	52	52	52	52	52	52	51	52	52	47	52	48	0	52	0	0	52	0	0	52	0	0	0	0	0
		3:12	14.0	Non-Exposed	50	50	50	50	50	50	50	50	50	50	50	50	50	50	50	50	50	50	50	50	50	50	50	50	50	50	50	50	50	50	50	50	50	50	50	47	50	49	0	50	46	0
				Exposed	50	50	50	50	50	50	50	50	50	50	50	50	50	50	50	50	50	50	50	50	50	50	50	47	50	48	0	50	0	0	50	0	0	50	0	0	50	0	0	0	0	0
		4:12	18.4	Non-Exposed	50	50	50	50	50	50	50	50	50	50	50	50	50	50	50	50	50	50	50	50	50	50	50	50	50	50	50	50	50	50	50	50	50	50	50	47	50	49	0	50	46	0
				Exposed	50	50	50	50	50	50	50	50	50	50	50	50	50	50	50	50	50	50	50	50	50	50	50	47	50	48	0	50	0	0	50	0	0	50	0	0	50	0	0	0	0	0
		5:12	22.6	Non-Exposed	51	51	51	51	51	51	51	51	51	51	51	51	51	51	51	51	51	51	51	51	51	51	51	51	51	51	51	51	51	51	51	51	48	51	51	45	51	51	48	51	51	45
				Exposed	51	51	51	51	51	51	51	51	51	51	51	51	51	51	51	51	51	51	51	51	51	51	51	51	51	51	47	51	49	43	51	46	0	51	0	0	51	0	0	51	0	0
		6:12	26.6	Non-Exposed	53	53	53	53	53	53	53	53	53	53	53	53	53	53	53	53	53	53	53	53	53	53	53	53	53	53	53	53	53	53	53	53	53	53	53	51	53	53	48	53	51	45
				Exposed	53	53	53	53	53	53	53	53	53	53	53	53	53	53	53	53	53	53	53	53	53	53	53	50	53	53	47	53	49	0	53	46	0	53	0	0	53	0	0	53	0	0
		7:12	30.3	Non-Exposed	55	55	55	55	55	55	55	55	55	55	55	55	55	55	55	55	55	55	55	55	55	55	55	55	55	55	55	55	55	55	54	54	54	54	54	54	53	53	53	52	52	50
				Exposed	55	55	55	55	55	55	55	55	55	55	55	55	55	55	55	55	55	55	55	55	55	55	55	55	55	55	52	54	54	48	54	52	45	53	49	0	52	46	0	52	0	0
		8:12	33.7	Non-Exposed	57	57	57	57	57	57	57	57	57	57	57	57	57	57	57	57	57	57	57	57	57	57	57	57	57	57	57	56	56	56	55	55	55	54	54	53	53	53	50	53	50	0
				Exposed	57	57	57	57	57	57	57	57	57	57	57	57	57	57	57	57	57	57	57	57	57	57	57	56	57	57	52	56	55	48	55	52	45	54	49	0	53	0	0	53	0	0
		9:12	36.9	Non-Exposed	60	60	60	60	60	60	60	60	60	60	60	60	60	60	60	60	60	60	60	60	60	60	60	60	60	60	60	59	59	59	58	58	58	57	57	56	56	56	53	55	55	50
				Exposed	60	60	60	60	60	60	60	60	60	60	60	60	60	60	60	60	60	60	60	60	60	60	60	56	59	59	52	58	55	48	57	52	45	56	49	0	55	0	0	55	0	0
		10:12	39.8	Non-Exposed	63	63	63	63	63	63	63	63	63	63	63	63	63	63	63	63	63	63	63	63	63	63	63	63	62	62	62	61	61	61	60	60	60	59	59	56	58	58	53	57	57	50
				Exposed	63	63	63	63	63	63	63	63	63	63	63	63	63	63	63	63	63	63	63	63	63	63	63	60	62	62	55	61	58	51	60	55	48	59	52	0	58	49	0	57	0	0
		11:12	42.5	Non-Exposed	66	66	66	66	66	66	66	66	66	66	66	66	66	66	66	66	66	66	66	66	66	66	66	66	64	64	64	63	63	63	62	62	60	61	61	56	59	59	53	58	56	50
				Exposed	66	66	66	66	66	66	66	66	66	66	66	66	66	66	66	66	66	66	66	66	63	66	66	60	64	63	55	63	58	51	62	55	48	61	52	0	59	49	0	58	0	0
		12:12	45	Non-Exposed	70	70	70	70	70	70	70	70	70	70	70	70	70	70	70	70	70	70	69	69	69	68	68	68	67	67	67	66	66	64	64	64	60	63	63	56	61	60	52	59	56	49
				Exposed	70	70	70	70	70	70	70	70	70	70	70	70	70	70	69	70	70	66	69	69	63	68	68	60	67	62	55	66	58	51	64	55	48	63	51	0	61	49	0	60	0	0
	D	Flat	0	Non-Exposed	59	59	59	59	59	59	59	59	59	59	59	59	59	59	59	59	59	59	59	59	59	59	59	59	59	59	57	59	59	53	59	59	49	59	55	46	59	52	0	57	49	0
				Exposed	59	59	59	59	59	59	59	59	59	59	59	59	59	59	56	59	59	54	59	59	52	59	59	50	59	55	0	59	51	0	59	47	0	59	0	0	59	0	0	59	0	0
		1:12	4.8	Non-Exposed	55	55	55	55	55	55	55	55	55	55	55	55	55	55	55	55	55	55	55	55	55	55	55	55	55	55	55	55	55	53	55	55	49	55	55	46	55	52	0	55	49	0
				Exposed	55	55	55	55	55	55	55	55	55	55	55	55	55	55	55	55	55	54	55	55	52	55	55	50	55	54	0	55	51	0	55	47	0	55	0	0	55	0	0	0	0	0
		2:12	9.5	Non-Exposed	52	52	52	52	52	52	52	52	52	52	52	52	52	52	52	52	52	52	52	52	52	52	52	52	52	52	52	52	52	50	52	51	46	52	48	0	52	0	0	52	0	0
				Exposed	52	52	52	52	52	52	52	52	52	52	52	52	52	52	52	52	52	51	52	52	48	52	51	47	52	47	0	52	0	0	52	0	0	52	0	0	0	0	0	0	0	0
		3:12	14.0	Non-Exposed	50	50	50	50	50	50	50	50	50	50	50	50	50	50	50	50	50	50	50	50	50	50	50	50	50	50	50	50	50	49	50	50	46	50	48	0	50	0	0	50	0	0
				Exposed	50	50	50	50	50	50	50	50	50	50	50	50	50	50	50	50	50	50	50	50	48	50	50	47	50	47	0	50	0	0	50	0	0	50	0	0	0	0	0	0	0	0
		4:12	18.4	Non-Exposed	50	50	50	50	50	50	50	50	50	50	50	50	50	50	50	50	50	50	50	50	50	50	50	50	50	50	50	50	50	49	50	50	46	50	48	0	50	0	0	50	0	0
				Exposed	50	50	50	50	50	50	50	50	50	50	50	50	50	50	50	50	50	50	50	50	48	50	50	46	50	47	0	50	0	0	50	0	0	0	0	0	0	0	0	0	0	0
		5:12	22.6	Non-Exposed	51	51	51	51	51	51	51	51	51	51	51	51	51	51	51	51	51	51	51	51	51	51	51	51	51	51	51	51	51	50	51	51	46	51	49	43	51	47	0	51	47	0
				Exposed	51	51	51	51	51	51	51	51	51	51	51	51	51	51	51	51	51	51	51	51	51	51	51	50	51	51	46	51	48	0	51	0	0	51	0	0	51	0	0	51	0	0
		6:12	26.6	Non-Exposed	53	53	53	53	53	53	53	53	53	53	53	53	53	53	53	53	53	53	53	53	53	53	53	53	53	53	53	53	53	50	53	52	46	53	49	0	53	47	0	53	47	0
				Exposed	53	53	53	53	53	53	53	53	53	53	53	53	53	53	53	53	53	53	53	53	52	53	53	50	53	52	46	53	48	0	53	0	0	53	0	0	53	0	0	53	0	0
		7:12	30.3	Non-Exposed	55	55	55	55	55	55	55	55	55	55	55	55	55	55	55	55	55	55	55	55	55	55	55	55	55	55	55	54	54	54	53	53	53	52	52	51	51	51	48	50	50	45
				Exposed	55	55	55	55	55	55	55	55	55	55	55	55	55	55	55	55	55	55	55	55	55	55	55	51	54	54	47	53	51	0	52	48	0	51	0	0	0	0	0	0	0	0
		8:12	33.7	Non-Exposed	57	57	57	57	57	57	57	57	57	57	57	57	57	57	57	57	57	57	57	57	57	57	57	57	57	57	57	56	56	56	55	55	55	54	54	51	53	53	48	52	52	45
				Exposed	57	57	57	57	57	57	57	57	57	57	57	57	57	57	57	57	57	57	57	57	57	57	57	51	56	54	47	55	50	0	54	47	0	53	0	0	0	0	0	0	0	0
		9:12	36.9	Non-Exposed	60	60	60	60	60	60	60	60	60	60	60	60	60	60	60	60	60	60	60	60	60	60	60	60	59	59	59	58	58	58	57	57	55	55	55	51	54	54	48	53	52	45
				Exposed	60	60	60	60	60	60	60	60	60	60	60	60	60	60	60	60	60	60	60	60	57	60	60	55	59	58	51	58	54	47	57	50	0	55	47	0	54	0	0	0	0	0
		10:12	39.8	Non-Exposed	63	63	63	63	63	63	63	63	63	63	63	63	63	63	63	63	63	63	63	63	63	62	62	62	61	61	61	60	60	59	58	58	55	57	57	51	56	55	48	55	52	45
				Exposed	63	63	63	63	63	63	63	63	63	63	63	63	63	63	63	63	63	60	63	63	57	62	62	55	61	58	51	60	54	47	58	50	0	57	47	0	56	0	0	0	0	0
		11:12	42.5	Non-Exposed	66	66	66	66	66	66	66	66	66	66	66	66	66	66	66	66	66	65	65	65	64	64	64	63	63	63	62	62	62	58	60	60	55	59	58	51	58	55	48	55	52	45
				Exposed	66	66	66	66	66	66	66	66	66	66	66	66	66	66	63	66	66	60	65	65	57	64	62	55	63	57	51	62	54	47	60	50	0	59	47	0	58	0	0	0	0	0
		12:12	45	Non-Exposed	70	70	70	70	70	70	70	70	70	70	70	70	69	69	69	68	68	68	68	68	68	67	67	67	65	65	63	64	64	58	62	62	54	61	58	51	58	55	48	55	52	45
				Exposed	70	70	70	70	70	70	70	70	70	70	70	66	69	69	63	68	68	60	68	64	57	67	62	55	65	57	50	64	54	47	62	50	0	61	47	0	59	0	0	0	0	0

Tamarack 2.3 Rail – Gable Flush-Mount on 30 Foot Maximum Mean Roof Height – Landscape – Panel Width = 45 Inches or Less

Ground Snow Load	Exposure Category	Roof Pitch	Roof Angle	Wind Speed (mph)	95			100			105			110			115			120			125			130			140			150			160			170			180			190		
				Roof Area	1	2	3	1	2	3	1	2	3	1	2	3	1	2	3	1	2	3	1	2	3	1	2	3	1	2	3	1	2	3	1	2	3	1	2	3	1	2	3	1	2	3
60	B	Flat	0	Non-Exposed	57	57	57	57	57	57	57	57	57	57	57	57	57	57	57	57	57	57	57	57	57	57	57	57	57	57	57	57	57	57	57	57	57	57	57	57	57	57	57	57	57	54
				Exposed	57	57	57	57	57	57	57	57	57	57	57	57	57	57	57	57	57	57	57	57	57	57	57	57	57	57	57	57	57	56	57	57	52	57	57	49	57	55	46	57	52	0
		1:12	4.8	Non-Exposed	53	53	53	53	53	53	53	53	53	53	53	53	53	53	53	53	53	53	53	53	53	53	53	53	53	53	53	53	53	53	53	53	53	53	53	53	53	53	53	53	53	53
				Exposed	53	53	53	53	53	53	53	53	53	53	53	53	53	53	53	53	53	53	53	53	53	53	53	53	53	53	53	53	53	53	53	53	52	53	53	49	53	53	0	53	52	0
		2:12	9.5	Non-Exposed	50	50	50	50	50	50	50	50	50	50	50	50	50	50	50	50	50	50	50	50	50	50	50	50	50	50	50	50	50	50	50	50	50	50	50	50	50	50	50	50	50	50
				Exposed	50	50	50	50	50	50	50	50	50	50	50	50	50	50	50	50	50	50	50	50	50	50	50	50	50	50	50	50	50	50	50	50	49	50	50	46	50	47	0	50	0	0
		3:12	14.0	Non-Exposed	48	50	48	48	50	48	48	50	48	48	50	48	48	50	48	48	50	48	48	50	48	48	50	48	48	50	48	48	50	48	48	50	48	48	50	48	48	50	48	48	50	48
				Exposed	48	50	48	48	50	48	48	50	48	48	50	48	48	50	48	48	50	48	48	50	48	48	50	48	48	50	48	48	50	48	48	50	48	48	50	46	48	47	0	48	0	0
		4:12	18.4	Non-Exposed	48	50	48	48	50	48	48	50	48	48	50	48	48	50	48	48	50	48	48	50	48	48	50	48	48	50	48	48	50	48	48	50	48	48	50	48	48	50	48	48	50	48
				Exposed	48	50	48	48	50	48	48	50	48	48	50	48	48	50	48	48	50	48	48	50	48	48	50	48	48	50	48	48	50	48	48	50	48	48	50	46	48	47	0	48	0	0
		5:12	22.6	Non-Exposed	49	50	49	49	50	49	49	50	49	49	50	49	49	50	49	49	50	49	49	50	49	49	50	49	49	50	49	49	50	49	49	50	49	49	50	49	49	50	49	49	50	49
				Exposed	49	50	49	49	50	49	49	50	49	49	50	49	49	50	49	49	50	49	49	50	49	49	50	49	49	50	49	49	50	49	49	50	49	49	50	46	49	46	0	49	0	0
		6:12	26.6	Non-Exposed	51	51	51	51	51	51	51	51	51	51	51	51	51	51	51	51	51	51	51	51	51	51	51	51	51	51	51	51	51	51	51	51	51	51	51	51	51	51	48	51	51	45
				Exposed	51	51	51	51	51	51	51	51	51	51	51	51	51	51	51	51	51	51	51	51	51	51	51	51	51	51	50	51	51	47	51	49	0	51	46	0	51	0	0	51	0	0
		7:12	30.3	Non-Exposed	52	52	52	52	52	52	52	52	52	52	52	52	52	52	52	52	52	52	52	52	52	52	52	52	52	52	52	52	52	52	52	52	52	52	52	52	51	51	51	50	50	50
				Exposed	52	52	52	52	52	52	52	52	52	52	52	52	52	52	52	52	52	52	52	52	52	52	52	52	52	52	52	52	52	52	52	52	48	52	52	45	51	49	0	50	46	0
		8:12	33.7	Non-Exposed	55	55	55	55	55	55	55	55	55	55	55	55	55	55	55	55	55	55	55	55	55	55	55	55	55	55	55	55	55	55	55	55	55	54	54	54	53	53	53	52	52	50
				Exposed	55	55	55	55	55	55	55	55	55	55	55	55	55	55	55	55	55	55	55	55	55	55	55	55	55	55	55	55	55	52	55	55	48	54	52	45	53	49	0	52	0	0
		9:12	36.9	Non-Exposed	57	57	57	57	57	57	57	57	57	57	57	57	57	57	57	57	57	57	57	57	57	57	57	57	57	57	57	57	57	57	56	56	56	55	55	55	54	54	53	53	53	50
				Exposed	57	57	57	57	57	57	57	57	57	57	57	57	57	57	57	57	57	57	57	57	57	57	57	57	57	57	56	57	57	52	56	55	48	55	52	45	54	49	0	53	0	0
		10:12	39.8	Non-Exposed	60	60	60	60	60	60	60	60	60	60	60	60	60	60	60	60	60	60	60	60	60	60	60	60	60	60	60	59	59	59	58	58	58	57	57	56	56	56	53	55	55	50
				Exposed	60	60	60	60	60	60	60	60	60	60	60	60	60	60	60	60	60	60	60	60	60	60	60	60	60	60	55	59	58	51	58	55	48	57	52	0	56	49	0	55	0	0
		11:12	42.5	Non-Exposed	64	64	64	64	64	64	64	64	64	64	64	64	64	64	64	64	64	64	64	64	64	64	64	64	63	63	63	62	62	62	60	60	60	59	59	56	58	58	53	57	56	50
				Exposed	64	64	64	64	64	64	64	64	64	64	64	64	64	64	64	64	64	64	64	64	63	64	64	60	63	63	55	62	58	51	60	55	48	59	52	0	58	49	0	57	0	0
		12:12	45	Non-Exposed	67	67	67	67	67	67	67	67	67	67	67	67	67	67	67	67	67	67	67	67	67	66	66	66	65	65	65	64	64	64	63	63	60	61	61	56	60	60	52	59	56	49
				Exposed	67	67	67	67	67	67	67	67	67	67	67	67	67	67	67	67	67	67	67	67	67	66	66	60	65	62	55	64	58	51	63	55	48	61	51	0	60	49	0	59	0	0
	C	Flat	0	Non-Exposed	57	57	57	57	57	57	57	57	57	57	57	57	57	57	57	57	57	57	57	57	57	57	57	57	57	57	57	57	57	57	57	57	54	57	57	51	57	57	48	57	53	0
				Exposed	57	57	57	57	57	57	57	57	57	57	57	57	57	57	57	57	57	57	57	57	56	57	57	54	57	57	50	57	55	47	57	52	0	57	49	0	57	0	0	57	0	0
		1:12	4.8	Non-Exposed	53	53	53	53	53	53	53	53	53	53	53	53	53	53	53	53	53	53	53	53	53	53	53	53	53	53	53	53	53	53	53	53	53	53	53	51	53	53	48	53	53	0
				Exposed	53	53	53	53	53	53	53	53	53	53	53	53	53	53	53	53	53	53	53	53	53	53	53	53	53	53	50	53	53	47	53	52	0	53	49	0	53	0	0	53	0	0
		2:12	9.5	Non-Exposed	50	50	50	50	50	50	50	50	50	50	50	50	50	50	50	50	50	50	50	50	50	50	50	50	50	50	50	50	50	50	50	50	50	50	50	47	50	49	0	50	47	0
				Exposed	50	50	50	50	50	50	50	50	50	50	50	50	50	50	50	50	50	50	50	50	50	50	50	50	50	50	47	50	48	0	50	0	0	50	0	0	50	0	0	0	0	0
		3:12	14.0	Non-Exposed	48	50	48	48	50	48	48	50	48	48	50	48	48	50	48	48	50	48	48	50	48	48	50	48	48	50	48	48	50	48	48	50	48	48	50	47	48	49	0	48	46	0
				Exposed	48	50	48	48	50	48	48	50	48	48	50	48	48	50	48	48	50	48	48	50	48	48	50	48	48	50	47	48	48	0	48	0	0	48	0	0	48	0	0	0	0	0
		4:12	18.4	Non-Exposed	48	50	48	48	50	48	48	50	48	48	50	48	48	50	48	48	50	48	48	50	48	48	50	48	48	50	48	48	50	48	48	50	48	48	50	47	48	49	0	48	46	0
				Exposed	48	50	48	48	50	48	48	50	48	48	50	48	48	50	48	48	50	48	48	50	48	48	50	48	48	50	47	48	48	0	48	0	0	48	0	0	48	0	0	0	0	0
		5:12	22.6	Non-Exposed	49	50	49	49	50	49	49	50	49	49	50	49	49	50	49	49	50	49	49	50	49	49	50	49	49	50	49	49	50	49	49	50	49	49	50	49	49	50	48	49	50	45
				Exposed	49	50	49	49	50	49	49	50	49	49	50	49	49	50	49	49	50	49	49	50	49	49	50	49	49	50	49	49	50	47	49	49	43	49	46	0	49	0	0	49	0	0
		6:12	26.6	Non-Exposed	51	51	51	51	51	51	51	51	51	51	51	51	51	51	51	51	51	51	51	51	51	51	51	51	51	51	51	51	51	51	51	51	51	51	51	51	51	51	48	51	51	45
				Exposed	51	51	51	51	51	51	51	51	51	51	51	51	51	51	51	51	51	51	51	51	51	51	51	51	51	51	50	51	51	47	51	49	0	51	46	0	51	0	0	51	0	0
		7:12	30.3	Non-Exposed	52	52	52	52	52	52	52	52	52	52	52	52	52	52	52	52	52	52	52	52	52	52	52	52	52	52	52	52	52	52	52	52	52	52	52	52	51	51	51	50	50	50
				Exposed	52	52	52	52	52	52	52	52	52	52	52	52	52	52	52	52	52	52	52	52	52	52	52	52	52	52	52	52	52	52	52	52	48	52	52	45	51	49	0	50	46	0
		8:12	33.7	Non-Exposed	55	55	55	55	55	55	55	55	55	55	55	55	55	55	55	55	55	55	55	55	55	55	55	55	55	55	55	55	55	55	55	55	55	54	54	54	53	53	53	52	52	50
				Exposed	55	55	55	55	55	55	55	55	55	55	55	55	55	55	55	55	55	55	55	55	55	55	55	55	55	55	55	55	55	52	55	55	48	54	52	45	53	49	0	52	0	0
		9:12	36.9	Non-Exposed	57	57	57	57	57	57	57	57	57	57	57	57	57	57	57	57	57	57	57	57	57	57	57	57	57	57	57	57	57	57	56	56	56	55	55	55	54	54	53	53	53	50
				Exposed	57	57	57	57	57	57	57	57	57	57	57	57	57	57	57	57	57	57	57	57	57	57	57	57	57	57	56	57	57	52	56	55	48	55	52	45	54	49	0	53	0	0
		10:12	39.8	Non-Exposed	60	60	60	60	60	60	60	60	60	60	60	60	60	60	60	60	60	60	60	60	60	60	60	60	60	60	60	59	59	59	58	58	58	57	57	56	56	56	53	55	55	50
				Exposed	60	60	60	60	60	60	60	60	60	60	60	60	60	60	60	60	60	60	60	60	60	60	60	60	60	60	55	59	58	51	58	55	48	57	52	0	56	49	0	55	0	0
		11:12	42.5	Non-Exposed	64	64	64	64	64	64	64	64	64	64	64	64	64	64	64	64	64	64	64	64	64	64	64	64	63	63	63	62	62	62	60	60	60	59	59	56	58	58	53	57	56	50
				Exposed	64	64	64	64	64	64	64	64	64	64	64	64	64	64	64	64	64	64	64	64	63	64	64	60	63	63	55	62	58	51	60	55	48	59	52	0	58	49	0	57	0	0
		12:12	45	Non-Exposed	67	67	67	67	67	67	67	67	67	67	67	67	67	67	67	67	67	67	67	67	67	66	66	66	65	65	65	64	64	64	63	63	60	61	61	56	60	60	52	59	56	49
				Exposed	67	67	67	67	67	67	67	67	67	67	67	67	67	67	67	67	67	67	67	67	63	66	66	60	65	62	55	64	58	51	63	55	48	61	51	0	60	49	0	59	0	0
	D	Flat	0	Non-Exposed	57	57	57	57	57	57	57	57	57	57	57	57	57	57	57	57	57	57	57	57	57	57	57	57	57	57	57	57	57	53	57	57	49	57	55	46	57	52	0	57	49	0
				Exposed	57	57	57	57	57	57	57	57	57	57	57	57	57	56	57	57	54	57	57	52	57	57	50	57	55	0	57	51	0	57	47	0	57	0	0	57	0	0	57	0	0
		1:12	4.8	Non-Exposed	53	53	53	53	53	53	53	53	53	53	53	53	53	53	53	53	53	53	53	53	53	53	53	53	53	53	53	53	53	53	53	53	49	53	53	46	53	52	0	53	49	0
				Exposed	53	53	53	53	53	53	53	53	53	53	53	53	53	53	53	53	53	53	53	52	53	53	50	53	53	0	53	51	0	53	47	0	53	0	0	53	0	0	0	0	0
		2:12	9.5	Non-Exposed	50	50	50	50	50	50	50	50	50	50	50	50	50	50	50	50	50	50	50	50	50	50	50	50	50	50	50	50	50	50	50	50	46	50	48	0	50	0	0	50	0	0
				Exposed	50	50	50	50	50	50	50	50	50	50	50	50	50	50	50	50	50	50	50	48	50	50	47	50	47	0	50	0	0	50	0	0	50	0	0	0	0	0	0	0	0
		3:12	14.0	Non-Exposed	48	50	48	48	50	48	48	50	48	48	50	48	48	50	48	48	50	48	48	50	48	48	50	48	48	50	48	48	50	48	48	50	46	48	48	0	48	0	0	48	0	0
				Exposed	48	50	48	48	50	48	48	50	48	48	50	48	48	50	48	48	50	48	48	50	48	48	50	47	48	47	0	48	0	0	48	0	0	48	0	0	0	0	0	0	0	0
		4:12	18.4	Non-Exposed	48	50	48	48	50	48	48	50	48	48	50	48	48	50	48	48	50	48	48	50	48	48	50	48	48	50	48	48	50	48	48	50	46	48	48	0	48	0	0	48	0	0
				Exposed	48	50	48	48	50	48	48	50	48	48	50	48	48	50	48	48	50	48	48	50	46	48	47	0	48	0	0	48	0	0	0	0	0	0	0	0	0	0	0	0	0
		5:12	22.6	Non-Exposed	49	50	49	49	50	49	49	50	49	49	50	49	49	50	49	49	50	49	49	50	49	49	50	49	49	50	49	49	50	49	49	50	49	49	50	46	49	49	43	49	47	0
				Exposed	49	50	49	49	50	49	49	50	49	49	50	49	49	50	49	49	50	49	49	50	49	49	50	49	49	50	46	49	48	0	49	0	0	49	0	0	49	0	0	49	0	0
		6:12	26.6	Non-Exposed	51	51	51	51	51	51	51	51	51	51	51	51	51	51	51	51	51	51	51	51	51	51	51	51	51	51	51	51	51	51	51	51	50	51	51	46	51	49	0	51	47	0
				Exposed	51	51	51	51	51	51	51	51	51	51	51	51	51	51	51	51	51	51	51	51	51	51	50	51	51	46	51	48	0	51	0	0	51	0	0	51	0	0	51	0	0
		7:12	30.3	Non-Exposed	52	52	52	52	52	52	52	52	52	52	52	52	52	52	52	52	52	52	52	52	52	52	52	52	52	52	52	52	52	52	52	52	52	51	51	51	50	50	48	49	49	45
				Exposed	52	52	52	52	52	52	52	52	52	52	52	52	52	52	52	52	52	52	52	52	52	52	51	52	52	47	52	51	0	51	48	0	50	0	0	0	0	0	0	0	0
		8:12	33.7	Non-Exposed	55	55	55	55	55	55	55	55	55	55	55	55	55	55	55	55	55	55	55	55	55	55	55	55	55	55	55	54	54	54	53	53	53	52	52	51	51	51	48	50	50	45
				Exposed	55	55	55	55	55	55	55	55	55	55	55	55	55	55	55	55	55	55	55	55	55	55	51	54	54	47	53	50	0	52	47	0	51	0	0	0	0	0	0	0	0
		9:12	36.9	Non-Exposed	57	57	57	57	57	57	57	57	57	57	57	57	57	57	57	57	57	57	57	57	57	57	57	57	57	57	57	56	56	56	55	55	55	54	54	51	53	53	48	52	52	45
				Exposed	57	57	57	57	57	57	57	57	57	57	57	57	57	57	57	57	57	57	57	57	57	57	51	56	54	47	55	50	0	54	47	0	53	0	0	0	0	0	0	0	0
		10:12	39.8	Non-Exposed	60	60	60	60	60	60	60	60	60	60	60	60	60	60	60	60	60	60	60	60	60	60	60	60	59	59	59	58	58	58	57	57	55	56	56	51	55	55	48	53	52	45
				Exposed	60	60	60	60	60	60	60	60	60	60	60	60	60	60	60	60	60	60	60	57	60	60	55	59	58	51	58	54	47	57	50	0	56	47	0	55	0	0	0	0	0
		11:12	42.5	Non-Exposed	64	64	64	64	64	64	64	64	64	64	64	64	64	64	64	64	64	63	63	63	63	63	63	61	61	61	60	60	58	59	59	55	58	58	51	56	55	48	55	52	45
				Exposed	64	64	64	64	64	64	64	64	64	64	64	64	64	63	64	64	60	63	63	57	63	62	55	61	57	51	60	54	47	59	50	0	58	47	0	56	0	0	0	0	0
		12:12	45	Non-Exposed	67	67	67	67	67	67	67	67	67	67	67	67	67	67	67	66	66	66	66	66	66	65	65	65	64	64	63	62	62	58	61	61	54	59	58	51	58	55	48	55	52	45
				Exposed	67	67	67	67	67	67	67	67	67	67	67	66	67	67	63	66	66	60	66	64	57	65	62	55	64	57	50	62	54	47	61	50	0	59	47	0	58	0	0	0	0	0

Tamarack 2.3 Rail – Gable Flush-Mount on 30 Foot Maximum Mean Roof Height – Landscape – Panel Width = 45 Inches or Less

Ground Snow Load	Exposure Category	Roof Pitch	Roof Angle	Wind Speed (mph)	95			100			105			110			115			120			125			130			140			150			160			170			180			190		
				Roof Area	1	2	3	1	2	3	1	2	3	1	2	3	1	2	3	1	2	3	1	2	3	1	2	3	1	2	3	1	2	3	1	2	3	1	2	3	1	2	3	1	2	3
70	B	Flat	0	Non-Exposed	52	52	52	52	52	52	52	52	52	52	52	52	52	52	52	52	52	52	52	52	52	52	52	52	52	52	52	52	52	52	52	52	52	52	52	52	52	52	52	52	52	52
				Exposed	52	52	52	52	52	52	52	52	52	52	52	52	52	52	52	52	52	52	52	52	52	52	52	52	52	52	52	52	52	52	52	52	52	52	52	49	52	52	46	52	52	0
		1:12	4.8	Non-Exposed	49	50	49	49	50	49	49	50	49	49	50	49	49	50	49	49	50	49	49	50	49	49	50	49	49	50	49	49	50	49	49	50	49	49	50	49	49	50	49	49	50	49
				Exposed	49	50	49	49	50	49	49	50	49	49	50	49	49	50	49	49	50	49	49	50	49	49	50	49	49	50	49	49	50	49	49	50	49	49	50	49	49	50	0	49	50	0
		2:12	9.5	Non-Exposed	46	50	46	46	50	46	46	50	46	46	50	46	46	50	46	46	50	46	46	50	46	46	50	46	46	50	46	46	50	46	46	50	46	46	50	46	46	50	46	46	50	46
				Exposed	46	50	46	46	50	46	46	50	46	46	50	46	46	50	46	46	50	46	46	50	46	46	50	46	46	50	46	46	50	46	46	50	46	46	50	46	46	47	0	46	0	0
		3:12	14.0	Non-Exposed	44	49	44	44	49	44	44	49	44	44	49	44	44	49	44	44	49	44	44	49	44	44	49	44	44	49	44	44	49	44	44	49	44	44	49	44	44	49	44	44	48	44
				Exposed	44	49	44	44	49	44	44	49	44	44	49	44	44	49	44	44	49	44	44	49	44	44	49	44	44	49	44	44	49	44	44	49	44	44	49	44	44	47	0	44	0	0
		4:12	18.4	Non-Exposed	45	49	45	45	49	45	45	49	45	45	49	45	45	49	45	45	49	45	45	49	45	45	49	45	45	49	45	45	49	45	45	49	45	45	49	45	45	49	45	45	46	45
				Exposed	45	49	45	45	49	45	45	49	45	45	49	45	45	49	45	45	49	45	45	49	45	45	49	45	45	49	45	45	49	45	45	49	45	45	49	45	45	47	0	45	0	0
		5:12	22.6	Non-Exposed	46	50	46	46	50	46	46	50	46	46	50	46	46	50	46	46	50	46	46	50	46	46	50	46	46	50	46	46	50	46	46	50	46	46	50	46	46	50	46	46	50	46
				Exposed	46	50	46	46	50	46	46	50	46	46	50	46	46	50	46	46	50	46	46	50	46	46	50	46	46	50	46	46	50	46	46	50	46	46	50	46	46	50	46	46	50	46
		6:12	26.6	Non-Exposed	47	50	47	47	50	47	47	50	47	47	50	47	47	50	47	47	50	47	47	50	47	47	50	47	47	50	47	47	50	47	47	50	47	47	50	47	47	50	47	47	50	47
				Exposed	47	50	47	47	50	47	47	50	47	47	50	47	47	50	47	47	50	47	47	50	47	47	50	47	47	50	47	47	50	47	47	50	47	47	50	47	47	50	47	47	50	47
		7:12	30.3	Non-Exposed	49	50	49	49	50	49	49	50	49	49	50	49	49	50	49	49	50	49	49	50	49	49	50	49	49	50	49	49	50	49	49	50	49	49	50	49	49	50	49	49	50	49
				Exposed	49	50	49	49	50	49	49	50	49	49	50	49	49	50	49	49	50	49	49	50	49	49	50	49	49	50	49	49	50	49	49	50	48	49	49	45	49	49	0	48	46	0
		8:12	33.7	Non-Exposed	51	51	51	51	51	51	51	51	51	51	51	51	51	51	51	51	51	51	51	51	51	51	51	51	51	51	51	51	51	51	51	51	51	51	51	51	50	50	50	49	49	49
				Exposed	51	51	51	51	51	51	51	51	51	51	51	51	51	51	51	51	51	51	51	51	51	51	51	51	51	51	51	51	51	51	51	51	48	51	51	45	50	49	0	49	0	0
		9:12	36.9	Non-Exposed	53	53	53	53	53	53	53	53	53	53	53	53	53	53	53	53	53	53	53	53	53	53	53	53	53	53	53	53	53	53	53	53	53	53	53	53	52	52	52	51	51	50
				Exposed	53	53	53	53	53	53	53	53	53	53	53	53	53	53	53	53	53	53	53	53	53	53	53	53	53	53	53	53	53	52	53	53	48	53	52	45	52	49	0	51	0	0
		10:12	39.8	Non-Exposed	56	56	56	56	56	56	56	56	56	56	56	56	56	56	56	56	56	56	56	56	56	56	56	56	56	56	56	56	56	56	56	56	55	55	55	55	54	54	53	53	53	50
				Exposed	56	56	56	56	56	56	56	56	56	56	56	56	56	56	56	56	56	56	56	56	56	56	56	56	56	56	55	56	56	51	56	55	48	55	52	0	54	49	0	53	0	0
		11:12	42.5	Non-Exposed	59	59	59	59	59	59	59	59	59	59	59	59	59	59	59	59	59	59	59	59	59	59	59	59	59	59	59	59	59	59	58	58	58	57	57	56	56	56	53	55	55	50
				Exposed	59	59	59	59	59	59	59	59	59	59	59	59	59	59	59	59	59	59	59	59	59	59	59	59	59	59	55	59	58	51	58	55	48	57	52	0	56	49	0	55	0	0
		12:12	45	Non-Exposed	63	63	63	63	63	63	63	63	63	63	63	63	63	63	63	63	63	63	63	63	63	63	63	63	62	62	62	61	61	61	60	60	60	59	59	56	58	58	52	56	56	49
				Exposed	63	63	63	63	63	63	63	63	63	63	63	63	63	63	63	63	63	63	63	63	63	63	63	60	62	62	55	61	58	51	60	55	48	59	51	0	58	49	0	56	0	0
	C	Flat	0	Non-Exposed	52	52	52	52	52	52	52	52	52	52	52	52	52	52	52	52	52	52	52	52	52	52	52	52	52	52	52	52	52	52	52	52	52	52	52	51	52	52	48	52	52	0
				Exposed	52	52	52	52	52	52	52	52	52	52	52	52	52	52	52	52	52	52	52	52	52	52	52	52	52	52	50	52	52	47	52	52	0	52	49	0	52	0	0	52	0	0
		1:12	4.8	Non-Exposed	49	50	49	49	50	49	49	50	49	49	50	49	49	50	49	49	50	49	49	50	49	49	50	49	49	50	49	49	50	49	49	50	49	49	50	49	49	50	48	49	50	0
				Exposed	49	50	49	49	50	49	49	50	49	49	50	49	49	50	49	49	50	49	49	50	49	49	50	49	49	50	49	49	50	47	49	50	0	49	49	0	49	0	0	49	0	0
		2:12	9.5	Non-Exposed	46	50	46	46	50	46	46	50	46	46	50	46	46	50	46	46	50	46	46	50	46	46	50	46	46	50	46	46	50	46	46	50	46	46	50	46	46	49	0	46	47	0
				Exposed	46	50	46	46	50	46	46	50	46	46	50	46	46	50	46	46	50	46	46	50	46	46	50	46	46	50	46	46	48	0	46	0	0	46	0	0	46	0	0	0	0	0
		3:12	14.0	Non-Exposed	44	49	44	44	49	44	44	49	44	44	49	44	44	49	44	44	49	44	44	49	44	44	49	44	44	49	44	44	49	44	44	48	44	44	48	44	44	48	0	44	46	0
				Exposed	44	49	44	44	49	44	44	49	44	44	49	44	44	49	44	44	49	44	44	49	44	44	49	44	44	49	44	44	48	0	44	0	0	44	0	0	44	0	0	0	0	0
		4:12	18.4	Non-Exposed	45	49	45	45	49	45	45	49	45	45	49	45	45	49	45	45	49	45	45	49	45	45	49	45	45	49	45	45	49	45	45	48	45	45	48	45	45	48	0	45	46	0
				Exposed	45	49	45	45	49	45	45	49	45	45	49	45	45	49	45	45	49	45	45	49	45	45	49	45	45	49	45	45	48	0	45	0	0	45	0	0	45	0	0	0	0	0
		5:12	22.6	Non-Exposed	46	50	46	46	50	46	46	50	46	46	50	46	46	50	46	46	50	46	46	50	46	46	50	46	46	50	46	46	50	46	46	49	46	46	49	46	46	48	46	46	48	45
				Exposed	46	50	46	46	50	46	46	50	46	46	50	46	46	50	46	46	50	46	46	50	46	46	50	46	46	50	46	46	50	46	46	49	43	46	46	0	46	0	0	46	0	0
		6:12	26.6	Non-Exposed	47	50	47	47	50	47	47	50	47	47	50	47	47	50	47	47	50	47	47	50	47	47	50	47	47	50	47	47	50	47	47	50	47	47	50	47	47	49	45	47	49	45
				Exposed	47	50	47	47	50	47	47	50	47	47	50	47	47	50	47	47	50	47	47	50	47	47	50	47	47	50	47	47	50	47	47	49	0	47	46	0	47	0	0	47	0	0
		7:12	30.3	Non-Exposed	49	50	49	49	50	49	49	50	49	49	50	49	49	50	49	49	50	49	49	50	49	49	50	49	49	50	49	49	50	49	49	50	49	49	50	49	49	49	48	48	48	48
				Exposed	49	50	49	49	50	49	49	50	49	49	50	49	49	50	49	49	50	49	49	50	49	49	50	49	49	50	49	49	50	48	49	49	45	49	49	0	48	46	0	48	46	0
		8:12	33.7	Non-Exposed	51	51	51	51	51	51	51	51	51	51	51	51	51	51	51	51	51	51	51	51	51	51	51	51	51	51	51	51	51	51	51	51	51	51	51	50	50	50	49	49	49	49
				Exposed	51	51	51	51	51	51	51	51	51	51	51	51	51	51	51	51	51	51	51	51	51	51	51	51	51	51	51	51	51	51	51	51	48	51	51	45	50	49	0	49	0	0
		9:12	36.9	Non-Exposed	53	53	53	53	53	53	53	53	53	53	53	53	53	53	53	53	53	53	53	53	53	53	53	53	53	53	53	53	53	53	53	53	53	53	53	53	52	52	52	51	51	50
				Exposed	53	53	53	53	53	53	53	53	53	53	53	53	53	53	53	53	53	53	53	53	53	53	53	53	53	53	53	53	53	52	53	53	48	53	52	45	52	49	0	51	0	0
		10:12	39.8	Non-Exposed	56	56	56	56	56	56	56	56	56	56	56	56	56	56	56	56	56	56	56	56	56	56	56	56	56	56	56	56	56	56	56	56	55	55	55	55	54	54	53	53	53	50
				Exposed	56	56	56	56	56	56	56	56	56	56	56	56	56	56	56	56	56	56	56	56	56	56	56	56	56	56	55	56	56	51	56	55	48	55	52	0	54	49	0	53	0	0
		11:12	42.5	Non-Exposed	59	59	59	59	59	59	59	59	59	59	59	59	59	59	59	59	59	59	59	59	59	59	59	59	59	59	59	59	59	59	58	58	58	57	57	56	56	56	53	55	55	50
				Exposed	59	59	59	59	59	59	59	59	59	59	59	59	59	59	59	59	59	59	59	59	59	59	59	59	59	59	55	59	58	51	58	55	48	57	52	0	56	49	0	55	0	0
		12:12	45	Non-Exposed	63	63	63	63	63	63	63	63	63	63	63	63	63	63	63	63	63	63	63	63	63	63	63	63	62	62	62	61	61	61	60	60	60	59	59	56	58	58	52	56	56	49
				Exposed	63	63	63	63	63	63	63	63	63	63	63	63	63	63	63	63	63	63	63	63	63	63	63	60	62	62	55	61	58	51	60	55	48	59	51	0	58	49	0	56	0	0
	D	Flat	0	Non-Exposed	52	52	52	52	52	52	52	52	52	52	52	52	52	52	52	52	52	52	52	52	52	52	52	52	52	52	52	52	52	52	52	52	49	52	52	46	52	52	0	52	49	0
				Exposed	52	52	52	52	52	52	52	52	52	52	52	52	52	52	52	52	52	52	52	52	52	52	52	50	52	52	0	52	51	0	52	47	0	52	0	0	52	0	0	52	0	0
		1:12	4.8	Non-Exposed	49	50	49	49	50	49	49	50	49	49	50	49	49	50	49	49	50	49	49	50	49	49	50	49	49	50	49	49	50	49	49	50	49	49	50	46	49	50	0	49	49	0
				Exposed	49	50	49	49	50	49	49	50	49	49	50	49	49	50	49	49	50	49	49	50	49	49	50	49	49	50	0	49	50	0	49	47	0	49	0	0	49	0	0	0	0	0
		2:12	9.5	Non-Exposed	46	50	46	46	50	46	46	50	46	46	50	46	46	50	46	46	50	46	46	50	46	46	50	46	46	50	46	46	50	46	46	49	46	46	48	0	46	0	0	46	0	0
				Exposed	46	50	46	46	50	46	46	50	46	46	50	46	46	50	46	46	50	46	46	50	46	46	50	46	46	47	0	46	0	0	46	0	0	46	0	0	0	0	0	0	0	0
		3:12	14.0	Non-Exposed	44	49	44	44	49	44	44	49	44	44	49	44	44	49	44	44	49	44	44	49	44	44	49	44	44	49	44	44	48	44	44	48	44	44	47	0	44	0	0	44	0	0
				Exposed	44	49	44	44	49	44	44	49	44	44	49	44	44	49	44	44	49	44	44	49	44	44	49	44	44	47	0	44	0	0	44	0	0	44	0	0	0	0	0	0	0	0
		4:12	18.4	Non-Exposed	45	49	45	45	49	45	45	49	45	45	49	45	45	49	45	45	49	45	45	49	45	45	49	45	45	49	45	45	48	45	45	48	45	45	47	0	45	0	0	45	0	0
				Exposed	45	49	45	45	49	45	45	49	45	45	49	45	45	49	45	45	49	45	45	49	45	45	49	45	45	47	0	45	0	0	45	0	0	0	0	0	0	0	0	0	0	0
		5:12	22.6	Non-Exposed	46	50	46	46	50	46	46	50	46	46	50	46	46	50	46	46	50	46	46	50	46	46	50	46	46	50	46	46	49	46	46	49	46	46	48	46	46	48	43	46	47	0
				Exposed	46	50	46	46	50	46	46	50	46	46	50	46	46	50	46	46	50	46	46	50	46	46	50	46	46	50	46	46	48	0	46	0	0	46	0	0	46	0	0	46	0	0
		6:12	26.6	Non-Exposed	47	50	47	47	50	47	47	50	47	47	50	47	47	50	47	47	50	47	47	50	47	47	50	47	47	50	47	47	50	47	47	50	47	47	49	46	47	49	0	47	47	0
				Exposed	47	50	47	47	50	47	47	50	47	47	50	47	47	50	47	47	50	47	47	50	47	47	50	47	47	50	46	47	48	0	47	0	0	47	0	0	47	0	0	47	0	0
		7:12	30.3	Non-Exposed	49	50	49	49	50	49	49	50	49	49	50	49	49	50	49	49	50	49	49	50	49	49	50	49	49	50	49	49	50	49	49	49	49	48	48	48	48	48	48	47	47	45
				Exposed	49	50	49	49	50	49	49	50	49	49	50	49	49	50	49	49	50	49	49	50	49	49	50	49	49	50	49	49	50	47	49	49	0	48	48	0	48	0	0	0	0	0
		8:12	33.7	Non-Exposed	51	51	51	51	51	51	51	51	51	51	51	51	51	51	51	51	51	51	51	51	51	51	51	51	51	51	51	51	51	51	51	51	51	50	50	50	49	49	48	48	48	45
				Exposed	51	51	51	51	51	51	51	51	51	51	51	51	51	51	51	51	51	51	51	51	51	51	51	51	51	51	51	51	51	47	51	50	0	50	47	0	49	0	0	0	0	0
		9:12	36.9	Non-Exposed	53	53	53	53	53	53	53	53	53	53	53	53	53	53	53	53	53	53	53	53	53	53	53	53	53	53	53	53	53	53	52	52	52	51	51	51	51	51	48	50	50	45
				Exposed	53	53	53	53	53	53	53	53	53	53	53	53	53	53	53	53	53	53	53	53	53	53	53	51	53	53	47	52	50	0	51	47	0	51	47	0	51	0	0	0	0	0
		10:12	39.8	Non-Exposed	56	56	56	56	56	56	56	56	56	56	56	56	56	56	56	56	56	56	56	56	56	56	56	56	56	56	55	55	55	54	54	54	53	53	51	52	52	48	51	51	45
				Exposed	56	56	56	56	56	56	56	56	56	56	56	56	56	56	56	56	56	56	56	56	56	56	56	55	56	56	51	55	54	47	54	50	0	53	47	0	52	0	0	0	0	0
		11:12	42.5	Non-Exposed	59	59	59	59	59	59	59	59	59	59	59	59	59	59	59	59	59	59	59	59	59	59	59	59	58	58	58	57	57	57	56	56	55	55	55	51	54	54	48	53	52	45
				Exposed	59	59	59	59	59	59	59	59	59	59	59	59	59	59	59	59	59	59	59	59	57	59	59	55	58	57	51	57	54	47	56	50	0	55	47	0	54	0	0	0	0	0
		12:12	45	Non-Exposed	63	63	63	63	63	63	63	63	63	63	63	63	63	63	63	63	63	63	62	62	62	62	62	62	61	61	61	59	59	58	58	58	54	57	57	51	56	55	48	55	52	45
				Exposed	63	63	63	63	63	63	63	63	63	63	63	63	63	63	63	63	63	60	62	62	57	62	62	55	61	57	50	59	54	47	58	50	0	57	47	0	56	0	0	0	0	0

Tamarack 2.3 Rail – Gable Flush-Mount on 30 Foot Maximum Mean Roof Height – Landscape – Panel Width = 45 Inches or Less

Ground Snow Load	Exposure Category	Roof Pitch	Roof Angle	Wind Speed (mph)	95			100			105			110			115			120			125			130			140			150			160			170			180			190		
				Roof Area	1	2	3	1	2	3	1	2	3	1	2	3	1	2	3	1	2	3	1	2	3	1	2	3	1	2	3	1	2	3	1	2	3	1	2	3	1	2	3	1	2	3
80	B	Flat	0	Non-Exposed	49	50	49	49	50	49	49	50	49	49	50	49	49	50	49	49	50	49	49	50	49	49	50	49	49	50	49	49	50	49	49	50	49	49	50	49	49	50	49	49	50	49
				Exposed	49	50	49	49	50	49	49	50	49	49	50	49	49	50	49	49	50	49	49	50	49	49	50	49	49	50	49	49	50	49	49	50	49	49	50	49	49	50	46	49	50	0
		1:12	4.8	Non-Exposed	46	50	46	46	50	46	46	50	46	46	50	46	46	50	46	46	50	46	46	50	46	46	50	46	46	50	46	46	50	46	46	50	46	46	50	46	46	50	46	46	50	46
				Exposed	46	50	46	46	50	46	46	50	46	46	50	46	46	50	46	46	50	46	46	50	46	46	50	46	46	50	46	46	50	46	46	50	46	46	50	46	46	50	0	46	50	0
		2:12	9.5	Non-Exposed	43	48	43	43	48	43	43	48	43	43	48	43	43	48	43	43	48	43	43	48	43	43	48	43	43	48	43	43	48	43	43	48	43	43	48	43	43	48	43	43	47	43
				Exposed	43	48	43	43	48	43	43	48	43	43	48	43	43	48	43	43	48	43	43	48	43	43	48	43	43	48	43	43	48	43	43	48	43	43	48	43	43	47	0	43	0	0
		3:12	14.0	Non-Exposed	42	46	42	42	46	42	42	46	42	42	46	42	42	46	42	42	46	42	42	46	42	42	46	42	42	46	42	42	46	42	42	46	42	42	46	42	42	46	42	42	46	42
				Exposed	42	46	42	42	46	42	42	46	42	42	46	42	42	46	42	42	46	42	42	46	42	42	46	42	42	46	42	42	46	42	42	46	42	42	46	42	42	46	0	42	0	0
		4:12	18.4	Non-Exposed	42	46	42	42	46	42	42	46	42	42	46	42	42	46	42	42	46	42	42	46	42	42	46	42	42	46	42	42	46	42	42	46	42	42	46	42	42	46	42	42	46	42
				Exposed	42	46	42	42	46	42	42	46	42	42	46	42	42	46	42	42	46	42	42	46	42	42	46	42	42	46	42	42	46	42	42	46	42	42	46	42	42	46	0	42	0	0
		5:12	22.6	Non-Exposed	43	47	43	43	47	43	43	47	43	43	47	43	43	47	43	43	47	43	43	47	43	43	47	43	43	47	43	43	47	43	43	47	43	43	47	43	43	47	43	43	47	43
				Exposed	43	47	43	43	47	43	43	47	43	43	47	43	43	47	43	43	47	43	43	47	43	43	47	43	43	47	43	43	47	43	43	47	43	43	47	43	43	47	0	43	0	0
		6:12	26.6	Non-Exposed	44	48	44	44	48	44	44	48	44	44	48	44	44	48	44	44	48	44	44	48	44	44	48	44	44	48	44	44	48	44	44	48	44	44	48	44	44	48	44	44	48	44
				Exposed	44	48	44	44	48	44	44	48	44	44	48	44	44	48	44	44	48	44	44	48	44	44	48	44	44	48	44	44	48	44	44	48	0	44	46	0	44	0	0	44	0	0
		7:12	30.3	Non-Exposed	46	50	46	46	50	46	46	50	46	46	50	46	46	50	46	46	50	46	46	49	46	46	49	46	46	49	46	46	48	46	46	48	46	46	47	46	46	46	46	46	46	46
				Exposed	46	50	46	46	50	46	46	50	46	46	50	46	46	50	46	46	50	46	46	49	46	46	49	46	46	49	46	46	48	46	46	48	46	46	47	45	46	46	0	46	46	0
		8:12	33.7	Non-Exposed	48	50	48	48	50	48	48	50	48	48	50	48	48	50	48	48	50	48	48	50	48	48	50	48	48	50	48	48	50	48	48	49	48	48	49	48	48	48	48	47	47	47
				Exposed	48	50	48	48	50	48	48	50	48	48	50	48	48	50	48	48	50	48	48	50	48	48	50	48	48	50	48	48	50	48	48	49	48	48	49	45	48	48	0	47	0	0
		9:12	36.9	Non-Exposed	50	50	50	50	50	50	50	50	50	50	50	50	50	50	50	50	50	50	50	50	50	50	50	50	50	50	50	50	50	50	50	50	50	50	50	50	50	49	49	49	49	49
				Exposed	50	50	50	50	50	50	50	50	50	50	50	50	50	50	50	50	50	50	50	50	50	50	50	50	50	50	50	50	50	50	50	50	48	50	50	45	50	49	0	49	0	0
		10:12	39.8	Non-Exposed	53	53	53	53	53	53	53	53	53	53	53	53	53	53	53	53	53	53	53	53	53	53	53	53	53	53	53	53	53	53	53	53	52	52	52	52	51	51	51	51	51	50
				Exposed	53	53	53	53	53	53	53	53	53	53	53	53	53	53	53	53	53	53	53	53	53	53	53	53	53	53	53	53	53	51	53	53	48	52	52	0	51	49	0	51	0	0
		11:12	42.5	Non-Exposed	56	56	56	56	56	56	56	56	56	56	56	56	56	56	56	56	56	56	56	56	56	56	56	56	56	56	56	56	56	56	55	55	55	54	54	54	53	53	53	52	52	50
				Exposed	56	56	56	56	56	56	56	56	56	56	56	56	56	56	56	56	56	56	56	56	56	56	56	56	56	56	55	56	56	51	55	55	48	54	52	0	53	49	0	52	0	0
		12:12	45	Non-Exposed	59	59	59	59	59	59	59	59	59	59	59	59	59	59	59	59	59	59	59	59	59	59	59	59	59	59	59	58	58	58	57	57	57	56	56	56	55	55	52	54	54	49
				Exposed	59	59	59	59	59	59	59	59	59	59	59	59	59	59	59	59	59	59	59	59	59	59	59	59	59	62	55	58	58	51	57	55	48	56	51	0	55	49	0	54	0	0
	C	Flat	0	Non-Exposed	49	50	49	49	50	49	49	50	49	49	50	49	49	50	49	49	50	49	49	50	49	49	50	49	49	50	49	49	50	49	49	50	49	49	50	49	49	50	48	49	50	0
				Exposed	49	50	49	49	50	49	49	50	49	49	50	49	49	50	49	49	50	49	49	50	49	49	50	49	49	50	49	49	50	47	49	50	0	49	49	0	49	0	0	49	0	0
		1:12	4.8	Non-Exposed	46	50	46	46	50	46	46	50	46	46	50	46	46	50	46	46	50	46	46	50	46	46	50	46	46	50	46	46	50	46	46	50	46	46	50	46	46	50	46	46	50	0
				Exposed	46	50	46	46	50	46	46	50	46	46	50	46	46	50	46	46	50	46	46	50	46	46	50	46	46	50	46	46	50	0	46	49	0	46	0	0	46	0	0	46	0	0
		2:12	9.5	Non-Exposed	43	48	43	43	48	43	43	48	43	43	48	43	43	48	43	43	48	43	43	48	43	43	48	43	43	48	43	43	48	43	43	47	43	43	47	43	43	47	0	43	46	0
				Exposed	43	48	43	43	48	43	43	48	43	43	48	43	43	48	43	43	48	43	43	48	43	43	48	43	43	48	43	43	48	0	43	0	0	43	0	0	43	0	0	0	0	0
		3:12	14.0	Non-Exposed	42	46	42	42	46	42	42	46	42	42	46	42	42	46	42	42	46	42	42	46	42	42	46	42	42	46	42	42	46	42	42	46	42	42	45	42	42	45	0	42	45	0
				Exposed	42	46	42	42	46	42	42	46	42	42	46	42	42	46	42	42	46	42	42	46	42	42	46	42	42	46	42	42	46	0	42	0	0	42	0	0	42	0	0	0	0	0
		4:12	18.4	Non-Exposed	42	46	42	42	46	42	42	46	42	42	46	42	42	46	42	42	46	42	42	46	42	42	46	42	42	46	42	42	46	42	42	46	42	42	45	42	42	45	0	42	45	0
				Exposed	42	46	42	42	46	42	42	46	42	42	46	42	42	46	42	42	46	42	42	46	42	42	46	42	42	46	42	42	46	0	42	0	0	42	0	0	42	0	0	0	0	0
		5:12	22.6	Non-Exposed	43	47	43	43	47	43	43	47	43	43	47	43	43	47	43	43	47	43	43	47	43	43	47	43	43	47	43	43	47	43	43	47	43	43	46	43	43	46	43	43	45	43
				Exposed	43	47	43	43	47	43	43	47	43	43	47	43	43	47	43	43	47	43	43	47	43	43	47	43	43	47	43	43	47	43	43	47	43	43	46	0	43	0	0	43	0	0
		6:12	26.6	Non-Exposed	44	48	44	44	48	44	44	48	44	44	48	44	44	48	44	44	48	44	44	48	44	44	48	44	44	48	44	44	48	44	44	48	44	44	47	44	44	47	44	44	47	44
				Exposed	44	48	44	44	48	44	44	48	44	44	48	44	44	48	44	44	48	44	44	48	44	44	48	44	44	48	44	44	48	44	44	48	0	44	46	0	44	0	0	44	0	0
		7:12	30.3	Non-Exposed	46	50	46	46	50	46	46	50	46	46	50	46	46	50	46	46	50	46	46	49	46	46	49	46	46	49	46	46	48	46	46	48	46	46	47	46	46	46	46	46	46	46
				Exposed	46	50	46	46	50	46	46	50	46	46	50	46	46	50	46	46	50	46	46	49	46	46	49	46	46	49	46	46	48	46	46	48	46	46	47	45	46	46	0	46	46	0
		8:12	33.7	Non-Exposed	48	50	48	48	50	48	48	50	48	48	50	48	48	50	48	48	50	48	48	50	48	48	50	48	48	50	48	48	50	48	48	49	48	48	49	48	48	48	48	47	47	47
				Exposed	48	50	48	48	50	48	48	50	48	48	50	48	48	50	48	48	50	48	48	50	48	48	50	48	48	50	48	48	50	48	48	49	48	48	49	45	48	48	0	47	0	0
		9:12	36.9	Non-Exposed	50	50	50	50	50	50	50	50	50	50	50	50	50	50	50	50	50	50	50	50	50	50	50	50	50	50	50	50	50	50	50	50	50	50	50	50	50	49	49	49	49	49
				Exposed	50	50	50	50	50	50	50	50	50	50	50	50	50	50	50	50	50	50	50	50	50	50	50	50	50	50	50	50	50	50	50	50	48	50	50	45	50	49	0	49	0	0
		10:12	39.8	Non-Exposed	53	53	53	53	53	53	53	53	53	53	53	53	53	53	53	53	53	53	53	53	53	53	53	53	53	53	53	53	53	53	53	53	52	52	52	52	51	51	51	51	51	50
				Exposed	53	53	53	53	53	53	53	53	53	53	53	53	53	53	53	53	53	53	53	53	53	53	53	53	53	53	53	53	53	51	53	53	48	52	52	0	51	49	0	51	0	0
		11:12	42.5	Non-Exposed	56	56	56	56	56	56	56	56	56	56	56	56	56	56	56	56	56	56	56	56	56	56	56	56	56	56	56	56	56	56	55	55	55	54	54	54	53	53	53	52	52	50
				Exposed	56	56	56	56	56	56	56	56	56	56	56	56	56	56	56	56	56	56	56	56	56	56	56	56	56	56	55	56	56	51	55	55	48	54	52	0	53	49	0	52	0	0
		12:12	45	Non-Exposed	59	59	59	59	59	59	59	59	59	59	59	59	59	59	59	59	59	59	59	59	59	59	59	59	59	59	59	58	58	58	57	57	57	56	56	56	55	55	52	54	54	49
				Exposed	59	59	59	59	59	59	59	59	59	59	59	59	59	59	59	59	59	59	59	59	59	59	59	59	59	62	55	58	58	51	57	55	48	56	51	0	55	49	0	54	0	0
	D	Flat	0	Non-Exposed	49	50	49	49	50	49	49	50	49	49	50	49	49	50	49	49	50	49	49	50	49	49	50	49	49	50	49	49	50	49	49	50	49	49	50	46	49	50	0	49	49	0
				Exposed	49	50	49	49	50	49	49	50	49	49	50	49	49	50	49	49	50	49	49	50	49	49	50	49	49	50	0	49	50	0	49	47	0	49	0	0	49	0	0	49	0	0
		1:12	4.8	Non-Exposed	46	50	46	46	50	46	46	50	46	46	50	46	46	50	46	46	50	46	46	50	46	46	50	46	46	50	46	46	50	46	46	50	46	46	50	46	46	50	0	46	49	0
				Exposed	46	50	46	46	50	46	46	50	46	46	50	46	46	50	46	46	50	46	46	50	46	46	50	46	46	50	0	46	50	0	46	47	0	46	0	0	46	0	0	0	0	0
		2:12	9.5	Non-Exposed	43	48	43	43	48	43	43	48	43	43	48	43	43	48	43	43	48	43	43	48	43	43	48	43	43	48	43	43	47	43	43	47	43	43	46	0	43	0	0	43	0	0
				Exposed	43	48	43	43	48	43	43	48	43	43	48	43	43	48	43	43	48	43	43	48	43	43	48	43	43	47	0	43	0	0	43	0	0	43	0	0	0	0	0	0	0	0
		3:12	14.0	Non-Exposed	42	46	42	42	46	42	42	46	42	42	46	42	42	46	42	42	46	42	42	46	42	42	46	42	42	46	42	42	46	42	42	45	42	42	45	0	42	0	0	42	0	0
				Exposed	42	46	42	42	46	42	42	46	42	42	46	42	42	46	42	42	46	42	42	46	42	42	46	42	42	46	0	42	0	0	42	0	0	0	0	0	0	0	0	0	0	0
		4:12	18.4	Non-Exposed	42	46	42	42	46	42	42	46	42	42	46	42	42	46	42	42	46	42	42	46	42	42	46	42	42	46	42	42	45	42	42	45	42	42	45	0	42	0	0	42	0	0
				Exposed	42	46	42	42	46	42	42	46	42	42	46	42	42	46	42	42	46	42	42	46	42	42	46	42	42	46	0	42	0	0	42	0	0	0	0	0	0	0	0	0	0	0
		5:12	22.6	Non-Exposed	43	47	43	43	47	43	43	47	43	43	47	43	43	47	43	43	47	43	43	47	43	43	47	43	43	47	43	43	46	43	43	46	43	43	46	43	43	45	0	43	45	0
				Exposed	43	47	43	43	47	43	43	47	43	43	47	43	43	47	43	43	47	43	43	47	43	43	47	43	43	47	43	43	46	0	43	0	0	43	0	0	43	0	0	43	0	0
		6:12	26.6	Non-Exposed	44	48	44	44	48	44	44	48	44	44	48	44	44	48	44	44	48	44	44	48	44	44	48	44	44	48	44	44	48	44	44	47	44	44	47	44	44	46	0	44	46	0
				Exposed	44	48	44	44	48	44	44	48	44	44	48	44	44	48	44	44	48	44	44	48	44	44	48	44	44	48	44	44	48	0	44	0	0	44	0	0	44	0	0	44	0	0
		7:12	30.3	Non-Exposed	46	50	46	46	50	46	46	50	46	46	49	46	46	49	46	46	49	46	46	49	46	46	48	46	46	47	46	46	47	46	46	47	46	46	46	46	45	45	45	45	45	45
				Exposed	46	50	46	46	50	46	46	50	46	46	49	46	46	49	46	46	49	46	46	49	46	46	48	46	46	47	46	46	47	0	46	46	0	45	0	0	0	0	0	0	0	0
		8:12	33.7	Non-Exposed	48	50	48	48	50	48	48	50	48	48	50	48	48	50	48	48	50	48	48	50	48	48	50	48	48	50	48	48	49	48	48	48	48	48	48	48	47	47	47	46	46	45
				Exposed	48	50	48	48	50	48	48	50	48	48	50	48	48	50	48	48	50	48	48	50	48	48	50	48	48	50	48	48	49	47	48	48	0	48	47	0	47	0	0	0	0	0
		9:12	36.9	Non-Exposed	50	50	50	50	50	50	50	50	50	50	50	50	50	50	50	50	50	50	50	50	50	50	50	50	50	50	50	50	50	50	50	50	50	49	49	49	48	48	48	48	48	45
				Exposed	50	50	50	50	50	50	50	50	50	50	50	50	50	50	50	50	50	50	50	50	50	50	50	50	50	50	50	50	50	47	50	50	0	49	47	0	48	0	0	0	0	0
		10:12	39.8	Non-Exposed	53	53	53	53	53	53	53	53	53	53	53	53	53	53	53	53	53	53	53	53	53	53	53	53	53	53	53	53	53	53	52	52	52	51	51	51	50	50	48	49	49	45
				Exposed	53	53	53	53	53	53	53	53	53	53	53	53	53	53	53	53	53	53	53	53	53	53	53	53	53	53	51	53	53	47	52	50	0	51	47	0	50	0	0	0	0	0
		11:12	42.5	Non-Exposed	56	56	56	56	56	56	56	56	56	56	56	56	56	56	56	56	56	56	56	56	56	56	56	56	56	56	55	55	55	54	54	54	53	53	51	52	52	48	51	51	45
				Exposed	56	56	56	56	56	56	56	56	56	56	56	56	56	56	56	56	56	56	56	56	56	56	56	56	56	51	55	54	47	54	50	0	53	47	0	52	0	0	0	0	0
		12:12	45	Non-Exposed	59	59	59	59	59	59	59	59	59	59	59	59	59	59	59	59	59	59	59	59	59	59	58	58	58	57	57	57	56	56	54	55	55	51	54	54	48	53	52	45
				Exposed	59	59	59	59	59	59	59	59	59	59	59	59	59	59	59	59	59	59	59	59	57	59	59	55	58	57	50	57	54	47	56	50	0	55	47	0	54	0	0	0	0	0

Tamarack 2.3 Rail – Gable Flush-Mount on 30 Foot Maximum Mean Roof Height – Landscape – Panel Width = 45 Inches or Less

Ground Snow Load	Exposure Category	Roof Pitch	Roof Angle	Wind Speed (mph)	95			100			105			110			115			120			125			130			140			150			160			170			180			190		
				Roof Area	1	2	3	1	2	3	1	2	3	1	2	3	1	2	3	1	2	3	1	2	3	1	2	3	1	2	3	1	2	3	1	2	3	1	2	3	1	2	3	1	2	3
90	B	Flat	0	Non-Exposed	46	50	46	46	50	46	46	50	46	46	50	46	46	50	46	46	50	46	46	50	46	46	50	46	46	50	46	46	50	46	46	50	46	46	50	46	46	50	46	46	50	46
				Exposed	46	50	46	46	50	46	46	50	46	46	50	46	46	50	46	46	50	46	46	50	46	46	50	46	46	50	46	46	50	46	46	50	46	46	50	46	46	50	46	46	50	0
		1:12	4.8	Non-Exposed	43	48	43	43	48	43	43	48	43	43	48	43	43	48	43	43	48	43	43	48	43	43	48	43	43	48	43	43	48	43	43	48	43	43	48	43	43	48	43	43	48	43
				Exposed	43	48	43	43	48	43	43	48	43	43	48	43	43	48	43	43	48	43	43	48	43	43	48	43	43	48	43	43	48	43	43	48	43	43	48	43	43	48	0	43	48	0
		2:12	9.5	Non-Exposed	41	46	41	41	46	41	41	46	41	41	46	41	41	46	41	41	46	41	41	46	41	41	46	41	41	46	41	41	46	41	41	46	41	41	45	41	41	45	41	41	45	41
				Exposed	41	46	41	41	46	41	41	46	41	41	46	41	41	46	41	41	46	41	41	46	41	41	46	41	41	46	41	41	46	41	41	46	41	41	45	41	41	45	0	41	0	0
		3:12	14.0	Non-Exposed	39	44	39	39	44	39	39	44	39	39	44	39	39	44	39	39	44	39	39	44	39	39	44	39	39	44	39	39	44	39	39	44	39	39	44	39	39	44	39	39	43	39
				Exposed	39	44	39	39	44	39	39	44	39	39	44	39	39	44	39	39	44	39	39	44	39	39	44	39	39	44	39	39	44	39	39	44	39	39	44	39	39	44	0	39	0	0
		4:12	18.4	Non-Exposed	39	44	39	39	44	39	39	44	39	39	44	39	39	44	39	39	44	39	39	44	39	39	44	39	39	44	39	39	44	39	39	44	39	39	44	39	39	44	39	39	43	39
				Exposed	39	44	39	39	44	39	39	44	39	39	44	39	39	44	39	39	44	39	39	44	39	39	44	39	39	44	39	39	44	39	39	44	39	39	44	39	39	44	0	39	0	0
		5:12	22.6	Non-Exposed	40	45	40	40	45	40	40	45	40	40	45	40	40	45	40	40	45	40	40	45	40	40	45	40	40	45	40	40	45	40	40	45	40	40	45	40	40	45	40	40	44	40
				Exposed	40	45	40	40	45	40	40	45	40	40	45	40	40	45	40	40	45	40	40	45	40	40	45	40	40	45	40	40	45	40	40	45	40	40	44	40	40	44	0	40	0	0
		6:12	26.6	Non-Exposed	0	0	0	0	0	0	0	0	0	0	0	0	0	0	0	0	0	0	0	0	0	0	0	0	0	0	0	0	0	0	0	0	0	0	0	0	0	0	0	0	0	0
				Exposed	0	0	0	0	0	0	0	0	0	0	0	0	0	0	0	0	0	0	0	0	0	0	0	0	0	0	0	0	0	0	0	0	0	0	0	0	0	0	0	0	0	0
		7:12	30.3	Non-Exposed	0	0	0	0	0	0	0	0	0	0	0	0	0	0	0	0	0	0	0	0	0	0	0	0	0	0	0	0	0	0	0	0	0	0	0	0	0	0	0	0	0	0
				Exposed	0	0	0	0	0	0	0	0	0	0	0	0	0	0	0	0	0	0	0	0	0	0	0	0	0	0	0	0	0	0	0	0	0	0	0	0	0	0	0	0	0	0
		8:12	33.7	Non-Exposed	45	49	45	45	49	45	45	49	45	45	49	45	45	49	45	45	49	45	45	49	45	45	49	45	45	48	45	45	48	45	45	47	45	45	47	45	45	46	45	45	45	45
				Exposed	45	49	45	45	49	45	45	49	45	45	49	45	45	49	45	45	49	45	45	49	45	45	49	45	45	48	45	45	48	45	45	47	45	45	47	45	45	46	0	45	0	0
		9:12	36.9	Non-Exposed	47	50	47	47	50	47	47	50	47	47	50	47	47	50	47	47	50	47	47	50	47	47	50	47	47	50	47	47	50	47	47	49	47	47	48	47	47	48	47	47	47	47
				Exposed	47	50	47	47	50	47	47	50	47	47	50	47	47	50	47	47	50	47	47	50	47	47	50	47	47	50	47	47	50	47	47	49	47	47	48	45	47	48	0	47	0	0
		10:12	39.8	Non-Exposed	50	50	50	50	50	50	50	50	50	50	50	50	50	50	50	50	50	50	50	50	50	50	50	50	50	50	50	50	50	50	50	50	50	50	50	50	49	49	49	49	49	49
				Exposed	50	50	50	50	50	50	50	50	50	50	50	50	50	50	50	50	50	50	50	50	50	50	50	50	50	50	50	50	50	50	50	50	48	50	50	0	49	49	0	49	0	0
		11:12	42.5	Non-Exposed	53	53	53	53	53	53	53	53	53	53	53	53	53	53	53	53	53	53	53	53	53	53	53	53	53	53	53	53	53	53	53	53	53	52	52	52	51	51	51	51	51	50
				Exposed	53	53	53	53	53	53	53	53	53	53	53	53	53	53	53	53	53	53	53	53	53	53	53	53	53	53	53	53	53	51	53	53	48	52	52	0	51	49	0	51	0	0
		12:12	45	Non-Exposed	56	56	56	56	56	56	56	56	56	56	56	56	56	56	56	56	56	56	56	56	56	56	56	56	56	56	56	56	56	56	55	55	55	54	54	54	53	53	52	53	53	49
				Exposed	56	56	56	56	56	56	56	56	56	56	56	56	56	56	56	56	56	56	56	56	56	56	56	56	56	62	55	56	56	51	55	55	48	54	51	0	53	49	0	53	0	0
	C	Flat	0	Non-Exposed	46	50	46	46	50	46	46	50	46	46	50	46	46	50	46	46	50	46	46	50	46	46	50	46	46	50	46	46	50	46	46	50	46	46	50	46	46	50	46	46	50	0
				Exposed	46	50	46	46	50	46	46	50	46	46	50	46	46	50	46	46	50	46	46	50	46	46	50	46	46	50	46	46	50	46	46	50	0	46	49	0	46	0	0	46	0	0
		1:12	4.8	Non-Exposed	43	48	43	43	48	43	43	48	43	43	48	43	43	48	43	43	48	43	43	48	43	43	48	43	43	48	43	43	48	43	43	48	43	43	48	43	43	48	43	43	48	0
				Exposed	43	48	43	43	48	43	43	48	43	43	48	43	43	48	43	43	48	43	43	48	43	43	48	43	43	48	43	43	48	43	43	48	0	43	48	0	43	0	0	43	0	0
		2:12	9.5	Non-Exposed	41	46	41	41	46	41	41	46	41	41	46	41	41	46	41	41	46	41	41	46	41	41	46	41	41	46	41	41	45	41	41	45	41	41	45	41	41	44	0	41	44	0
				Exposed	41	46	41	41	46	41	41	46	41	41	46	41	41	46	41	41	46	41	41	46	41	41	46	41	41	46	41	41	45	0	41	0	0	41	0	0	41	0	0	0	0	0
		3:12	14.0	Non-Exposed	39	44	39	39	44	39	39	44	39	39	44	39	39	44	39	39	44	39	39	44	39	39	44	39	39	44	39	39	44	39	39	43	39	39	43	39	39	43	0	39	42	0
				Exposed	39	44	39	39	44	39	39	44	39	39	44	39	39	44	39	39	44	39	39	44	39	39	44	39	39	44	39	39	44	0	39	0	0	39	0	0	39	0	0	0	0	0
		4:12	18.4	Non-Exposed	39	44	39	39	44	39	39	44	39	39	44	39	39	44	39	39	44	39	39	44	39	39	44	39	39	44	39	39	44	39	39	43	39	39	43	39	39	43	0	39	43	0
				Exposed	39	44	39	39	44	39	39	44	39	39	44	39	39	44	39	39	44	39	39	44	39	39	44	39	39	44	39	39	44	0	39	0	0	39	0	0	39	0	0	0	0	0
		5:12	22.6	Non-Exposed	40	45	40	40	45	40	40	45	40	40	45	40	40	45	40	40	45	40	40	45	40	40	45	40	40	45	40	40	45	40	40	44	40	40	44	40	40	44	0	40	43	0
				Exposed	40	45	40	40	45	40	40	45	40	40	45	40	40	45	40	40	45	40	40	45	40	40	45	40	40	45	40	40	45	40	40	44	40	40	44	0	40	0	0	40	0	0
		6:12	26.6	Non-Exposed	0	0	0	0	0	0	0	0	0	0	0	0	0	0	0	0	0	0	0	0	0	0	0	0	0	0	0	0	0	0	0	0	0	0	0	0	0	0	0	0	0	0
				Exposed	0	0	0	0	0	0	0	0	0	0	0	0	0	0	0	0	0	0	0	0	0	0	0	0	0	0	0	0	0	0	0	0	0	0	0	0	0	0	0	0	0	0
		7:12	30.3	Non-Exposed	0	0	0	0	0	0	0	0	0	0	0	0	0	0	0	0	0	0	0	0	0	0	0	0	0	0	0	0	0	0	0	0	0	0	0	0	0	0	0	0	0	0
				Exposed	0	0	0	0	0	0	0	0	0	0	0	0	0	0	0	0	0	0	0	0	0	0	0	0	0	0	0	0	0	0	0	0	0	0	0	0	0	0	0	0	0	0
		8:12	33.7	Non-Exposed	45	49	45	45	49	45	45	49	45	45	49	45	45	49	45	45	49	45	45	49	45	45	49	45	45	48	45	45	48	45	45	47	45	45	47	45	45	46	45	45	45	45
				Exposed	45	49	45	45	49	45	45	49	45	45	49	45	45	49	45	45	49	45	45	49	45	45	49	45	45	48	45	45	48	45	45	47	45	45	47	45	45	46	0	45	0	0
		9:12	36.9	Non-Exposed	47	50	47	47	50	47	47	50	47	47	50	47	47	50	47	47	50	47	47	50	47	47	50	47	47	50	47	47	50	47	47	49	47	47	48	47	47	48	47	47	47	47
				Exposed	47	50	47	47	50	47	47	50	47	47	50	47	47	50	47	47	50	47	47	50	47	47	50	47	47	50	47	47	50	47	47	49	47	47	48	45	47	48	0	47	0	0
		10:12	39.8	Non-Exposed	50	50	50	50	50	50	50	50	50	50	50	50	50	50	50	50	50	50	50	50	50	50	50	50	50	50	50	50	50	50	50	50	50	50	50	50	49	49	49	49	49	49
				Exposed	50	50	50	50	50	50	50	50	50	50	50	50	50	50	50	50	50	50	50	50	50	50	50	50	50	50	50	50	50	50	50	50	48	50	50	0	49	49	0	49	0	0
		11:12	42.5	Non-Exposed	53	53	53	53	53	53	53	53	53	53	53	53	53	53	53	53	53	53	53	53	53	53	53	53	53	53	53	53	53	53	53	53	53	52	52	52	51	51	51	51	51	50
				Exposed	53	53	53	53	53	53	53	53	53	53	53	53	53	53	53	53	53	53	53	53	53	53	53	53	53	53	53	53	53	51	53	53	48	52	52	0	51	49	0	51	0	0
		12:12	45	Non-Exposed	56	56	56	56	56	56	56	56	56	56	56	56	56	56	56	56	56	56	56	56	56	56	56	56	56	56	56	56	56	56	55	55	55	54	54	54	53	53	52	53	53	49
				Exposed	56	56	56	56	56	56	56	56	56	56	56	56	56	56	56	56	56	56	56	56	56	56	56	56	56	62	55	56	56	51	55	55	48	54	51	0	53	49	0	53	0	0
	D	Flat	0	Non-Exposed	46	50	46	46	50	46	46	50	46	46	50	46	46	50	46	46	50	46	46	50	46	46	50	46	46	50	46	46	50	46	46	50	46	46	50	46	46	50	0	46	49	0
				Exposed	46	50	46	46	50	46	46	50	46	46	50	46	46	50	46	46	50	46	46	50	46	46	50	46	46	50	0	46	50	0	46	47	0	46	0	0	46	0	0	46	0	0
		1:12	4.8	Non-Exposed	43	48	43	43	48	43	43	48	43	43	48	43	43	48	43	43	48	43	43	48	43	43	48	43	43	48	43	43	48	43	43	48	43	43	48	43	43	48	0	43	48	0
				Exposed	43	48	43	43	48	43	43	48	43	43	48	43	43	48	43	43	48	43	43	48	43	43	48	43	43	48	0	43	48	0	43	47	0	43	0	0	43	0	0	0	0	0
		2:12	9.5	Non-Exposed	41	46	41	41	46	41	41	46	41	41	46	41	41	46	41	41	46	41	41	46	41	41	46	41	41	45	41	41	45	41	41	45	41	41	44	0	41	0	0	41	0	0
				Exposed	41	46	41	41	46	41	41	46	41	41	46	41	41	46	41	41	46	41	41	46	41	41	46	41	41	45	0	41	0	0	41	0	0	41	0	0	0	0	0	0	0	0
		3:12	14.0	Non-Exposed	39	44	39	39	44	39	39	44	39	39	44	39	39	44	39	39	44	39	39	44	39	39	44	39	39	44	39	39	43	39	39	43	39	39	43	0	39	0	0	39	0	0
				Exposed	39	44	39	39	44	39	39	44	39	39	44	39	39	44	39	39	44	39	39	44	39	39	44	39	39	44	0	39	0	0	39	0	0	39	0	0	0	0	0	0	0	0
		4:12	18.4	Non-Exposed	39	44	39	39	44	39	39	44	39	39	44	39	39	44	39	39	44	39	39	44	39	39	44	39	39	44	39	39	43	39	39	43	39	39	43	0	39	0	0	39	0	0
				Exposed	39	44	39	39	44	39	39	44	39	39	44	39	39	44	39	39	44	39	39	44	39	39	44	39	39	44	0	39	0	0	39	0	0	0	0	0	0	0	0	0	0	0
		5:12	22.6	Non-Exposed	40	45	40	40	45	40	40	45	40	40	45	40	40	45	40	40	45	40	40	45	40	40	45	40	40	44	40	40	44	40	40	44	40	40	43	40	40	43	0	40	43	0
				Exposed	40	45	40	40	45	40	40	45	40	40	45	40	40	45	40	40	45	40	40	45	40	40	45	40	40	44	40	40	44	0	40	0	0	40	0	0	40	0	0	40	0	0
		6:12	26.6	Non-Exposed	0	0	0	0	0	0	0	0	0	0	0	0	0	0	0	0	0	0	0	0	0	0	0	0	0	0	0	0	0	0	0	0	0	0	0	0	0	0	0	0	0	0
				Exposed	0	0	0	0	0	0	0	0	0	0	0	0	0	0	0	0	0	0	0	0	0	0	0	0	0	0	0	0	0	0	0	0	0	0	0	0	0	0	0	0	0	0
		7:12	30.3	Non-Exposed	0	0	0	0	0	0	0	0	0	0	0	0	0	0	0	0	0	0	0	0	0	0	0	0	0	0	0	0	0	0	0	0	0	0	0	0	0	0	0	0	0	0
				Exposed	0	0	0	0	0	0	0	0	0	0	0	0	0	0	0	0	0	0	0	0	0	0	0	0	0	0	0	0	0	0	0	0	0	0	0	0	0	0	0	0	0	0
		8:12	33.7	Non-Exposed	45	49	45	45	49	45	45	49	45	45	49	45	45	49	45	45	49	45	45	48	45	45	48	45	45	47	45	45	47	45	45	46	45	45	46	45	45	45	45	44	44	44
				Exposed	45	49	45	45	49	45	45	49	45	45	49	45	45	49	45	45	49	45	45	48	45	45	48	45	45	47	45	45	47	45	45	46	0	45	46	0	45	0	0	0	0	0
		9:12	36.9	Non-Exposed	47	50	47	47	50	47	47	50	47	47	50	47	47	50	47	47	50	47	47	50	47	47	50	47	47	49	47	47	49	47	47	48	47	47	47	47	47	47	47	46	46	45
				Exposed	47	50	47	47	50	47	47	50	47	47	50	47	47	50	47	47	50	47	47	50	47	47	50	47	47	49	47	47	49	47	47	48	0	47	47	0	47	0	0	0	0	0
		10:12	39.8	Non-Exposed	50	50	50	50	50	50	50	50	50	50	50	50	50	50	50	50	50	50	50	50	50	50	50	50	50	50	50	50	50	50	50	50	50	49	49	49	48	48	48	48	48	45
				Exposed	50	50	50	50	50	50	50	50	50	50	50	50	50	50	50	50	50	50	50	50	50	50	50	50	50	50	50	50	50	47	50	50	0	49	47	0	48	0	0	0	0	0
		11:12	42.5	Non-Exposed	53	53	53	53	53	53	53	53	53	53	53	53	53	53	53	53	53	53	53	53	53	53	53	53	53	53	53	53	53	53	52	52	52	51	51	51	50	50	48	49	49	45
				Exposed	53	53	53	53	53	53	53	53	53	53	53	53	53	53	53	53	53	53	53	53	53	53	53	53	53	53	51	53	53	47	52	50	0	51	47	0	50	0	0	0	0	0
		12:12	45	Non-Exposed	56	56	56	56	56	56	56	56	56	56	56	56	56	56	56	56	56	56	56	56	56	56	56	56	56	56	55	55	55	54	54	54	53	53	51	52	52	48	51	51	45
				Exposed	56	56	56	56	56	56	56	56	56	56	56	56	56	56	56	56	56	56	56	56	56	56	56	55	56	56	50	55	54	47	54	50	0	53	47	0	52	0	0	0	0	0

Tamarack 2.3 Rail – Gable Flush-Mount on 30 Foot Maximum Mean Roof Height – Landscape – Panel Width = 45 Inches or Less

Ground Snow Load	Exposure Category	Roof Pitch	Roof Angle	Wind Speed (mph)	95			100			105			110			115			120			125			130			140			150			160			170			180			190		
				Roof Area	1	2	3	1	2	3	1	2	3	1	2	3	1	2	3	1	2	3	1	2	3	1	2	3	1	2	3	1	2	3	1	2	3	1	2	3	1	2	3	1	2	3
		Flat	0	Non-Exposed	44	49	44	44	49	44	44	49	44	44	49	44	44	49	44	44	49	44	44	49	44	44	49	44	44	49	44	44	49	44	44	49	44	44	49	44	44	49	44	44	49	44
				Exposed	44	49	44	44	49	44	44	49	44	44	49	44	44	49	44	44	49	44	44	49	44	44	49	44	44	49	44	44	49	44	44	49	44	44	49	44	44	49	44	44	49	0
		1:12	4.8	Non-Exposed	41	46	41	41	46	41	41	46	41	41	46	41	41	46	41	41	46	41	41	46	41	41	46	41	41	46	41	41	46	41	41	46	41	41	46	41	41	46	41	41	46	41
				Exposed	41	46	41	41	46	41	41	46	41	41	46	41	41	46	41	41	46	41	41	46	41	41	46	41	41	46	41	41	46	41	41	46	41	41	46	41	41	46	0	41	46	0
		2:12	9.5	Non-Exposed	39	43	39	39	43	39	39	43	39	39	43	39	39	43	39	39	43	39	39	43	39	39	43	39	39	43	39	39	43	39	39	43	39	39	43	39	39	43	39	39	43	39
				Exposed	39	43	39	39	43	39	39	43	39	39	43	39	39	43	39	39	43	39	39	43	39	39	43	39	39	43	39	39	43	39	39	43	39	39	43	39	39	43	0	39	0	0
		3:12	14.0	Non-Exposed	37	42	37	37	42	37	37	42	37	37	42	37	37	42	37	37	42	37	37	42	37	37	42	37	37	42	37	37	42	37	37	42	37	37	42	37	37	42	37	37	41	37
				Exposed	37	42	37	37	42	37	37	42	37	37	42	37	37	42	37	37	42	37	37	42	37	37	42	37	37	42	37	37	42	37	37	42	37	37	42	37	37	42	0	37	0	0
		4:12	18.4	Non-Exposed	37	42	37	37	42	37	37	42	37	37	42	37	37	42	37	37	42	37	37	42	37	37	42	37	37	42	37	37	42	37	37	42	37	37	42	37	37	42	37	37	41	37
				Exposed	37	42	37	37	42	37	37	42	37	37	42	37	37	42	37	37	42	37	37	42	37	37	42	37	37	42	37	37	42	37	37	42	37	37	42	37	37	42	0	37	0	0
		5:12	22.6	Non-Exposed	0	0	0	0	0	0	0	0	0	0	0	0	0	0	0	0	0	0	0	0	0	0	0	0	0	0	0	0	0	0	0	0	0	0	0	0	0	0	0	0	0	0
				Exposed	0	0	0	0	0	0	0	0	0	0	0	0	0	0	0	0	0	0	0	0	0	0	0	0	0	0	0	0	0	0	0	0	0	0	0	0	0	0	0	0	0	0
	B	6:12	26.6	Non-Exposed	0	0	0	0	0	0	0	0	0	0	0	0	0	0	0	0	0	0	0	0	0	0	0	0	0	0	0	0	0	0	0	0	0	0	0	0	0	0	0	0	0	0
				Exposed	0	0	0	0	0	0	0	0	0	0	0	0	0	0	0	0	0	0	0	0	0	0	0	0	0	0	0	0	0	0	0	0	0	0	0	0	0	0	0	0	0	0
		7:12	30.3	Non-Exposed	0	0	0	0	0	0	0	0	0	0	0	0	0	0	0	0	0	0	0	0	0	0	0	0	0	0	0	0	0	0	0	0	0	0	0	0	0	0	0	0	0	0
				Exposed	0	0	0	0	0	0	0	0	0	0	0	0	0	0	0	0	0	0	0	0	0	0	0	0	0	0	0	0	0	0	0	0	0	0	0	0	0	0	0	0	0	0
		8:12	33.7	Non-Exposed	0	0	0	0	0	0	0	0	0	0	0	0	0	0	0	0	0	0	0	0	0	0	0	0	0	0	0	0	0	0	0	0	0	0	0	0	0	0	0	0	0	0
				Exposed	0	0	0	0	0	0	0	0	0	0	0	0	0	0	0	0	0	0	0	0	0	0	0	0	0	0	0	0	0	0	0	0	0	0	0	0	0	0	0	0	0	0
		9:12	36.9	Non-Exposed	0	0	0	0	0	0	0	0	0	0	0	0	0	0	0	0	0	0	0	0	0	0	0	0	0	0	0	0	0	0	0	0	0	0	0	0	0	0	0	0	0	0
				Exposed	0	0	0	0	0	0	0	0	0	0	0	0	0	0	0	0	0	0	0	0	0	0	0	0	0	0	0	0	0	0	0	0	0	0	0	0	0	0	0	0	0	0
		10:12	39.8	Non-Exposed	47	50	47	47	50	47	47	50	47	47	50	47	47	50	47	47	50	47	47	50	47	47	50	47	47	50	47	47	50	47	47	49	47	47	48	47	47	48	47	47	47	47
				Exposed	47	50	47	47	50	47	47	50	47	47	50	47	47	50	47	47	50	47	47	50	47	47	50	47	47	50	47	47	50	47	47	49	47	47	48	0	47	48	0	47	0	0
		11:12	42.5	Non-Exposed	50	50	50	50	50	50	50	50	50	50	50	50	50	50	50	50	50	50	50	50	50	50	50	50	50	50	50	50	50	50	50	50	50	50	50	50	50	50	50	49	49	49
				Exposed	50	50	50	50	50	50	50	50	50	50	50	50	50	50	50	50	50	50	50	50	50	50	50	50	50	50	50	50	50	50	50	50	48	50	50	0	50	49	0	49	0	0
		12:12	45	Non-Exposed	53	53	53	53	53	53	53	53	53	53	53	53	53	53	53	53	53	53	53	53	53	53	53	53	53	53	53	53	53	53	53	53	53	52	52	52	52	52	52	51	51	49
				Exposed	53	53	53	53	53	53	53	53	53	53	53	53	53	53	53	53	53	53	53	53	53	53	53	53	53	62	53	53	53	51	53	53	48	52	51	0	52	49	0	51	0	0
		Flat	0	Non-Exposed	44	49	44	44	49	44	44	49	44	44	49	44	44	49	44	44	49	44	44	49	44	44	49	44	44	49	44	44	49	44	44	49	44	44	49	44	44	49	0	44	49	0
				Exposed	44	49	44	44	49	44	44	49	44	44	49	44	44	49	44	44	49	44	44	49	44	44	49	44	44	49	44	44	49	44	44	49	0	44	49	0	44	0	0	44	0	0
		1:12	4.8	Non-Exposed	41	46	41	41	46	41	41	46	41	41	46	41	41	46	41	41	46	41	41	46	41	41	46	41	41	46	41	41	46	41	41	46	41	41	46	41	41	46	41	41	46	0
				Exposed	41	46	41	41	46	41	41	46	41	41	46	41	41	46	41	41	46	41	41	46	41	41	46	41	41	46	41	41	46	41	41	46	0	41	46	0	41	0	0	41	0	0
		2:12	9.5	Non-Exposed	39	43	39	39	43	39	39	43	39	39	43	39	39	43	39	39	43	39	39	43	39	39	43	39	39	43	39	39	43	39	39	43	39	39	43	39	39	42	0	39	42	0
				Exposed	39	43	39	39	43	39	39	43	39	39	43	39	39	43	39	39	43	39	39	43	39	39	43	39	39	43	39	39	43	0	39	0	0	39	0	0	39	0	0	0	0	0
		3:12	14.0	Non-Exposed	37	42	37	37	42	37	37	42	37	37	42	37	37	42	37	37	42	37	37	42	37	37	42	37	37	42	37	37	42	37	37	41	37	37	41	37	37	41	0	37	41	0
				Exposed	37	42	37	37	42	37	37	42	37	37	42	37	37	42	37	37	42	37	37	42	37	37	42	37	37	42	37	37	42	0	37	0	0	37	0	0	37	0	0	0	0	0
		4:12	18.4	Non-Exposed	37	42	37	37	42	37	37	42	37	37	42	37	37	42	37	37	42	37	37	42	37	37	42	37	37	42	37	37	42	37	37	41	37	37	41	37	37	41	0	37	41	0
				Exposed	37	42	37	37	42	37	37	42	37	37	42	37	37	42	37	37	42	37	37	42	37	37	42	37	37	42	37	37	42	0	37	0	0	37	0	0	37	0	0	0	0	0
		5:12	22.6	Non-Exposed	0	0	0	0	0	0	0	0	0	0	0	0	0	0	0	0	0	0	0	0	0	0	0	0	0	0	0	0	0	0	0	0	0	0	0	0	0	0	0	0	0	0
				Exposed	0	0	0	0	0	0	0	0	0	0	0	0	0	0	0	0	0	0	0	0	0	0	0	0	0	0	0	0	0	0	0	0	0	0	0	0	0	0	0	0	0	0
100	C	6:12	26.6	Non-Exposed	0	0	0	0	0	0	0	0	0	0	0	0	0	0	0	0	0	0	0	0	0	0	0	0	0	0	0	0	0	0	0	0	0	0	0	0	0	0	0	0	0	0
				Exposed	0	0	0	0	0	0	0	0	0	0	0	0	0	0	0	0	0	0	0	0	0	0	0	0	0	0	0	0	0	0	0	0	0	0	0	0	0	0	0	0	0	0
		7:12	30.3	Non-Exposed	0	0	0	0	0	0	0	0	0	0	0	0	0	0	0	0	0	0	0	0	0	0	0	0	0	0	0	0	0	0	0	0	0	0	0	0	0	0	0	0	0	0
				Exposed	0	0	0	0	0	0	0	0	0	0	0	0	0	0	0	0	0	0	0	0	0	0	0	0	0	0	0	0	0	0	0	0	0	0	0	0	0	0	0	0	0	0
		8:12	33.7	Non-Exposed	0	0	0	0	0	0	0	0	0	0	0	0	0	0	0	0	0	0	0	0	0	0	0	0	0	0	0	0	0	0	0	0	0	0	0	0	0	0	0	0	0	0
				Exposed	0	0	0	0	0	0	0	0	0	0	0	0	0	0	0	0	0	0	0	0	0	0	0	0	0	0	0	0	0	0	0	0	0	0	0	0	0	0	0	0	0	0
		9:12	36.9	Non-Exposed	0	0	0	0	0	0	0	0	0	0	0	0	0	0	0	0	0	0	0	0	0	0	0	0	0	0	0	0	0	0	0	0	0	0	0	0	0	0	0	0	0	0
				Exposed	0	0	0	0	0	0	0	0	0	0	0	0	0	0	0	0	0	0	0	0	0	0	0	0	0	0	0	0	0	0	0	0	0	0	0	0	0	0	0	0	0	0
		10:12	39.8	Non-Exposed	47	50	47	47	50	47	47	50	47	47	50	47	47	50	47	47	50	47	47	50	47	47	50	47	47	50	47	47	50	47	47	49	47	47	48	47	47	48	47	47	46	46
				Exposed	47	50	47	47	50	47	47	50	47	47	50	47	47	50	47	47	50	47	47	50	47	47	50	47	47	49	47	47	49	47	47	48	0	47	47	0	47	0	0	0	0	0
		11:12	42.5	Non-Exposed	50	50	50	50	50	50	50	50	50	50	50	50	50	50	50	50	50	50	50	50	50	50	50	50	50	50	50	50	50	50	50	50	50	49	49	49	48	48	48	48	48	45
				Exposed	50	50	50	50	50	50	50	50	50	50	50	50	50	50	50	50	50	50	50	50	50	50	50	50	50	50	50	50	50	47	50	50	0	49	47	0	48	0	0	0	0	0
		12:12	45	Non-Exposed	53	53	53	53	53	53	53	53	53	53	53	53	53	53	53	53	53	53	53	53	53	53	53	53	53	53	53	53	53	53	52	52	52	51	51	51	50	50	48	49	49	45
				Exposed	53	53	53	53	53	53	53	53	53	53	53	53	53	53	53	53	53	53	53	53	53	53	53	53	53	53	50	53	53	47	52	50	0	51	47	0	50	0	0	0	0	0
		Flat	0	Non-Exposed	44	49	44	44	49	44	44	49	44	44	49	44	44	49	44	44	49	44	44	49	44	44	49	44	44	49	44	44	49	44	44	49	44	44	49	44	44	49	0	44	48	0
				Exposed	44	49	44	44	49	44	44	49	44	44	49	44	44	49	44	44	49	44	44	49	44	44	49	44	44	49	0	44	49	0	44	47	0	44	0	0	44	0	0	44	0	0
		1:12	4.8	Non-Exposed	41	46	41	41	46	41	41	46	41	41	46	41	41	46	41	41	46	41	41	46	41	41	46	41	41	46	41	41	46	41	41	46	41	41	46	41	41	46	0	41	45	0
				Exposed	41	46	41	41	46	41	41	46	41	41	46	41	41	46	41	41	46	41	41	46	41	41	46	41	41	46	0	41	46	0	41	46	0	41	0	0	41	0	0	0	0	0
		2:12	9.5	Non-Exposed	39	43	39	39	43	39	39	43	39	39	43	39	39	43	39	39	43	39	39	43	39	39	43	39	39	43	39	39	43	39	39	43	39	39	42	0	39	0	0	39	0	0
				Exposed	39	43	39	39	43	39	39	43	39	39	43	39	39	43	39	39	43	39	39	43	39	39	43	39	39	43	0	39	0	0	39	0	0	39	0	0	0	0	0	0	0	0
		3:12	14.0	Non-Exposed	37	42	37	37	42	37	37	42	37	37	42	37	37	42	37	37	42	37	37	42	37	37	42	37	37	42	37	37	41	37	37	41	37	37	41	0	37	0	0	37	0	0
				Exposed	37	42	37	37	42	37	37	42	37	37	42	37	37	42	37	37	42	37	37	42	37	37	42	37	37	42	0	37	0	0	37	0	0	0	0	0	0	0	0	0	0	0
		4:12	18.4	Non-Exposed	37	42	37	37	42	37	37	42	37	37	42	37	37	42	37	37	42	37	37	42	37	37	42	37	37	42	37	37	41	37	37	41	37	37	41	0	37	0	0	37	0	0
				Exposed	37	42	37	37	42	37	37	42	37	37	42	37	37	42	37	37	42	37	37	42	37	37	42	37	37	42	0	37	0	0	37	0	0	0	0	0	0	0	0	0	0	0
		5:12	22.6	Non-Exposed	0	0	0	0	0	0	0	0	0	0	0	0	0	0	0	0	0	0	0	0	0	0	0	0	0	0	0	0	0	0	0	0	0	0	0	0	0	0	0	0	0	0
				Exposed	0	0	0	0	0	0	0	0	0	0	0	0	0	0	0	0	0	0	0	0	0	0	0	0	0	0	0	0	0	0	0	0	0	0	0	0	0	0	0	0	0	0
	D	6:12	26.6	Non-Exposed	0	0	0	0	0	0	0	0	0	0	0	0	0	0	0	0	0	0	0	0	0	0	0	0	0	0	0	0	0	0	0	0	0	0	0	0	0	0	0	0	0	0
				Exposed	0	0	0	0	0	0	0	0	0	0	0	0	0	0	0	0	0	0	0	0	0	0	0	0	0	0	0	0	0	0	0	0	0	0	0	0	0	0	0	0	0	0
		7:12	30.3	Non-Exposed	0	0	0	0	0	0	0	0	0	0	0	0	0	0	0	0	0	0	0	0	0	0	0	0	0	0	0	0	0	0	0	0	0	0	0	0	0	0	0	0	0	0
				Exposed	0	0	0	0	0	0	0	0	0	0	0	0	0	0	0	0	0	0	0	0	0	0	0	0	0	0	0	0	0	0	0	0	0	0	0	0	0	0	0	0	0	0
		8:12	33.7	Non-Exposed	0	0	0	0	0	0	0	0	0	0	0	0	0	0	0	0	0	0	0	0	0	0	0	0	0	0	0	0	0	0	0	0	0	0	0	0	0	0	0	0	0	0
				Exposed	0	0	0	0	0	0	0	0	0	0	0	0	0	0	0	0	0	0	0	0	0	0	0	0	0	0	0	0	0	0	0	0	0	0	0	0	0	0	0	0	0	0
		9:12	36.9	Non-Exposed	0	0	0	0	0	0	0	0	0	0	0	0	0	0	0	0	0	0	0	0	0	0	0	0	0	0	0	0	0	0	0	0	0	0	0	0	0	0	0	0	0	0
				Exposed	0	0	0	0	0	0	0	0	0	0	0	0	0	0	0	0	0	0	0	0	0	0	0	0	0	0	0	0	0	0	0	0	0	0	0	0	0	0	0	0	0	0
		10:12	39.8	Non-Exposed	47	50	47	47	50	47	47	50	47	47	50	47	47	50	47	47	50	47	47	50	47	47	50	47	47	49	47	47	49	47	47	48	47	47	47	47	47	47	47	46	46	45
				Exposed	47	50	47	47	50	47	47	50	47	47	50	47	47	50	47	47	50	47	47	50	47	47	50	47	47	49	47	47	49	47	47	48	0	47	47	0	47	0	0	0	0	0
		11:12	42.5	Non-Exposed	50	50	50	50	50	50	50	50	50	50	50	50	50	50	50	50	50	50	50	50	50	50	50	50	50	50	50	50	50	50	50	50	50	49	49	49	48	48	48	48	48	45
				Exposed	50	50	50	50	50	50	50	50	50	50	50	50	50	50	50	50	50	50	50	50	50	50	50	50	50	50	50	50	50	47	50	50	0	49	47	0	48	0	0	0	0	0
		12:12	45	Non-Exposed	53	53	53	53	53	53	53	53	53	53	53	53	53	53	53	53	53	53	53	53	53	53	53	53	53	53	53	53	53	53	52	52	52	51	51	51	50	50	48	49	49	45
				Exposed	53	53	53	53	53	53	53	53	53	53	53	53	53	53	53	53	53	53	53	53	53	53	53	53	53	53	50	53	53	47	52	50	0	51	47	0	50	0	0	0	0	0

Tamarack 2.3 Rail – Gable Flush-Mount on 30 Foot Maximum Mean Roof Height – Landscape – Panel Width = 45 Inches or Less

Ground Snow Load	Exposure Category	Roof Pitch	Roof Angle	Wind Speed (mph)	95			100			105			110			115			120			125			130			140			150			160			170			180			190		
				Roof Area	1	2	3	1	2	3	1	2	3	1	2	3	1	2	3	1	2	3	1	2	3	1	2	3	1	2	3	1	2	3	1	2	3	1	2	3	1	2	3	1	2	3
110	B	Flat	0	Non-Exposed	42	47	42	42	47	42	42	47	42	42	47	42	42	47	42	42	47	42	42	47	42	42	47	42	42	47	42	42	47	42	42	47	42	42	47	42	42	47	42	42	47	42
				Exposed	42	47	42	42	47	42	42	47	42	42	47	42	42	47	42	42	47	42	42	47	42	42	47	42	42	47	42	42	47	42	42	47	42	42	47	42	42	47	42	42	47	0
		1:12	4.8	Non-Exposed	39	44	39	39	44	39	39	44	39	39	44	39	39	44	39	39	44	39	39	44	39	39	44	39	39	44	39	39	44	39	39	44	39	39	44	39	39	44	39	39	44	39
				Exposed	39	44	39	39	44	39	39	44	39	39	44	39	39	44	39	39	44	39	39	44	39	39	44	39	39	44	39	39	44	39	39	44	39	39	44	39	39	44	0	39	44	0
		2:12	9.5	Non-Exposed	37	42	37	37	42	37	37	42	37	37	42	37	37	42	37	37	42	37	37	42	37	37	42	37	37	42	37	37	42	37	37	42	37	37	42	37	37	41	37	37	41	37
				Exposed	37	42	37	37	42	37	37	42	37	37	42	37	37	42	37	37	42	37	37	42	37	37	42	37	37	42	37	37	42	37	37	42	37	37	42	37	37	41	0	37	0	0
		3:12	14.0	Non-Exposed	35	40	35	35	40	35	35	40	35	35	40	35	35	40	35	35	40	35	35	40	35	35	40	35	35	40	35	35	40	35	35	40	35	35	40	35	35	40	35	35	40	35
				Exposed	35	40	35	35	40	35	35	40	35	35	40	35	35	40	35	35	40	35	35	40	35	35	40	35	35	40	35	35	40	35	35	40	35	35	40	35	35	40	0	35	0	0
		4:12	18.4	Non-Exposed	0	0	0	0	0	0	0	0	0	0	0	0	0	0	0	0	0	0	0	0	0	0	0	0	0	0	0	0	0	0	0	0	0	0	0	0	0	0	0	0	0	0
				Exposed	0	0	0	0	0	0	0	0	0	0	0	0	0	0	0	0	0	0	0	0	0	0	0	0	0	0	0	0	0	0	0	0	0	0	0	0	0	0	0	0	0	0
		5:12	22.6	Non-Exposed	0	0	0	0	0	0	0	0	0	0	0	0	0	0	0	0	0	0	0	0	0	0	0	0	0	0	0	0	0	0	0	0	0	0	0	0	0	0	0	0	0	0
				Exposed	0	0	0	0	0	0	0	0	0	0	0	0	0	0	0	0	0	0	0	0	0	0	0	0	0	0	0	0	0	0	0	0	0	0	0	0	0	0	0	0	0	0
		6:12	26.6	Non-Exposed	0	0	0	0	0	0	0	0	0	0	0	0	0	0	0	0	0	0	0	0	0	0	0	0	0	0	0	0	0	0	0	0	0	0	0	0	0	0	0	0	0	0
				Exposed	0	0	0	0	0	0	0	0	0	0	0	0	0	0	0	0	0	0	0	0	0	0	0	0	0	0	0	0	0	0	0	0	0	0	0	0	0	0	0	0	0	0
		7:12	30.3	Non-Exposed	0	0	0	0	0	0	0	0	0	0	0	0	0	0	0	0	0	0	0	0	0	0	0	0	0	0	0	0	0	0	0	0	0	0	0	0	0	0	0	0	0	0
				Exposed	0	0	0	0	0	0	0	0	0	0	0	0	0	0	0	0	0	0	0	0	0	0	0	0	0	0	0	0	0	0	0	0	0	0	0	0	0	0	0	0	0	0
		8:12	33.7	Non-Exposed	0	0	0	0	0	0	0	0	0	0	0	0	0	0	0	0	0	0	0	0	0	0	0	0	0	0	0	0	0	0	0	0	0	0	0	0	0	0	0	0	0	0
				Exposed	0	0	0	0	0	0	0	0	0	0	0	0	0	0	0	0	0	0	0	0	0	0	0	0	0	0	0	0	0	0	0	0	0	0	0	0	0	0	0	0	0	0
		9:12	36.9	Non-Exposed	0	0	0	0	0	0	0	0	0	0	0	0	0	0	0	0	0	0	0	0	0	0	0	0	0	0	0	0	0	0	0	0	0	0	0	0	0	0	0	0	0	0
				Exposed	0	0	0	0	0	0	0	0	0	0	0	0	0	0	0	0	0	0	0	0	0	0	0	0	0	0	0	0	0	0	0	0	0	0	0	0	0	0	0	0	0	0
		10:12	39.8	Non-Exposed	0	0	0	0	0	0	0	0	0	0	0	0	0	0	0	0	0	0	0	0	0	0	0	0	0	0	0	0	0	0	0	0	0	0	0	0	0	0	0	0	0	0
				Exposed	0	0	0	0	0	0	0	0	0	0	0	0	0	0	0	0	0	0	0	0	0	0	0	0	0	0	0	0	0	0	0	0	0	0	0	0	0	0	0	0	0	0
		11:12	42.5	Non-Exposed	0	0	0	0	0	0	0	0	0	0	0	0	0	0	0	0	0	0	0	0	0	0	0	0	0	0	0	0	0	0	0	0	0	0	0	0	0	0	0	0	0	0
				Exposed	0	0	0	0	0	0	0	0	0	0	0	0	0	0	0	0	0	0	0	0	0	0	0	0	0	0	0	0	0	0	0	0	0	0	0	0	0	0	0	0	0	0
		12:12	45	Non-Exposed	51	51	51	51	51	51	51	51	51	51	51	51	51	51	51	51	51	51	51	51	51	51	51	51	51	51	51	51	51	51	51	51	51	51	51	51	51	51	51	51	51	51
				Exposed	51	51	51	51	51	51	51	51	51	51	51	51	51	51	51	51	51	51	51	51	51	51	51	51	51	51	51	51	51	51	51	51	51	51	51	51	51	51	51	51	51	48
	C	Flat	0	Non-Exposed	42	47	42	42	47	42	42	47	42	42	47	42	42	47	42	42	47	42	42	47	42	42	47	42	42	47	42	42	47	42	42	47	42	42	47	42	42	47	42	42	47	0
				Exposed	42	47	42	42	47	42	42	47	42	42	47	42	42	47	42	42	47	42	42	47	42	42	47	42	42	47	42	42	47	42	42	47	0	42	47	0	42	0	0	42	0	0
		1:12	4.8	Non-Exposed	39	44	39	39	44	39	39	44	39	39	44	39	39	44	39	39	44	39	39	44	39	39	44	39	39	44	39	39	44	39	39	44	39	39	44	39	39	44	39	39	44	0
				Exposed	39	44	39	39	44	39	39	44	39	39	44	39	39	44	39	39	44	39	39	44	39	39	44	39	39	44	39	39	44	39	39	44	0	39	44	0	39	0	0	39	0	0
		2:12	9.5	Non-Exposed	37	42	37	37	42	37	37	42	37	37	42	37	37	42	37	37	42	37	37	42	37	37	42	37	37	42	37	37	41	37	37	41	37	37	41	37	37	41	0	37	40	0
				Exposed	37	42	37	37	42	37	37	42	37	37	42	37	37	42	37	37	42	37	37	42	37	37	42	37	37	42	37	37	41	0	37	0	0	37	0	0	37	0	0	0	0	0
		3:12	14.0	Non-Exposed	35	40	35	35	40	35	35	40	35	35	40	35	35	40	35	35	40	35	35	40	35	35	40	35	35	40	35	35	40	35	35	40	35	35	39	35	35	39	0	35	39	0
				Exposed	35	40	35	35	40	35	35	40	35	35	40	35	35	40	35	35	40	35	35	40	35	35	40	35	35	40	35	35	40	0	35	0	0	35	0	0	35	0	0	0	0	0
		4:12	18.4	Non-Exposed	0	0	0	0	0	0	0	0	0	0	0	0	0	0	0	0	0	0	0	0	0	0	0	0	0	0	0	0	0	0	0	0	0	0	0	0	0	0	0	0	0	0
				Exposed	0	0	0	0	0	0	0	0	0	0	0	0	0	0	0	0	0	0	0	0	0	0	0	0	0	0	0	0	0	0	0	0	0	0	0	0	0	0	0	0	0	0
		5:12	22.6	Non-Exposed	0	0	0	0	0	0	0	0	0	0	0	0	0	0	0	0	0	0	0	0	0	0	0	0	0	0	0	0	0	0	0	0	0	0	0	0	0	0	0	0	0	0
				Exposed	0	0	0	0	0	0	0	0	0	0	0	0	0	0	0	0	0	0	0	0	0	0	0	0	0	0	0	0	0	0	0	0	0	0	0	0	0	0	0	0	0	0
		6:12	26.6	Non-Exposed	0	0	0	0	0	0	0	0	0	0	0	0	0	0	0	0	0	0	0	0	0	0	0	0	0	0	0	0	0	0	0	0	0	0	0	0	0	0	0	0	0	0
				Exposed	0	0	0	0	0	0	0	0	0	0	0	0	0	0	0	0	0	0	0	0	0	0	0	0	0	0	0	0	0	0	0	0	0	0	0	0	0	0	0	0	0	0
		7:12	30.3	Non-Exposed	0	0	0	0	0	0	0	0	0	0	0	0	0	0	0	0	0	0	0	0	0	0	0	0	0	0	0	0	0	0	0	0	0	0	0	0	0	0	0	0	0	0
				Exposed	0	0	0	0	0	0	0	0	0	0	0	0	0	0	0	0	0	0	0	0	0	0	0	0	0	0	0	0	0	0	0	0	0	0	0	0	0	0	0	0	0	0
		8:12	33.7	Non-Exposed	0	0	0	0	0	0	0	0	0	0	0	0	0	0	0	0	0	0	0	0	0	0	0	0	0	0	0	0	0	0	0	0	0	0	0	0	0	0	0	0	0	0
				Exposed	0	0	0	0	0	0	0	0	0	0	0	0	0	0	0	0	0	0	0	0	0	0	0	0	0	0	0	0	0	0	0	0	0	0	0	0	0	0	0	0	0	0
		9:12	36.9	Non-Exposed	0	0	0	0	0	0	0	0	0	0	0	0	0	0	0	0	0	0	0	0	0	0	0	0	0	0	0	0	0	0	0	0	0	0	0	0	0	0	0	0	0	0
				Exposed	0	0	0	0	0	0	0	0	0	0	0	0	0	0	0	0	0	0	0	0	0	0	0	0	0	0	0	0	0	0	0	0	0	0	0	0	0	0	0	0	0	0
		10:12	39.8	Non-Exposed	0	0	0	0	0	0	0	0	0	0	0	0	0	0	0	0	0	0	0	0	0	0	0	0	0	0	0	0	0	0	0	0	0	0	0	0	0	0	0	0	0	0
				Exposed	0	0	0	0	0	0	0	0	0	0	0	0	0	0	0	0	0	0	0	0	0	0	0	0	0	0	0	0	0	0	0	0	0	0	0	0	0	0	0	0	0	0
		11:12	42.5	Non-Exposed	0	0	0	0	0	0	0	0	0	0	0	0	0	0	0	0	0	0	0	0	0	0	0	0	0	0	0	0	0	0	0	0	0	0	0	0	0	0	0	0	0	0
				Exposed	0	0	0	0	0	0	0	0	0	0	0	0	0	0	0	0	0	0	0	0	0	0	0	0	0	0	0	0	0	0	0	0	0	0	0	0	0	0	0	0	0	0
		12:12	45	Non-Exposed	51	51	51	51	51	51	51	51	51	51	51	51	51	51	51	51	51	51	51	51	51	51	51	51	51	51	51	51	51	51	51	51	51	51	51	50	50	50	49	49	49
				Exposed	51	51	51	51	51	51	51	51	51	51	51	51	51	51	51	51	51	51	51	51	51	51	51	51	62	51	51	51	51	51	51	48	51	51	0	50	49	0	49	0	0
	D	Flat	0	Non-Exposed	42	47	42	42	47	42	42	47	42	42	47	42	42	47	42	42	47	42	42	47	42	42	47	42	42	47	42	42	47	42	42	47	42	42	47	42	42	47	0	42	46	0
				Exposed	42	47	42	42	47	42	42	47	42	42	47	42	42	47	42	42	47	42	42	47	42	42	47	42	42	47	0	42	47	0	42	47	0	42	0	0	42	0	0	42	0	0
		1:12	4.8	Non-Exposed	39	44	39	39	44	39	39	44	39	39	44	39	39	44	39	39	44	39	39	44	39	39	44	39	39	44	39	39	44	39	39	44	39	39	44	39	39	44	0	39	44	0
				Exposed	39	44	39	39	44	39	39	44	39	39	44	39	39	44	39	39	44	39	39	44	39	39	44	39	39	44	0	39	44	0	39	44	0	39	0	0	39	0	0	0	0	0
		2:12	9.5	Non-Exposed	37	42	37	37	42	37	37	42	37	37	42	37	37	42	37	37	42	37	37	42	37	37	42	37	37	41	37	37	41	37	37	41	37	37	41	0	37	0	0	37	0	0
				Exposed	37	42	37	37	42	37	37	42	37	37	42	37	37	42	37	37	42	37	37	42	37	37	42	37	37	41	0	37	0	0	37	0	0	37	0	0	0	0	0	0	0	0
		3:12	14.0	Non-Exposed	35	40	35	35	40	35	35	40	35	35	40	35	35	40	35	35	40	35	35	40	35	35	40	35	35	40	35	35	40	35	35	39	35	35	39	0	35	0	0	35	0	0
				Exposed	35	40	35	35	40	35	35	40	35	35	40	35	35	40	35	35	40	35	35	40	35	35	40	35	35	40	0	35	0	0	35	0	0	35	0	0	0	0	0	0	0	0
		4:12	18.4	Non-Exposed	0	0	0	0	0	0	0	0	0	0	0	0	0	0	0	0	0	0	0	0	0	0	0	0	0	0	0	0	0	0	0	0	0	0	0	0	0	0	0	0	0	0
				Exposed	0	0	0	0	0	0	0	0	0	0	0	0	0	0	0	0	0	0	0	0	0	0	0	0	0	0	0	0	0	0	0	0	0	0	0	0	0	0	0	0	0	0
		5:12	22.6	Non-Exposed	0	0	0	0	0	0	0	0	0	0	0	0	0	0	0	0	0	0	0	0	0	0	0	0	0	0	0	0	0	0	0	0	0	0	0	0	0	0	0	0	0	0
				Exposed	0	0	0	0	0	0	0	0	0	0	0	0	0	0	0	0	0	0	0	0	0	0	0	0	0	0	0	0	0	0	0	0	0	0	0	0	0	0	0	0	0	0
		6:12	26.6	Non-Exposed	0	0	0	0	0	0	0	0	0	0	0	0	0	0	0	0	0	0	0	0	0	0	0	0	0	0	0	0	0	0	0	0	0	0	0	0	0	0	0	0	0	0
				Exposed	0	0	0	0	0	0	0	0	0	0	0	0	0	0	0	0	0	0	0	0	0	0	0	0	0	0	0	0	0	0	0	0	0	0	0	0	0	0	0	0	0	0
		7:12	30.3	Non-Exposed	0	0	0	0	0	0	0	0	0	0	0	0	0	0	0	0	0	0	0	0	0	0	0	0	0	0	0	0	0	0	0	0	0	0	0	0	0	0	0	0	0	0
				Exposed	0	0	0	0	0	0	0	0	0	0	0	0	0	0	0	0	0	0	0	0	0	0	0	0	0	0	0	0	0	0	0	0	0	0	0	0	0	0	0	0	0	0
		8:12	33.7	Non-Exposed	0	0	0	0	0	0	0	0	0	0	0	0	0	0	0	0	0	0	0	0	0	0	0	0	0	0	0	0	0	0	0	0	0	0	0	0	0	0	0	0	0	0
				Exposed	0	0	0	0	0	0	0	0	0	0	0	0	0	0	0	0	0	0	0	0	0	0	0	0	0	0	0	0	0	0	0	0	0	0	0	0	0	0	0	0	0	0
		9:12	36.9	Non-Exposed	0	0	0	0	0	0	0	0	0	0	0	0	0	0	0	0	0	0	0	0	0	0	0	0	0	0	0	0	0	0	0	0	0	0	0	0	0	0	0	0	0	0
				Exposed	0	0	0	0	0	0	0	0	0	0	0	0	0	0	0	0	0	0	0	0	0	0	0	0	0	0	0	0	0	0	0	0	0	0	0	0	0	0	0	0	0	0
		10:12	39.8	Non-Exposed	0	0	0	0	0	0	0	0	0	0	0	0	0	0	0	0	0	0	0	0	0	0	0	0	0	0	0	0	0	0	0	0	0	0	0	0	0	0	0	0	0	0
				Exposed	0	0	0	0	0	0	0	0	0	0	0	0	0	0	0	0	0	0	0	0	0	0	0	0	0	0	0	0	0	0	0	0	0	0	0	0	0	0	0	0	0	0
		11:12	42.5	Non-Exposed	0	0	0	0	0	0	0	0	0	0	0	0	0	0	0	0	0	0	0	0	0	0	0	0	0	0	0	0	0	0	0	0	0	0	0	0	0	0	0	0	0	0
				Exposed	0	0	0	0	0	0	0	0	0	0	0	0	0	0	0	0	0	0	0	0	0	0	0	0	0	0	0	0	0	0	0	0	0	0	0	0	0	0	0	0	0	0
		12:12	45	Non-Exposed	51	51	51	51	51	51	51	51	51	51	51	51	51	51	51	51	51	51	51	51	51	51	51	51	51	51	51	51	51	51	50	50	50	50	50	50	49	49	48	48	48	45
				Exposed	51	51	51	51	51	51	51	51	51	51	51	51	51	51	51	51	51	51	51	51	51	51	51	51	51	50	51	51	47	50	50	0	50	47	0	49	0	0	0	0	0

Tamarack 2.3 Rail – Gable Flush-Mount on 30 Foot Maximum Mean Roof Height – Landscape – Panel Width = 45 Inches or Less

Ground Snow Load	Exposure Category	Roof Pitch	Roof Angle	Wind Speed (mph)	95			100			105			110			115			120			125			130			140			150			160			170			180			190		
				Roof Area	1	2	3	1	2	3	1	2	3	1	2	3	1	2	3	1	2	3	1	2	3	1	2	3	1	2	3	1	2	3	1	2	3	1	2	3	1	2	3	1	2	3
		Flat	0	Non-Exposed	40	45	40	40	45	40	40	45	40	40	45	40	40	45	40	40	45	40	40	45	40	40	45	40	40	45	40	40	45	40	40	45	40	40	45	40	40	45	40	40	45	40
				Exposed	40	45	40	40	45	40	40	45	40	40	45	40	40	45	40	40	45	40	40	45	40	40	45	40	40	45	40	40	45	40	40	45	40	40	45	40	40	45	40	40	45	0
		1:12	4.8	Non-Exposed	37	42	37	37	42	37	37	42	37	37	42	37	37	42	37	37	42	37	37	42	37	37	42	37	37	42	37	37	42	37	37	42	37	37	42	37	37	42	37	37	42	37
				Exposed	37	42	37	37	42	37	37	42	37	37	42	37	37	42	37	37	42	37	37	42	37	37	42	37	37	42	37	37	42	37	37	42	37	37	42	37	37	42	0	37	42	0
		2:12	9.5	Non-Exposed	35	40	35	35	40	35	35	40	35	35	40	35	35	40	35	35	40	35	35	40	35	35	40	35	35	40	35	35	40	35	35	40	35	35	40	35	35	40	35	35	40	35
				Exposed	35	40	35	35	40	35	35	40	35	35	40	35	35	40	35	35	40	35	35	40	35	35	40	35	35	40	35	35	40	35	35	40	35	35	40	35	35	40	0	35	0	0
		3:12	14.0	Non-Exposed	34	38	34	34	38	34	34	38	34	34	38	34	34	38	34	34	38	34	34	38	34	34	38	34	34	38	34	34	38	34	34	38	34	34	38	34	34	38	34	34	38	34
				Exposed	34	38	34	34	38	34	34	38	34	34	38	34	34	38	34	34	38	34	34	38	34	34	38	34	34	38	34	34	38	34	34	38	34	34	38	34	34	38	0	34	0	0
		4:12	18.4	Non-Exposed	0	0	0	0	0	0	0	0	0	0	0	0	0	0	0	0	0	0	0	0	0	0	0	0	0	0	0	0	0	0	0	0	0	0	0	0	0	0	0	0	0	0
				Exposed	0	0	0	0	0	0	0	0	0	0	0	0	0	0	0	0	0	0	0	0	0	0	0	0	0	0	0	0	0	0	0	0	0	0	0	0	0	0	0	0	0	0
		5:12	22.6	Non-Exposed	0	0	0	0	0	0	0	0	0	0	0	0	0	0	0	0	0	0	0	0	0	0	0	0	0	0	0	0	0	0	0	0	0	0	0	0	0	0	0	0	0	0
				Exposed	0	0	0	0	0	0	0	0	0	0	0	0	0	0	0	0	0	0	0	0	0	0	0	0	0	0	0	0	0	0	0	0	0	0	0	0	0	0	0	0	0	0
	B	6:12	26.6	Non-Exposed	0	0	0	0	0	0	0	0	0	0	0	0	0	0	0	0	0	0	0	0	0	0	0	0	0	0	0	0	0	0	0	0	0	0	0	0	0	0	0	0	0	0
				Exposed	0	0	0	0	0	0	0	0	0	0	0	0	0	0	0	0	0	0	0	0	0	0	0	0	0	0	0	0	0	0	0	0	0	0	0	0	0	0	0	0	0	0
		7:12	30.3	Non-Exposed	0	0	0	0	0	0	0	0	0	0	0	0	0	0	0	0	0	0	0	0	0	0	0	0	0	0	0	0	0	0	0	0	0	0	0	0	0	0	0	0	0	0
				Exposed	0	0	0	0	0	0	0	0	0	0	0	0	0	0	0	0	0	0	0	0	0	0	0	0	0	0	0	0	0	0	0	0	0	0	0	0	0	0	0	0	0	0
		8:12	33.7	Non-Exposed	0	0	0	0	0	0	0	0	0	0	0	0	0	0	0	0	0	0	0	0	0	0	0	0	0	0	0	0	0	0	0	0	0	0	0	0	0	0	0	0	0	0
				Exposed	0	0	0	0	0	0	0	0	0	0	0	0	0	0	0	0	0	0	0	0	0	0	0	0	0	0	0	0	0	0	0	0	0	0	0	0	0	0	0	0	0	0
		9:12	36.9	Non-Exposed	0	0	0	0	0	0	0	0	0	0	0	0	0	0	0	0	0	0	0	0	0	0	0	0	0	0	0	0	0	0	0	0	0	0	0	0	0	0	0	0	0	0
				Exposed	0	0	0	0	0	0	0	0	0	0	0	0	0	0	0	0	0	0	0	0	0	0	0	0	0	0	0	0	0	0	0	0	0	0	0	0	0	0	0	0	0	0
		10:12	39.8	Non-Exposed	0	0	0	0	0	0	0	0	0	0	0	0	0	0	0	0	0	0	0	0	0	0	0	0	0	0	0	0	0	0	0	0	0	0	0	0	0	0	0	0	0	0
				Exposed	0	0	0	0	0	0	0	0	0	0	0	0	0	0	0	0	0	0	0	0	0	0	0	0	0	0	0	0	0	0	0	0	0	0	0	0	0	0	0	0	0	0
		11:12	42.5	Non-Exposed	0	0	0	0	0	0	0	0	0	0	0	0	0	0	0	0	0	0	0	0	0	0	0	0	0	0	0	0	0	0	0	0	0	0	0	0	0	0	0	0	0	0
				Exposed	0	0	0	0	0	0	0	0	0	0	0	0	0	0	0	0	0	0	0	0	0	0	0	0	0	0	0	0	0	0	0	0	0	0	0	0	0	0	0	0	0	0
		12:12	45	Non-Exposed	0	0	0	0	0	0	0	0	0	0	0	0	0	0	0	0	0	0	0	0	0	0	0	0	0	0	0	0	0	0	0	0	0	0	0	0	0	0	0	0	0	0
				Exposed	0	0	0	0	0	0	0	0	0	0	0	0	0	0	0	0	0	0	0	0	0	0	0	0	0	0	0	0	0	0	0	0	0	0	0	0	0	0	0	0	0	0
		Flat	0	Non-Exposed	40	45	40	40	45	40	40	45	40	40	45	40	40	45	40	40	45	40	40	45	40	40	45	40	40	45	40	40	45	40	40	45	40	40	45	40	40	45	40	40	45	0
				Exposed	40	45	40	40	45	40	40	45	40	40	45	40	40	45	40	40	45	40	40	45	40	40	45	40	40	45	40	40	45	40	40	45	0	40	45	0	40	0	0	40	0	0
		1:12	4.8	Non-Exposed	37	42	37	37	42	37	37	42	37	37	42	37	37	42	37	37	42	37	37	42	37	37	42	37	37	42	37	37	42	37	37	42	37	37	42	37	37	42	37	37	42	0
				Exposed	37	42	37	37	42	37	37	42	37	37	42	37	37	42	37	37	42	37	37	42	37	37	42	37	37	42	37	37	42	0	37	42	0	37	0	0	37	0	0	37	0	0
		2:12	9.5	Non-Exposed	35	40	35	35	40	35	35	40	35	35	40	35	35	40	35	35	40	35	35	40	35	35	40	35	35	40	35	35	40	35	35	40	35	35	39	35	35	39	0	35	39	0
				Exposed	35	40	35	35	40	35	35	40	35	35	40	35	35	40	35	35	40	35	35	40	35	35	40	35	35	40	35	35	40	0	35	0	0	35	0	0	35	0	0	0	0	0
		3:12	14.0	Non-Exposed	34	38	34	34	38	34	34	38	34	34	38	34	34	38	34	34	38	34	34	38	34	34	38	34	34	38	34	34	38	34	34	38	34	34	38	34	34	38	0	34	37	0
				Exposed	34	38	34	34	38	34	34	38	34	34	38	34	34	38	34	34	38	34	34	38	34	34	38	34	34	38	34	34	38	0	34	0	0	34	0	0	34	0	0	0	0	0
		4:12	18.4	Non-Exposed	0	0	0	0	0	0	0	0	0	0	0	0	0	0	0	0	0	0	0	0	0	0	0	0	0	0	0	0	0	0	0	0	0	0	0	0	0	0	0	0	0	0
				Exposed	0	0	0	0	0	0	0	0	0	0	0	0	0	0	0	0	0	0	0	0	0	0	0	0	0	0	0	0	0	0	0	0	0	0	0	0	0	0	0	0	0	0
		5:12	22.6	Non-Exposed	0	0	0	0	0	0	0	0	0	0	0	0	0	0	0	0	0	0	0	0	0	0	0	0	0	0	0	0	0	0	0	0	0	0	0	0	0	0	0	0	0	0
				Exposed	0	0	0	0	0	0	0	0	0	0	0	0	0	0	0	0	0	0	0	0	0	0	0	0	0	0	0	0	0	0	0	0	0	0	0	0	0	0	0	0	0	0
120	C	6:12	26.6	Non-Exposed	0	0	0	0	0	0	0	0	0	0	0	0	0	0	0	0	0	0	0	0	0	0	0	0	0	0	0	0	0	0	0	0	0	0	0	0	0	0	0	0	0	0
				Exposed	0	0	0	0	0	0	0	0	0	0	0	0	0	0	0	0	0	0	0	0	0	0	0	0	0	0	0	0	0	0	0	0	0	0	0	0	0	0	0	0	0	0
		7:12	30.3	Non-Exposed	0	0	0	0	0	0	0	0	0	0	0	0	0	0	0	0	0	0	0	0	0	0	0	0	0	0	0	0	0	0	0	0	0	0	0	0	0	0	0	0	0	0
				Exposed	0	0	0	0	0	0	0	0	0	0	0	0	0	0	0	0	0	0	0	0	0	0	0	0	0	0	0	0	0	0	0	0	0	0	0	0	0	0	0	0	0	0
		8:12	33.7	Non-Exposed	0	0	0	0	0	0	0	0	0	0	0	0	0	0	0	0	0	0	0	0	0	0	0	0	0	0	0	0	0	0	0	0	0	0	0	0	0	0	0	0	0	0
				Exposed	0	0	0	0	0	0	0	0	0	0	0	0	0	0	0	0	0	0	0	0	0	0	0	0	0	0	0	0	0	0	0	0	0	0	0	0	0	0	0	0	0	0
		9:12	36.9	Non-Exposed	0	0	0	0	0	0	0	0	0	0	0	0	0	0	0	0	0	0	0	0	0	0	0	0	0	0	0	0	0	0	0	0	0	0	0	0	0	0	0	0	0	0
				Exposed	0	0	0	0	0	0	0	0	0	0	0	0	0	0	0	0	0	0	0	0	0	0	0	0	0	0	0	0	0	0	0	0	0	0	0	0	0	0	0	0	0	0
		10:12	39.8	Non-Exposed	0	0	0	0	0	0	0	0	0	0	0	0	0	0	0	0	0	0	0	0	0	0	0	0	0	0	0	0	0	0	0	0	0	0	0	0	0	0	0	0	0	0
				Exposed	0	0	0	0	0	0	0	0	0	0	0	0	0	0	0	0	0	0	0	0	0	0	0	0	0	0	0	0	0	0	0	0	0	0	0	0	0	0	0	0	0	0
		11:12	42.5	Non-Exposed	0	0	0	0	0	0	0	0	0	0	0	0	0	0	0	0	0	0	0	0	0	0	0	0	0	0	0	0	0	0	0	0	0	0	0	0	0	0	0	0	0	0
				Exposed	0	0	0	0	0	0	0	0	0	0	0	0	0	0	0	0	0	0	0	0	0	0	0	0	0	0	0	0	0	0	0	0	0	0	0	0	0	0	0	0	0	0
		12:12	45	Non-Exposed	0	0	0	0	0	0	0	0	0	0	0	0	0	0	0	0	0	0	0	0	0	0	0	0	0	0	0	0	0	0	0	0	0	0	0	0	0	0	0	0	0	0
				Exposed	0	0	0	0	0	0	0	0	0	0	0	0	0	0	0	0	0	0	0	0	0	0	0	0	0	0	0	0	0	0	0	0	0	0	0	0	0	0	0	0	0	0
		Flat	0	Non-Exposed	40	45	40	40	45	40	40	45	40	40	45	40	40	45	40	40	45	40	40	45	40	40	45	40	40	45	40	40	45	40	40	45	40	40	45	0	40	45	0	40	45	0
				Exposed	40	45	40	40	45	40	40	45	40	40	45	40	40	45	40	40	45	40	40	45	40	40	45	40	40	45	0	40	45	0	40	45	0	40	0	0	40	0	0	40	0	0
		1:12	4.8	Non-Exposed	37	42	37	37	42	37	37	42	37	37	42	37	37	42	37	37	42	37	37	42	37	37	42	37	37	42	37	37	42	37	37	42	37	37	42	37	37	42	0	37	42	0
				Exposed	37	42	37	37	42	37	37	42	37	37	42	37	37	42	37	37	42	37	37	42	37	37	42	37	37	42	0	37	42	0	37	42	0	37	0	0	37	0	0	0	0	0
		2:12	9.5	Non-Exposed	35	40	35	35	40	35	35	40	35	35	40	35	35	40	35	35	40	35	35	40	35	35	40	35	35	40	35	35	39	35	35	39	35	35	39	0	35	0	0	35	0	0
				Exposed	35	40	35	35	40	35	35	40	35	35	40	35	35	40	35	35	40	35	35	40	35	35	40	35	35	40	0	35	0	0	35	0	0	35	0	0	0	0	0	0	0	0
		3:12	14.0	Non-Exposed	34	38	34	34	38	34	34	38	34	34	38	34	34	38	34	34	38	34	34	38	34	34	38	34	34	38	34	34	38	34	34	38	34	34	38	0	34	0	0	34	0	0
				Exposed	34	38	34	34	38	34	34	38	34	34	38	34	34	38	34	34	38	34	34	38	34	34	38	34	34	38	0	34	0	0	34	0	0	34	0	0	0	0	0	0	0	0
		4:12	18.4	Non-Exposed	0	0	0	0	0	0	0	0	0	0	0	0	0	0	0	0	0	0	0	0	0	0	0	0	0	0	0	0	0	0	0	0	0	0	0	0	0	0	0	0	0	0
				Exposed	0	0	0	0	0	0	0	0	0	0	0	0	0	0	0	0	0	0	0	0	0	0	0	0	0	0	0	0	0	0	0	0	0	0	0	0	0	0	0	0	0	0
		5:12	22.6	Non-Exposed	0	0	0	0	0	0	0	0	0	0	0	0	0	0	0	0	0	0	0	0	0	0	0	0	0	0	0	0	0	0	0	0	0	0	0	0	0	0	0	0	0	0
				Exposed	0	0	0	0	0	0	0	0	0	0	0	0	0	0	0	0	0	0	0	0	0	0	0	0	0	0	0	0	0	0	0	0	0	0	0	0	0	0	0	0	0	0
	D	6:12	26.6	Non-Exposed	0	0	0	0	0	0	0	0	0	0	0	0	0	0	0	0	0	0	0	0	0	0	0	0	0	0	0	0	0	0	0	0	0	0	0	0	0	0	0	0	0	0
				Exposed	0	0	0	0	0	0	0	0	0	0	0	0	0	0	0	0	0	0	0	0	0	0	0	0	0	0	0	0	0	0	0	0	0	0	0	0	0	0	0	0	0	0
		7:12	30.3	Non-Exposed	0	0	0	0	0	0	0	0	0	0	0	0	0	0	0	0	0	0	0	0	0	0	0	0	0	0	0	0	0	0	0	0	0	0	0	0	0	0	0	0	0	0
				Exposed	0	0	0	0	0	0	0	0	0	0	0	0	0	0	0	0	0	0	0	0	0	0	0	0	0	0	0	0	0	0	0	0	0	0	0	0	0	0	0	0	0	0
		8:12	33.7	Non-Exposed	0	0	0	0	0	0	0	0	0	0	0	0	0	0	0	0	0	0	0	0	0	0	0	0	0	0	0	0	0	0	0	0	0	0	0	0	0	0	0	0	0	0
				Exposed	0	0	0	0	0	0	0	0	0	0	0	0	0	0	0	0	0	0	0	0	0	0	0	0	0	0	0	0	0	0	0	0	0	0	0	0	0	0	0	0	0	0
		9:12	36.9	Non-Exposed	0	0	0	0	0	0	0	0	0	0	0	0	0	0	0	0	0	0	0	0	0	0	0	0	0	0	0	0	0	0	0	0	0	0	0	0	0	0	0	0	0	0
				Exposed	0	0	0	0	0	0	0	0	0	0	0	0	0	0	0	0	0	0	0	0	0	0	0	0	0	0	0	0	0	0	0	0	0	0	0	0	0	0	0	0	0	0
		10:12	39.8	Non-Exposed	0	0	0	0	0	0	0	0	0	0	0	0	0	0	0	0	0	0	0	0	0	0	0	0	0	0	0	0	0	0	0	0	0	0	0	0	0	0	0	0	0	0
				Exposed	0	0	0	0	0	0	0	0	0	0	0	0	0	0	0	0	0	0	0	0	0	0	0	0	0	0	0	0	0	0	0	0	0	0	0	0	0	0	0	0	0	0
		11:12	42.5	Non-Exposed	0	0	0	0	0	0	0	0	0	0	0	0	0	0	0	0	0	0	0	0	0	0	0	0	0	0	0	0	0	0	0	0	0	0	0	0	0	0	0	0	0	0
				Exposed	0	0	0	0	0	0	0	0	0	0	0	0	0	0	0	0	0	0	0	0	0	0	0	0	0	0	0	0	0	0	0	0	0	0	0	0	0	0	0	0	0	0
		12:12	45	Non-Exposed	0	0	0	0	0	0	0	0	0	0	0	0	0	0	0	0	0	0	0	0	0	0	0	0	0	0	0	0	0	0	0	0	0	0	0	0	0	0	0	0	0	0
				Exposed	0	0	0	0	0	0	0	0	0	0	0	0	0	0	0	0	0	0	0	0	0	0	0	0	0	0	0	0	0	0	0	0	0	0	0	0	0	0	0	0	0	0

Tamarack 2.3 Rail – Hip Flush-Mount on 30 Foot Maximum Mean Roof Height – Landscape – Panel Width = 45 Inches or Less

Ground Snow Load	Exposure Category	Roof Pitch	Roof Angle	Wind Speed (mph)	95			100			105			110			115			120			125			130			140			150			160			170			180			190		
				Roof Area	1	2	3	1	2	3	1	2	3	1	2	3	1	2	3	1	2	3	1	2	3	1	2	3	1	2	3	1	2	3	1	2	3	1	2	3	1	2	3	1	2	3
0	B	2:12	9.5	Non-Exposed	96	96	96	96	96	96	96	96	96	96	96	96	96	96	96	96	96	96	96	96	96	96	96	95	96	90	86	96	83	79	89	76	73	83	71	67	77	66	63	73	62	60
				Exposed	96	96	96	96	96	96	96	96	96	96	95	90	96	90	85	96	85	81	93	81	77	89	77	73	82	70	67	76	64	62	70	60	58	66	56	54	62	53	51	58	50	48
		3:12	14.0	Non-Exposed	96	96	96	96	96	96	96	96	96	96	96	96	96	96	96	96	96	96	96	96	96	96	96	94	96	90	86	95	82	78	88	76	72	82	71	67	77	66	63	73	62	59
				Exposed	96	96	96	96	96	96	96	96	95	96	94	90	96	89	85	96	85	81	93	80	77	89	77	73	82	70	67	75	64	61	70	60	58	65	56	54	62	53	51	58	50	48
		4:12	18.4	Non-Exposed	96	96	96	96	96	96	96	96	96	96	96	96	96	96	96	96	96	96	96	96	96	96	96	93	96	89	85	94	82	78	88	76	72	82	70	67	77	66	63	72	62	59
				Exposed	96	96	96	96	96	96	96	96	95	96	94	89	96	89	84	96	84	80	92	80	76	88	76	73	81	70	66	75	64	61	70	60	57	65	56	54	61	53	51	58	50	48
		5:12	22.6	Non-Exposed	96	96		96	96		96	96		96	96		96	96		96	96		96	96		96	96		96	96		96	92		96	85		96	79		92	73		86	69	
				Exposed	96	96		96	96		96	96		96	96		96	96		96	94		96	89		96	85		96	78		89	71		82	66		76	62		71	58		67	55	
		6:12	26.6	Non-Exposed	96	96		96	96		96	96		96	96		96	96		96	96		96	96		96	96		96	96		96	91		96	84		96	78		91	73		85	68	
				Exposed	96	96		96	96		96	96		96	96		96	96		96	94		96	89		96	85		96	77		89	71		82	66		76	61		71	58		66	55	
		7:12	30.3	Non-Exposed	96	96	96	96	96	96	96	96	96	96	96	96	96	96	96	96	96	96	96	96	96	96	96	93	96	87	84	96	79	76	96	73	69	93	67	63	87	63	59	81	59	55
				Exposed	96	96	96	96	96	96	96	96	95	96	91	89	96	86	83	96	81	78	96	77	74	96	73	70	92	67	63	85	61	58	78	57	53	73	53	49	68	50	46	63	47	43
		8:12	33.7	Non-Exposed	96	96	96	96	96	96	96	96	96	96	96	96	96	96	96	96	96	96	96	96	96	96	95	93	96	86	83	96	79	75	96	73	69	93	67	63	86	63	59	81	59	55
				Exposed	96	96	96	96	96	96	96	96	94	96	91	88	96	86	83	96	81	78	96	77	73	96	73	69	92	66	63	84	61	57	78	57	53	72	53	49	68	50	46	63	47	43
		9:12	36.9	Non-Exposed	96	96	96	96	96	96	96	96	96	96	96	96	96	96	96	96	96	96	96	96	96	96	95	92	96	86	83	96	79	75	96	72	69	92	67	63	86	62	59	81	59	55
				Exposed	96	96	96	96	96	96	96	96	94	96	90	88	96	85	82	96	81	77	96	77	73	96	73	69	91	66	62	84	61	57	78	57	53	72	53	49	67	49	46	63	47	43
		10:12	39.8	Non-Exposed	96	96	96	96	96	96	96	96	96	96	96	96	96	96	96	96	96	96	96	96	96	96	94	92	96	86	83	96	78	75	96	72	68	92	67	63	86	62	59	80	59	55
				Exposed	96	96	96	96	96	96	96	95	93	96	90	87	96	85	82	96	81	77	96	76	73	96	73	69	91	66	62	84	61	57	78	57	53	72	53	49	67	49	46	63	46	43
		11:12	42.5	Non-Exposed	96	96	96	96	96	96	96	96	96	96	96	96	96	96	96	96	96	96	96	96	96	96	94	92	96	85	82	96	78	75	96	72	68	92	67	63	86	62	59	80	59	55
				Exposed	96	96	96	96	96	96	96	95	93	96	90	87	96	85	82	96	80	77	96	76	73	96	73	69	91	66	62	84	61	57	77	56	53	72	53	49	67	49	46	63	46	43
		12:12	45	Non-Exposed	96	96	96	96	96	96	96	96	96	96	96	96	96	96	96	96	96	96	96	96	96	96	93	91	96	85	82	96	78	75	96	72	68	91	67	63	85	62	59	80	58	55
				Exposed	96	96	96	96	96	96	96	95	93	96	89	87	96	84	81	96	80	77	96	76	72	96	72	69	90	66	62	83	61	57	77	56	53	72	53	49	67	49	46	63	46	43
	C	2:12	9.5	Non-Exposed	96	96	96	96	96	96	96	96	96	96	96	94	96	94	89	96	89	84	96	84	80	93	80	76	85	73	70	79	67	64	73	62	60	68	58	56	64	55	53	60	52	50
				Exposed	96	92	88	96	87	82	94	81	77	89	77	73	84	73	69	80	69	66	77	65	62	73	63	60	68	58	56	63	54	52	59	51	48	55	47	0	52	0	0	49	0	0
		3:12	14.0	Non-Exposed	96	96	96	96	96	96	96	96	96	96	96	94	96	93	89	96	88	84	96	84	80	92	80	76	85	73	69	78	67	64	73	62	60	68	58	56	64	55	53	60	52	50
				Exposed	96	92	87	96	86	82	93	81	77	88	76	73	84	72	69	80	69	65	77	65	62	73	62	60	67	58	56	62	54	52	58	50	48	55	47	0	52	0	0	49	0	0
		4:12	18.4	Non-Exposed	96	96	96	96	96	96	96	96	96	96	96	93	96	93	88	96	88	84	96	83	79	92	80	76	84	73	69	78	67	64	73	62	59	68	58	56	64	55	53	60	52	50
				Exposed	96	91	87	96	86	81	93	81	77	88	76	72	84	72	69	80	68	65	76	65	62	73	62	60	67	58	55	62	54	52	58	50	48	55	47	0	52	0	0	49	0	0
		5:12	22.6	Non-Exposed	96	96		96	96		96	96		96	96		96	96		96	96		96	93		96	89		96	81		93	74		86	69		80	64		74	60		69	57	
				Exposed	96	96		96	96		96	90		96	85		96	80		96	76		91	73		87	69		79	63		72	59		67	55		62	52		59	49		56	46	
		6:12	26.6	Non-Exposed	96	96		96	96		96	96		96	96		96	96		96	96		96	93		96	88		96	81		93	74		86	69		79	64		74	60		69	57	
				Exposed	96	96		96	95		96	90		96	85		96	80		95	76		90	72		86	69		79	63		72	59		67	55		62	52		59	49		55	46	
		7:12	30.3	Non-Exposed	96	96	96	96	96	96	96	96	96	96	95	93	96	90	87	96	85	82	96	81	77	96	77	73	96	70	66	88	64	60	82	59	55	76	55	51	71	52	48	66	48	45
				Exposed	96	89	86	96	83	80	96	78	74	96	73	69	95	69	65	91	65	62	86	62	59	82	59	56	75	55	51	69	50	47	64	47	43	60	44	0	56	0	0	53	0	0
		8:12	33.7	Non-Exposed	96	96	96	96	96	96	96	96	96	96	95	93	96	90	87	96	85	82	96	80	77	96	76	73	96	69	66	88	64	60	81	59	55	75	55	51	70	52	48	66	48	45
				Exposed	96	88	85	96	82	79	96	77	74	96	73	69	95	69	65	90	65	61	86	62	58	82	59	56	75	54	51	69	50	47	64	47	43	60	44	0	56	0	0	53	0	0
		9:12	36.9	Non-Exposed	96	96	96	96	96	96	96	96	96	96	94	92	96	89	86	96	84	81	96	80	77	96	76	73	95	69	65	88	63	60	81	59	55	75	55	51	70	51	48	66	48	45
				Exposed	96	88	85	96	82	79	96	77	74	96	73	69	94	69	65	90	65	61	85	62	58	81	59	56	74	54	51	69	50	47	63	47	43	60	44	0	56	0	0	53	0	0
		10:12	39.8	Non-Exposed	96	96	96	96	96	96	96	96	96	96	94	92	96	89	86	96	84	81	96	80	76	96	76	72	95	69	65	87	63	60	81	59	55	75	55	51	70	51	48	66	48	45
				Exposed	96	87	85	96	82	79	96	77	73	96	73	69	94	69	65	89	65	61	85	62	58	81	59	55	74	54	51	68	50	47	63	47	43	60	44	0	56	0	0	53	0	0
		11:12	42.5	Non-Exposed	96	96	96	96	96	96	96	96	96	96	94	91	96	88	86	96	84	81	96	80	76	96	76	72	94	69	65	87	63	60	80	59	55	75	55	51	70	51	48	66	48	45
				Exposed	96	87	84	96	82	78	96	77	73	96	72	69	94	68	65	89	65	61	85	62	58	81	59	55	74	54	51	68	50	46	63	47	43	59	44	0	56	0	0	53	0	0
		12:12	45	Non-Exposed	96	96	96	96	96	96	96	96	96	96	93	91	96	88	85	96	84	80	96	79	76	96	76	72	94	69	65	87	63	59	80	59	55	75	55	51	70	51	48	65	48	45
				Exposed	96	87	84	96	81	78	96	77	73	96	72	68	93	68	64	89	65	61	85	62	58	81	59	55	74	54	51	68	50	46	63	47	43	59	43	0	56	0	0	53	0	0
	D	2:12	9.5	Non-Exposed	96	96	96	96	96	96	96	95	90	96	89	85	96	84	80	92	80	76	88	76	72	84	72	69	77	66	63	71	61	59	66	57	55	62	54	51	59	51	49	55	48	0
				Exposed	96	83	79	90	78	74	85	73	70	81	69	66	77	65	62	73	62	60	70	60	57	67	57	55	62	53	51	57	50	48	54	46	0	50	0	0	48	0	0	0	0	0
		3:12	14.0	Non-Exposed	96	96	96	96	96	95	96	94	89	96	89	84	96	84	80	92	79	76	88	76	72	84	72	69	77	66	63	71	61	58	66	57	55	62	54	51	58	50	48	55	48	0
				Exposed	95	83	79	90	77	74	85	73	69	80	69	66	76	65	62	73	62	60	70	60	57	67	57	55	61	53	51	57	49	47	54	46	0	50	0	0	0	0	0	0	0	0
		4:12	18.4	Non-Exposed	96	96	96	96	96	94	96	93	89	96	88	84	96	83	79	91	79	75	87	75	72	83	72	68	77	65	63	71	61	58	66	57	55	62	53	51	58	50	48	55	48	0
				Exposed	95	82	78	89	77	73	84	73	69	80	69	65	76	65	62	73	62	60	69	59	57	66	57	55	61	53	51	57	49	47	54	46	0	50	0	0	0	0	0	0	0	0
		5:12	22.6	Non-Exposed	96	96		96	96		96	96		96	96		96	93		96	88		96	84		96	80		92	73		84	67		77	62		72	59		67	55		63	52	
				Exposed	96	92		96	86		96	81		96	77		91	73		86	69		82	65		78	63		71	58		65	54		61	51		57	48		54	0		51	0	
		6:12	26.6	Non-Exposed	96	96		96	96		96	96		96	96		96	93		96	88		96	84		96	80		91	73		84	67		77	62		72	58		67	55		63	52	
				Exposed	96	91		96	86		96	81		96	76		90	72		86	69		81	65		78	62		71	58		65	54		61	51		57	48		54	0		51	0	
		7:12	30.3	Non-Exposed	96	96	96	96	96	95	96	91	88	96	85	82	96	81	77	96	76	73	96	72	68	95	69	65	87	63	59	80	58	54	74	54	50	68	50	46	64	47	43	60	44	40
				Exposed	96	79	76	96	74	70	96	70	66	91	66	62	86	62	58	82	59	55	78	56	53	74	54	50	68	50	46	62	46	42	58	0	0	55	0	0	52	0	0	49	0	0
		8:12	33.7	Non-Exposed	96	96	96	96	96	94	96	90	88	96	85	82	96	80	77	96	76	72	96	72	68	94	69	65	86	62	59	79	58	54	73	54	50	68	50	46	64	47	43	60	44	40
				Exposed	96	79	76	96	74	70	96	70	66	90	65	62	86	62	58	81	59	55	77	56	53	74	54	50	67	49	46	62	46	42	58	0	0	55	0	0	52	0	0	49	0	0
		9:12	36.9	Non-Exposed	96	96	96	96	96	94	96	90	87	96	85	82	96	80	77	96	76	72	96	72	68	94	68	64	86	62	59	79	58	54	73	53	50	68	50	46	63	47	43	60	44	0
				Exposed	96	79	75	96	74	70	95	69	65	90	65	62	85	62	58	81	59	55	77	56	53	74	54	50	67	49	46	62	46	42	58	0	0	55	0	0	52	0	0	49	0	0
		10:12	39.8	Non-Exposed	96	96	96	96	95	93	96	90	87	96	84	81	96	80	76	96	76	72	96	72	68	94	68	64	86	62	59	79	58	54	73	53	50	68	50	46	63	47	43	60	44	0
				Exposed	96	79	75	96	74	70	95	69	65	90	65	61	85	62	58	81	59	55	77	56	52	73	54	50	67	49	46	62	46	42	58	0	0	55	0	0	52	0	0	49	0	0
		11:12	42.5	Non-Exposed	96	96	96	96	95	93	96	89	87	96	84	81	96	80	76	96	75	72	96	72	68	93	68	64	85	62	58	79	57	54	73	53	50	68	50	46	63	47	43	60	44	0
				Exposed	96	78	75	96	73	70	94	69	65	89	65	61	85	62	58	81	59	55	77	56	52	73	54	50	67	49	46	62	46	42	58	0	0	55	0	0	52	0	0	49	0	0
		12:12	45	Non-Exposed	96	96	96	96	95	92	96	89	86	96	84	81	96	79	76	96	75	72	96	71	68	93	68	64	85	62	58	78	57	54	73	53	50	68	50	46	63	47	43	60	44	0
				Exposed	96	78	75	96	73	70	94	69	65	89	65	61	85	62	58	80	59	55	77	56	52	73	54	50	67	49	46	62	46	42	58	0	0	55	0	0	52	0	0	49	0	0

Tamarack 2.3 Rail – Hip Flush-Mount on 30 Foot Maximum Mean Roof Height – Landscape – Panel Width = 45 Inches or Less

Ground Snow Load	Exposure Category	Roof Pitch	Roof Angle	Wind Speed (mph)	95			100			105			110			115			120			125			130			140			150			160			170			180			190		
				Roof Area	1	2	3	1	2	3	1	2	3	1	2	3	1	2	3	1	2	3	1	2	3	1	2	3	1	2	3	1	2	3	1	2	3	1	2	3	1	2	3	1	2	3
5	B	2:12	9.5	Non-Exposed	96	96	96	96	96	96	96	96	96	96	96	96	96	96	96	96	96	96	96	96	96	96	96	95	96	90	86	96	83	79	89	76	73	83	71	67	77	66	63	73	62	60
				Exposed	96	96	96	96	96	96	96	96	96	96	95	90	96	90	85	96	85	81	93	81	77	89	77	73	82	70	67	76	64	62	70	60	58	66	56	54	62	53	51	58	50	48
		3:12	14.0	Non-Exposed	96	96	96	96	96	96	96	96	96	96	96	96	96	96	96	96	96	96	96	96	96	96	96	94	96	90	86	95	82	78	88	76	72	82	71	67	77	66	63	73	62	59
				Exposed	96	96	96	96	96	96	96	96	95	96	94	90	96	89	85	96	85	81	93	80	77	89	77	73	82	70	67	75	64	61	70	60	58	65	56	54	62	53	51	58	50	48
		4:12	18.4	Non-Exposed	96	96	96	96	96	96	96	96	96	96	96	96	96	96	96	96	96	96	96	96	96	96	96	93	96	89	85	94	82	78	88	76	72	82	70	67	77	66	63	72	62	59
				Exposed	96	96	96	96	96	96	96	96	95	96	94	89	96	89	84	96	84	80	92	80	76	88	76	73	81	70	66	75	64	61	70	60	57	65	56	54	61	53	51	58	50	48
		5:12	22.6	Non-Exposed	96	96		96	96		96	96		96	96		96	96		96	96		96	96		96	96		96	96		96	92		96	85		96	79		92	73		86	69	
				Exposed	96	96		96	96		96	96		96	96		96	96		96	94		96	89		96	85		96	78		89	71		82	66		76	62		71	58		67	55	
		6:12	26.6	Non-Exposed	96	96		96	96		96	96		96	96		96	96		96	96		96	96		96	96		96	96		96	91		96	84		96	78		91	73		85	68	
				Exposed	96	96		96	96		96	96		96	96		96	96		96	94		96	89		96	85		96	77		89	71		82	66		76	61		71	58		66	55	
		7:12	30.3	Non-Exposed	96	96	96	96	96	96	96	96	96	96	96	96	96	96	96	96	96	96	96	96	96	96	96	93	96	87	84	96	79	76	96	73	69	93	67	63	87	63	59	81	59	55
				Exposed	96	96	96	96	96	96	96	96	95	96	91	89	96	86	83	96	81	78	96	77	74	96	73	70	92	67	63	85	61	58	78	57	53	73	53	49	68	50	46	63	47	43
		8:12	33.7	Non-Exposed	96	96	96	96	96	96	96	96	96	96	96	96	96	96	96	96	96	96	96	96	96	96	95	93	96	86	83	96	79	75	96	73	69	93	67	63	86	63	59	81	59	55
				Exposed	96	96	96	96	96	96	96	96	94	96	91	88	96	86	83	96	81	78	96	77	73	96	73	69	92	66	63	84	61	57	78	57	53	72	53	49	68	50	46	63	47	43
		9:12	36.9	Non-Exposed	96	96	96	96	96	96	96	96	96	96	96	96	96	96	96	96	96	96	96	96	96	96	95	92	96	86	83	96	79	75	96	72	69	92	67	63	86	62	59	81	59	55
				Exposed	96	96	96	96	96	96	96	96	94	96	90	88	96	85	82	96	81	77	96	77	73	96	73	69	91	66	62	84	61	57	78	57	53	72	53	49	67	49	46	63	47	43
		10:12	39.8	Non-Exposed	96	96	96	96	96	96	96	96	96	96	96	96	96	96	96	96	96	96	96	96	96	96	94	92	96	86	83	96	78	75	96	72	68	92	67	63	86	62	59	80	59	55
				Exposed	96	96	96	96	96	96	96	95	93	96	90	87	96	85	82	96	81	77	96	76	73	96	73	69	91	66	62	84	61	57	78	57	53	72	53	49	67	49	46	63	46	43
		11:12	42.5	Non-Exposed	96	96	96	96	96	96	96	96	96	96	96	96	96	96	96	96	96	96	96	96	96	96	94	92	96	85	82	96	78	75	96	72	68	92	67	63	86	62	59	80	59	55
				Exposed	96	96	96	96	96	96	96	95	93	96	90	87	96	85	82	96	80	77	96	76	73	96	73	69	91	66	62	84	61	57	77	56	53	72	53	49	67	49	46	63	46	43
		12:12	45	Non-Exposed	96	96	96	96	96	96	96	96	96	96	96	96	96	96	96	96	96	96	96	96	96	96	93	91	96	85	82	96	78	75	96	72	68	91	67	63	85	62	59	80	58	55
				Exposed	96	96	96	96	96	96	96	95	93	96	89	87	96	84	81	96	80	77	96	76	72	96	72	69	90	66	62	83	61	57	77	56	53	72	53	49	67	49	46	63	46	43
	C	2:12	9.5	Non-Exposed	96	96	96	96	96	96	96	96	96	96	96	94	96	94	89	96	89	84	96	84	80	93	80	76	85	73	70	79	67	64	73	62	60	68	58	56	64	55	53	60	52	50
				Exposed	96	92	88	96	87	82	94	81	77	89	77	73	84	73	69	80	69	66	77	65	62	73	63	60	68	58	56	63	54	52	59	51	48	55	47	0	52	0	0	49	0	0
		3:12	14.0	Non-Exposed	96	96	96	96	96	96	96	96	96	96	96	94	96	93	89	96	88	84	96	84	80	92	80	76	85	73	69	78	67	64	73	62	60	68	58	56	64	55	53	60	52	50
				Exposed	96	92	87	96	86	82	93	81	77	88	76	73	84	72	69	80	69	65	77	65	62	73	62	60	67	58	56	62	54	52	58	50	48	55	47	0	52	0	0	49	0	0
		4:12	18.4	Non-Exposed	96	96	96	96	96	96	96	96	96	96	96	93	96	93	88	96	88	84	96	83	79	92	80	76	84	73	69	78	67	64	73	62	59	68	58	56	64	55	53	60	52	50
				Exposed	96	91	87	96	86	81	93	81	77	88	76	72	84	72	69	80	68	65	76	65	62	73	62	60	67	58	55	62	54	52	58	50	48	55	47	0	52	0	0	49	0	0
		5:12	22.6	Non-Exposed	96	96		96	96		96	96		96	96		96	96		96	96		96	93		96	89		96	81		93	74		86	69		80	64		74	60		69	57	
				Exposed	96	96		96	96		96	90		96	85		96	80		96	76		91	73		87	69		79	63		72	59		67	55		62	52		59	49		56	46	
		6:12	26.6	Non-Exposed	96	96		96	96		96	96		96	96		96	96		96	96		96	93		96	88		96	81		93	74		86	69		79	64		74	60		69	57	
				Exposed	96	96		96	95		96	90		96	85		96	80		95	76		90	72		86	69		79	63		72	59		67	55		62	52		59	49		55	46	
		7:12	30.3	Non-Exposed	96	96	96	96	96	96	96	96	96	96	95	93	96	90	87	96	85	82	96	81	77	96	77	73	96	70	66	88	64	60	82	59	55	76	55	51	71	52	48	66	48	45
				Exposed	96	89	86	96	83	80	96	78	74	96	73	69	95	69	65	91	65	62	86	62	59	82	59	56	75	55	51	69	50	47	64	47	43	60	44	0	56	0	0	53	0	0
		8:12	33.7	Non-Exposed	96	96	96	96	96	96	96	96	96	96	95	93	96	90	87	96	85	82	96	80	77	96	76	73	96	69	66	88	64	60	81	59	55	75	55	51	70	52	48	66	48	45
				Exposed	96	88	85	96	82	79	96	77	74	96	73	69	95	69	65	90	65	61	86	62	58	82	59	56	75	54	51	69	50	47	64	47	43	60	44	0	56	0	0	53	0	0
		9:12	36.9	Non-Exposed	96	96	96	96	96	96	96	96	96	96	94	92	96	89	86	96	84	81	96	80	77	96	76	73	95	69	65	88	63	60	81	59	55	75	55	51	70	51	48	66	48	45
				Exposed	96	88	85	96	82	79	96	77	74	96	73	69	94	69	65	90	65	61	85	62	58	81	59	56	74	54	51	69	50	47	63	47	43	60	44	0	56	0	0	53	0	0
		10:12	39.8	Non-Exposed	96	96	96	96	96	96	96	96	96	96	94	92	96	89	86	96	84	81	96	80	76	96	76	72	95	69	65	87	63	60	81	59	55	75	55	51	70	51	48	66	48	45
				Exposed	96	87	85	96	82	79	96	77	73	96	73	69	94	69	65	89	65	61	85	62	58	81	59	55	74	54	51	68	50	47	63	47	43	60	44	0	56	0	0	53	0	0
		11:12	42.5	Non-Exposed	96	96	96	96	96	96	96	96	96	96	94	91	96	88	86	96	84	81	96	80	76	96	76	72	94	69	65	87	63	60	80	59	55	75	55	51	70	51	48	66	48	45
				Exposed	96	87	84	96	82	78	96	77	73	96	72	69	94	68	65	89	65	61	85	62	58	81	59	55	74	54	51	68	50	46	63	47	43	59	44	0	56	0	0	53	0	0
		12:12	45	Non-Exposed	96	96	96	96	96	96	96	96	96	96	93	91	96	88	85	96	84	80	96	79	76	96	76	72	94	69	65	87	63	59	80	59	55	75	55	51	70	51	48	65	48	45
				Exposed	96	87	84	96	81	78	96	77	73	96	72	68	93	68	64	89	65	61	85	62	58	81	59	55	74	54	51	68	50	46	63	47	43	59	43	0	56	0	0	53	0	0
	D	2:12	9.5	Non-Exposed	96	96	96	96	96	96	96	95	90	96	89	85	96	84	80	92	80	76	88	76	72	84	72	69	77	66	63	71	61	59	66	57	55	62	54	51	59	51	49	55	48	0
				Exposed	96	83	79	90	78	74	85	73	70	81	69	66	77	65	62	73	62	60	70	60	57	67	57	55	62	53	51	57	50	48	54	46	0	50	0	0	48	0	0	0	0	0
		3:12	14.0	Non-Exposed	96	96	96	96	96	95	96	94	89	96	89	84	96	84	80	92	79	76	88	76	72	84	72	69	77	66	63	71	61	58	66	57	55	62	54	51	58	50	48	55	48	0
				Exposed	95	83	79	90	77	74	85	73	69	80	69	66	76	65	62	73	62	60	70	60	57	67	57	55	61	53	51	57	49	47	54	46	0	50	0	0	0	0	0	0	0	0
		4:12	18.4	Non-Exposed	96	96	96	96	96	94	96	93	89	96	88	84	96	83	79	91	79	75	87	75	72	83	72	68	77	65	63	71	61	58	66	57	55	62	53	51	58	50	48	55	48	0
				Exposed	95	82	78	89	77	73	84	73	69	80	69	65	76	65	62	73	62	60	69	59	57	66	57	55	61	53	51	57	49	47	54	46	0	50	0	0	0	0	0	0	0	0
		5:12	22.6	Non-Exposed	96	96		96	96		96	96		96	96		96	93		96	88		96	84		96	80		92	73		84	67		77	62		72	59		67	55		63	52	
				Exposed	96	92		96	86		96	81		96	77		91	73		86	69		82	65		78	63		71	58		65	54		61	51		57	48		54	0		51	0	
		6:12	26.6	Non-Exposed	96	96		96	96		96	96		96	96		96	93		96	88		96	84		96	80		91	73		84	67		77	62		72	58		67	55		63	52	
				Exposed	96	91		96	86		96	81		96	76		90	72		86	69		81	65		78	62		71	58		65	54		61	51		57	48		54	0		51	0	
		7:12	30.3	Non-Exposed	96	96	96	96	96	95	96	91	88	96	85	82	96	81	77	96	76	73	96	72	68	95	69	65	87	63	59	80	58	54	74	54	50	68	50	46	64	47	43	60	44	40
				Exposed	96	79	76	96	74	70	96	70	66	91	66	62	86	62	58	82	59	55	78	56	53	74	54	50	68	50	46	62	46	42	58	0	0	55	0	0	52	0	0	49	0	0
		8:12	33.7	Non-Exposed	96	96	96	96	96	94	96	90	88	96	85	82	96	80	77	96	76	72	96	72	68	94	69	65	86	62	59	79	58	54	73	54	50	68	50	46	64	47	43	60	44	40
				Exposed	96	79	76	96	74	70	96	70	66	90	65	62	86	62	58	81	59	55	77	56	53	74	54	50	67	49	46	62	46	42	58	0	0	55	0	0	52	0	0	49	0	0
		9:12	36.9	Non-Exposed	96	96	96	96	96	94	96	90	87	96	85	82	96	80	77	96	76	72	96	72	68	94	68	64	86	62	59	79	58	54	73	53	50	68	50	46	63	47	43	60	44	0
				Exposed	96	79	75	96	74	70	95	69	65	90	65	62	85	62	58	81	59	55	77	56	53	74	54	50	67	49	46	62	46	42	58	0	0	55	0	0	52	0	0	49	0	0
		10:12	39.8	Non-Exposed	96	96	96	96	95	93	96	90	87	96	84	81	96	80	76	96	76	72	96	72	68	94	68	64	86	62	59	79	58	54	73	53	50	68	50	46	63	47	43	60	44	0
				Exposed	96	79	75	96	74	70	95	69	65	90	65	61	85	62	58	81	59	55	77	56	52	73	54	50	67	49	46	62	46	42	58	0	0	55	0	0	52	0	0	49	0	0
		11:12	42.5	Non-Exposed	96	96	96	96	95	93	96	89	87	96	84	81	96	80	76	96	75	72	96	72	68	93	68	64	85	62	58	79	57	54	73	53	50	68	50	46	63	47	43	60	44	0
				Exposed	96	78	75	96	73	70	94	69	65	89	65	61	85	62	58	81	59	55	77	56	52	73	54	50	67	49	46	62	46	42	58	0	0	55	0	0	52	0	0	49	0	0
		12:12	45	Non-Exposed	96	96	96	96	95	92	96	89	86	96	84	81	96	79	76	96	75	72	96	71	68	93	68	64	85	62	58	78	57	54	73	53	50	68	50	46	63	47	43	60	44	0
				Exposed	96	78	75	96	73	70	94	69	65	89	65	61	85	62	58	80	59	55	77	56	52	73	54	50	67	49	46	62	46	42	58	0	0	55	0	0	52	0	0	49	0	0

Tamarack 2.3 Rail – Hip Flush-Mount on 30 Foot Maximum Mean Roof Height – Landscape – Panel Width = 45 Inches or Less

Ground Snow Load	Exposure Category	Roof Pitch	Roof Angle	Wind Speed (mph)	95			100			105			110			115			120			125			130			140			150			160			170			180			190		
				Roof Area	1	2	3	1	2	3	1	2	3	1	2	3	1	2	3	1	2	3	1	2	3	1	2	3	1	2	3	1	2	3	1	2	3	1	2	3	1	2	3	1	2	3
10	B	2:12	9.5	Non-Exposed	93	93	93	93	93	93	93	93	93	93	93	93	93	93	93	93	93	93	93	93	93	93	93	93	93	90	86	93	83	79	89	76	73	83	71	67	77	66	63	73	62	60
				Exposed	93	93	93	93	93	93	93	93	93	93	93	90	93	90	85	93	85	81	93	81	77	89	77	73	82	70	67	76	64	62	70	60	58	66	56	54	62	53	51	58	50	48
		3:12	14.0	Non-Exposed	91	91	91	91	91	91	91	91	91	91	91	91	91	91	91	91	91	91	91	91	91	91	91	91	91	90	86	91	82	78	88	76	72	82	71	67	77	66	63	73	62	59
				Exposed	91	91	91	91	91	91	91	91	91	91	91	90	91	89	85	91	85	81	91	80	77	89	77	73	82	70	67	75	64	61	70	60	58	65	56	54	62	53	51	58	50	48
		4:12	18.4	Non-Exposed	94	94	94	94	94	94	94	94	94	94	94	94	94	94	94	94	94	94	94	94	94	94	94	93	94	89	85	94	82	78	88	76	72	82	70	67	77	66	63	72	62	59
				Exposed	94	94	94	94	94	94	94	94	94	94	94	89	94	89	84	94	84	80	92	80	76	88	76	73	81	70	66	75	64	61	70	60	57	65	56	54	61	53	51	58	50	48
		5:12	22.6	Non-Exposed	94	94		94	94		94	94		94	94		94	94		94	94		94	94		94	94		94	94		94	92		94	85		93	79		91	73		86	69	
				Exposed	94	94		94	94		94	94		94	94		94	94		94	94		94	89		94	85		94	78		89	71		82	66		76	62		71	58		67	55	
		6:12	26.6	Non-Exposed	95	95		95	95		95	95		95	95		95	95		95	95		95	95		95	95		95	95		95	91		95	84		94	78		91	73		85	68	
				Exposed	95	95		95	95		95	95		95	95		95	95		95	94		95	89		95	85		95	77		89	71		82	66		76	61		71	58		66	55	
		7:12	30.3	Non-Exposed	96	96	96	96	96	96	96	96	96	96	96	96	96	96	96	96	96	96	96	96	96	96	96	93	96	87	84	96	79	76	96	73	69	93	67	63	87	63	59	81	59	55
				Exposed	96	96	96	96	96	96	96	96	95	96	91	89	96	86	83	96	81	78	96	77	74	96	73	70	92	67	63	85	61	58	78	57	53	73	53	49	68	50	46	63	47	43
		8:12	33.7	Non-Exposed	96	96	96	96	96	96	96	96	96	96	96	96	96	96	96	96	96	96	96	96	96	96	95	93	96	86	83	96	79	75	96	73	69	93	67	63	86	63	59	81	59	55
				Exposed	96	96	96	96	96	96	96	96	94	96	91	88	96	86	83	96	81	78	96	77	73	96	73	69	92	66	63	84	61	57	78	57	53	72	53	49	68	50	46	63	47	43
		9:12	36.9	Non-Exposed	96	96	96	96	96	96	96	96	96	96	96	96	96	96	96	96	96	96	96	96	96	96	95	92	96	86	83	96	79	75	96	72	69	92	67	63	86	62	59	81	59	55
				Exposed	96	96	96	96	96	96	96	96	94	96	90	88	96	85	82	96	81	77	96	77	73	96	73	69	91	66	62	84	61	57	78	57	53	72	53	49	67	49	46	63	47	43
		10:12	39.8	Non-Exposed	96	96	96	96	96	96	96	96	96	96	96	96	96	96	96	96	96	96	96	96	96	96	94	92	96	86	83	96	78	75	96	72	68	92	67	63	86	62	59	80	59	55
				Exposed	96	96	96	96	96	96	96	95	93	96	90	87	96	85	82	96	81	77	96	76	73	96	73	69	91	66	62	84	61	57	78	57	53	72	53	49	67	49	46	63	46	43
		11:12	42.5	Non-Exposed	96	96	96	96	96	96	96	96	96	96	96	96	96	96	96	96	96	96	96	96	96	96	94	92	96	85	82	96	78	75	96	72	68	92	67	63	86	62	59	80	59	55
				Exposed	96	96	96	96	96	96	96	95	93	96	90	87	96	85	82	96	80	77	96	76	73	96	73	69	91	66	62	84	61	57	77	56	53	72	53	49	67	49	46	63	46	43
		12:12	45	Non-Exposed	96	96	96	96	96	96	96	96	96	96	96	96	96	96	96	96	96	96	96	96	96	96	93	91	96	85	82	96	78	75	96	72	68	91	67	63	85	62	59	80	58	55
				Exposed	96	96	96	96	96	96	96	95	93	96	89	87	96	84	81	96	80	77	96	76	72	96	72	69	90	66	62	83	61	57	77	56	53	72	53	49	67	49	46	63	46	43
	C	2:12	9.5	Non-Exposed	93	93	93	93	93	93	93	93	93	93	93	93	93	93	89	93	89	84	93	84	80	93	80	76	85	73	70	79	67	64	73	62	60	68	58	56	64	55	53	60	52	50
				Exposed	93	92	88	93	87	82	93	81	77	89	77	73	84	73	69	80	69	66	77	65	62	73	63	60	68	58	56	63	54	52	59	51	48	55	47	0	52	0	0	49	0	0
		3:12	14.0	Non-Exposed	91	91	91	91	91	91	91	91	91	91	91	91	91	91	89	91	88	84	91	84	80	91	80	76	85	73	69	78	67	64	73	62	60	68	58	56	64	55	53	60	52	50
				Exposed	91	91	87	91	86	82	91	81	77	88	76	73	84	72	69	80	69	65	77	65	62	73	62	60	67	58	56	62	54	52	58	50	48	55	47	0	52	0	0	49	0	0
		4:12	18.4	Non-Exposed	94	94	94	94	94	94	94	94	94	94	94	93	94	93	88	94	88	84	94	83	79	92	80	76	84	73	69	78	67	64	73	62	59	68	58	56	64	55	53	60	52	50
				Exposed	94	91	87	94	86	81	93	81	77	88	76	72	84	72	69	80	68	65	76	65	62	73	62	60	67	58	55	62	54	52	58	50	48	55	47	0	52	0	0	49	0	0
		5:12	22.6	Non-Exposed	94	94		94	94		94	94		94	94		94	94		94	94		94	93		94	89		94	81		91	74		86	69		80	64		74	60		69	57	
				Exposed	94	94		94	94		94	90		94	85		94	80		94	76		91	73		87	69		79	63		72	59		67	55		62	52		59	49		56	46	
		6:12	26.6	Non-Exposed	95	95		95	95		95	95		95	95		95	95		95	95		95	93		95	88		95	81		92	74		86	69		79	64		74	60		69	57	
				Exposed	95	95		95	95		95	90		95	85		95	80		95	76		90	72		86	69		79	63		72	59		67	55		62	52		59	49		55	46	
		7:12	30.3	Non-Exposed	96	96	96	96	96	96	96	96	96	96	95	93	96	90	87	96	85	82	96	81	77	96	77	73	96	70	66	88	64	60	82	59	55	76	55	51	71	52	48	66	48	45
				Exposed	96	89	86	96	83	80	96	78	74	96	73	69	95	69	65	91	65	62	86	62	59	82	59	56	75	55	51	69	50	47	64	47	43	60	44	0	56	0	0	53	0	0
		8:12	33.7	Non-Exposed	96	96	96	96	96	96	96	96	96	96	95	93	96	90	87	96	85	82	96	80	77	96	76	73	96	69	66	88	64	60	81	59	55	75	55	51	70	52	48	66	48	45
				Exposed	96	88	85	96	82	79	96	77	74	96	73	69	95	69	65	90	65	61	86	62	58	82	59	56	75	54	51	69	50	47	64	47	43	60	44	0	56	0	0	53	0	0
		9:12	36.9	Non-Exposed	96	96	96	96	96	96	96	96	96	96	94	92	96	89	86	96	84	81	96	80	77	96	76	73	95	69	65	88	63	60	81	59	55	75	55	51	70	51	48	66	48	45
				Exposed	96	88	85	96	82	79	96	77	74	96	73	69	94	69	65	90	65	61	85	62	58	81	59	56	74	54	51	69	50	47	63	47	43	60	44	0	56	0	0	53	0	0
		10:12	39.8	Non-Exposed	96	96	96	96	96	96	96	96	96	96	94	92	96	89	86	96	84	81	96	80	76	96	76	72	95	69	65	87	63	60	81	59	55	75	55	51	70	51	48	66	48	45
				Exposed	96	87	85	96	82	79	96	77	73	96	73	69	94	69	65	89	65	61	85	62	58	81	59	55	74	54	51	68	50	47	63	47	43	60	44	0	56	0	0	53	0	0
		11:12	42.5	Non-Exposed	96	96	96	96	96	96	96	96	96	96	94	91	96	88	86	96	84	81	96	80	76	96	76	72	94	69	65	87	63	60	80	59	55	75	55	51	70	51	48	66	48	45
				Exposed	96	87	84	96	82	78	96	77	73	96	72	69	94	68	65	89	65	61	85	62	58	81	59	55	74	54	51	68	50	46	63	47	43	59	44	0	56	0	0	53	0	0
		12:12	45	Non-Exposed	96	96	96	96	96	96	96	96	96	96	93	91	96	88	85	96	84	80	96	79	76	96	76	72	94	69	65	87	63	59	80	59	55	75	55	51	70	51	48	65	48	45
				Exposed	96	87	84	96	81	78	96	77	73	96	72	68	93	68	64	89	65	61	85	62	58	81	59	55	74	54	51	68	50	46	63	47	43	59	43	0	56	0	0	53	0	0
	D	2:12	9.5	Non-Exposed	93	93	93	93	93	93	93	93	90	93	89	85	93	84	80	92	80	76	88	76	72	84	72	69	77	66	63	71	61	59	66	57	55	62	54	51	59	51	49	55	48	0
				Exposed	93	83	79	90	78	74	85	73	70	81	69	66	77	65	62	73	62	60	70	60	57	67	57	55	62	53	51	57	50	48	54	46	0	50	0	0	48	0	0	0	0	0
		3:12	14.0	Non-Exposed	91	91	91	91	91	91	91	91	89	91	89	84	91	84	80	91	79	76	88	76	72	84	72	69	77	66	63	71	61	58	66	57	55	62	54	51	58	50	48	55	48	0
				Exposed	91	83	79	90	77	74	85	73	69	80	69	66	76	65	62	73	62	60	70	60	57	67	57	55	61	53	51	57	49	47	54	46	0	50	0	0	0	0	0	0	0	0
		4:12	18.4	Non-Exposed	94	94	94	94	94	94	94	93	89	94	88	84	94	83	79	91	79	75	87	75	72	83	72	68	77	65	63	71	61	58	66	57	55	62	53	51	58	50	48	55	48	0
				Exposed	94	82	78	89	77	73	84	73	69	80	69	65	76	65	62	73	62	60	69	59	57	66	57	55	61	53	51	57	49	47	54	46	0	50	0	0	0	0	0	0	0	0
		5:12	22.6	Non-Exposed	94	94		94	94		94	94		94	94		94	93		94	88		94	84		94	80		91	73		84	67		77	62		72	59		67	55		63	52	
				Exposed	94	92		94	86		94	81		94	77		91	73		86	69		82	65		78	63		71	58		65	54		61	51		57	48		54	0		51	0	
		6:12	26.6	Non-Exposed	95	95		95	95		95	95		95	95		95	93		95	88		95	84		94	80		91	73		84	67		77	62		72	58		67	55		63	52	
				Exposed	95	91		95	86		95	81		95	76		90	72		86	69		81	65		78	62		71	58		65	54		61	51		57	48		54	0		51	0	
		7:12	30.3	Non-Exposed	96	96	96	96	96	95	96	91	88	96	85	82	96	81	77	96	76	73	96	72	68	95	69	65	87	63	59	80	58	54	74	54	50	68	50	46	64	47	43	60	44	40
				Exposed	96	79	76	96	74	70	96	70	66	91	66	62	86	62	58	82	59	55	78	56	53	74	54	50	68	50	46	62	46	42	58	0	0	55	0	0	52	0	0	49	0	0
		8:12	33.7	Non-Exposed	96	96	96	96	96	94	96	90	88	96	85	82	96	80	77	96	76	72	96	72	68	94	69	65	86	62	59	79	58	54	73	54	50	68	50	46	64	47	43	60	44	40
				Exposed	96	79	76	96	74	70	96	70	66	90	65	62	86	62	58	81	59	55	77	56	53	74	54	50	67	49	46	62	46	42	58	0	0	55	0	0	52	0	0	49	0	0
		9:12	36.9	Non-Exposed	96	96	96	96	96	94	96	90	87	96	85	82	96	80	77	96	76	72	96	72	68	94	68	64	86	62	59	79	58	54	73	53	50	68	50	46	63	47	43	60	44	0
				Exposed	96	79	75	96	74	70	95	69	65	90	65	62	85	62	58	81	59	55	77	56	53	74	54	50	67	49	46	62	46	42	58	0	0	55	0	0	52	0	0	49	0	0
		10:12	39.8	Non-Exposed	96	96	96	96	95	93	96	90	87	96	84	81	96	80	76	96	76	72	96	72	68	94	68	64	86	62	59	79	58	54	73	53	50	68	50	46	63	47	43	60	44	0
				Exposed	96	79	75	96	74	70	95	69	65	90	65	61	85	62	58	81	59	55	77	56	52	73	54	50	67	49	46	62	46	42	58	0	0	55	0	0	52	0	0	49	0	0
		11:12	42.5	Non-Exposed	96	96	96	96	95	93	96	89	87	96	84	81	96	80	76	96	75	72	96	72	68	93	68	64	85	62	58	79	57	54	73	53	50	68	50	46	63	47	43	60	44	0
				Exposed	96	78	75	96	73	70	94	69	65	89	65	61	85	62	58	81	59	55	77	56	52	73	54	50	67	49	46	62	46	42	58	0	0	55	0	0	52	0	0	49	0	0
		12:12	45	Non-Exposed	96	96	96	96	95	92	96	89	86	96	84	81	96	79	76	96	75	72	96	71	68	93	68	64	85	62	58	78	57	54	73	53	50	68	50	46	63	47	43	60	44	0
				Exposed	96	78	75	96	73	70	94	69	65	89	65	61	85	62	58	80	59	55	77	56	52	73	54	50	67	49	46	62	46	42	58	0	0	55	0	0	52	0	0	49	0	0

Tamarack 2.3 Rail – Hip Flush-Mount on 30 Foot Maximum Mean Roof Height – Landscape – Panel Width = 45 Inches or Less

Ground Snow Load	Exposure Category	Roof Pitch	Roof Angle	Wind Speed (mph)	95			100			105			110			115			120			125			130			140			150			160			170			180			190		
				Roof Area	1	2	3	1	2	3	1	2	3	1	2	3	1	2	3	1	2	3	1	2	3	1	2	3	1	2	3	1	2	3	1	2	3	1	2	3	1	2	3	1	2	3
15	B	2:12	9.5	Non-Exposed	84	84	84	84	84	84	84	84	84	84	84	84	84	84	84	84	84	84	84	84	84	84	84	84	84	84	84	84	83	79	84	76	73	82	71	67	77	66	63	73	62	60
				Exposed	84	84	84	84	84	84	84	84	84	84	84	84	84	84	84	84	84	81	84	81	77	84	77	73	82	70	67	76	64	62	70	60	58	66	56	54	62	53	51	58	50	48
		3:12	14.0	Non-Exposed	81	81	81	81	81	81	81	81	81	81	81	81	81	81	81	81	81	81	81	81	81	81	81	81	81	81	81	81	81	78	81	76	72	80	71	67	77	66	63	73	62	59
				Exposed	81	81	81	81	81	81	81	81	81	81	81	81	81	81	81	81	81	81	81	80	77	81	77	73	81	70	67	75	64	61	70	60	58	65	56	54	62	53	51	58	50	48
		4:12	18.4	Non-Exposed	85	85	85	85	85	85	85	85	85	85	85	85	85	85	85	85	85	85	85	85	85	85	85	85	85	85	85	85	82	78	85	76	72	82	70	67	77	66	63	72	62	59
				Exposed	85	85	85	85	85	85	85	85	85	85	85	85	85	85	84	85	84	80	85	80	76	85	76	73	81	70	66	75	64	61	70	60	57	65	56	54	61	53	51	58	50	48
		5:12	22.6	Non-Exposed	86	86		86	86		86	86		86	86		86	86		86	86		86	86		86	86		86	86		86	86		86	85		84	79		82	73		81	69	
				Exposed	86	86		86	86		86	86		86	86		86	86		86	86		86	86		86	85		86	78		86	71		82	66		76	62		71	58		67	55	
		6:12	26.6	Non-Exposed	87	87		87	87		87	87		87	87		87	87		87	87		87	87		87	87		87	87		87	87		87	84		85	78		83	73		82	68	
				Exposed	87	87		87	87		87	87		87	87		87	87		87	87		87	87		87	85		87	77		87	71		82	66		76	61		71	58		66	55	
		7:12	30.3	Non-Exposed	88	88	88	88	88	88	88	88	88	88	88	88	88	88	88	88	88	88	88	88	88	88	88	88	88	87	84	88	79	76	88	73	69	87	67	63	85	63	59	81	59	55
				Exposed	88	88	88	88	88	88	88	88	88	88	88	88	88	86	83	88	81	78	88	77	74	88	73	70	88	67	63	85	61	58	78	57	53	73	53	49	68	50	46	63	47	43
		8:12	33.7	Non-Exposed	90	90	90	90	90	90	90	90	90	90	90	90	90	90	90	90	90	90	90	90	90	90	90	90	90	86	83	90	79	75	90	73	69	88	67	63	86	63	59	81	59	55
				Exposed	90	90	90	90	90	90	90	90	90	90	90	88	90	86	83	90	81	78	90	77	73	90	73	69	90	66	63	84	61	57	78	57	53	72	53	49	68	50	46	63	47	43
		9:12	36.9	Non-Exposed	91	91	91	91	91	91	91	91	91	91	91	91	91	91	91	91	91	91	91	91	91	91	91	91	91	86	83	91	79	75	91	72	69	90	67	63	86	62	59	81	59	55
				Exposed	91	91	91	91	91	91	91	91	91	91	90	88	91	85	82	91	81	77	91	77	73	91	73	69	91	66	62	84	61	57	78	57	53	72	53	49	67	49	46	63	47	43
		10:12	39.8	Non-Exposed	93	93	93	93	93	93	93	93	93	93	93	93	93	93	93	93	93	93	93	93	93	93	93	92	93	86	83	93	78	75	93	72	68	92	67	63	86	62	59	80	59	55
				Exposed	93	93	93	93	93	93	93	93	93	93	90	87	93	85	82	93	81	77	93	76	73	93	73	69	91	66	62	84	61	57	78	57	53	72	53	49	67	49	46	63	46	43
		11:12	42.5	Non-Exposed	95	95	95	95	95	95	95	95	95	95	95	95	95	95	95	95	95	95	95	95	95	95	94	92	95	85	82	95	78	75	95	72	68	92	67	63	86	62	59	80	59	55
				Exposed	95	95	95	95	95	95	95	95	93	95	90	87	95	85	82	95	80	77	95	76	73	95	73	69	91	66	62	84	61	57	77	56	53	72	53	49	67	49	46	63	46	43
		12:12	45	Non-Exposed	96	96	96	96	96	96	96	96	96	96	96	96	96	96	96	96	96	96	96	96	96	96	93	91	96	85	82	96	78	75	96	72	68	91	67	63	85	62	59	80	58	55
				Exposed	96	96	96	96	96	96	96	95	93	96	89	87	96	84	81	96	80	77	96	76	72	96	72	69	90	66	62	83	61	57	77	56	53	72	53	49	67	49	46	63	46	43
	C	2:12	9.5	Non-Exposed	84	84	84	84	84	84	84	84	84	84	84	84	84	84	84	84	84	84	84	84	80	84	80	76	83	73	70	79	67	64	73	62	60	68	58	56	64	55	53	60	52	50
				Exposed	84	84	84	84	84	82	84	81	77	84	77	73	84	73	69	80	69	66	77	65	62	73	63	60	68	58	56	63	54	52	59	51	48	55	47	0	52	0	0	49	0	0
		3:12	14.0	Non-Exposed	81	81	81	81	81	81	81	81	81	81	81	81	81	81	81	81	81	81	81	81	80	81	80	76	80	73	69	78	67	64	73	62	60	68	58	56	64	55	53	60	52	50
				Exposed	81	81	81	81	81	81	81	81	77	81	76	73	81	72	69	80	69	65	77	65	62	73	62	60	67	58	56	62	54	52	58	50	48	55	47	0	52	0	0	49	0	0
		4:12	18.4	Non-Exposed	85	85	85	85	85	85	85	85	85	85	85	85	85	85	85	85	85	84	85	83	79	85	80	76	84	73	69	78	67	64	73	62	59	68	58	56	64	55	53	60	52	50
				Exposed	85	85	85	85	85	81	85	81	77	85	76	72	84	72	69	80	68	65	76	65	62	73	62	60	67	58	55	62	54	52	58	50	48	55	47	0	52	0	0	49	0	0
		5:12	22.6	Non-Exposed	86	86		86	86		86	86		86	86		86	86		86	86		86	86		86	86		85	81		83	74		81	69		79	64		74	60		69	57	
				Exposed	86	86		86	86		86	86		86	85		86	80		86	76		86	73		86	69		79	63		72	59		67	55		62	52		59	49		56	46	
		6:12	26.6	Non-Exposed	87	87		87	87		87	87		87	87		87	87		87	87		87	87		87	87		86	81		84	74		82	69		79	64		74	60		69	57	
				Exposed	87	87		87	87		87	87		87	85		87	80		87	76		87	72		86	69		79	63		72	59		67	55		62	52		59	49		55	46	
		7:12	30.3	Non-Exposed	88	88	88	88	88	88	88	88	88	88	88	88	88	88	87	88	85	82	88	81	77	88	77	73	88	70	66	85	64	60	82	59	55	76	55	51	71	52	48	66	48	45
				Exposed	88	88	86	88	83	80	88	78	74	88	73	69	88	69	65	88	65	62	86	62	59	82	59	56	75	55	51	69	50	47	64	47	43	60	44	0	56	0	0	53	0	0
		8:12	33.7	Non-Exposed	90	90	90	90	90	90	90	90	90	90	90	90	90	90	87	90	85	82	90	80	77	90	76	73	89	69	66	87	64	60	81	59	55	75	55	51	70	52	48	66	48	45
				Exposed	90	88	85	90	82	79	90	77	74	90	73	69	90	69	65	90	65	61	86	62	58	82	59	56	75	54	51	69	50	47	64	47	43	60	44	0	56	0	0	53	0	0
		9:12	36.9	Non-Exposed	91	91	91	91	91	91	91	91	91	91	91	91	91	89	86	91	84	81	91	80	77	91	76	73	91	69	65	88	63	60	81	59	55	75	55	51	70	51	48	66	48	45
				Exposed	91	88	85	91	82	79	91	77	74	91	73	69	91	69	65	90	65	61	85	62	58	81	59	56	74	54	51	69	50	47	63	47	43	60	44	0	56	0	0	53	0	0
		10:12	39.8	Non-Exposed	93	93	93	93	93	93	93	93	93	93	93	92	93	89	86	93	84	81	93	80	76	93	76	72	93	69	65	87	63	60	81	59	55	75	55	51	70	51	48	66	48	45
				Exposed	93	87	85	93	82	79	93	77	73	93	73	69	93	69	65	89	65	61	85	62	58	81	59	55	74	54	51	68	50	47	63	47	43	60	44	0	56	0	0	53	0	0
		11:12	42.5	Non-Exposed	95	95	95	95	95	95	95	95	95	95	94	91	95	88	86	95	84	81	95	80	76	95	76	72	94	69	65	87	63	60	80	59	55	75	55	51	70	51	48	66	48	45
				Exposed	95	87	84	95	82	78	95	77	73	95	72	69	94	68	65	89	65	61	85	62	58	81	59	55	74	54	51	68	50	46	63	47	43	59	44	0	56	0	0	53	0	0
		12:12	45	Non-Exposed	96	96	96	96	96	96	96	96	96	96	93	91	96	88	85	96	84	80	96	79	76	96	76	72	94	69	65	87	63	59	80	59	55	75	55	51	70	51	48	65	48	45
				Exposed	96	87	84	96	81	78	96	77	73	96	72	68	93	68	64	89	65	61	85	62	58	81	59	55	74	54	51	68	50	46	63	47	43	59	43	0	56	0	0	53	0	0
	D	2:12	9.5	Non-Exposed	84	84	84	84	84	84	84	84	84	84	84	84	84	84	80	84	80	76	83	76	72	82	72	69	77	66	63	71	61	59	66	57	55	62	54	51	59	51	49	55	48	0
				Exposed	84	83	79	84	78	74	84	73	70	81	69	66	77	65	62	73	62	60	70	60	57	67	57	55	62	53	51	57	50	48	54	46	0	50	0	0	48	0	0	0	0	0
		3:12	14.0	Non-Exposed	81	81	81	81	81	81	81	81	81	81	81	81	81	81	80	81	79	76	81	76	72	80	72	69	77	66	63	71	61	58	66	57	55	62	54	51	58	50	48	55	48	0
				Exposed	81	81	79	81	77	74	81	73	69	80	69	66	76	65	62	73	62	60	70	60	57	67	57	55	61	53	51	57	49	47	54	46	0	50	0	0	0	0	0	0	0	0
		4:12	18.4	Non-Exposed	85	85	85	85	85	85	85	85	85	85	85	84	85	83	79	85	79	75	85	75	72	83	72	68	77	65	63	71	61	58	66	57	55	62	53	51	58	50	48	55	48	0
				Exposed	85	82	78	85	77	73	84	73	69	80	69	65	76	65	62	73	62	60	69	59	57	66	57	55	61	53	51	57	49	47	54	46	0	50	0	0	0	0	0	0	0	0
		5:12	22.6	Non-Exposed	86	86		86	86		86	86		86	86		86	86		86	86		86	84		85	80		82	73		80	67		77	62		72	59		67	55		63	52	
				Exposed	86	86		86	86		86	81		86	77		86	73		86	69		82	65		78	63		71	58		65	54		61	51		57	48		54	0		51	0	
		6:12	26.6	Non-Exposed	87	87		87	87		87	87		87	87		87	87		87	87		87	84		86	80		83	73		81	67		77	62		72	58		67	55		63	52	
				Exposed	87	87		87	86		87	81		87	76		87	72		86	69		81	65		78	62		71	58		65	54		61	51		57	48		54	0		51	0	
		7:12	30.3	Non-Exposed	88	88	88	88	88	88	88	88	88	88	85	82	88	81	77	88	76	73	88	72	68	87	69	65	85	63	59	80	58	54	74	54	50	68	50	46	64	47	43	60	44	40
				Exposed	88	79	76	88	74	70	88	70	66	88	66	62	86	62	58	82	59	55	78	56	53	74	54	50	68	50	46	62	46	42	58	0	0	55	0	0	52	0	0	49	0	0
		8:12	33.7	Non-Exposed	90	90	90	90	90	90	90	90	88	90	85	82	90	80	77	90	76	72	90	72	68	89	69	65	86	62	59	79	58	54	73	54	50	68	50	46	64	47	43	60	44	40
				Exposed	90	79	76	90	74	70	90	70	66	90	65	62	86	62	58	81	59	55	77	56	53	74	54	50	67	49	46	62	46	42	58	0	0	55	0	0	52	0	0	49	0	0
		9:12	36.9	Non-Exposed	91	91	91	91	91	91	91	90	87	91	85	82	91	80	77	91	76	72	91	72	68	91	68	64	86	62	59	79	58	54	73	53	50	68	50	46	63	47	43	60	44	0
				Exposed	91	79	75	91	74	70	91	69	65	90	65	62	85	62	58	81	59	55	77	56	53	74	54	50	67	49	46	62	46	42	58	0	0	55	0	0	52	0	0	49	0	0
		10:12	39.8	Non-Exposed	93	93	93	93	93	93	93	90	87	93	84	81	93	80	76	93	76	72	93	72	68	93	68	64	86	62	59	79	58	54	73	53	50	68	50	46	63	47	43	60	44	0
				Exposed	93	79	75	93	74	70	93	69	65	90	65	61	85	62	58	81	59	55	77	56	52	73	54	50	67	49	46	62	46	42	58	0	0	55	0	0	52	0	0	49	0	0
		11:12	42.5	Non-Exposed	95	95	95	95	95	93	95	89	87	95	84	81	95	80	76	95	75	72	95	72	68	93	68	64	85	62	58	79	57	54	73	53	50	68	50	46	63	47	43	60	44	0
				Exposed	95	78	75	95	73	70	94	69	65	89	65	61	85	62	58	81	59	55	77	56	52	73	54	50	67	49	46	62	46	42	58	0	0	55	0	0	52	0	0	49	0	0
		12:12	45	Non-Exposed	96	96	96	96	95	92	96	89	86	96	84	81	96	79	76	96	75	72	96	71	68	93	68	64	85	62	58	78	57	54	73	53	50	68	50	46	63	47	43	60	44	0
				Exposed	96	78	75	96	73	70	94	69	65	89	65	61	85	62	58	80	59	55	77	56	52	73	54	50	67	49	46	62	46	42	58	0	0	55	0	0	52	0	0	49	0	0

Tamarack 2.3 Rail – Hip Flush-Mount on 30 Foot Maximum Mean Roof Height – Landscape – Panel Width = 45 Inches or Less

Ground Snow Load	Exposure Category	Roof Pitch	Roof Angle	Wind Speed (mph)	95			100			105			110			115			120			125			130			140			150			160			170			180			190		
				Roof Area	1	2	3	1	2	3	1	2	3	1	2	3	1	2	3	1	2	3	1	2	3	1	2	3	1	2	3	1	2	3	1	2	3	1	2	3	1	2	3	1	2	3
20	B	2:12	9.5	Non-Exposed	76	76	76	76	76	76	76	76	76	76	76	76	76	76	76	76	76	76	76	76	76	76	76	76	76	76	76	76	76	76	76	76	73	75	71	67	74	66	63	72	62	60
				Exposed	76	76	76	76	76	76	76	76	76	76	76	76	76	76	76	76	76	76	76	76	76	76	76	73	76	70	67	76	64	62	70	60	58	66	56	54	62	53	51	58	50	48
		3:12	14.0	Non-Exposed	74	74	74	74	74	74	74	74	74	74	74	74	74	74	74	74	74	74	74	74	74	74	74	74	74	74	74	74	74	74	74	74	72	73	71	67	71	66	63	70	62	59
				Exposed	74	74	74	74	74	74	74	74	74	74	74	74	74	74	74	74	74	74	74	74	74	74	74	73	74	70	67	74	64	61	70	60	58	65	56	54	62	53	51	58	50	48
		4:12	18.4	Non-Exposed	78	78	78	78	78	78	78	78	78	78	78	78	78	78	78	78	78	78	78	78	78	78	78	78	78	78	78	78	78	78	78	76	72	77	70	67	75	66	63	72	62	59
				Exposed	78	78	78	78	78	78	78	78	78	78	78	78	78	78	78	78	78	78	78	78	76	78	76	73	78	70	66	75	64	61	70	60	57	65	56	54	61	53	51	58	50	48
		5:12	22.6	Non-Exposed	79	79		79	79		79	79		79	79		79	79		79	79		79	79		79	79		79	79		79	79		79	79		77	77		76	73		75	69	
				Exposed	79	79		79	79		79	79		79	79		79	79		79	79		79	79		79	79		79	78		79	71		79	66		76	62		71	58		67	55	
		6:12	26.6	Non-Exposed	80	80		80	80		80	80		80	80		80	80		80	80		80	80		80	80		80	80		80	80		80	80		79	78		77	73		76	68	
				Exposed	80	80		80	80		80	80		80	80		80	80		80	80		80	80		80	80		80	77		80	71		80	66		76	61		71	58		66	55	
		7:12	30.3	Non-Exposed	82	82	82	82	82	82	82	82	82	82	82	82	82	82	82	82	82	82	82	82	82	82	82	82	82	82	82	82	79	76	82	73	69	80	67	63	79	63	59	77	59	55
				Exposed	82	82	82	82	82	82	82	82	82	82	82	82	82	82	82	82	81	78	82	77	74	82	73	70	82	67	63	82	61	58	78	57	53	73	53	49	68	50	46	63	47	43
		8:12	33.7	Non-Exposed	84	84	84	84	84	84	84	84	84	84	84	84	84	84	84	84	84	84	84	84	84	84	84	84	84	84	83	84	79	75	84	73	69	82	67	63	81	63	59	79	59	55
				Exposed	84	84	84	84	84	84	84	84	84	84	84	84	84	84	83	84	81	78	84	77	73	84	73	69	84	66	63	84	61	57	78	57	53	72	53	49	68	50	46	63	47	43
		9:12	36.9	Non-Exposed	86	86	86	86	86	86	86	86	86	86	86	86	86	86	86	86	86	86	86	86	86	86	86	86	86	86	83	86	79	75	86	72	69	84	67	63	82	62	59	81	59	55
				Exposed	86	86	86	86	86	86	86	86	86	86	86	86	86	85	82	86	81	77	86	77	73	86	73	69	86	66	62	84	61	57	78	57	53	72	53	49	67	49	46	63	47	43
		10:12	39.8	Non-Exposed	88	88	88	88	88	88	88	88	88	88	88	88	88	88	88	88	88	88	88	88	88	88	88	88	88	86	83	88	78	75	88	72	68	86	67	63	85	62	59	80	59	55
				Exposed	88	88	88	88	88	88	88	88	88	88	88	87	88	85	82	88	81	77	88	76	73	88	73	69	88	66	62	84	61	57	78	57	53	72	53	49	67	49	46	63	46	43
		11:12	42.5	Non-Exposed	90	90	90	90	90	90	90	90	90	90	90	90	90	90	90	90	90	90	90	90	90	90	90	90	90	85	82	90	78	75	90	72	68	89	67	63	86	62	59	80	59	55
				Exposed	90	90	90	90	90	90	90	90	90	90	90	87	90	85	82	90	80	77	90	76	73	90	73	69	90	66	62	84	61	57	77	56	53	72	53	49	67	49	46	63	46	43
		12:12	45	Non-Exposed	92	92	92	92	92	92	92	92	92	92	92	92	92	92	92	92	92	92	92	92	91	92	85	82	92	78	75	92	72	68	91	67	63	85	62	59	80	58	55
				Exposed	92	92	92	92	92	92	92	92	92	92	89	87	92	84	81	92	80	77	92	76	72	92	72	69	90	66	62	83	61	57	77	56	53	72	53	49	67	49	46	63	46	43
	C	2:12	9.5	Non-Exposed	76	76	76	76	76	76	76	76	76	76	76	76	76	76	76	76	76	76	76	76	76	76	76	76	75	73	70	74	67	64	72	62	60	68	58	56	64	55	53	60	52	50
				Exposed	76	76	76	76	76	76	76	76	76	76	76	73	76	73	69	76	69	66	76	65	62	73	63	60	68	58	56	63	54	52	59	51	48	55	47	0	52	0	0	49	0	0
		3:12	14.0	Non-Exposed	74	74	74	74	74	74	74	74	74	74	74	74	74	74	74	74	74	74	74	74	74	74	74	74	73	73	69	72	67	64	70	62	60	68	58	56	64	55	53	60	52	50
				Exposed	74	74	74	74	74	74	74	74	74	74	74	73	74	72	69	74	69	65	74	65	62	73	62	60	67	58	56	62	54	52	58	50	48	55	47	0	52	0	0	49	0	0
		4:12	18.4	Non-Exposed	78	78	78	78	78	78	78	78	78	78	78	78	78	78	78	78	78	78	78	78	78	78	78	76	77	73	69	76	67	64	73	62	59	68	58	56	64	55	53	60	52	50
				Exposed	78	78	78	78	78	78	78	78	77	78	76	72	78	72	69	78	68	65	76	65	62	73	62	60	67	58	55	62	54	52	58	50	48	55	47	0	52	0	0	49	0	0
		5:12	22.6	Non-Exposed	79	79		79	79		79	79		79	79		79	79		79	79		79	79		79	79		78	78		76	74		75	69		73	64		71	60		69	57	
				Exposed	79	79		79	79		79	79		79	79		79	79		79	76		79	73		79	69		78	63		72	59		67	55		62	52		59	49		56	46	
		6:12	26.6	Non-Exposed	80	80		80	80		80	80		80	80		80	80		80	80		80	80		80	80		79	79		78	74		76	69		74	64		72	60		69	57	
				Exposed	80	80		80	80		80	80		80	80		80	80		80	76		80	72		80	69		79	63		72	59		67	55		62	52		59	49		55	46	
		7:12	30.3	Non-Exposed	82	82	82	82	82	82	82	82	82	82	82	82	82	82	82	82	82	82	82	81	77	82	77	73	81	70	66	79	64	60	77	59	55	75	55	51	71	52	48	66	48	45
				Exposed	82	82	82	82	82	80	82	78	74	82	73	69	82	69	65	82	65	62	82	62	59	82	59	56	75	55	51	69	50	47	64	47	43	60	44	0	56	0	0	53	0	0
		8:12	33.7	Non-Exposed	84	84	84	84	84	84	84	84	84	84	84	84	84	84	84	84	84	82	84	80	77	84	76	73	83	69	66	81	64	60	79	59	55	75	55	51	70	52	48	66	48	45
				Exposed	84	84	84	84	82	79	84	77	74	84	73	69	84	69	65	84	65	61	84	62	58	82	59	56	75	54	51	69	50	47	64	47	43	60	44	0	56	0	0	53	0	0
		9:12	36.9	Non-Exposed	86	86	86	86	86	86	86	86	86	86	86	86	86	86	86	86	84	81	86	80	77	86	76	73	85	69	65	83	63	60	81	59	55	75	55	51	70	51	48	66	48	45
				Exposed	86	86	85	86	82	79	86	77	74	86	73	69	86	69	65	86	65	61	85	62	58	81	59	56	74	54	51	69	50	47	63	47	43	60	44	0	56	0	0	53	0	0
		10:12	39.8	Non-Exposed	88	88	88	88	88	88	88	88	88	88	88	88	88	88	86	88	84	81	88	80	76	88	76	72	87	69	65	85	63	60	81	59	55	75	55	51	70	51	48	66	48	45
				Exposed	88	87	85	88	82	79	88	77	73	88	73	69	88	69	65	88	65	61	85	62	58	81	59	55	74	54	51	68	50	47	63	47	43	60	44	0	56	0	0	53	0	0
		11:12	42.5	Non-Exposed	90	90	90	90	90	90	90	90	90	90	90	90	90	88	86	90	84	81	90	80	76	90	76	72	90	69	65	87	63	60	80	59	55	75	55	51	70	51	48	66	48	45
				Exposed	90	87	84	90	82	78	90	77	73	90	72	69	90	68	65	89	65	61	85	62	58	81	59	55	74	54	51	68	50	46	63	47	43	59	44	0	56	0	0	53	0	0
		12:12	45	Non-Exposed	92	92	92	92	92	92	92	92	92	92	92	91	92	88	85	92	84	80	92	79	76	92	76	72	92	69	65	87	63	59	80	59	55	75	55	51	70	51	48	65	48	45
				Exposed	92	87	84	92	81	78	92	77	73	92	72	68	92	68	64	89	65	61	85	62	58	81	59	55	74	54	51	68	50	46	63	47	43	59	43	0	56	0	0	53	0	0
	D	2:12	9.5	Non-Exposed	76	76	76	76	76	76	76	76	76	76	76	76	76	76	76	76	76	76	76	76	72	75	72	69	74	66	63	71	61	59	66	57	55	62	54	51	59	51	49	55	48	0
				Exposed	76	76	76	76	76	74	76	73	70	76	69	66	76	65	62	73	62	60	70	60	57	67	57	55	62	53	51	57	50	48	54	46	0	50	0	0	48	0	0	0	0	0
		3:12	14.0	Non-Exposed	74	74	74	74	74	74	74	74	74	74	74	74	74	74	74	74	74	74	74	74	72	73	72	69	71	66	63	70	61	58	66	57	55	62	54	51	58	50	48	55	48	0
				Exposed	74	74	74	74	74	74	74	73	69	74	69	66	74	65	62	73	62	60	70	60	57	67	57	55	61	53	51	57	49	47	54	46	0	50	0	0	0	0	0	0	0	0
		4:12	18.4	Non-Exposed	78	78	78	78	78	78	78	78	78	78	78	78	78	78	78	78	78	75	78	75	72	77	72	68	75	65	63	71	61	58	66	57	55	62	53	51	58	50	48	55	48	0
				Exposed	78	78	78	78	77	73	78	73	69	78	69	65	76	65	62	73	62	60	69	59	57	66	57	55	61	53	51	57	49	47	54	46	0	50	0	0	0	0	0	0	0	0
		5:12	22.6	Non-Exposed	79	79		79	79		79	79		79	79		79	79		79	79		79	79		78	78		76	73		74	67		72	62		70	59		67	55		63	52	
				Exposed	79	79		79	79		79	79		79	77		79	73		79	69		79	65		78	63		71	58		65	54		61	51		57	48		54	0		51	0	
		6:12	26.6	Non-Exposed	80	80		80	80		80	80		80	80		80	80		80	80		80	80		79	79		77	73		75	67		73	62		71	58		67	55		63	52	
				Exposed	80	80		80	80		80	80		80	76		80	72		80	69		80	65		78	62		71	58		65	54		61	51		57	48		54	0		51	0	
		7:12	30.3	Non-Exposed	82	82	82	82	82	82	82	82	82	82	82	82	82	81	77	82	76	73	82	72	68	81	69	65	79	63	59	77	58	54	74	54	50	68	50	46	64	47	43	60	44	40
				Exposed	82	79	76	82	74	70	82	70	66	82	66	62	82	62	58	82	59	55	78	56	53	74	54	50	68	50	46	62	46	42	58	0	0	55	0	0	52	0	0	49	0	0
		8:12	33.7	Non-Exposed	84	84	84	84	84	84	84	84	84	84	84	82	84	80	77	84	76	72	84	72	68	83	69	65	80	62	59	78	58	54	73	54	50	68	50	46	64	47	43	60	44	40
				Exposed	84	79	76	84	74	70	84	70	66	84	65	62	84	62	58	81	59	55	77	56	53	74	54	50	67	49	46	62	46	42	58	0	0	55	0	0	52	0	0	49	0	0
		9:12	36.9	Non-Exposed	86	86	86	86	86	86	86	86	86	86	85	82	86	80	77	86	76	72	86	72	68	85	68	64	82	62	59	79	58	54	73	53	50	68	50	46	63	47	43	60	44	0
				Exposed	86	79	75	86	74	70	86	69	65	86	65	62	85	62	58	81	59	55	77	56	53	74	54	50	67	49	46	62	46	42	58	0	0	55	0	0	52	0	0	49	0	0
		10:12	39.8	Non-Exposed	88	88	88	88	88	88	88	88	87	88	84	81	88	80	76	88	76	72	88	72	68	87	68	64	84	62	59	79	58	54	73	53	50	68	50	46	63	47	43	60	44	0
				Exposed	88	79	75	88	74	70	88	69	65	88	65	61	85	62	58	81	59	55	77	56	52	73	54	50	67	49	46	62	46	42	58	0	0	55	0	0	52	0	0	49	0	0
		11:12	42.5	Non-Exposed	90	90	90	90	90	90	90	89	87	90	84	81	90	80	76	90	75	72	90	72	68	89	68	64	85	62	58	79	57	54	73	53	50	68	50	46	63	47	43	60	44	0
				Exposed	90	78	75	90	73	70	90	69	65	89	65	61	85	62	58	81	59	55	77	56	52	73	54	50	67	49	46	62	46	42	58	0	0	55	0	0	52	0	0	49	0	0
		12:12	45	Non-Exposed	92	92	92	92	92	92	92	89	86	92	84	81	92	79	76	92	75	72	92	71	68	91	68	64	85	62	58	78	57	54	73	53	50	68	50	46	63	47	43	60	44	0
				Exposed	92	78	75	92	73	70	92	69	65	89	65	61	85	62	58	80	59	55	77	56	52	73	54	50	67	49	46	62	46	42	58	0	0	55	0	0	52	0	0	49	0	0

Tamarack 2.3 Rail – Hip Flush-Mount on 30 Foot Maximum Mean Roof Height – Landscape – Panel Width = 45 Inches or Less

Ground Snow Load	Exposure Category	Roof Pitch	Roof Angle	Wind Speed (mph)	95			100			105			110			115			120			125			130			140			150			160			170			180			190		
				Roof Area	1	2	3	1	2	3	1	2	3	1	2	3	1	2	3	1	2	3	1	2	3	1	2	3	1	2	3	1	2	3	1	2	3	1	2	3	1	2	3	1	2	3
25	B	2:12	9.5	Non-Exposed	75	75	75	75	75	75	75	75	75	75	75	75	75	75	75	75	75	75	75	75	75	75	75	75	75	75	75	75	75	75	75	75	73	74	71	67	72	66	63	71	62	60
				Exposed	75	75	75	75	75	75	75	75	75	75	75	75	75	75	75	75	75	75	75	75	75	75	75	73	75	70	67	75	64	62	70	60	58	66	56	54	62	53	51	58	50	48
		3:12	14.0	Non-Exposed	72	72	72	72	72	72	72	72	72	72	72	72	72	72	72	72	72	72	72	72	72	72	72	72	72	72	72	72	72	72	72	72	72	71	71	67	70	66	63	69	62	59
				Exposed	72	72	72	72	72	72	72	72	72	72	72	72	72	72	72	72	72	72	72	72	72	72	72	72	72	70	67	72	64	61	70	60	58	65	56	54	62	53	51	58	50	48
		4:12	18.4	Non-Exposed	72	72	72	72	72	72	72	72	72	72	72	72	72	72	72	72	72	72	72	72	72	72	72	72	72	72	72	72	72	72	72	72	72	71	70	67	70	66	63	69	62	59
				Exposed	72	72	72	72	72	72	72	72	72	72	72	72	72	72	72	72	72	72	72	72	72	72	72	72	72	70	66	72	64	61	70	60	57	65	56	54	61	53	51	58	50	48
		5:12	22.6	Non-Exposed	74	74		74	74		74	74		74	74		74	74		74	74		74	74		74	74		74	74		74	74		73	73		72	72		71	71		70	69	
				Exposed	74	74		74	74		74	74		74	74		74	74		74	74		74	74		74	74		74	74		74	71		73	66		72	62		71	58		67	55	
		6:12	26.6	Non-Exposed	75	75		75	75		75	75		75	75		75	75		75	75		75	75		75	75		75	75		75	75		75	75		73	73		72	72		71	68	
				Exposed	75	75		75	75		75	75		75	75		75	75		75	75		75	75		75	75		75	75		75	71		75	66		73	61		71	58		66	55	
		7:12	30.3	Non-Exposed	77	77	77	77	77	77	77	77	77	77	77	77	77	77	77	77	77	77	77	77	77	77	77	77	77	77	77	77	77	76	76	73	69	75	67	63	74	63	59	73	59	55
				Exposed	77	77	77	77	77	77	77	77	77	77	77	77	77	77	77	77	77	77	77	77	74	77	73	70	77	67	63	77	61	58	76	57	53	73	53	49	68	50	46	63	47	43
		8:12	33.7	Non-Exposed	79	79	79	79	79	79	79	79	79	79	79	79	79	79	79	79	79	79	79	79	79	79	79	79	79	79	79	79	79	75	79	73	69	77	67	63	76	63	59	74	59	55
				Exposed	79	79	79	79	79	79	79	79	79	79	79	79	79	79	79	79	79	78	79	77	73	79	73	69	79	66	63	79	61	57	78	57	53	72	53	49	68	50	46	63	47	43
		9:12	36.9	Non-Exposed	81	81	81	81	81	81	81	81	81	81	81	81	81	81	81	81	81	81	81	81	81	81	81	81	81	81	81	81	79	75	81	72	69	79	67	63	78	62	59	76	59	55
				Exposed	81	81	81	81	81	81	81	81	81	81	81	81	81	81	81	81	81	77	81	77	73	81	73	69	81	66	62	81	61	57	78	57	53	72	53	49	67	49	46	63	47	43
		10:12	39.8	Non-Exposed	83	83	83	83	83	83	83	83	83	83	83	83	83	83	83	83	83	83	83	83	83	83	83	83	83	83	83	83	78	75	83	72	68	82	67	63	80	62	59	78	59	55
				Exposed	83	83	83	83	83	83	83	83	83	83	83	83	83	83	82	83	81	77	83	76	73	83	73	69	83	66	62	83	61	57	78	57	53	72	53	49	67	49	46	63	46	43
		11:12	42.5	Non-Exposed	85	85	85	85	85	85	85	85	85	85	85	85	85	85	85	85	85	85	85	85	85	85	85	85	85	85	82	85	78	75	85	72	68	84	67	63	82	62	59	80	59	55
				Exposed	85	85	85	85	85	85	85	85	85	85	85	85	85	85	82	85	80	77	85	76	73	85	73	69	85	66	62	84	61	57	77	56	53	72	53	49	67	49	46	63	46	43
		12:12	45	Non-Exposed	88	88	88	88	88	88	88	88	88	88	88	88	88	88	88	88	88	88	88	88	88	88	88	88	88	85	82	88	78	75	88	72	68	86	67	63	85	62	59	80	58	55
				Exposed	88	88	88	88	88	88	88	88	88	88	88	87	88	84	81	88	80	77	88	76	72	88	72	69	88	66	62	83	61	57	77	56	53	72	53	49	67	49	46	63	46	43
	C	2:12	9.5	Non-Exposed	75	75	75	75	75	75	75	75	75	75	75	75	75	75	75	75	75	75	75	75	75	75	75	75	74	73	70	73	67	64	71	62	60	68	58	56	64	55	53	60	52	50
				Exposed	75	75	75	75	75	75	75	75	75	75	75	73	75	73	69	75	69	66	75	65	62	73	63	60	68	58	56	63	54	52	59	51	48	55	47	0	52	0	0	49	0	0
		3:12	14.0	Non-Exposed	72	72	72	72	72	72	72	72	72	72	72	72	72	72	72	72	72	72	72	72	72	72	72	72	72	72	69	70	67	64	69	62	60	68	58	56	64	55	53	60	52	50
				Exposed	72	72	72	72	72	72	72	72	72	72	72	72	72	72	69	72	69	65	72	65	62	72	62	60	67	58	56	62	54	52	58	50	48	55	47	0	52	0	0	49	0	0
		4:12	18.4	Non-Exposed	72	72	72	72	72	72	72	72	72	72	72	72	72	72	72	72	72	72	72	72	72	72	72	72	72	72	69	70	67	64	69	62	59	68	58	56	64	55	53	60	52	50
				Exposed	72	72	72	72	72	72	72	72	72	72	72	72	72	72	69	72	68	65	72	65	62	72	62	60	67	58	55	62	54	52	58	50	48	55	47	0	52	0	0	49	0	0
		5:12	22.6	Non-Exposed	74	74		74	74		74	74		74	74		74	74		74	74		74	74		74	74		73	73		71	71		70	69		68	64		67	60		65	57	
				Exposed	74	74		74	74		74	74		74	74		74	74		74	74		74	73		74	69		73	63		71	59		67	55		62	52		59	49		56	46	
		6:12	26.6	Non-Exposed	75	75		75	75		75	75		75	75		75	75		75	75		75	75		75	75		74	74		72	72		71	69		69	64		68	60		66	57	
				Exposed	75	75		75	75		75	75		75	75		75	75		75	75		75	72		75	69		74	63		72	59		67	55		62	52		59	49		56	46	
25		7:12	30.3	Non-Exposed	77	77	77	77	77	77	77	77	77	77	77	77	77	77	77	77	77	77	77	77	77	77	77	73	76	70	66	74	64	60	73	59	55	71	55	51	69	52	48	66	48	45
				Exposed	77	77	77	77	77	77	77	77	74	77	73	69	77	69	65	77	65	62	77	62	59	77	59	56	75	55	51	69	50	47	64	47	43	60	44	0	56	0	0	53	0	0
		8:12	33.7	Non-Exposed	79	79	79	79	79	79	79	79	79	79	79	79	79	79	79	79	79	79	79	79	77	79	76	73	78	69	66	76	64	60	74	59	55	73	55	51	70	52	48	66	48	45
				Exposed	79	79	79	79	79	79	79	77	74	79	73	69	79	69	65	79	65	61	79	62	58	79	59	56	75	54	51	69	50	47	64	47	43	60	44	0	56	0	0	53	0	0
		9:12	36.9	Non-Exposed	81	81	81	81	81	81	81	81	81	81	81	81	81	81	81	81	81	81	81	80	77	81	76	73	80	69	65	78	63	60	76	59	55	75	55	51	70	51	48	66	48	45
				Exposed	81	81	81	81	81	79	81	77	74	81	73	69	81	69	65	81	65	61	81	62	58	81	59	56	74	54	51	69	50	47	63	47	43	60	44	0	56	0	0	53	0	0
		10:12	39.8	Non-Exposed	83	83	83	83	83	83	83	83	83	83	83	83	83	83	83	83	83	81	83	80	76	83	76	72	82	69	65	80	63	60	78	59	55	75	55	51	70	51	48	66	48	45
				Exposed	83	83	83	83	82	79	83	77	73	83	73	69	83	69	65	83	65	61	83	62	58	81	59	55	74	54	51	68	50	47	63	47	43	60	44	0	56	0	0	53	0	0
		11:12	42.5	Non-Exposed	85	85	85	85	85	85	85	85	85	85	85	85	85	85	85	85	84	81	85	80	76	85	76	72	85	69	65	83	63	60	80	59	55	75	55	51	70	51	48	66	48	45
				Exposed	85	85	84	85	82	78	85	77	73	85	72	69	85	68	65	85	65	61	85	62	58	81	59	55	74	54	51	68	50	46	63	47	43	59	44	0	56	0	0	53	0	0
		12:12	45	Non-Exposed	88	88	88	88	88	88	88	88	88	88	88	88	88	88	85	88	84	80	88	79	76	88	76	72	87	69	65	85	63	59	80	59	55	75	55	51	70	51	48	65	48	45
				Exposed	88	87	84	88	81	78	88	77	73	88	72	68	88	68	64	88	65	61	85	62	58	81	59	55	74	54	51	68	50	46	63	47	43	59	43	0	56	0	0	53	0	0
	D	2:12	9.5	Non-Exposed	75	75	75	75	75	75	75	75	75	75	75	75	75	75	75	75	75	75	75	75	72	74	72	69	72	66	63	71	61	59	66	57	55	62	54	51	59	51	49	55	48	0
				Exposed	75	75	75	75	75	74	75	73	70	75	69	66	75	65	62	73	62	60	70	60	57	67	57	55	62	53	51	57	50	48	54	46	0	50	0	0	48	0	0	0	0	0
		3:12	14.0	Non-Exposed	72	72	72	72	72	72	72	72	72	72	72	72	72	72	72	72	72	72	72	72	72	72	72	69	70	66	63	69	61	58	66	57	55	62	54	51	58	50	48	55	48	0
				Exposed	72	72	72	72	72	72	72	72	69	72	69	66	72	65	62	72	62	60	70	60	57	67	57	55	61	53	51	57	49	47	54	46	0	50	0	0	0	0	0	0	0	0
		4:12	18.4	Non-Exposed	72	72	72	72	72	72	72	72	72	72	72	72	72	72	72	72	72	72	72	72	72	72	72	68	70	65	63	69	61	58	66	57	55	62	53	51	58	50	48	55	48	0
				Exposed	72	72	72	72	72	72	72	72	69	72	69	65	72	65	62	72	62	60	69	59	57	66	57	55	61	53	51	57	49	47	54	46	0	50	0	0	0	0	0	0	0	0
		5:12	22.6	Non-Exposed	74	74		74	74		74	74		74	74		74	74		74	74		73	73		72	72		71	71		69	67		68	62		66	59		65	55		63	52	
				Exposed	74	74		74	74		74	74		74	74		74	73		74	69		73	65		72	63		71	58		65	54		61	51		57	48		54	0		51	0	
		6:12	26.6	Non-Exposed	75	75		75	75		75	75		75	75		75	75		75	75		75	75		74	74		72	72		71	67		69	62		67	58		66	55		63	52	
				Exposed	75	75		75	75		75	75		75	75		75	72		75	69		75	65		74	62		71	58		65	54		61	51		57	48		54	0		51	0	
		7:12	30.3	Non-Exposed	77	77	77	77	77	77	77	77	77	77	77	77	77	77	77	77	76	73	76	72	68	76	69	65	74	63	59	72	58	54	70	54	50	68	50	46	64	47	43	60	44	40
				Exposed	77	77	76	77	74	70	77	70	66	77	66	62	77	62	58	77	59	55	76	56	53	74	54	50	68	50	46	62	46	42	58	0	0	55	0	0	52	0	0	49	0	0
		8:12	33.7	Non-Exposed	79	79	79	79	79	79	79	79	79	79	79	79	79	79	77	79	76	72	78	72	68	77	69	65	76	62	59	74	58	54	72	54	50	68	50	46	64	47	43	60	44	40
				Exposed	79	79	76	79	74	70	79	70	66	79	65	62	79	62	58	79	59	55	77	56	53	74	54	50	67	49	46	62	46	42	58	0	0	55	0	0	52	0	0	49	0	0
		9:12	36.9	Non-Exposed	81	81	81	81	81	81	81	81	81	81	81	81	81	80	77	81	76	72	81	72	68	80	68	64	78	62	59	76	58	54	73	53	50	68	50	46	63	47	43	60	44	0
				Exposed	81	79	75	81	74	70	81	69	65	81	65	62	81	62	58	81	59	55	77	56	53	74	54	50	67	49	46	62	46	42	58	0	0	55	0	0	52	0	0	49	0	0
		10:12	39.8	Non-Exposed	83	83	83	83	83	83	83	83	83	83	83	81	83	80	76	83	76	72	83	72	68	82	68	64	80	62	59	78	58	54	73	53	50	68	50	46	63	47	43	60	44	0
				Exposed	83	79	75	83	74	70	83	69	65	83	65	61	83	62	58	81	59	55	77	56	52	73	54	50	67	49	46	62	46	42	58	0	0	55	0	0	52	0	0	49	0	0
		11:12	42.5	Non-Exposed	85	85	85	85	85	85	85	85	85	85	84	81	85	80	76	85	75	72	85	72	68	84	68	64	82	62	58	79	57	54	73	53	50	68	50	46	63	47	43	60	44	0
				Exposed	85	78	75	85	73	70	85	69	65	85	65	61	85	62	58	81	59	55	77	56	52	73	54	50	67	49	46	62	46	42	58	0	0	55	0	0	52	0	0	49	0	0
		12:12	45	Non-Exposed	88	88	88	88	88	88	88	88	86	88	84	81	88	79	76	88	75	72	88	71	68	87	68	64	84	62	58	78	57	54	73	53	50	68	50	46	63	47	43	60	44	0
				Exposed	88	78	75	88	73	70	88	69	65	88	65	61	85	62	58	80	59	55	77	56	52	73	54	50	67	49	46	62	46	42	58	0	0	55	0	0	52	0	0	49	0	0

Tamarack 2.3 Rail – Hip Flush-Mount on 30 Foot Maximum Mean Roof Height – Landscape – Panel Width = 45 Inches or Less

Ground Snow Load	Exposure Category	Roof Pitch	Roof Angle	Wind Speed (mph)	95			100			105			110			115			120			125			130			140			150			160			170			180			190		
				Roof Area	1	2	3	1	2	3	1	2	3	1	2	3	1	2	3	1	2	3	1	2	3	1	2	3	1	2	3	1	2	3	1	2	3	1	2	3	1	2	3	1	2	3
30	B	2:12	9.5	Non-Exposed	69	69	69	69	69	69	69	69	69	69	69	69	69	69	69	69	69	69	69	69	69	69	69	69	69	69	69	69	69	69	69	69	69	69	69	67	68	66	63	67	62	60
				Exposed	69	69	69	69	69	69	69	69	69	69	69	69	69	69	69	69	69	69	69	69	69	69	69	69	69	69	67	69	64	62	69	60	58	66	56	54	62	53	51	58	50	48
		3:12	14.0	Non-Exposed	67	67	67	67	67	67	67	67	67	67	67	67	67	67	67	67	67	67	67	67	67	67	67	67	67	67	67	67	67	67	67	67	67	67	67	67	66	66	63	65	62	59
				Exposed	67	67	67	67	67	67	67	67	67	67	67	67	67	67	67	67	67	67	67	67	67	67	67	67	67	67	67	67	64	61	67	60	58	65	56	54	62	53	51	58	50	48
		4:12	18.4	Non-Exposed	67	67	67	67	67	67	67	67	67	67	67	67	67	67	67	67	67	67	67	67	67	67	67	67	67	67	67	67	67	67	67	67	67	67	67	67	66	66	63	65	62	59
				Exposed	67	67	67	67	67	67	67	67	67	67	67	67	67	67	67	67	67	67	67	67	67	67	67	67	67	67	66	67	64	61	67	60	57	65	56	54	61	53	51	58	50	48
		5:12	22.6	Non-Exposed	68	68		68	68		68	68		68	68		68	68		68	68		68	68		68	68		68	68		68	68		68	68		68	68		67	67		66	66	
				Exposed	68	68		68	68		68	68		68	68		68	68		68	68		68	68		68	68		68	68		68	62		68	66		68	62		67	58		66	55	
		6:12	26.6	Non-Exposed	70	70		70	70		70	70		70	70		70	70		70	70		70	70		70	70		70	70		70	70		70	70		69	69		68	68		67	67	
				Exposed	70	70		70	70		70	70		70	70		70	70		70	70		70	70		70	70		70	70		70	70		70	66		69	61		68	58		66	55	
		7:12	30.3	Non-Exposed	72	72	72	72	72	72	72	72	72	72	72	72	72	72	72	72	72	72	72	72	72	72	72	72	72	72	72	72	72	72	72	72	69	71	67	63	70	63	59	69	59	55
				Exposed	72	72	72	72	72	72	72	72	72	72	72	72	72	72	72	72	72	72	72	72	72	72	72	70	72	67	63	72	61	58	72	57	53	71	53	49	68	50	46	63	47	43
		8:12	33.7	Non-Exposed	74	74	74	74	74	74	74	74	74	74	74	74	74	74	74	74	74	74	74	74	74	74	74	74	74	74	74	74	74	74	74	73	69	73	67	63	72	63	59	70	59	55
				Exposed	74	74	74	74	74	74	74	74	74	74	74	74	74	74	74	74	74	74	74	74	73	74	73	69	74	66	63	74	61	57	74	57	53	72	53	49	68	50	46	63	47	43
		9:12	36.9	Non-Exposed	77	77	77	77	77	77	77	77	77	77	77	77	77	77	77	77	77	77	77	77	77	77	77	77	77	77	77	77	77	75	76	72	69	75	67	63	74	62	59	73	59	55
				Exposed	77	77	77	77	77	77	77	77	77	77	77	77	77	77	77	77	77	77	77	77	73	77	73	69	77	66	62	77	61	57	76	57	53	72	53	49	67	49	46	63	47	43
		10:12	39.8	Non-Exposed	79	79	79	79	79	79	79	79	79	79	79	79	79	79	79	79	79	79	79	79	79	79	79	79	79	79	79	79	78	75	79	72	68	78	67	63	76	62	59	75	59	55
				Exposed	79	79	79	79	79	79	79	79	79	79	79	79	79	79	79	79	79	77	79	76	73	79	73	69	79	66	62	79	61	57	78	57	53	72	53	49	67	49	46	63	46	43
		11:12	42.5	Non-Exposed	81	81	81	81	81	81	81	81	81	81	81	81	81	81	81	81	81	81	81	81	81	81	81	81	81	81	81	81	78	75	81	72	68	80	67	63	78	62	59	77	59	55
				Exposed	81	81	81	81	81	81	81	81	81	81	81	81	81	81	81	81	80	77	81	76	73	81	73	69	81	66	62	81	61	57	77	56	53	72	53	49	67	49	46	63	46	43
		12:12	45	Non-Exposed	84	84	84	84	84	84	84	84	84	84	84	84	84	84	84	84	84	84	84	84	84	84	84	84	84	84	82	84	78	75	84	72	68	83	67	63	81	62	59	79	58	55
				Exposed	84	84	84	84	84	84	84	84	84	84	84	84	84	84	81	84	80	77	84	76	72	84	72	69	84	66	62	83	61	57	77	56	53	72	53	49	67	49	46	63	46	43
	C	2:12	9.5	Non-Exposed	69	69	69	69	69	69	69	69	69	69	69	69	69	69	69	69	69	69	69	69	69	69	69	69	69	69	69	68	67	64	67	62	60	66	58	56	64	55	53	60	52	50
				Exposed	69	69	69	69	69	69	69	69	69	69	69	69	69	69	69	69	69	66	69	65	62	69	63	60	68	58	56	63	54	52	59	51	48	55	47	0	52	0	0	49	0	0
		3:12	14.0	Non-Exposed	67	67	67	67	67	67	67	67	67	67	67	67	67	67	67	67	67	67	67	67	67	67	67	67	67	67	67	66	66	64	65	62	60	64	58	56	63	55	53	60	52	50
				Exposed	67	67	67	67	67	67	67	67	67	67	67	67	67	67	67	67	67	65	67	65	62	67	62	60	67	58	56	62	54	52	58	50	48	55	47	0	52	0	0	49	0	0
		4:12	18.4	Non-Exposed	67	67	67	67	67	67	67	67	67	67	67	67	67	67	67	67	67	67	67	67	67	67	67	67	67	67	67	66	66	64	65	62	59	64	58	56	63	55	53	60	52	50
				Exposed	67	67	67	67	67	67	67	67	67	67	67	67	67	67	67	67	67	65	67	65	62	67	62	60	67	58	55	62	54	52	58	50	48	55	47	0	52	0	0	49	0	0
		5:12	22.6	Non-Exposed	68	68		68	68		68	68		68	68		68	68		68	68		68	68		68	68		68	68		67	67		66	66		65	64		63	60		62	57	
				Exposed	68	68		68	68		68	68		68	68		68	68		68	68		68	68		68	68		68	63		67	59		66	55		62	52		59	49		56	46	
		6:12	26.6	Non-Exposed	70	70		70	70		70	70		70	70		70	70		70	70		70	70		70	70		70	70		68	68		67	67		66	64		64	60		63	57	
				Exposed	70	70		70	70		70	70		70	70		70	70		70	70		70	70		70	69		70	63		68	59		67	55		62	52		59	49		55	46	
		7:12	30.3	Non-Exposed	72	72	72	72	72	72	72	72	72	72	72	72	72	72	72	72	72	72	72	72	72	72	72	72	71	70	66	70	64	60	69	59	55	67	55	51	66	52	48	65	48	45
				Exposed	72	72	72	72	72	72	72	72	72	72	72	69	72	69	65	72	65	62	72	62	59	72	59	56	71	55	51	69	50	47	64	47	43	60	44	0	56	0	0	53	0	0
		8:12	33.7	Non-Exposed	74	74	74	74	74	74	74	74	74	74	74	74	74	74	74	74	74	74	74	74	74	74	74	73	73	69	66	72	64	60	71	59	55	69	55	51	68	52	48	66	48	45
				Exposed	74	74	74	74	74	74	74	74	74	74	73	69	74	69	65	74	65	61	74	62	58	74	59	56	73	54	51	69	50	47	64	47	43	60	44	0	56	0	0	53	0	0
		9:12	36.9	Non-Exposed	77	77	77	77	77	77	77	77	77	77	77	77	77	77	77	77	77	77	77	77	77	77	76	73	76	69	65	74	63	60	73	59	55	71	55	51	69	51	48	66	48	45
				Exposed	77	77	77	77	77	77	77	77	74	77	73	69	77	69	65	77	65	61	77	62	58	77	59	56	74	54	51	69	50	47	63	47	43	60	44	0	56	0	0	53	0	0
		10:12	39.8	Non-Exposed	79	79	79	79	79	79	79	79	79	79	79	79	79	79	79	79	79	79	79	79	76	79	76	72	78	69	65	76	63	60	75	59	55	73	55	51	70	51	48	66	48	45
				Exposed	79	79	79	79	79	79	79	77	73	79	73	69	79	69	65	79	65	61	79	62	58	79	59	55	74	54	51	68	50	47	63	47	43	60	44	0	56	0	0	53	0	0
		11:12	42.5	Non-Exposed	81	81	81	81	81	81	81	81	81	81	81	81	81	81	81	81	81	81	81	80	76	81	76	72	81	69	65	79	63	60	77	59	55	75	55	51	70	51	48	66	48	45
				Exposed	81	81	81	81	81	78	81	77	73	81	72	69	81	68	65	81	65	61	81	62	58	81	59	55	74	54	51	68	50	46	63	47	43	59	44	0	56	0	0	53	0	0
		12:12	45	Non-Exposed	84	84	84	84	84	84	84	84	84	84	84	84	84	84	84	84	84	80	84	79	76	84	76	72	83	69	65	81	63	59	79	59	55	75	55	51	70	51	48	65	48	45
				Exposed	84	84	84	84	81	78	84	77	73	84	72	68	84	68	64	84	65	61	84	62	58	81	59	55	74	54	51	68	50	46	63	47	43	59	43	0	56	0	0	53	0	0
	D	2:12	9.5	Non-Exposed	69	69	69	69	69	69	69	69	69	69	69	69	69	69	69	69	69	69	69	69	69	69	69	69	68	66	63	67	61	59	65	57	55	62	54	51	59	51	49	55	48	0
				Exposed	69	69	69	69	69	69	69	69	69	69	69	66	69	65	62	69	62	60	69	60	57	67	57	55	62	53	51	57	50	48	54	46	0	50	0	0	48	0	0	0	0	0
		3:12	14.0	Non-Exposed	67	67	67	67	67	67	67	67	67	67	67	67	67	67	67	67	67	67	67	67	67	67	67	67	66	66	63	65	61	58	63	57	55	62	54	51	58	50	48	55	48	0
				Exposed	67	67	67	67	67	67	67	67	67	67	67	66	67	65	62	67	62	60	67	60	57	67	57	55	61	53	51	57	49	47	54	46	0	50	0	0	0	0	0	0	0	0
		4:12	18.4	Non-Exposed	67	67	67	67	67	67	67	67	67	67	67	67	67	67	67	67	67	67	67	67	67	67	67	67	66	65	63	65	61	58	63	57	55	62	53	51	58	50	48	55	48	0
				Exposed	67	67	67	67	67	67	67	67	67	67	67	65	67	65	62	67	62	60	67	59	57	66	57	55	61	53	51	57	49	47	54	46	0	50	0	0	0	0	0	0	0	0
		5:12	22.6	Non-Exposed	68	68		68	68		68	68		68	68		68	68		68	68		68	68		68	68		67	67		65	65		64	62		63	59		62	55		60	52	
				Exposed	68	68		68	68		68	68		68	68		68	68		68	68		68	65		68	63		67	58		65	54		61	51		57	48		54	0		51	0	
		6:12	26.6	Non-Exposed	70	70		70	70		70	70		70	70		70	70		70	70		70	70		69	69		68	68		67	67		65	62		64	58		62	55		61	52	
				Exposed	70	70		70	70		70	70		70	70		70	70		70	69		70	65		69	62		68	58		65	54		61	51		57	48		54	0		51	0	
		7:12	30.3	Non-Exposed	72	72	72	72	72	72	72	72	72	72	72	72	72	72	72	72	72	72	72	72	68	71	69	65	70	63	59	68	58	54	67	54	50	65	50	46	64	47	43	60	44	40
				Exposed	72	72	72	72	72	70	72	70	66	72	66	62	72	62	58	72	59	55	72	56	53	71	54	50	68	50	46	62	46	42	58	0	0	55	0	0	52	0	0	49	0	0
		8:12	33.7	Non-Exposed	74	74	74	74	74	74	74	74	74	74	74	74	74	74	74	74	74	72	74	72	68	73	69	65	72	62	59	70	58	54	68	54	50	67	50	46	64	47	43	60	44	40
				Exposed	74	74	74	74	74	70	74	70	66	74	65	62	74	62	58	74	59	55	74	56	53	73	54	50	67	49	46	62	46	42	58	0	0	55	0	0	52	0	0	49	0	0
		9:12	36.9	Non-Exposed	77	77	77	77	77	77	77	77	77	77	77	77	77	77	77	77	76	72	76	72	68	75	68	64	74	62	59	72	58	54	70	53	50	68	50	46	63	47	43	60	44	0
				Exposed	77	77	75	77	74	70	77	69	65	77	65	62	77	62	58	77	59	55	76	56	53	74	54	50	67	49	46	62	46	42	58	0	0	55	0	0	52	0	0	49	0	0
		10:12	39.8	Non-Exposed	79	79	79	79	79	79	79	79	79	79	79	79	79	79	76	79	76	72	79	72	68	78	68	64	76	62	59	74	58	54	72	53	50	68	50	46	63	47	43	60	44	0
				Exposed	79	79	75	79	74	70	79	69	65	79	65	61	79	62	58	79	59	55	77	56	52	73	54	50	67	49	46	62	46	42	58	0	0	55	0	0	52	0	0	49	0	0
		11:12	42.5	Non-Exposed	81	81	81	81	81	81	81	81	81	81	81	81	81	80	76	81	75	72	81	72	68	80	68	64	78	62	58	76	57	54	73	53	50	68	50	46	63	47	43	60	44	0
				Exposed	81	78	75	81	73	70	81	69	65	81	65	61	81	62	58	81	59	55	77	56	52	73	54	50	67	49	46	62	46	42	58	0	0	55	0	0	52	0	0	49	0	0
		12:12	45	Non-Exposed	84	84	84	84	84	84	84	84	84	84	84	81	84	79	76	84	75	72	84	71	68	83	68	64	81	62	58	78	57	54	73	53	50	68	50	46	63	47	43	60	44	0
				Exposed	84	78	75	84	73	70	84	69	65	84	65	61	84	62	58	80	59	55	77	56	52	73	54	50	67	49	46	62	46	42	58	0	0	55	0	0	52	0	0	49	0	0

Tamarack 2.3 Rail – Hip Flush-Mount on 30 Foot Maximum Mean Roof Height – Landscape – Panel Width = 45 Inches or Less

Ground Snow Load	Exposure Category	Roof Pitch	Roof Angle	Wind Speed (mph)	95			100			105			110			115			120			125			130			140			150			160			170			180			190		
				Roof Area	1	2	3	1	2	3	1	2	3	1	2	3	1	2	3	1	2	3	1	2	3	1	2	3	1	2	3	1	2	3	1	2	3	1	2	3	1	2	3	1	2	3
35	B	2:12	9.5	Non-Exposed	65	65	65	65	65	65	65	65	65	65	65	65	65	65	65	65	65	65	65	65	65	65	65	65	65	65	65	65	65	65	65	65	65	65	65	65	65	65	63	64	62	60
				Exposed	65	65	65	65	65	65	65	65	65	65	65	65	65	65	65	65	65	65	65	65	65	65	65	65	65	65	65	65	64	62	65	60	58	65	56	54	62	53	51	58	50	48
		3:12	14.0	Non-Exposed	62	62	62	62	62	62	62	62	62	62	62	62	62	62	62	62	62	62	62	62	62	62	62	62	62	62	62	62	62	62	62	62	62	62	62	62	62	62	62	62	62	59
				Exposed	62	62	62	62	62	62	62	62	62	62	62	62	62	62	62	62	62	62	62	62	62	62	62	62	62	62	62	62	62	61	62	60	58	62	56	54	62	53	51	58	50	48
		4:12	18.4	Non-Exposed	62	62	62	62	62	62	62	62	62	62	62	62	62	62	62	62	62	62	62	62	62	62	62	62	62	62	62	62	62	62	62	62	62	62	62	62	62	62	62	62	62	59
				Exposed	62	62	62	62	62	62	62	62	62	62	62	62	62	62	62	62	62	62	62	62	62	62	62	62	62	62	62	62	62	61	62	60	57	62	56	54	61	53	51	58	50	48
		5:12	22.6	Non-Exposed	63	63		63	63		63	63		63	63		63	63		63	63		63	63		63	63		63	63		63	63		63	63		63	63		63	63		63	63	
				Exposed	63	63		63	63		63	63		63	63		63	63		63	63		63	63		63	63		63	63		63	63		63	63		63	62		63	58		63	55	
		6:12	26.6	Non-Exposed	65	65		65	65		65	65		65	65		65	65		65	65		65	65		65	65		65	65		65	65		65	65		65	65		65	65		64	64	
				Exposed	65	65		65	65		65	65		65	65		65	65		65	65		65	65		65	65		65	65		65	65		65	65		65	61		65	58		64	55	
		7:12	30.3	Non-Exposed	67	67	67	67	67	67	67	67	67	67	67	67	67	67	67	67	67	67	67	67	67	67	67	67	67	67	67	67	67	67	67	67	67	67	67	63	66	63	59	65	59	55
				Exposed	67	67	67	67	67	67	67	67	67	67	67	67	67	67	67	67	67	67	67	67	67	67	67	67	67	67	63	67	61	58	67	57	53	67	53	49	66	50	46	63	47	43
		8:12	33.7	Non-Exposed	70	70	70	70	70	70	70	70	70	70	70	70	70	70	70	70	70	70	70	70	70	70	70	70	70	70	70	70	70	70	70	70	69	69	67	63	68	63	59	67	59	55
				Exposed	70	70	70	70	70	70	70	70	70	70	70	70	70	70	70	70	70	70	70	70	70	70	70	69	70	66	63	70	61	57	70	57	53	69	53	49	68	50	46	63	47	43
		9:12	36.9	Non-Exposed	73	73	73	73	73	73	73	73	73	73	73	73	73	73	73	73	73	73	73	73	73	73	73	73	73	73	73	73	73	73	73	72	69	72	67	63	70	62	59	69	59	55
				Exposed	73	73	73	73	73	73	73	73	73	73	73	73	73	73	73	73	73	73	73	73	73	73	73	69	73	66	62	73	61	57	73	57	53	72	53	49	67	49	46	63	47	43
		10:12	39.8	Non-Exposed	75	75	75	75	75	75	75	75	75	75	75	75	75	75	75	75	75	75	75	75	75	75	75	75	75	75	75	75	75	75	75	72	68	74	67	63	73	62	59	71	59	55
				Exposed	75	75	75	75	75	75	75	75	75	75	75	75	75	75	75	75	75	75	75	75	73	75	73	69	75	66	62	75	61	57	75	57	53	72	53	49	67	49	46	63	46	43
		11:12	42.5	Non-Exposed	78	78	78	78	78	78	78	78	78	78	78	78	78	78	78	78	78	78	78	78	78	78	78	78	78	78	78	78	78	75	78	72	68	77	67	63	75	62	59	74	59	55
				Exposed	78	78	78	78	78	78	78	78	78	78	78	78	78	78	78	78	78	77	78	76	73	78	73	69	78	66	62	78	61	57	77	56	53	72	53	49	67	49	46	63	46	43
		12:12	45	Non-Exposed	81	81	81	81	81	81	81	81	81	81	81	81	81	81	81	81	81	81	81	81	81	81	81	81	81	81	81	81	78	75	81	72	68	79	67	63	78	62	59	76	58	55
				Exposed	81	81	81	81	81	81	81	81	81	81	81	81	81	81	81	81	80	77	81	76	72	81	72	69	81	66	62	81	61	57	77	56	53	72	53	49	67	49	46	63	46	43
	C	2:12	9.5	Non-Exposed	65	65	65	65	65	65	65	65	65	65	65	65	65	65	65	65	65	65	65	65	65	65	65	65	65	65	65	65	65	64	64	62	60	63	58	56	62	55	53	60	52	50
				Exposed	65	65	65	65	65	65	65	65	65	65	65	65	65	65	65	65	65	65	65	65	62	65	63	60	65	58	56	63	54	52	59	51	48	55	47	0	52	0	0	49	0	0
		3:12	14.0	Non-Exposed	62	62	62	62	62	62	62	62	62	62	62	62	62	62	62	62	62	62	62	62	62	62	62	62	62	62	62	62	62	62	62	62	60	61	58	56	60	55	53	59	52	50
				Exposed	62	62	62	62	62	62	62	62	62	62	62	62	62	62	62	62	62	62	62	62	62	62	62	60	62	58	56	62	54	52	58	50	48	55	47	0	52	0	0	49	0	0
		4:12	18.4	Non-Exposed	62	62	62	62	62	62	62	62	62	62	62	62	62	62	62	62	62	62	62	62	62	62	62	62	62	62	62	62	62	62	62	62	59	61	58	56	60	55	53	59	52	50
				Exposed	62	62	62	62	62	62	62	62	62	62	62	62	62	62	62	62	62	62	62	62	62	62	62	60	62	58	55	62	54	52	58	50	48	55	47	0	52	0	0	49	0	0
		5:12	22.6	Non-Exposed	63	63		63	63		63	63		63	63		63	63		63	63		63	63		63	63		63	63		63	63		63	63		62	62		61	60		59	57	
				Exposed	63	63		63	63		63	63		63	63		63	63		63	63		63	63		63	63		63	63		63	59		63	55		62	52		59	49		56	46	
		6:12	26.6	Non-Exposed	65	65		65	65		65	65		65	65		65	65		65	65		65	65		65	65		65	65		65	65		64	64		63	63		62	60		61	57	
				Exposed	65	65		65	65		65	65		65	65		65	65		65	65		65	65		65	65		65	63		65	59		64	55		62	52		59	49		55	46	
		7:12	30.3	Non-Exposed	67	67	67	67	67	67	67	67	67	67	67	67	67	67	67	67	67	67	67	67	67	67	67	67	67	67	66	67	64	60	65	59	55	64	55	51	63	52	48	62	48	45
				Exposed	67	67	67	67	67	67	67	67	67	67	67	67	67	67	65	67	65	62	67	62	59	67	59	56	67	55	51	67	50	47	64	47	43	60	44	0	56	0	0	53	0	0
		8:12	33.7	Non-Exposed	70	70	70	70	70	70	70	70	70	70	70	70	70	70	70	70	70	70	70	70	70	70	70	70	70	69	66	69	64	60	67	59	55	66	55	51	65	52	48	63	48	45
				Exposed	70	70	70	70	70	70	70	70	70	70	70	69	70	69	65	70	65	61	70	62	58	70	59	56	70	54	51	69	50	47	64	47	43	60	44	0	56	0	0	53	0	0
		9:12	36.9	Non-Exposed	73	73	73	73	73	73	73	73	73	73	73	73	73	73	73	73	73	73	73	73	73	73	73	73	72	69	65	71	63	60	69	59	55	68	55	51	67	51	48	65	48	45
				Exposed	73	73	73	73	73	73	73	73	73	73	73	69	73	69	65	73	65	61	73	62	58	73	59	56	72	54	51	69	50	47	63	47	43	60	44	0	56	0	0	53	0	0
		10:12	39.8	Non-Exposed	75	75	75	75	75	75	75	75	75	75	75	75	75	75	75	75	75	75	75	75	75	75	75	72	75	69	65	73	63	60	72	59	55	70	55	51	68	51	48	66	48	45
				Exposed	75	75	75	75	75	75	75	75	73	75	73	69	75	69	65	75	65	61	75	62	58	75	59	55	74	54	51	68	50	47	63	47	43	60	44	0	56	0	0	53	0	0
		11:12	42.5	Non-Exposed	78	78	78	78	78	78	78	78	78	78	78	78	78	78	78	78	78	78	78	78	76	78	76	72	77	69	65	76	63	60	74	59	55	72	55	51	70	51	48	66	48	45
				Exposed	78	78	78	78	78	78	78	77	73	78	72	69	78	68	65	78	65	61	78	62	58	78	59	55	74	54	51	68	50	46	63	47	43	59	44	0	56	0	0	53	0	0
		12:12	45	Non-Exposed	81	81	81	81	81	81	81	81	81	81	81	81	81	81	81	81	81	80	81	79	76	81	76	72	80	69	65	78	63	59	76	59	55	74	55	51	70	51	48	65	48	45
				Exposed	81	81	81	81	81	78	81	77	73	81	72	68	81	68	64	81	65	61	81	62	58	81	59	55	74	54	51	68	50	46	63	47	43	59	43	0	56	0	0	53	0	0
	D	2:12	9.5	Non-Exposed	65	65	65	65	65	65	65	65	65	65	65	65	65	65	65	65	65	65	65	65	65	65	65	65	64	64	63	63	61	59	62	57	55	61	54	51	59	51	49	55	48	0
				Exposed	65	65	65	65	65	65	65	65	65	65	65	65	65	65	62	65	62	60	65	60	57	65	57	55	62	53	51	57	50	48	54	46	0	50	0	0	48	0	0	0	0	0
		3:12	14.0	Non-Exposed	62	62	62	62	62	62	62	62	62	62	62	62	62	62	62	62	62	62	62	62	62	62	62	62	62	62	62	61	61	58	60	57	55	59	54	51	58	50	48	55	48	0
				Exposed	62	62	62	62	62	62	62	62	62	62	62	62	62	62	62	62	62	60	62	60	57	62	57	55	61	53	51	57	49	47	54	46	0	50	0	0	0	0	0	0	0	0
		4:12	18.4	Non-Exposed	62	62	62	62	62	62	62	62	62	62	62	62	62	62	62	62	62	62	62	62	62	62	62	62	62	62	62	61	61	58	60	57	55	59	53	51	58	50	48	55	48	0
				Exposed	62	62	62	62	62	62	62	62	62	62	62	62	62	62	62	62	62	60	62	59	57	62	57	55	61	53	51	57	49	47	54	46	0	50	0	0	0	0	0	0	0	0
		5:12	22.6	Non-Exposed	63	63		63	63		63	63		63	63		63	63		63	63		63	63		63	63		63	63		62	62		61	61		60	59		59	55		58	52	
				Exposed	63	63		63	63		63	63		63	63		63	63		63	63		63	63		63	63		63	58		62	54		61	51		57	48		54	0		51	0	
		6:12	26.6	Non-Exposed	65	65		65	65		65	65		65	65		65	65		65	65		65	65		65	65		65	65		63	63		62	62		61	58		60	55		59	52	
				Exposed	65	65		65	65		65	65		65	65		65	65		65	65		65	65		65	62		65	58		63	54		61	51		57	48		54	0		51	0	
		7:12	30.3	Non-Exposed	67	67	67	67	67	67	67	67	67	67	67	67	67	67	67	67	67	67	67	67	67	67	67	65	66	63	59	65	58	54	64	54	50	62	50	46	61	47	43	60	44	40
				Exposed	67	67	67	67	67	67	67	67	66	67	66	62	67	62	58	67	59	55	67	56	53	67	54	50	66	50	46	62	46	42	58	0	0	55	0	0	52	0	0	49	0	0
		8:12	33.7	Non-Exposed	70	70	70	70	70	70	70	70	70	70	70	70	70	70	70	70	70	70	70	70	68	70	69	65	68	62	59	67	58	54	65	54	50	64	50	46	63	47	43	60	44	40
				Exposed	70	70	70	70	70	70	70	70	66	70	65	62	70	62	58	70	59	55	70	56	53	70	54	50	67	49	46	62	46	42	58	0	0	55	0	0	52	0	0	49	0	0
		9:12	36.9	Non-Exposed	73	73	73	73	73	73	73	73	73	73	73	73	73	73	73	73	73	72	73	72	68	72	68	64	70	62	59	69	58	54	67	53	50	66	50	46	63	47	43	60	44	0
				Exposed	73	73	73	73	73	70	73	69	65	73	65	62	73	62	58	73	59	55	73	56	53	72	54	50	67	49	46	62	46	42	58	0	0	55	0	0	52	0	0	49	0	0
		10:12	39.8	Non-Exposed	75	75	75	75	75	75	75	75	75	75	75	75	75	75	75	75	75	72	75	72	68	74	68	64	73	62	59	71	58	54	69	53	50	68	50	46	63	47	43	60	44	0
				Exposed	75	75	75	75	74	70	75	69	65	75	65	61	75	62	58	75	59	55	75	56	52	73	54	50	67	49	46	62	46	42	58	0	0	55	0	0	52	0	0	49	0	0
		11:12	42.5	Non-Exposed	78	78	78	78	78	78	78	78	78	78	78	78	78	78	76	78	75	72	78	72	68	77	68	64	75	62	58	73	57	54	72	53	50	68	50	46	63	47	43	60	44	0
				Exposed	78	78	75	78	73	70	78	69	65	78	65	61	78	62	58	78	59	55	77	56	52	73	54	50	67	49	46	62	46	42	58	0	0	55	0	0	52	0	0	49	0	0
		12:12	45	Non-Exposed	81	81	81	81	81	81	81	81	81	81	81	81	81	79	76	81	75	72	81	71	68	80	68	64	78	62	58	76	57	54	73	53	50	68	50	46	63	47	43	60	44	0
				Exposed	81	78	75	81	73	70	81	69	65	81	65	61	81	62	58	80	59	55	77	56	52	73	54	50	67	49	46	62	46	42	58	0	0	55	0	0	52	0	0	49	0	0

Tamarack 2.3 Rail – Hip Flush-Mount on 30 Foot Maximum Mean Roof Height – Landscape – Panel Width = 45 Inches or Less

Ground Snow Load	Exposure Category	Roof Pitch	Roof Angle	Wind Speed (mph)	95			100			105			110			115			120			125			130			140			150			160			170			180			190		
				Roof Area	1	2	3	1	2	3	1	2	3	1	2	3	1	2	3	1	2	3	1	2	3	1	2	3	1	2	3	1	2	3	1	2	3	1	2	3	1	2	3	1	2	3
40	B	2:12	9.5	Non-Exposed	61	61	61	61	61	61	61	61	61	61	61	61	61	61	61	61	61	61	61	61	61	61	61	61	61	61	61	61	61	61	61	61	61	61	61	61	61	61	61	61	61	60
				Exposed	61	61	61	61	61	61	61	61	61	61	61	61	61	61	61	61	61	61	61	61	61	61	61	61	61	61	61	61	61	61	61	60	58	61	56	54	61	53	51	58	50	48
		3:12	14.0	Non-Exposed	58	58	58	58	58	58	58	58	58	58	58	58	58	58	58	58	58	58	58	58	58	58	58	58	58	58	58	58	58	58	58	58	58	58	58	58	58	58	58	58	58	58
				Exposed	58	58	58	58	58	58	58	58	58	58	58	58	58	58	58	58	58	58	58	58	58	58	58	58	58	58	58	58	58	58	58	58	58	58	56	54	58	53	51	58	50	48
		4:12	18.4	Non-Exposed	58	58	58	58	58	58	58	58	58	58	58	58	58	58	58	58	58	58	58	58	58	58	58	58	58	58	58	58	58	58	58	58	58	58	58	58	58	58	58	58	58	58
				Exposed	58	58	58	58	58	58	58	58	58	58	58	58	58	58	58	58	58	58	58	58	58	58	58	58	58	58	58	58	58	58	58	58	57	58	56	54	58	53	51	58	50	48
		5:12	22.6	Non-Exposed	59	59		59	59		59	59		59	59		59	59		59	59		59	59		59	59		59	59		59	59		59	59		59	59		59	59		59	59	
				Exposed	59	59		59	59		59	59		59	59		59	59		59	59		59	59		59	59		59	59		59	59		59	59		59	59		59	58		59	55	
		6:12	26.6	Non-Exposed	61	61		61	61		61	61		61	61		61	61		61	61		61	61		61	61		61	61		61	61		61	61		61	61		61	61		61	61	
				Exposed	61	61		61	61		61	61		61	61		61	61		61	61		61	61		61	61		61	61		61	61		61	61		61	61		61	58		61	55	
		7:12	30.3	Non-Exposed	63	63	63	63	63	63	63	63	63	63	63	63	63	63	63	63	63	63	63	63	63	63	63	63	63	63	63	63	63	63	63	63	63	63	63	63	63	63	59	63	59	55
				Exposed	63	63	63	63	63	63	63	63	63	63	63	63	63	63	63	63	63	63	63	63	63	63	63	63	63	63	63	63	61	58	63	57	53	63	53	49	63	50	46	63	47	43
		8:12	33.7	Non-Exposed	66	66	66	66	66	66	66	66	66	66	66	66	66	66	66	66	66	66	66	66	66	66	66	66	66	66	66	66	66	66	66	66	66	66	66	63	65	63	59	64	59	55
				Exposed	66	66	66	66	66	66	66	66	66	66	66	66	66	66	66	66	66	66	66	66	66	66	66	66	66	66	63	66	61	57	66	57	53	66	53	49	65	50	46	63	47	43
		9:12	36.9	Non-Exposed	69	69	69	69	69	69	69	69	69	69	69	69	69	69	69	69	69	69	69	69	69	69	69	69	69	69	69	69	69	69	69	69	69	69	67	63	67	62	59	66	59	55
				Exposed	69	69	69	69	69	69	69	69	69	69	69	69	69	69	69	69	69	69	69	69	69	69	69	69	69	66	62	69	61	57	69	57	53	69	53	49	67	49	46	63	47	43
		10:12	39.8	Non-Exposed	72	72	72	72	72	72	72	72	72	72	72	72	72	72	72	72	72	72	72	72	72	72	72	72	72	72	72	72	72	72	72	72	68	71	67	63	70	62	59	69	59	55
				Exposed	72	72	72	72	72	72	72	72	72	72	72	72	72	72	72	72	72	72	72	72	72	72	72	69	72	66	62	72	61	57	72	57	53	71	53	49	67	49	46	63	46	43
		11:12	42.5	Non-Exposed	75	75	75	75	75	75	75	75	75	75	75	75	75	75	75	75	75	75	75	75	75	75	75	75	75	75	75	75	75	75	75	72	68	74	67	63	72	62	59	71	59	55
				Exposed	75	75	75	75	75	75	75	75	75	75	75	75	75	75	75	75	75	75	75	75	73	75	73	69	75	66	62	75	61	57	75	56	53	72	53	49	67	49	46	63	46	43
		12:12	45	Non-Exposed	78	78	78	78	78	78	78	78	78	78	78	78	78	78	78	78	78	78	78	78	78	78	78	78	78	78	78	78	78	75	78	72	68	76	67	63	75	62	59	73	58	55
				Exposed	78	78	78	78	78	78	78	78	78	78	78	78	78	78	78	78	78	77	78	76	72	78	72	69	78	66	62	78	61	57	77	56	53	72	53	49	67	49	46	63	46	43
	C	2:12	9.5	Non-Exposed	61	61	61	61	61	61	61	61	61	61	61	61	61	61	61	61	61	61	61	61	61	61	61	61	61	61	61	61	61	61	61	61	60	60	58	56	59	55	53	58	52	50
				Exposed	61	61	61	61	61	61	61	61	61	61	61	61	61	61	61	61	61	61	61	61	61	61	61	60	61	58	56	61	54	52	59	51	48	55	47	0	52	0	0	49	0	0
		3:12	14.0	Non-Exposed	58	58	58	58	58	58	58	58	58	58	58	58	58	58	58	58	58	58	58	58	58	58	58	58	58	58	58	58	58	58	58	58	58	58	58	56	57	55	53	56	52	50
				Exposed	58	58	58	58	58	58	58	58	58	58	58	58	58	58	58	58	58	58	58	58	58	58	58	58	58	58	56	58	54	52	58	50	48	55	47	0	52	0	0	49	0	0
		4:12	18.4	Non-Exposed	58	58	58	58	58	58	58	58	58	58	58	58	58	58	58	58	58	58	58	58	58	58	58	58	58	58	58	58	58	58	58	58	58	58	58	56	57	55	53	56	52	50
				Exposed	58	58	58	58	58	58	58	58	58	58	58	58	58	58	58	58	58	58	58	58	58	58	58	58	58	58	55	58	54	52	58	50	48	55	47	0	52	0	0	49	0	0
		5:12	22.6	Non-Exposed	59	59		59	59		59	59		59	59		59	59		59	59		59	59		59	59		59	59		59	59		59	59		59	59		58	58		57	57	
				Exposed	59	59		59	59		59	59		59	59		59	59		59	59		59	59		59	59		59	59		59	59		59	55		59	52		58	49		56	46	
		6:12	26.6	Non-Exposed	61	61		61	61		61	61		61	61		61	61		61	61		61	61		61	61		61	61		61	61		61	61		60	60		59	59		58	57	
				Exposed	61	61		61	61		61	61		61	61		61	61		61	61		61	61		61	61		61	61		61	59		61	55		60	52		59	49		55	46	
		7:12	30.3	Non-Exposed	63	63	63	63	63	63	63	63	63	63	63	63	63	63	63	63	63	63	63	63	63	63	63	63	63	63	63	63	63	60	63	59	55	62	55	51	60	52	48	59	48	45
				Exposed	63	63	63	63	63	63	63	63	63	63	63	63	63	63	63	63	63	62	63	62	59	63	59	56	63	55	51	63	50	47	63	47	43	60	44	0	56	0	0	53	0	0
		8:12	33.7	Non-Exposed	66	66	66	66	66	66	66	66	66	66	66	66	66	66	66	66	66	66	66	66	66	66	66	66	66	66	66	66	64	60	64	59	55	63	55	51	62	52	48	61	48	45
				Exposed	66	66	66	66	66	66	66	66	66	66	66	66	66	66	65	66	65	61	66	62	58	66	59	56	66	54	51	66	50	47	64	47	43	60	44	0	56	0	0	53	0	0
		9:12	36.9	Non-Exposed	69	69	69	69	69	69	69	69	69	69	69	69	69	69	69	69	69	69	69	69	69	69	69	69	69	69	65	68	63	60	67	59	55	65	55	51	64	51	48	63	48	45
				Exposed	69	69	69	69	69	69	69	69	69	69	69	69	69	69	65	69	65	61	69	62	58	69	59	56	69	54	51	68	50	47	63	47	43	60	44	0	56	0	0	53	0	0
		10:12	39.8	Non-Exposed	72	72	72	72	72	72	72	72	72	72	72	72	72	72	72	72	72	72	72	72	72	72	72	72	71	69	65	70	63	60	69	59	55	67	55	51	66	51	48	65	48	45
				Exposed	72	72	72	72	72	72	72	72	72	72	72	69	72	69	65	72	65	61	72	62	58	72	59	55	71	54	51	68	50	47	63	47	43	60	44	0	56	0	0	53	0	0
		11:12	42.5	Non-Exposed	75	75	75	75	75	75	75	75	75	75	75	75	75	75	75	75	75	75	75	75	75	75	75	72	74	69	65	73	63	60	71	59	55	70	55	51	68	51	48	66	48	45
				Exposed	75	75	75	75	75	75	75	75	73	75	72	69	75	68	65	75	65	61	75	62	58	75	59	55	74	54	51	68	50	46	63	47	43	59	44	0	56	0	0	53	0	0
		12:12	45	Non-Exposed	78	78	78	78	78	78	78	78	78	78	78	78	78	78	78	78	78	78	78	78	76	78	76	72	77	69	65	75	63	59	74	59	55	72	55	51	70	51	48	65	48	45
				Exposed	78	78	78	78	78	78	78	77	73	78	72	68	78	68	64	78	65	61	78	62	58	78	59	55	74	54	51	68	50	46	63	47	43	59	43	0	56	0	0	53	0	0
	D	2:12	9.5	Non-Exposed	61	61	61	61	61	61	61	61	61	61	61	61	61	61	61	61	61	61	61	61	61	61	61	61	61	61	61	61	61	59	60	57	55	58	54	51	57	51	49	55	48	0
				Exposed	61	61	61	61	61	61	61	61	61	61	61	61	61	61	61	61	61	60	61	60	57	61	57	55	61	53	51	57	50	48	54	46	0	50	0	0	48	0	0	0	0	0
		3:12	14.0	Non-Exposed	58	58	58	58	58	58	58	58	58	58	58	58	58	58	58	58	58	58	58	58	58	58	58	58	58	58	58	58	58	58	58	57	55	57	54	51	56	50	48	55	48	0
				Exposed	58	58	58	58	58	58	58	58	58	58	58	58	58	58	58	58	58	58	58	58	57	58	57	55	58	53	51	57	49	47	54	46	0	50	0	0	0	0	0	0	0	0
		4:12	18.4	Non-Exposed	58	58	58	58	58	58	58	58	58	58	58	58	58	58	58	58	58	58	58	58	58	58	58	58	58	58	58	58	58	58	58	57	55	57	53	51	56	50	48	55	48	0
				Exposed	58	58	58	58	58	58	58	58	58	58	58	58	58	58	58	58	58	58	58	58	57	58	57	55	58	53	51	57	49	47	54	46	0	50	0	0	0	0	0	0	0	0
		5:12	22.6	Non-Exposed	59	59		59	59		59	59		59	59		59	59		59	59		59	59		59	59		59	59		59	59		59	59		58	58		57	55		56	52	
				Exposed	59	59		59	59		59	59		59	59		59	59		59	59		59	59		59	59		59	58		59	54		59	51		57	48		54	0		51	0	
		6:12	26.6	Non-Exposed	61	61		61	61		61	61		61	61		61	61		61	61		61	61		61	61		61	61		61	61		60	60		59	58		58	55		57	52	
				Exposed	61	61		61	61		61	61		61	61		61	61		61	61		61	61		61	61		61	58		61	54		60	51		57	48		54	0		51	0	
		7:12	30.3	Non-Exposed	63	63	63	63	63	63	63	63	63	63	63	63	63	63	63	63	63	63	63	63	63	63	63	63	63	63	59	62	58	54	61	54	50	60	50	46	59	47	43	58	44	40
				Exposed	63	63	63	63	63	63	63	63	63	63	63	62	63	62	58	63	59	55	63	56	53	63	54	50	63	50	46	62	46	42	58	0	0	55	0	0	52	0	0	49	0	0
		8:12	33.7	Non-Exposed	66	66	66	66	66	66	66	66	66	66	66	66	66	66	66	66	66	66	66	66	66	66	66	65	65	62	59	64	58	54	63	54	50	62	50	46	60	47	43	59	44	40
				Exposed	66	66	66	66	66	66	66	66	66	66	65	62	66	62	58	66	59	55	66	56	53	66	54	50	65	49	46	62	46	42	58	0	0	55	0	0	52	0	0	49	0	0
		9:12	36.9	Non-Exposed	69	69	69	69	69	69	69	69	69	69	69	69	69	69	69	69	69	69	69	69	68	69	68	64	67	62	59	66	58	54	65	53	50	63	50	46	62	47	43	60	44	0
				Exposed	69	69	69	69	69	69	69	69	65	69	65	62	69	62	58	69	59	55	69	56	53	69	54	50	67	49	46	62	46	42	58	0	0	55	0	0	52	0	0	49	0	0
		10:12	39.8	Non-Exposed	72	72	72	72	72	72	72	72	72	72	72	72	72	72	72	72	72	72	72	72	68	71	68	64	70	62	59	68	58	54	67	53	50	65	50	46	63	47	43	60	44	0
				Exposed	72	72	72	72	72	70	72	69	65	72	65	61	72	62	58	72	59	55	72	56	52	71	54	50	67	49	46	62	46	42	58	0	0	55	0	0	52	0	0	49	0	0
		11:12	42.5	Non-Exposed	75	75	75	75	75	75	75	75	75	75	75	75	75	75	75	75	75	72	75	72	68	74	68	64	72	62	58	71	57	54	69	53	50	67	50	46	63	47	43	60	44	0
				Exposed	75	75	75	75	73	70	75	69	65	75	65	61	75	62	58	75	59	55	75	56	52	73	54	50	67	49	46	62	46	42	58	0	0	55	0	0	52	0	0	49	0	0
		12:12	45	Non-Exposed	78	78	78	78	78	78	78	78	78	78	78	78	78	78	76	78	75	72	77	71	68	77	68	64	75	62	58	73	57	54	71	53	50	68	50	46	63	47	43	60	44	0
				Exposed	78	78	75	78	73	70	78	69	65	78	65	61	78	62	58	78	59	55	77	56	52	73	54	50	67	49	46	62	46	42	58	0	0	55	0	0	52	0	0	49	0	0

Tamarack 2.3 Rail – Hip Flush-Mount on 30 Foot Maximum Mean Roof Height – Landscape – Panel Width = 45 Inches or Less

Ground Snow Load	Exposure Category	Roof Pitch	Roof Angle	Wind Speed (mph)	95			100			105			110			115			120			125			130			140			150			160			170			180			190		
				Roof Area	1	2	3	1	2	3	1	2	3	1	2	3	1	2	3	1	2	3	1	2	3	1	2	3	1	2	3	1	2	3	1	2	3	1	2	3	1	2	3	1	2	3
45	B	2:12	9.5	Non-Exposed	57	57	57	57	57	57	57	57	57	57	57	57	57	57	57	57	57	57	57	57	57	57	57	57	57	57	57	57	57	57	57	57	57	57	57	57	57	57	57	57	57	57
				Exposed	57	57	57	57	57	57	57	57	57	57	57	57	57	57	57	57	57	57	57	57	57	57	57	57	57	57	57	57	57	57	57	57	57	57	56	54	57	53	51	57	50	48
		3:12	14.0	Non-Exposed	55	55	55	55	55	55	55	55	55	55	55	55	55	55	55	55	55	55	55	55	55	55	55	55	55	55	55	55	55	55	55	55	55	55	55	55	55	55	55	55	55	55
				Exposed	55	55	55	55	55	55	55	55	55	55	55	55	55	55	55	55	55	55	55	55	55	55	55	55	55	55	55	55	55	55	55	55	55	55	55	54	55	53	51	55	50	48
		4:12	18.4	Non-Exposed	55	55	55	55	55	55	55	55	55	55	55	55	55	55	55	55	55	55	55	55	55	55	55	55	55	55	55	55	55	55	55	55	55	55	55	55	55	55	55	55	55	55
				Exposed	55	55	55	55	55	55	55	55	55	55	55	55	55	55	55	55	55	55	55	55	55	55	55	55	55	55	55	55	55	55	55	55	55	55	55	54	55	53	51	55	50	48
		5:12	22.6	Non-Exposed	56	56		56	56		56	56		56	56		56	56		56	56		56	56		56	56		56	56		56	56		56	56		56	56		56	56		56	56	
				Exposed	56	56		56	56		56	56		56	56		56	56		56	56		56	56		56	56		56	56		56	56		56	56		56	56		56	56		56	55	
		6:12	26.6	Non-Exposed	58	58		58	58		58	58		58	58		58	58		58	58		58	58		58	58		58	58		58	58		58	58		58	58		58	58		58	58	
				Exposed	58	58		58	58		58	58		58	58		58	58		58	58		58	58		58	58		58	58		58	58		58	58		58	58		58	58		58	55	
		7:12	30.3	Non-Exposed	60	60	60	60	60	60	60	60	60	60	60	60	60	60	60	60	60	60	60	60	60	60	60	60	60	60	60	60	60	60	60	60	60	60	60	60	60	59	60	59	55
				Exposed	60	60	60	60	60	60	60	60	60	60	60	60	60	60	60	60	60	60	60	60	60	60	60	60	60	60	60	60	60	58	60	57	53	60	53	49	60	50	46	60	47	43
		8:12	33.7	Non-Exposed	63	63	63	63	63	63	63	63	63	63	63	63	63	63	63	63	63	63	63	63	63	63	63	63	63	63	63	63	63	63	63	63	63	63	63	63	63	63	59	62	59	55
				Exposed	63	63	63	63	63	63	63	63	63	63	63	63	63	63	63	63	63	63	63	63	63	63	63	63	63	63	63	63	61	57	63	57	53	63	53	49	63	50	46	62	47	43
		9:12	36.9	Non-Exposed	65	65	65	65	65	65	65	65	65	65	65	65	65	65	65	65	65	65	65	65	65	65	65	65	65	65	65	65	65	65	65	65	65	65	65	63	65	62	59	64	59	55
				Exposed	65	65	65	65	65	65	65	65	65	65	65	65	65	65	65	65	65	65	65	65	65	65	65	65	65	65	62	65	61	57	65	57	53	65	53	49	65	49	46	63	47	43
		10:12	39.8	Non-Exposed	69	69	69	69	69	69	69	69	69	69	69	69	69	69	69	69	69	69	69	69	69	69	69	69	69	69	69	69	69	69	69	69	68	68	67	63	67	62	59	66	59	55
				Exposed	69	69	69	69	69	69	69	69	69	69	69	69	69	69	69	69	69	69	69	69	69	69	69	69	69	66	62	69	61	57	69	57	53	68	53	49	67	49	46	63	46	43
		11:12	42.5	Non-Exposed	72	72	72	72	72	72	72	72	72	72	72	72	72	72	72	72	72	72	72	72	72	72	72	72	72	72	72	72	72	72	72	72	68	71	67	63	70	62	59	69	59	55
				Exposed	72	72	72	72	72	72	72	72	72	72	72	72	72	72	72	72	72	72	72	72	72	72	72	69	72	66	62	72	61	57	72	56	53	71	53	49	67	49	46	63	46	43
		12:12	45	Non-Exposed	75	75	75	75	75	75	75	75	75	75	75	75	75	75	75	75	75	75	75	75	75	75	75	75	75	75	75	75	75	75	75	72	68	74	67	63	72	62	59	71	58	55
				Exposed	75	75	75	75	75	75	75	75	75	75	75	75	75	75	75	75	75	75	75	75	72	75	72	69	75	66	62	75	61	57	75	56	53	72	53	49	67	49	46	63	46	43
	C	2:12	9.5	Non-Exposed	57	57	57	57	57	57	57	57	57	57	57	57	57	57	57	57	57	57	57	57	57	57	57	57	57	57	57	57	57	57	57	57	57	57	57	56	57	55	53	56	52	50
				Exposed	57	57	57	57	57	57	57	57	57	57	57	57	57	57	57	57	57	57	57	57	57	57	57	57	57	57	56	57	54	52	57	51	48	55	47	0	52	0	0	49	0	0
		3:12	14.0	Non-Exposed	55	55	55	55	55	55	55	55	55	55	55	55	55	55	55	55	55	55	55	55	55	55	55	55	55	55	55	55	55	55	55	55	55	55	55	55	55	55	53	54	52	50
				Exposed	55	55	55	55	55	55	55	55	55	55	55	55	55	55	55	55	55	55	55	55	55	55	55	55	55	55	55	55	54	52	55	50	48	55	47	0	52	0	0	49	0	0
		4:12	18.4	Non-Exposed	55	55	55	55	55	55	55	55	55	55	55	55	55	55	55	55	55	55	55	55	55	55	55	55	55	55	55	55	55	55	55	55	55	55	55	55	55	55	53	54	52	50
				Exposed	55	55	55	55	55	55	55	55	55	55	55	55	55	55	55	55	55	55	55	55	55	55	55	55	55	55	55	55	54	52	55	50	48	55	47	0	52	0	0	49	0	0
		5:12	22.6	Non-Exposed	56	56		56	56		56	56		56	56		56	56		56	56		56	56		56	56		56	56		56	56		56	56		56	56		56	56		55	55	
				Exposed	56	56		56	56		56	56		56	56		56	56		56	56		56	56		56	56		56	56		56	56		56	55		56	52		56	49		55	46	
		6:12	26.6	Non-Exposed	58	58		58	58		58	58		58	58		58	58		58	58		58	58		58	58		58	58		58	58		58	58		58	58		57	57		56	56	
				Exposed	58	58		58	58		58	58		58	58		58	58		58	58		58	58		58	58		58	58		58	58		58	55		58	52		57	49		55	46	
45		7:12	30.3	Non-Exposed	60	60	60	60	60	60	60	60	60	60	60	60	60	60	60	60	60	60	60	60	60	60	60	60	60	60	60	60	60	60	60	59	55	59	55	51	58	52	48	57	48	45
				Exposed	60	60	60	60	60	60	60	60	60	60	60	60	60	60	60	60	60	60	60	60	59	60	59	56	60	55	51	60	50	47	60	47	43	59	44	0	56	0	0	53	0	0
		8:12	33.7	Non-Exposed	63	63	63	63	63	63	63	63	63	63	63	63	63	63	63	63	63	63	63	63	63	63	63	63	63	63	63	63	63	60	62	59	55	61	55	51	60	52	48	59	48	45
				Exposed	63	63	63	63	63	63	63	63	63	63	63	63	63	63	63	63	63	61	63	62	58	63	59	56	63	54	51	63	50	47	62	47	43	60	44	0	56	0	0	53	0	0
		9:12	36.9	Non-Exposed	65	65	65	65	65	65	65	65	65	65	65	65	65	65	65	65	65	65	65	65	65	65	65	65	65	65	65	65	63	60	64	59	55	63	55	51	62	51	48	61	48	45
				Exposed	65	65	65	65	65	65	65	65	65	65	65	65	65	65	65	65	65	61	65	62	58	65	59	56	65	54	51	65	50	47	63	47	43	60	44	0	56	0	0	53	0	0
		10:12	39.8	Non-Exposed	69	69	69	69	69	69	69	69	69	69	69	69	69	69	69	69	69	69	69	69	69	69	69	69	69	69	65	67	63	60	66	59	55	65	55	51	64	51	48	63	48	45
				Exposed	69	69	69	69	69	69	69	69	69	69	69	69	69	69	65	69	65	61	69	62	58	69	59	55	69	54	51	67	50	47	63	47	43	60	44	0	56	0	0	53	0	0
		11:12	42.5	Non-Exposed	72	72	72	72	72	72	72	72	72	72	72	72	72	72	72	72	72	72	72	72	72	72	72	72	71	69	65	70	63	60	69	59	55	67	55	51	66	51	48	65	48	45
				Exposed	72	72	72	72	72	72	72	72	72	72	72	69	72	68	65	72	65	61	72	62	58	72	59	55	71	54	51	68	50	46	63	47	43	59	44	0	56	0	0	53	0	0
		12:12	45	Non-Exposed	75	75	75	75	75	75	75	75	75	75	75	75	75	75	75	75	75	75	75	75	75	75	75	72	74	69	65	73	63	59	71	59	55	70	55	51	68	51	48	65	48	45
				Exposed	75	75	75	75	75	75	75	75	73	75	72	68	75	68	64	75	65	61	75	62	58	75	59	55	74	54	51	68	50	46	63	47	43	59	43	0	56	0	0	53	0	0
	D	2:12	9.5	Non-Exposed	57	57	57	57	57	57	57	57	57	57	57	57	57	57	57	57	57	57	57	57	57	57	57	57	57	57	57	57	57	57	57	57	55	56	54	51	55	51	49	54	48	0
				Exposed	57	57	57	57	57	57	57	57	57	57	57	57	57	57	57	57	57	57	57	57	57	57	57	55	57	53	51	57	50	48	54	46	0	50	0	0	48	0	0	0	0	0
		3:12	14.0	Non-Exposed	55	55	55	55	55	55	55	55	55	55	55	55	55	55	55	55	55	55	55	55	55	55	55	55	55	55	55	55	55	55	55	55	55	55	54	51	54	50	48	53	48	0
				Exposed	55	55	55	55	55	55	55	55	55	55	55	55	55	55	55	55	55	55	55	55	55	55	55	55	55	53	51	55	49	47	54	46	0	50	0	0	0	0	0	0	0	0
		4:12	18.4	Non-Exposed	55	55	55	55	55	55	55	55	55	55	55	55	55	55	55	55	55	55	55	55	55	55	55	55	55	55	55	55	55	55	55	55	55	55	53	51	54	50	48	53	48	0
				Exposed	55	55	55	55	55	55	55	55	55	55	55	55	55	55	55	55	55	55	55	55	55	55	55	55	55	53	51	55	49	47	54	46	0	50	0	0	0	0	0	0	0	0
		5:12	22.6	Non-Exposed	56	56		56	56		56	56		56	56		56	56		56	56		56	56		56	56		56	56		56	56		56	56		55	55		55	55		54	52	
				Exposed	56	56		56	56		56	56		56	56		56	56		56	56		56	56		56	56		56	56		56	54		56	51		55	48		54	0		51	0	
		6:12	26.6	Non-Exposed	58	58		58	58		58	58		58	58		58	58		58	58		58	58		58	58		58	58		58	58		57	57		57	57		56	55		55	52	
				Exposed	58	58		58	58		58	58		58	58		58	58		58	58		58	58		58	58		58	58		58	54		57	51		57	48		54	0		51	0	
		7:12	30.3	Non-Exposed	60	60	60	60	60	60	60	60	60	60	60	60	60	60	60	60	60	60	60	60	60	60	60	60	60	60	59	60	58	54	59	54	50	58	50	46	57	47	43	56	44	40
				Exposed	60	60	60	60	60	60	60	60	60	60	60	60	60	60	58	60	59	55	60	56	53	60	54	50	60	50	46	60	46	42	58	0	0	55	0	0	52	0	0	49	0	0
		8:12	33.7	Non-Exposed	63	63	63	63	63	63	63	63	63	63	63	63	63	63	63	63	63	63	63	63	63	63	63	63	63	62	59	62	58	54	61	54	50	59	50	46	58	47	43	57	44	40
				Exposed	63	63	63	63	63	63	63	63	63	63	63	62	63	62	58	63	59	55	63	56	53	63	54	50	63	49	46	62	46	42	58	0	0	55	0	0	52	0	0	49	0	0
		9:12	36.9	Non-Exposed	65	65	65	65	65	65	65	65	65	65	65	65	65	65	65	65	65	65	65	65	65	65	65	64	65	62	59	64	58	54	62	53	50	61	50	46	60	47	43	59	44	0
				Exposed	65	65	65	65	65	65	65	65	65	65	65	62	65	62	58	65	59	55	65	56	53	65	54	50	65	49	46	62	46	42	58	0	0	55	0	0	52	0	0	49	0	0
		10:12	39.8	Non-Exposed	69	69	69	69	69	69	69	69	69	69	69	69	69	69	69	69	69	69	69	69	68	69	68	64	67	62	59	66	58	54	65	53	50	63	50	46	62	47	43	60	44	0
				Exposed	69	69	69	69	69	69	69	69	65	69	65	61	69	62	58	69	59	55	69	56	52	69	54	50	67	49	46	62	46	42	58	0	0	55	0	0	52	0	0	49	0	0
		11:12	42.5	Non-Exposed	72	72	72	72	72	72	72	72	72	72	72	72	72	72	72	72	72	72	72	72	68	71	68	64	70	62	58	68	57	54	67	53	50	65	50	46	63	47	43	60	44	0
				Exposed	72	72	72	72	72	70	72	69	65	72	65	61	72	62	58	72	59	55	72	56	52	71	54	50	67	49	46	62	46	42	58	0	0	55	0	0	52	0	0	49	0	0
		12:12	45	Non-Exposed	75	75	75	75	75	75	75	75	75	75	75	75	75	75	75	75	75	72	75	71	68	74	68	64	72	62	58	71	57	54	69	53	50	67	50	46	63	47	43	60	44	0
				Exposed	75	75	75	75	73	70	75	69	65	75	65	61	75	62	58	75	59	55	75	56	52	73	54	50	67	49	46	62	46	42	58	0	0	55	0	0	52	0	0	49	0	0

Tamarack 2.3 Rail – Hip Flush-Mount on 30 Foot Maximum Mean Roof Height – Landscape – Panel Width = 45 Inches or Less

Ground Snow Load	Exposure Category	Roof Pitch	Roof Angle	Wind Speed (mph)	95			100			105			110			115			120			125			130			140			150			160			170			180			190		
				Roof Area	1	2	3	1	2	3	1	2	3	1	2	3	1	2	3	1	2	3	1	2	3	1	2	3	1	2	3	1	2	3	1	2	3	1	2	3	1	2	3	1	2	3
50	B	2:12	9.5	Non-Exposed	55	55	55	55	55	55	55	55	55	55	55	55	55	55	55	55	55	55	55	55	55	55	55	55	55	55	55	55	55	55	55	55	55	55	55	55	55	55	55	55	55	55
				Exposed	55	55	55	55	55	55	55	55	55	55	55	55	55	55	55	55	55	55	55	55	55	55	55	55	55	55	55	55	55	55	55	55	55	55	55	54	55	53	51	55	50	48
		3:12	14.0	Non-Exposed	52	52	52	52	52	52	52	52	52	52	52	52	52	52	52	52	52	52	52	52	52	52	52	52	52	52	52	52	52	52	52	52	52	52	52	52	52	52	52	52	52	52
				Exposed	52	52	52	52	52	52	52	52	52	52	52	52	52	52	52	52	52	52	52	52	52	52	52	52	52	52	52	52	52	52	52	52	52	52	52	52	52	52	51	52	50	48
		4:12	18.4	Non-Exposed	52	52	52	52	52	52	52	52	52	52	52	52	52	52	52	52	52	52	52	52	52	52	52	52	52	52	52	52	52	52	52	52	52	52	52	52	52	52	52	52	52	52
				Exposed	52	52	52	52	52	52	52	52	52	52	52	52	52	52	52	52	52	52	52	52	52	52	52	52	52	52	52	52	52	52	52	52	52	52	52	52	52	52	51	52	50	48
		5:12	22.6	Non-Exposed	54	54		54	54		54	54		54	54		54	54		54	54		54	54		54	54		54	54		54	54		54	54		54	54		54	54		54	54	
				Exposed	54	54		54	54		54	54		54	54		54	54		54	54		54	54		54	54		54	54		54	54		54	54		54	54		54	54		54	54	
		6:12	26.6	Non-Exposed	55	55		55	55		55	55		55	55		55	55		55	55		55	55		55	55		55	55		55	55		55	55		55	55		55	55		55	55	
				Exposed	55	55		55	55		55	55		55	55		55	55		55	55		55	55		55	55		55	55		55	55		55	55		55	55		55	55		55	55	
		7:12	30.3	Non-Exposed	57	57	57	57	57	57	57	57	57	57	57	57	57	57	57	57	57	57	57	57	57	57	57	57	57	57	57	57	57	57	57	57	57	57	57	57	57	57	57	57	57	55
				Exposed	57	57	57	57	57	57	57	57	57	57	57	57	57	57	57	57	57	57	57	57	57	57	57	57	57	57	57	57	57	57	57	57	53	57	53	49	57	50	46	57	47	43
		8:12	33.7	Non-Exposed	60	60	60	60	60	60	60	60	60	60	60	60	60	60	60	60	60	60	60	60	60	60	60	60	60	60	60	60	60	60	60	60	60	60	60	60	60	60	59	60	59	55
				Exposed	60	60	60	60	60	60	60	60	60	60	60	60	60	60	60	60	60	60	60	60	60	60	60	60	60	60	60	60	60	57	60	57	53	60	53	49	60	50	46	60	47	43
		9:12	36.9	Non-Exposed	62	62	62	62	62	62	62	62	62	62	62	62	62	62	62	62	62	62	62	62	62	62	62	62	62	62	62	62	62	62	62	62	62	62	62	62	62	62	59	62	59	55
				Exposed	62	62	62	62	62	62	62	62	62	62	62	62	62	62	62	62	62	62	62	62	62	62	62	62	62	62	62	62	61	57	62	57	53	62	53	49	62	49	46	62	47	43
		10:12	39.8	Non-Exposed	65	65	65	65	65	65	65	65	65	65	65	65	65	65	65	65	65	65	65	65	65	65	65	65	65	65	65	65	65	65	65	65	63	65	62	59	64	59	55	65	55	51
				Exposed	65	65	65	65	65	65	65	65	65	65	65	65	65	65	65	65	65	65	65	65	62	65	61	57	65	57	53	65	53	49	65	49	46	63	46	43	67	47	43	67	48	45
		11:12	42.5	Non-Exposed	69	69	69	69	69	69	69	69	69	69	69	69	69	69	69	69	69	69	69	69	69	69	69	69	69	69	69	69	69	69	69	69	68	68	67	63	67	62	59	66	59	55
				Exposed	69	69	69	69	69	69	69	69	69	69	69	69	69	69	69	69	69	69	69	69	69	69	69	69	69	66	62	69	61	57	69	56	53	68	53	49	67	49	46	63	46	43
		12:12	45	Non-Exposed	73	73	73	73	73	73	73	73	73	73	73	73	73	73	73	73	73	73	73	73	73	73	73	73	73	73	73	73	73	73	72	72	68	71	67	63	70	62	59	69	58	55
				Exposed	73	73	73	73	73	73	73	73	73	73	73	73	73	73	73	73	73	73	73	73	72	73	72	69	73	66	62	73	61	57	72	56	53	71	53	49	67	49	46	63	46	43
	C	2:12	9.5	Non-Exposed	55	55	55	55	55	55	55	55	55	55	55	55	55	55	55	55	55	55	55	55	55	55	55	55	55	55	55	55	55	55	55	55	55	55	55	55	55	55	53	54	52	50
				Exposed	55	55	55	55	55	55	55	55	55	55	55	55	55	55	55	55	55	55	55	55	55	55	55	55	55	55	55	55	54	52	55	51	48	55	47	0	52	0	0	49	0	0
		3:12	14.0	Non-Exposed	52	52	52	52	52	52	52	52	52	52	52	52	52	52	52	52	52	52	52	52	52	52	52	52	52	52	52	52	52	52	52	52	52	52	52	52	52	52	52	52	52	50
				Exposed	52	52	52	52	52	52	52	52	52	52	52	52	52	52	52	52	52	52	52	52	52	52	52	52	52	52	52	52	52	52	52	50	48	52	47	0	52	0	0	49	0	0
		4:12	18.4	Non-Exposed	52	52	52	52	52	52	52	52	52	52	52	52	52	52	52	52	52	52	52	52	52	52	52	52	52	52	52	52	52	52	52	52	52	52	52	52	52	52	52	52	52	50
				Exposed	52	52	52	52	52	52	52	52	52	52	52	52	52	52	52	52	52	52	52	52	52	52	52	52	52	52	52	52	52	52	52	50	48	52	47	0	52	0	0	49	0	0
		5:12	22.6	Non-Exposed	54	54		54	54		54	54		54	54		54	54		54	54		54	54		54	54		54	54		54	54		54	54		54	54		54	54		53	53	
				Exposed	54	54		54	54		54	54		54	54		54	54		54	54		54	54		54	54		54	54		54	54		54	52		54	49		53	46				
		6:12	26.6	Non-Exposed	55	55		55	55		55	55		55	55		55	55		55	55		55	55		55	55		55	55		55	55		55	55		55	55		55	55		54	54	
				Exposed	55	55		55	55		55	55		55	55		55	55		55	55		55	55		55	55		55	55		55	55		55	52		55	49		54	46				
50		7:12	30.3	Non-Exposed	57	57	57	57	57	57	57	57	57	57	57	57	57	57	57	57	57	57	57	57	57	57	57	57	57	57	57	57	57	57	57	57	55	57	55	51	56	52	48	55	48	45
				Exposed	57	57	57	57	57	57	57	57	57	57	57	57	57	57	57	57	57	57	57	57	57	57	57	57	57	55	51	57	50	47	57	47	43	57	44	0	56	0	0	53	0	0
		8:12	33.7	Non-Exposed	60	60	60	60	60	60	60	60	60	60	60	60	60	60	60	60	60	60	60	60	60	60	60	60	60	60	60	60	60	60	60	59	55	59	55	51	58	52	48	57	48	45
				Exposed	60	60	60	60	60	60	60	60	60	60	60	60	60	60	60	60	60	60	60	60	58	60	59	56	60	54	51	60	50	47	60	47	43	59	44	0	56	0	0	53	0	0
		9:12	36.9	Non-Exposed	62	62	62	62	62	62	62	62	62	62	62	62	62	62	62	62	62	62	62	62	62	62	62	62	62	62	62	62	62	60	62	59	55	61	55	51	60	51	48	59	48	45
				Exposed	62	62	62	62	62	62	62	62	62	62	62	62	62	62	62	62	62	61	62	62	58	62	59	56	62	54	51	62	50	47	62	47	43	60	44	0	56	0	0	53	0	0
		10:12	39.8	Non-Exposed	65	65	65	65	65	65	65	65	65	65	65	65	65	65	65	65	65	65	65	65	65	65	65	65	65	65	65	65	63	60	64	59	55	63	55	51	62	51	48	61	48	45
				Exposed	65	65	65	65	65	65	65	65	65	65	65	65	65	65	65	65	65	61	65	62	58	65	59	55	65	54	51	65	50	47	63	47	43	60	44	0	56	0	0	53	0	0
		11:12	42.5	Non-Exposed	69	69	69	69	69	69	69	69	69	69	69	69	69	69	69	69	69	69	69	69	69	69	69	69	69	69	65	68	63	60	66	59	55	65	55	51	64	51	48	63	48	45
				Exposed	69	69	69	69	69	69	69	69	69	69	69	69	69	68	65	69	65	61	69	62	58	69	59	55	69	54	51	68	50	46	63	47	43	59	44	0	56	0	0	53	0	0
		12:12	45	Non-Exposed	73	73	73	73	73	73	73	73	73	73	73	73	73	73	73	73	73	73	73	73	73	73	73	72	72	69	65	70	63	59	69	59	55	68	55	51	66	51	48	65	48	45
				Exposed	73	73	73	73	73	73	73	73	73	73	72	68	73	68	64	73	65	61	73	62	58	73	59	55	72	54	51	68	50	46	63	47	43	59	43	0	56	0	0	53	0	0
	D	2:12	9.5	Non-Exposed	55	55	55	55	55	55	55	55	55	55	55	55	55	55	55	55	55	55	55	55	55	55	55	55	55	55	55	55	55	55	55	55	55	54	54	51	53	51	49	53	48	0
				Exposed	55	55	55	55	55	55	55	55	55	55	55	55	55	55	55	55	55	55	55	55	55	55	55	55	55	53	51	55	50	48	54	46	0	50	0	0	48	0	0	0	0	0
		3:12	14.0	Non-Exposed	52	52	52	52	52	52	52	52	52	52	52	52	52	52	52	52	52	52	52	52	52	52	52	52	52	52	52	52	52	52	52	52	52	52	52	51	52	50	48	51	48	0
				Exposed	52	52	52	52	52	52	52	52	52	52	52	52	52	52	52	52	52	52	52	52	52	52	52	52	52	52	51	52	49	47	52	46	0	50	0	0	0	0	0	0	0	0
		4:12	18.4	Non-Exposed	52	52	52	52	52	52	52	52	52	52	52	52	52	52	52	52	52	52	52	52	52	52	52	52	52	52	52	52	52	52	52	52	52	52	52	51	52	50	48	51	48	0
				Exposed	52	52	52	52	52	52	52	52	52	52	52	52	52	52	52	52	52	52	52	52	52	52	52	52	52	52	51	52	49	47	52	46	0	50	0	0	0	0	0	0	0	0
		5:12	22.6	Non-Exposed	54	54		54	54		54	54		54	54		54	54		54	54		54	54		54	54		54	54		54	54		54	54		53	53		53	53		52	52	
				Exposed	54	54		54	54		54	54		54	54		54	54		54	54		54	54		54	54		54	54		54	54		54	51		53	48		53	0		51	0	
		6:12	26.6	Non-Exposed	55	55		55	55		55	55		55	55		55	55		55	55		55	55		55	55		55	55		55	55		55	55		55	55		54	54		53	52	
				Exposed	55	55		55	55		55	55		55	55		55	55		55	55		55	55		55	55		55	55		55	54		55	51		55	48		54	0		51	0	
		7:12	30.3	Non-Exposed	57	57	57	57	57	57	57	57	57	57	57	57	57	57	57	57	57	57	57	57	57	57	57	57	57	57	57	57	57	54	57	54	50	56	50	46	55	47	43	54	44	40
				Exposed	57	57	57	57	57	57	57	57	57	57	57	57	57	57	57	57	57	55	57	56	53	57	54	50	57	50	46	57	46	42	57	0	0	55	0	0	52	0	0	49	0	0
		8:12	33.7	Non-Exposed	60	60	60	60	60	60	60	60	60	60	60	60	60	60	60	60	60	60	60	60	60	60	60	60	60	60	59	59	58	54	58	54	50	57	50	46	56	47	43	55	44	40
				Exposed	60	60	60	60	60	60	60	60	60	60	60	60	60	60	58	60	59	55	60	56	53	60	54	50	60	49	46	59	46	42	58	0	0	55	0	0	52	0	0	49	0	0
		9:12	36.9	Non-Exposed	62	62	62	62	62	62	62	62	62	62	62	62	62	62	62	62	62	62	62	62	62	62	62	62	62	62	59	61	58	54	60	53	50	59	50	46	58	47	43	57	44	0
				Exposed	62	62	62	62	62	62	62	62	62	62	62	62	62	62	58	62	59	55	62	56	53	62	54	50	62	49	46	61	46	42	58	0	0	55	0	0	52	0	0	49	0	0
		10:12	39.8	Non-Exposed	65	65	65	65	65	65	65	65	65	65	65	65	65	65	65	65	65	65	65	65	65	65	65	64	65	62	59	64	58	54	62	53	50	61	50	46	60	47	43	59	44	0
				Exposed	65	65	65	65	65	65	65	65	65	65	65	61	65	62	58	65	59	55	65	56	52	65	54	50	65	49	46	62	46	42	58	0	0	55	0	0	52	0	0	49	0	0
		11:12	42.5	Non-Exposed	69	69	69	69	69	69	69	69	69	69	69	69	69	69	69	69	69	69	69	69	68	69	68	64	67	62	58	66	57	54	65	53	50	63	50	46	62	47	43	60	44	0
				Exposed	69	69	69	69	69	69	69	69	65	69	65	61	69	62	58	69	59	55	69	56	52	69	54	50	67	49	46	62	46	42	58	0	0	55	0	0	52	0	0	49	0	0
		12:12	45	Non-Exposed	73	73	73	73	73	73	73	73	73	73	73	73	73	73	73	73	73	72	72	71	68	71	68	64	70	62	58	69	57	54	67	53	50	65	50	46	63	47	43	60	44	0
				Exposed	73	73	73	73	73	70	73	69	65	73	65	61	73	62	58	73	59	55	72	56	52	71	54	50	67	49	46	62	46	42	58	0	0	55	0	0	52	0	0	49	0	0

Tamarack 2.3 Rail – Hip Flush-Mount on 30 Foot Maximum Mean Roof Height – Landscape – Panel Width = 45 Inches or Less

Ground Snow Load	Exposure Category	Roof Pitch	Roof Angle	Wind Speed (mph)	95			100			105			110			115			120			125			130			140			150			160			170			180			190		
				Roof Area	1	2	3	1	2	3	1	2	3	1	2	3	1	2	3	1	2	3	1	2	3	1	2	3	1	2	3	1	2	3	1	2	3	1	2	3	1	2	3	1	2	3
55	B	2:12	9.5	Non-Exposed	52	52	52	52	52	52	52	52	52	52	52	52	52	52	52	52	52	52	52	52	52	52	52	52	52	52	52	52	52	52	52	52	52	52	52	52	52	52	52	52	52	52
				Exposed	52	52	52	52	52	52	52	52	52	52	52	52	52	52	52	52	52	52	52	52	52	52	52	52	52	52	52	52	52	52	52	52	52	52	52	52	52	52	51	52	50	48
		3:12	14.0	Non-Exposed	50	50	50	50	50	50	50	50	50	50	50	50	50	50	50	50	50	50	50	50	50	50	50	50	50	50	50	50	50	50	50	50	50	50	50	50	50	50	50	50	50	50
				Exposed	50	50	50	50	50	50	50	50	50	50	50	50	50	50	50	50	50	50	50	50	50	50	50	50	50	50	50	50	50	50	50	50	50	50	50	50	50	50	50	50	50	48
		4:12	18.4	Non-Exposed	50	50	50	50	50	50	50	50	50	50	50	50	50	50	50	50	50	50	50	50	50	50	50	50	50	50	50	50	50	50	50	50	50	50	50	50	50	50	50	50	50	50
				Exposed	50	50	50	50	50	50	50	50	50	50	50	50	50	50	50	50	50	50	50	50	50	50	50	50	50	50	50	50	50	50	50	50	50	50	50	50	50	50	50	50	50	48
		5:12	22.6	Non-Exposed	51	51		51	51		51	51		51	51		51	51		51	51		51	51		51	51		51	51		51	51		51	51		51	51		51	51		51	51	
				Exposed	51	51		51	51		51	51		51	51		51	51		51	51		51	51		51	51		51	51		51	51		51	51		51	51		51	51		51	51	
		6:12	26.6	Non-Exposed	53	53		53	53		53	53		53	53		53	53		53	53		53	53		53	53		53	53		53	53		53	53		53	53		53	53		53	53	
				Exposed	53	53		53	53		53	53		53	53		53	53		53	53		53	53		53	53		53	53		53	53		53	53		53	53		53	53		53	53	
		7:12	30.3	Non-Exposed	55	55	55	55	55	55	55	55	55	55	55	55	55	55	55	55	55	55	55	55	55	55	55	55	55	55	55	55	55	55	55	55	55	55	55	55	55	55	55	55	55	55
				Exposed	55	55	55	55	55	55	55	55	55	55	55	55	55	55	55	55	55	55	55	55	55	55	55	55	55	55	55	55	55	55	55	55	53	55	53	49	55	50	46	55	47	43
		8:12	33.7	Non-Exposed	57	57	57	57	57	57	57	57	57	57	57	57	57	57	57	57	57	57	57	57	57	57	57	57	57	57	57	57	57	57	57	57	57	57	57	57	57	57	57	57	57	55
				Exposed	57	57	57	57	57	57	57	57	57	57	57	57	57	57	57	57	57	57	57	57	57	57	57	57	57	57	57	57	57	57	57	57	53	57	53	49	57	50	46	57	47	43
		9:12	36.9	Non-Exposed	60	60	60	60	60	60	60	60	60	60	60	60	60	60	60	60	60	60	60	60	60	60	60	60	60	60	60	60	60	60	60	60	60	60	60	60	60	60	59	60	59	55
				Exposed	60	60	60	60	60	60	60	60	60	60	60	60	60	60	60	60	60	60	60	60	60	60	60	60	60	60	60	60	60	57	60	57	53	60	53	49	60	49	46	60	47	43
		10:12	39.8	Non-Exposed	63	63	63	63	63	63	63	63	63	63	63	63	63	63	63	63	63	63	63	63	63	63	63	63	63	63	63	63	63	63	63	63	63	63	63	63	63	62	59	62	59	55
				Exposed	63	63	63	63	63	63	63	63	63	63	63	63	63	63	63	63	63	63	63	63	62	63	61	57	63	57	53	63	53	49	63	49	46	62	46	43						
		11:12	42.5	Non-Exposed	66	66	66	66	66	66	66	66	66	66	66	66	66	66	66	66	66	66	66	66	66	66	66	66	66	66	66	66	66	66	66	66	63	65	62	59	64	59	55			
				Exposed	66	66	66	66	66	66	66	66	66	66	66	66	66	66	66	66	66	66	66	66	62	66	61	57	66	56	53	66	53	49	65	49	46	63	46	43						
		12:12	45	Non-Exposed	70	70	70	70	70	70	70	70	70	70	70	70	70	70	70	70	70	70	70	70	70	70	70	70	70	70	70	70	70	70	70	70	68	69	67	63	68	62	59	67	58	55
				Exposed	70	70	70	70	70	70	70	70	70	70	70	70	70	70	70	70	70	70	70	70	70	70	70	69	70	66	62	70	61	57	70	56	53	69	53	49	67	49	46	63	46	43
	C	2:12	9.5	Non-Exposed	52	52	52	52	52	52	52	52	52	52	52	52	52	52	52	52	52	52	52	52	52	52	52	52	52	52	52	52	52	52	52	52	52	52	52	52	52	52	52	52	52	50
				Exposed	52	52	52	52	52	52	52	52	52	52	52	52	52	52	52	52	52	52	52	52	52	52	52	52	52	52	52	52	52	52	52	51	48	52	47	0	52	0	0	49	0	0
		3:12	14.0	Non-Exposed	50	50	50	50	50	50	50	50	50	50	50	50	50	50	50	50	50	50	50	50	50	50	50	50	50	50	50	50	50	50	50	50	50	50	50	50	50	50	50	50	50	50
				Exposed	50	50	50	50	50	50	50	50	50	50	50	50	50	50	50	50	50	50	50	50	50	50	50	50	50	50	50	50	50	50	50	50	48	50	47	0	50	0	0	49	0	0
		4:12	18.4	Non-Exposed	50	50	50	50	50	50	50	50	50	50	50	50	50	50	50	50	50	50	50	50	50	50	50	50	50	50	50	50	50	50	50	50	50	50	50	50	50	50	50	50	50	50
				Exposed	50	50	50	50	50	50	50	50	50	50	50	50	50	50	50	50	50	50	50	50	50	50	50	50	50	50	50	50	50	50	50	50	48	50	47	0	50	0	0	49	0	0
		5:12	22.6	Non-Exposed	51	51		51	51		51	51		51	51		51	51		51	51		51	51		51	51		51	51		51	51		51	51		51	51		51	51		51	51	
				Exposed	51	51		51	51		51	51		51	51		51	51		51	51		51	51		51	51		51	51		51	51		51	51		51	51		51	49		51	46	
		6:12	26.6	Non-Exposed	53	53		53	53		53	53		53	53		53	53		53	53		53	53		53	53		53	53		53	53		53	53		53	53		53	53		52	52	
				Exposed	53	53		53	53		53	53		53	53		53	53		53	53		53	53		53	53		53	53		53	52		53	49		52	46							
55		7:12	30.3	Non-Exposed	55	55	55	55	55	55	55	55	55	55	55	55	55	55	55	55	55	55	55	55	55	55	55	55	55	55	55	55	55	55	55	55	51	54	52	48	54	48	45			
				Exposed	55	55	55	55	55	55	55	55	55	55	55	55	55	55	55	55	55	55	55	55	51	55	50	47	55	47	43	55	44	0	54	0	0	53	0	0						
		8:12	33.7	Non-Exposed	57	57	57	57	57	57	57	57	57	57	57	57	57	57	57	57	57	57	57	57	57	57	57	57	57	57	57	57	57	57	57	57	55	57	55	51	56	52	48	55	48	45
				Exposed	57	57	57	57	57	57	57	57	57	57	57	57	57	57	57	57	57	57	57	57	54	51	57	50	47	57	47	43	57	44	0	56	0	0	53	0	0						
		9:12	36.9	Non-Exposed	60	60	60	60	60	60	60	60	60	60	60	60	60	60	60	60	60	60	60	60	60	60	60	60	60	60	60	60	60	60	60	59	55	59	55	51	58	51	48	57	48	45
				Exposed	60	60	60	60	60	60	60	60	60	60	60	60	60	60	60	60	60	60	60	60	58	60	59	56	60	54	51	60	50	47	60	47	43	59	44	0	56	0	0	53	0	0
		10:12	39.8	Non-Exposed	63	63	63	63	63	63	63	63	63	63	63	63	63	63	63	63	63	63	63	63	63	63	63	63	63	63	63	63	63	60	62	59	55	61	55	51	60	51	48	59	48	45
				Exposed	63	63	63	63	63	63	63	63	63	63	63	63	63	63	63	63	63	61	63	62	58	63	59	55	63	54	51	63	50	47	62	47	43	60	44	0	56	0	0	53	0	0
		11:12	42.5	Non-Exposed	66	66	66	66	66	66	66	66	66	66	66	66	66	66	66	66	66	66	66	66	66	66	66	66	66	66	65	66	63	60	64	59	55	63	55	51	62	51	48	61	48	45
				Exposed	66	66	66	66	66	66	66	66	66	66	66	66	66	66	65	66	65	61	66	62	58	66	59	55	66	54	51	66	50	46	63	47	43	59	44	0	56	0	0	53	0	0
		12:12	45	Non-Exposed	70	70	70	70	70	70	70	70	70	70	70	70	70	70	70	70	70	70	70	70	70	70	70	70	69	69	65	68	63	59	67	59	55	66	55	51	64	51	48	63	48	45
				Exposed	70	70	70	70	70	70	70	70	70	70	70	68	70	68	64	70	65	61	70	62	58	70	59	55	69	54	51	68	50	46	63	47	43	59	43	0	56	0	0	53	0	0
	D	2:12	9.5	Non-Exposed	52	52	52	52	52	52	52	52	52	52	52	52	52	52	52	52	52	52	52	52	52	52	52	52	52	52	52	52	52	52	52	52	52	52	52	51	52	51	49	51	48	0
				Exposed	52	52	52	52	52	52	52	52	52	52	52	52	52	52	52	52	52	52	52	52	52	52	52	52	52	52	51	52	50	48	52	46	0	50	0	0	48	0	0	0	0	0
		3:12	14.0	Non-Exposed	50	50	50	50	50	50	50	50	50	50	50	50	50	50	50	50	50	50	50	50	50	50	50	50	50	50	50	50	50	50	50	50	50	50	50	50	50	50	48	49	48	0
				Exposed	50	50	50	50	50	50	50	50	50	50	50	50	50	50	50	50	50	50	50	50	50	50	50	50	50	50	50	50	49	47	50	46	0	50	0	0	0	0	0	0	0	0
		4:12	18.4	Non-Exposed	50	50	50	50	50	50	50	50	50	50	50	50	50	50	50	50	50	50	50	50	50	50	50	50	50	50	50	50	50	50	50	50	50	50	50	50	50	50	48	50	48	0
				Exposed	50	50	50	50	50	50	50	50	50	50	50	50	50	50	50	50	50	50	50	50	50	50	50	50	50	50	50	50	49	47	50	46	0	50	0	0	0	0	0	0	0	0
		5:12	22.6	Non-Exposed	51	51		51	51		51	51		51	51		51	51		51	51		51	51		51	51		51	51		51	51		51	51		51	51		51	51		50	50	
				Exposed	51	51		51	51		51	51		51	51		51	51		51	51		51	51		51	51		51	51		51	51		51	51		51	48		51	0		50	0	
		6:12	26.6	Non-Exposed	53	53		53	53		53	53		53	53		53	53		53	53		53	53		53	53		53	53		53	53		53	53		53	53		52	52		51	51	
				Exposed	53	53		53	53		53	53		53	53		53	53		53	53		53	53		53	53		53	53		53	53		53	51		53	48		52	0		51	0	
		7:12	30.3	Non-Exposed	55	55	55	55	55	55	55	55	55	55	55	55	55	55	55	55	55	55	55	55	55	55	55	55	55	55	55	55	55	54	55	54	50	54	50	46	53	47	43	52	44	40
				Exposed	55	55	55	55	55	55	55	55	55	55	55	55	55	55	55	55	55	55	55	55	53	55	54	50	55	50	46	55	46	42	55	0	0	54	0	0	52	0	0	49	0	0
		8:12	33.7	Non-Exposed	57	57	57	57	57	57	57	57	57	57	57	57	57	57	57	57	57	57	57	57	57	57	57	57	57	57	57	57	57	54	57	54	50	56	50	46	55	47	43	54	44	40
				Exposed	57	57	57	57	57	57	57	57	57	57	57	57	57	57	57	57	57	55	57	56	53	57	54	50	57	49	46	57	46	42	57	0	0	55	0	0	52	0	0	49	0	0
		9:12	36.9	Non-Exposed	60	60	60	60	60	60	60	60	60	60	60	60	60	60	60	60	60	60	60	60	60	60	60	60	60	60	59	60	58	54	59	53	50	57	50	46	56	47	43	55	44	0
				Exposed	60	60	60	60	60	60	60	60	60	60	60	60	60	60	58	60	59	55	60	56	53	60	54	50	60	49	46	60	46	42	58	0	0	55	0	0	52	0	0	49	0	0
		10:12	39.8	Non-Exposed	63	63	63	63	63	63	63	63	63	63	63	63	63	63	63	63	63	63	63	63	63	63	63	63	63	62	59	62	58	54	61	53	50	59	50	46	58	47	43	57	44	0
				Exposed	63	63	63	63	63	63	63	63	63	63	63	61	63	62	58	63	59	55	63	56	52	63	54	50	63	49	46	62	46	42	58	0	0	55	0	0	52	0	0	49	0	0
		11:12	42.5	Non-Exposed	66	66	66	66	66	66	66	66	66	66	66	66	66	66	66	66	66	66	66	66	66	66	66	64	65	62	58	64	57	54	63	53	50	62	50	46	60	47	43	59	44	0
				Exposed	66	66	66	66	66	66	66	66	65	66	65	61	66	62	58	66	59	55	66	56	52	66	54	50	65	49	46	62	46	42	58	0	0	55	0	0	52	0	0	49	0	0
		12:12	45	Non-Exposed	70	70	70	70	70	70	70	70	70	70	70	70	70	70	70	70	70	70	70	70	68	69	68	64	68	62	58	67	57	54	65	53	50	64	50	46	62	47	43	60	44	0
				Exposed	70	70	70	70	70	70	70	69	65	70	65	61	70	62	58	70	59	55	70	56	52	69	54	50	67	49	46	62	46	42	58	0	0	55	0	0	52	0	0	49	0	0

Tamarack 2.3 Rail – Hip Flush-Mount on 30 Foot Maximum Mean Roof Height – Landscape – Panel Width = 45 Inches or Less

Ground Snow Load	Exposure Category	Roof Pitch	Roof Angle	Wind Speed (mph)	95			100			105			110			115			120			125			130			140			150			160			170			180			190		
				Roof Area	1	2	3	1	2	3	1	2	3	1	2	3	1	2	3	1	2	3	1	2	3	1	2	3	1	2	3	1	2	3	1	2	3	1	2	3	1	2	3	1	2	3
60	B	2:12	9.5	Non-Exposed	50	50	50	50	50	50	50	50	50	50	50	50	50	50	50	50	50	50	50	50	50	50	50	50	50	50	50	50	50	50	50	50	50	50	50	50	50	50	50	50	50	50
				Exposed	50	50	50	50	50	50	50	50	50	50	50	50	50	50	50	50	50	50	50	50	50	50	50	50	50	50	50	50	50	50	50	50	50	50	50	50	50	50	50	50	50	48
		3:12	14.0	Non-Exposed	48	48	48	48	48	48	48	48	48	48	48	48	48	48	48	48	48	48	48	48	48	48	48	48	48	48	48	48	48	48	48	48	48	48	48	48	48	48	48	48	48	48
				Exposed	48	48	48	48	48	48	48	48	48	48	48	48	48	48	48	48	48	48	48	48	48	48	48	48	48	48	48	48	48	48	48	48	48	48	48	48	48	48	48	48	48	48
		4:12	18.4	Non-Exposed	48	48	48	48	48	48	48	48	48	48	48	48	48	48	48	48	48	48	48	48	48	48	48	48	48	48	48	48	48	48	48	48	48	48	48	48	48	48	48	48	48	48
				Exposed	48	48	48	48	48	48	48	48	48	48	48	48	48	48	48	48	48	48	48	48	48	48	48	48	48	48	48	48	48	48	48	48	48	48	48	48	48	48	48	48	48	48
		5:12	22.6	Non-Exposed	49	49		49	49		49	49		49	49		49	49		49	49		49	49		49	49		49	49		49	49		49	49		49	49		49	49		49	49	
				Exposed	49	49		49	49		49	49		49	49		49	49		49	49		49	49		49	49		49	49		49	49		49	49		49	49		49	49		49	49	
		6:12	26.6	Non-Exposed	51	51		51	51		51	51		51	51		51	51		51	51		51	51		51	51		51	51		51	51		51	51		51	51		51	51		51	51	
				Exposed	51	51		51	51		51	51		51	51		51	51		51	51		51	51		51	51		51	51		51	51		51	51		51	51		51	51		51	51	
		7:12	30.3	Non-Exposed	52	52	52	52	52	52	52	52	52	52	52	52	52	52	52	52	52	52	52	52	52	52	52	52	52	52	52	52	52	52	52	52	52	52	52	52	52	52	52	52	52	52
				Exposed	52	52	52	52	52	52	52	52	52	52	52	52	52	52	52	52	52	52	52	52	52	52	52	52	52	52	52	52	52	52	52	52	49	52	50	46	52	47	43	52	47	43
		8:12	33.7	Non-Exposed	55	55	55	55	55	55	55	55	55	55	55	55	55	55	55	55	55	55	55	55	55	55	55	55	55	55	55	55	55	55	55	55	55	55	55	55	55	55	55	55	55	55
				Exposed	55	55	55	55	55	55	55	55	55	55	55	55	55	55	55	55	55	55	55	55	55	55	55	55	55	55	55	55	55	53	55	53	49	55	50	46	55	47	43	55	47	43
		9:12	36.9	Non-Exposed	57	57	57	57	57	57	57	57	57	57	57	57	57	57	57	57	57	57	57	57	57	57	57	57	57	57	57	57	57	57	57	57	57	57	57	57	57	57	57	57	57	55
				Exposed	57	57	57	57	57	57	57	57	57	57	57	57	57	57	57	57	57	57	57	57	57	57	57	57	57	57	57	57	57	53	57	53	49	57	49	46	57	47	43	57	47	43
		10:12	39.8	Non-Exposed	60	60	60	60	60	60	60	60	60	60	60	60	60	60	60	60	60	60	60	60	60	60	60	60	60	60	60	60	60	60	60	60	60	60	53	49	60	49	46	60	46	43
				Exposed	60	60	60	60	60	60	60	60	60	60	60	60	60	60	60	60	60	60	60	60	60	60	60	60	60	60	60	60	60	57	60	57	53	60	53	49	63	49	46	63	46	43
		11:12	42.5	Non-Exposed	64	64	64	64	64	64	64	64	64	64	64	64	64	64	64	64	64	64	64	64	64	64	64	64	64	64	64	64	64	64	64	64	63	64	64	63	63	62	59	63	59	55
				Exposed	64	64	64	64	64	64	64	64	64	64	64	64	64	64	64	64	64	64	64	64	64	64	64	64	64	64	62	64	61	57	64	56	53	64	53	49	63	49	46	63	46	43
		12:12	45	Non-Exposed	67	67	67	67	67	67	67	67	67	67	67	67	67	67	67	67	67	67	67	67	67	67	67	67	67	67	67	67	67	67	67	67	67	67	67	63	66	62	59	65	58	55
				Exposed	67	67	67	67	67	67	67	67	67	67	67	67	67	67	67	67	67	67	67	67	67	67	67	67	67	66	62	67	61	57	67	56	53	67	53	49	66	49	46	63	46	43
	C	2:12	9.5	Non-Exposed	50	50	50	50	50	50	50	50	50	50	50	50	50	50	50	50	50	50	50	50	50	50	50	50	50	50	50	50	50	50	50	50	50	50	50	50	50	50	50	50	50	50
				Exposed	50	50	50	50	50	50	50	50	50	50	50	50	50	50	50	50	50	50	50	50	50	50	50	50	50	50	50	50	50	50	50	50	48	50	47	0	50	0	0	49	0	0
		3:12	14.0	Non-Exposed	48	48	48	48	48	48	48	48	48	48	48	48	48	48	48	48	48	48	48	48	48	48	48	48	48	48	48	48	48	48	48	48	48	48	48	48	48	48	48	48	48	48
				Exposed	48	48	48	48	48	48	48	48	48	48	48	48	48	48	48	48	48	48	48	48	48	48	48	48	48	48	48	48	48	48	48	48	47	48	47	0	48	0	0	48	0	0
		4:12	18.4	Non-Exposed	48	48	48	48	48	48	48	48	48	48	48	48	48	48	48	48	48	48	48	48	48	48	48	48	48	48	48	48	48	48	48	48	48	48	48	48	48	48	48	48	48	48
				Exposed	48	48	48	48	48	48	48	48	48	48	48	48	48	48	48	48	48	48	48	48	48	48	48	48	48	48	48	48	48	48	48	48	47	48	47	0	48	0	0	48	0	0
		5:12	22.6	Non-Exposed	49	49		49	49		49	49		49	49		49	49		49	49		49	49		49	49		49	49		49	49		49	49		49	49		49	49		49	49	
				Exposed	49	49		49	49		49	49		49	49		49	49		49	49		49	49		49	49		49	49		49	49		49	49		49	49		49	49		49	46	
		6:12	26.6	Non-Exposed	51	51		51	51		51	51		51	51		51	51		51	51		51	51		51	51		51	51		51	51		51	51		51	51		51	51		51	51	
				Exposed	51	51		51	51		51	51		51	51		51	51		51	51		51	51		51	51		51	51		51	51		51	51		51	51		51	49		51	46	
60		7:12	30.3	Non-Exposed	52	52	52	52	52	52	52	52	52	52	52	52	52	52	52	52	52	52	52	52	52	52	52	52	52	52	52	52	52	52	52	52	51	52	52	48	52	48	45			
				Exposed	52	52	52	52	52	52	52	52	52	52	52	52	52	52	52	52	52	52	52	52	52	52	52	52	52	52	51	52	50	47	52	47	43	52	44	0	52	0	0	52	0	0
		8:12	33.7	Non-Exposed	55	55	55	55	55	55	55	55	55	55	55	55	55	55	55	55	55	55	55	55	55	55	55	55	55	55	55	55	55	55	55	55	51	54	52	48	54	48	45			
				Exposed	55	55	55	55	55	55	55	55	55	55	55	55	55	55	55	55	55	55	55	55	55	55	55	55	54	51	55	50	47	55	47	43	55	44	0	54	0	0	53	0	0
		9:12	36.9	Non-Exposed	57	57	57	57	57	57	57	57	57	57	57	57	57	57	57	57	57	57	57	57	57	57	57	57	57	57	57	57	57	57	57	55	57	55	51	56	51	48	55	48	45	
				Exposed	57	57	57	57	57	57	57	57	57	57	57	57	57	57	57	57	57	57	57	57	57	57	57	56	57	54	51	57	50	47	57	47	43	57	44	0	56	0	0	53	0	0
		10:12	39.8	Non-Exposed	60	60	60	60	60	60	60	60	60	60	60	60	60	60	60	60	60	60	60	60	60	60	60	60	60	60	60	60	60	60	60	59	55	59	55	51	58	51	48	57	48	45
				Exposed	60	60	60	60	60	60	60	60	60	60	60	60	60	60	60	60	60	60	60	60	58	60	59	55	60	54	51	60	50	47	60	47	43	59	44	0	56	0	0	53	0	0
		11:12	42.5	Non-Exposed	64	64	64	64	64	64	64	64	64	64	64	64	64	64	64	64	64	64	64	64	64	64	64	64	64	64	64	64	63	60	63	59	55	62	55	51	61	51	48	59	48	45
				Exposed	64	64	64	64	64	64	64	64	64	64	64	64	64	64	64	64	64	61	64	62	58	64	59	55	64	54	51	64	50	46	63	47	43	59	44	0	56	0	0	53	0	0
		12:12	45	Non-Exposed	67	67	67	67	67	67	67	67	67	67	67	67	67	67	67	67	67	67	67	67	67	67	67	67	67	67	65	66	63	59	65	59	55	64	55	51	63	51	48	62	48	45
				Exposed	67	67	67	67	67	67	67	67	67	67	67	67	67	67	64	67	65	61	67	62	58	67	59	55	67	54	51	66	50	46	63	47	43	59	43	0	56	0	0	53	0	0
	D	2:12	9.5	Non-Exposed	50	50	50	50	50	50	50	50	50	50	50	50	50	50	50	50	50	50	50	50	50	50	50	50	50	50	50	50	50	50	50	50	50	50	50	50	49	49	48	0		
				Exposed	50	50	50	50	50	50	50	50	50	50	50	50	50	50	50	50	50	50	50	50	50	50	50	50	50	50	50	50	50	48	50	46	0	50	0	0	48	0	0	0	0	0
		3:12	14.0	Non-Exposed	48	48	48	48	48	48	48	48	48	48	48	48	48	48	48	48	48	48	48	48	48	48	48	48	48	48	48	48	48	48	48	48	48	48	48	48	48	48	48	48	48	0
				Exposed	48	48	48	48	48	48	48	48	48	48	48	48	48	48	48	48	48	48	48	48	48	48	48	48	48	48	48	48	48	47	48	46	0	48	0	0	0	0	0	0	0	0
		4:12	18.4	Non-Exposed	48	48	48	48	48	48	48	48	48	48	48	48	48	48	48	48	48	48	48	48	48	48	48	48	48	48	48	48	48	48	48	48	48	48	48	48	48	48	48	48	48	0
				Exposed	48	48	48	48	48	48	48	48	48	48	48	48	48	48	48	48	48	48	48	48	48	48	48	48	48	48	48	48	48	47	48	46	0	48	0	0	0	0	0	0	0	0
		5:12	22.6	Non-Exposed	49	49		49	49		49	49		49	49		49	49		49	49		49	49		49	49		49	49		49	49		49	49		49	49		49	49		49	49	
				Exposed	49	49		49	49		49	49		49	49		49	49		49	49		49	49		49	49		49	49		49	49		49	49		49	48		49	0		49	0	
		6:12	26.6	Non-Exposed	51	51		51	51		51	51		51	51		51	51		51	51		51	51		51	51		51	51		51	51		51	51		51	51		51	51		50	50	
				Exposed	51	51		51	51		51	51		51	51		51	51		51	51		51	51		51	51		51	51		51	51		51	51		51	48		51	0		50	0	
		7:12	30.3	Non-Exposed	52	52	52	52	52	52	52	52	52	52	52	52	52	52	52	52	52	52	52	52	52	52	52	52	52	52	52	52	52	52	52	52	50	52	50	46	52	47	43	51	44	40
				Exposed	52	52	52	52	52	52	52	52	52	52	52	52	52	52	52	52	52	52	52	52	52	52	52	50	52	50	46	52	46	42	52	0	0	52	0	0	52	0	0	49	0	0
		8:12	33.7	Non-Exposed	55	55	55	55	55	55	55	55	55	55	55	55	55	55	55	55	55	55	55	55	55	55	55	55	55	55	55	55	55	54	55	54	50	54	50	46	53	47	43	52	44	40
				Exposed	55	55	55	55	55	55	55	55	55	55	55	55	55	55	55	55	55	55	55	55	53	55	54	50	55	49	46	55	46	42	55	0	0	54	0	0	52	0	0	49	0	0
		9:12	36.9	Non-Exposed	57	57	57	57	57	57	57	57	57	57	57	57	57	57	57	57	57	57	57	57	57	57	57	57	57	57	57	57	57	54	57	53	50	56	50	46	55	47	43	54	44	0
				Exposed	57	57	57	57	57	57	57	57	57	57	57	57	57	57	57	57	57	55	57	56	53	57	54	50	57	49	46	57	46	42	57	0	0	55	0	0	52	0	0	49	0	0
		10:12	39.8	Non-Exposed	60	60	60	60	60	60	60	60	60	60	60	60	60	60	60	60	60	60	60	60	60	60	60	60	60	60	59	60	58	54	59	53	50	58	50	46	57	47	43	56	44	0
				Exposed	60	60	60	60	60	60	60	60	60	60	60	60	60	60	58	60	59	55	60	56	52	60	54	50	60	49	46	60	46	42	58	0	0	55	0	0	52	0	0	49	0	0
		11:12	42.5	Non-Exposed	64	64	64	64	64	64	64	64	64	64	64	64	64	64	64	64	64	64	64	64	64	64	64	64	63	62	58	62	57	54	61	53	50	60	50	46	59	47	43	58	44	0
				Exposed	64	64	64	64	64	64	64	64	64	64	64	61	64	62	58	64	59	55	64	56	52	64	54	50	63	49	46	62	46	42	58	0	0	55	0	0	52	0	0	49	0	0
		12:12	45	Non-Exposed	67	67	67	67	67	67	67	67	67	67	67	67	67	67	67	67	67	67	67	67	67	67	67	64	66	62	58	65	57	54	63	53	50	62	50	46	61	47	43	60	44	0
				Exposed	67	67	67	67	67	67	67	67	65	67	65	61	67	62	58	67	59	55	67	56	52	67	54	50	66	49	46	62	46	42	58	0	0	55	0	0	52	0	0	49	0	0

Tamarack 2.3 Rail – Hip Flush-Mount on 30 Foot Maximum Mean Roof Height – Landscape – Panel Width = 45 Inches or Less

Ground Snow Load	Exposure Category	Roof Pitch	Roof Angle	Wind Speed (mph)	95			100			105			110			115			120			125			130			140			150			160			170			180			190		
				Roof Area	1	2	3	1	2	3	1	2	3	1	2	3	1	2	3	1	2	3	1	2	3	1	2	3	1	2	3	1	2	3	1	2	3	1	2	3	1	2	3	1	2	3
70	B	2:12	9.5	Non-Exposed	46	46	46	46	46	46	46	46	46	46	46	46	46	46	46	46	46	46	46	46	46	46	46	46	46	46	46	46	46	46	46	46	46	46	46	46	46	46	46	46	46	46
				Exposed	46	46	46	46	46	46	46	46	46	46	46	46	46	46	46	46	46	46	46	46	46	46	46	46	46	46	46	46	46	46	46	46	46	46	46	46	46	46	46	46	46	46
		3:12	14.0	Non-Exposed	44	44	44	44	44	44	44	44	44	44	44	44	44	44	44	44	44	44	44	44	44	44	44	44	44	44	44	44	44	44	44	44	44	44	44	44	44	44	44	44	44	44
				Exposed	44	44	44	44	44	44	44	44	44	44	44	44	44	44	44	44	44	44	44	44	44	44	44	44	44	44	44	44	44	44	44	44	44	44	44	44	44	44	44	44	44	44
		4:12	18.4	Non-Exposed	45	45	45	45	45	45	45	45	45	45	45	45	45	45	45	45	45	45	45	45	45	45	45	45	45	45	45	45	45	45	45	45	45	45	45	45	45	45	45	45	45	45
				Exposed	45	45	45	45	45	45	45	45	45	45	45	45	45	45	45	45	45	45	45	45	45	45	45	45	45	45	45	45	45	45	45	45	45	45	45	45	45	45	45	45	45	45
		5:12	22.6	Non-Exposed	46	46		46	46		46	46		46	46		46	46		46	46		46	46		46	46		46	46		46	46		46	46		46	46		46	46		46	46	
				Exposed	46	46		46	46		46	46		46	46		46	46		46	46		46	46		46	46		46	46		46	46		46	46		46	46		46	46		46	46	
		6:12	26.6	Non-Exposed	47	47		47	47		47	47		47	47		47	47		47	47		47	47		47	47		47	47		47	47		47	47		47	47		47	47		47	47	
				Exposed	47	47		47	47		47	47		47	47		47	47		47	47		47	47		47	47		47	47		47	47		47	47		47	47		47	47		47	47	
		7:12	30.3	Non-Exposed	49	49	49	49	49	49	49	49	49	49	49	49	49	49	49	49	49	49	49	49	49	49	49	49	49	49	49	49	49	49	49	49	49	49	49	49	49	49	49	49	49	49
				Exposed	49	49	49	49	49	49	49	49	49	49	49	49	49	49	49	49	49	49	49	49	49	49	49	49	49	49	49	49	49	49	49	49	49	49	49	49	49	49	46	49	47	43
		8:12	33.7	Non-Exposed	51	51	51	51	51	51	51	51	51	51	51	51	51	51	51	51	51	51	51	51	51	51	51	51	51	51	51	51	51	51	51	51	51	51	51	51	51	51	51	51	51	51
				Exposed	51	51	51	51	51	51	51	51	51	51	51	51	51	51	51	51	51	51	51	51	51	51	51	51	51	51	51	51	51	51	51	51	49	51	50	46	51	47	43	51	47	43
		9:12	36.9	Non-Exposed	53	53	53	53	53	53	53	53	53	53	53	53	53	53	53	53	53	53	53	53	53	53	53	53	53	53	53	53	53	53	53	53	53	53	53	53	53	53	53	53	53	53
				Exposed	53	53	53	53	53	53	53	53	53	53	53	53	53	53	53	53	53	53	53	53	53	53	53	53	53	53	53	53	53	53	53	53	49	53	49	46	53	47	43	53	47	43
		10:12	39.8	Non-Exposed	56	56	56	56	56	56	56	56	56	56	56	56	56	56	56	56	56	56	56	56	56	56	56	56	56	56	56	56	56	56	56	56	56	56	56	56	56	56	55	56	56	55
				Exposed	56	56	56	56	56	56	56	56	56	56	56	56	56	56	56	56	56	56	56	56	56	56	56	56	56	56	56	56	56	56	56	53	49	56	49	46	56	46	43	56	46	43
		11:12	42.5	Non-Exposed	59	59	59	59	59	59	59	59	59	59	59	59	59	59	59	59	59	59	59	59	59	59	59	59	59	59	59	59	59	59	59	59	59	59	59	59	59	59	55	59	59	55
				Exposed	59	59	59	59	59	59	59	59	59	59	59	59	59	59	59	59	59	59	59	59	59	59	59	59	59	59	59	59	59	57	59	56	53	59	53	49	59	49	46	59	46	43
		12:12	45	Non-Exposed	63	63	63	63	63	63	63	63	63	63	63	63	63	63	63	63	63	63	63	63	63	63	63	63	63	63	63	63	63	63	63	63	63	63	63	63	62	59	62	58	55
				Exposed	63	63	63	63	63	63	63	63	63	63	63	63	63	63	63	63	63	63	63	63	63	63	63	63	63	63	62	63	61	57	63	56	53	63	53	49	63	49	46	62	46	43
	C	2:12	9.5	Non-Exposed	46	46	46	46	46	46	46	46	46	46	46	46	46	46	46	46	46	46	46	46	46	46	46	46	46	46	46	46	46	46	46	46	46	46	46	46	46	46	46	46	46	46
				Exposed	46	46	46	46	46	46	46	46	46	46	46	46	46	46	46	46	46	46	46	46	46	46	46	46	46	46	46	46	46	46	46	46	46	46	46	0	46	0	0	46	0	0
		3:12	14.0	Non-Exposed	44	44	44	44	44	44	44	44	44	44	44	44	44	44	44	44	44	44	44	44	44	44	44	44	44	44	44	44	44	44	44	44	44	44	44	44	44	44	44	44	44	44
				Exposed	44	44	44	44	44	44	44	44	44	44	44	44	44	44	44	44	44	44	44	44	44	44	44	44	44	44	44	44	44	44	44	44	44	44	44	0	44	0	0	44	0	0
		4:12	18.4	Non-Exposed	45	45	45	45	45	45	45	45	45	45	45	45	45	45	45	45	45	45	45	45	45	45	45	45	45	45	45	45	45	45	45	45	45	45	45	45	45	45	45	45	45	45
				Exposed	45	45	45	45	45	45	45	45	45	45	45	45	45	45	45	45	45	45	45	45	45	45	45	45	45	45	45	45	45	45	45	45	45	45	45	0	45	0	0	45	0	0
		5:12	22.6	Non-Exposed	46	46		46	46		46	46		46	46		46	46		46	46		46	46		46	46		46	46		46	46		46	46		46	46		46	46		46	46	
				Exposed	46	46		46	46		46	46		46	46		46	46		46	46		46	46		46	46		46	46		46	46		46	46		46	46		46	46		46	46	
		6:12	26.6	Non-Exposed	47	47		47	47		47	47		47	47		47	47		47	47		47	47		47	47		47	47		47	47		47	47		47	47		47	47		47	47	
				Exposed	47	47		47	47		47	47		47	47		47	47		47	47		47	47		47	47		47	47		47	47		47	47		47	47		47	47		47	46	
70		7:12	30.3	Non-Exposed	49	49	49	49	49	49	49	49	49	49	49	49	49	49	49	49	49	49	49	49	49	49	49	49	49	49	49	49	49	49	49	49	49	49	49	48	49	48	45
				Exposed	49	49	49	49	49	49	49	49	49	49	49	49	49	49	49	49	49	49	49	49	49	49	49	49	49	49	49	49	47	43	49	44	0	49	0	0	49	0	0
		8:12	33.7	Non-Exposed	51	51	51	51	51	51	51	51	51	51	51	51	51	51	51	51	51	51	51	51	51	51	51	51	51	51	51	51	51	51	51	51	51	51	51	48	51	48	45
				Exposed	51	51	51	51	51	51	51	51	51	51	51	51	51	51	51	51	51	51	51	51	51	51	51	51	51	51	51	50	47	43	51	44	0	51	0	0	51	0	0
		9:12	36.9	Non-Exposed	53	53	53	53	53	53	53	53	53	53	53	53	53	53	53	53	53	53	53	53	53	53	53	53	53	53	53	53	53	53	53	53	51	53	51	48	53	48	45
				Exposed	53	53	53	53	53	53	53	53	53	53	53	53	53	53	53	53	53	53	53	53	53	53	53	53	53	53	51	53	50	47	53	47	43	53	44	0	53	0	0	53	0	0
		10:12	39.8	Non-Exposed	56	56	56	56	56	56	56	56	56	56	56	56	56	56	56	56	56	56	56	56	56	56	56	56	56	56	56	56	56	55	56	55	51	55	51	48	55	48	45
				Exposed	56	56	56	56	56	56	56	56	56	56	56	56	56	56	56	56	56	56	56	56	56	56	56	55	56	54	51	56	50	47	56	47	43	56	44	0	55	0	0	53	0	0
		11:12	42.5	Non-Exposed	59	59	59	59	59	59	59	59	59	59	59	59	59	59	59	59	59	59	59	59	59	59	59	59	59	59	59	59	59	55	59	55	51	58	51	48	57	48	45
				Exposed	59	59	59	59	59	59	59	59	59	59	59	59	59	59	59	59	59	59	59	59	58	59	59	55	59	54	51	59	50	46	59	47	43	59	44	0	56	0	0	53	0	0
		12:12	45	Non-Exposed	63	63	63	63	63	63	63	63	63	63	63	63	63	63	63	63	63	63	63	63	63	63	63	63	63	63	63	63	63	59	62	59	55	61	55	51	60	51	48	59	48	45
				Exposed	63	63	63	63	63	63	63	63	63	63	63	63	63	63	63	63	63	61	63	62	58	63	59	55	63	54	51	63	50	46	62	47	43	59	43	0	56	0	0	53	0	0
	D	2:12	9.5	Non-Exposed	46	46	46	46	46	46	46	46	46	46	46	46	46	46	46	46	46	46	46	46	46	46	46	46	46	46	46	46	46	46	46	46	46	46	46	46	46	46	0	46	0	0
				Exposed	46	46	46	46	46	46	46	46	46	46	46	46	46	46	46	46	46	46	46	46	46	46	46	46	46	46	46	46	46	46	46	46	0	46	0	0	46	0	0	0	0	0
		3:12	14.0	Non-Exposed	44	44	44	44	44	44	44	44	44	44	44	44	44	44	44	44	44	44	44	44	44	44	44	44	44	44	44	44	44	44	44	44	44	44	44	44	44	44	0	44	0	0
				Exposed	44	44	44	44	44	44	44	44	44	44	44	44	44	44	44	44	44	44	44	44	44	44	44	44	44	44	44	44	44	44	44	44	0	44	0	0	0	0	0	0	0	0
		4:12	18.4	Non-Exposed	45	45	45	45	45	45	45	45	45	45	45	45	45	45	45	45	45	45	45	45	45	45	45	45	45	45	45	45	45	45	45	45	45	45	45	45	45	45	0	45	0	0
				Exposed	45	45	45	45	45	45	45	45	45	45	45	45	45	45	45	45	45	45	45	45	45	45	45	45	45	45	45	45	45	45	45	45	0	45	0	0	0	0	0	0	0	0
		5:12	22.6	Non-Exposed	46	46		46	46		46	46		46	46		46	46		46	46		46	46		46	46		46	46		46	46		46	46		46	46		46	46		46	46	
				Exposed	46	46		46	46		46	46		46	46		46	46		46	46		46	46		46	46		46	46		46	46		46	46		46	46		46	0		46	0	
		6:12	26.6	Non-Exposed	47	47		47	47		47	47		47	47		47	47		47	47		47	47		47	47		47	47		47	47		47	47		47	47		47	47		47	47	
				Exposed	47	47		47	47		47	47		47	47		47	47		47	47		47	47		47	47		47	47		47	47		47	47		47	47		47	0		47	0	
		7:12	30.3	Non-Exposed	49	49	49	49	49	49	49	49	49	49	49	49	49	49	49	49	49	49	49	49	49	49	49	49	49	49	49	49	49	49	49	49	46	49	47	43	48	44	40
				Exposed	49	49	49	49	49	49	49	49	49	49	49	49	49	49	49	49	49	49	49	49	49	49	49	49	49	49	46	49	46	42	49	0	0	49	0	0	48	0	0
		8:12	33.7	Non-Exposed	51	51	51	51	51	51	51	51	51	51	51	51	51	51	51	51	51	51	51	51	51	51	51	51	51	51	51	51	51	51	51	50	51	50	46	50	47	43	50	44	40
				Exposed	51	51	51	51	51	51	51	51	51	51	51	51	51	51	51	51	51	51	51	51	51	51	51	50	51	49	46	51	46	42	51	0	0	51	0	0	50	0	0	49	0	0
		9:12	36.9	Non-Exposed	53	53	53	53	53	53	53	53	53	53	53	53	53	53	53	53	53	53	53	53	53	53	53	53	53	53	53	53	53	53	53	50	53	50	46	52	47	43	51	44	0
				Exposed	53	53	53	53	53	53	53	53	53	53	53	53	53	53	53	53	53	53	53	53	53	53	53	50	53	49	46	53	46	42	53	0	0	53	0	0	52	0	0	49	0	0
		10:12	39.8	Non-Exposed	56	56	56	56	56	56	56	56	56	56	56	56	56	56	56	56	56	56	56	56	56	56	56	56	56	56	56	56	56	54	56	53	50	55	50	46	54	47	43	53	44	0
				Exposed	56	56	56	56	56	56	56	56	56	56	56	56	56	56	56	56	56	55	56	56	52	56	54	50	56	49	46	56	46	42	56	0	0	55	0	0	52	0	0	49	0	0
		11:12	42.5	Non-Exposed	59	59	59	59	59	59	59	59	59	59	59	59	59	59	59	59	59	59	59	59	59	59	59	59	59	59	58	59	57	54	58	53	50	57	50	46	56	47	43	55	44	0
				Exposed	59	59	59	59	59	59	59	59	59	59	59	59	59	59	58	59	59	55	59	56	52	59	54	50	59	49	46	59	46	42	58	0	0	55	0	0	52	0	0	49	0	0
		12:12	45	Non-Exposed	63	63	63	63	63	63	63	63	63	63	63	63	63	63	63	63	63	63	63	63	63	63	63	63	63	62	58	62	57	54	60	53	50	59	50	46	58	47	43	57	44	0
				Exposed	63	63	63	63	63	63	63	63	63	63	63	61	63	62	58	63	59	55	63	56	52	63	54	50	63	49	46	62	46	42	58	0	0	55	0	0	52	0	0	49	0	0

Tamarack 2.3 Rail – Hip Flush-Mount on 30 Foot Maximum Mean Roof Height – Landscape – Panel Width = 45 Inches or Less

Ground Snow Load	Exposure Category	Roof Pitch	Roof Angle	Wind Speed (mph)	95			100			105			110			115			120			125			130			140			150			160			170			180			190		
				Roof Area	1	2	3	1	2	3	1	2	3	1	2	3	1	2	3	1	2	3	1	2	3	1	2	3	1	2	3	1	2	3	1	2	3	1	2	3	1	2	3	1	2	3
80	B	2:12	9.5	Non-Exposed	43	43	43	43	43	43	43	43	43	43	43	43	43	43	43	43	43	43	43	43	43	43	43	43	43	43	43	43	43	43	43	43	43	43	43	43	43	43	43	43	43	43
				Exposed	43	43	43	43	43	43	43	43	43	43	43	43	43	43	43	43	43	43	43	43	43	43	43	43	43	43	43	43	43	43	43	43	43	43	43	43	43	43	43	43	43	43
		3:12	14.0	Non-Exposed	42	42	42	42	42	42	42	42	42	42	42	42	42	42	42	42	42	42	42	42	42	42	42	42	42	42	42	42	42	42	42	42	42	42	42	42	42	42	42	42	42	42
				Exposed	42	42	42	42	42	42	42	42	42	42	42	42	42	42	42	42	42	42	42	42	42	42	42	42	42	42	42	42	42	42	42	42	42	42	42	42	42	42	42	42	42	42
		4:12	18.4	Non-Exposed	42	42	42	42	42	42	42	42	42	42	42	42	42	42	42	42	42	42	42	42	42	42	42	42	42	42	42	42	42	42	42	42	42	42	42	42	42	42	42	42	42	42
				Exposed	42	42	42	42	42	42	42	42	42	42	42	42	42	42	42	42	42	42	42	42	42	42	42	42	42	42	42	42	42	42	42	42	42	42	42	42	42	42	42	42	42	42
		5:12	22.6	Non-Exposed	43	43		43	43		43	43		43	43		43	43		43	43		43	43		43	43		43	43		43	43		43	43		43	43		43	43		43	43	
				Exposed	43	43		43	43		43	43		43	43		43	43		43	43		43	43		43	43		43	43		43	43		43	43		43	43		43	43		43	43	
		6:12	26.6	Non-Exposed	44	44		44	44		44	44		44	44		44	44		44	44		44	44		44	44		44	44		44	44		44	44		44	44		44	44		44	44	
				Exposed	44	44		44	44		44	44		44	44		44	44		44	44		44	44		44	44		44	44		44	44		44	44		44	44		44	44		44	44	
		7:12	30.3	Non-Exposed	46	46	46	46	46	46	46	46	46	46	46	46	46	46	46	46	46	46	46	46	46	46	46	46	46	46	46	46	46	46	46	46	46	46	46	46	46	46	46	46	46	46
				Exposed	46	46	46	46	46	46	46	46	46	46	46	46	46	46	46	46	46	46	46	46	46	46	46	46	46	46	46	46	46	46	46	46	46	46	46	46	46	46	46	46	46	43
		8:12	33.7	Non-Exposed	48	48	48	48	48	48	48	48	48	48	48	48	48	48	48	48	48	48	48	48	48	48	48	48	48	48	48	48	48	48	48	48	48	48	48	48	48	48	48	48	48	48
				Exposed	48	48	48	48	48	48	48	48	48	48	48	48	48	48	48	48	48	48	48	48	48	48	48	48	48	48	48	48	48	48	48	48	48	48	48	46	48	47	43	48	47	43
		9:12	36.9	Non-Exposed	50	50	50	50	50	50	50	50	50	50	50	50	50	50	50	50	50	50	50	50	50	50	50	50	50	50	50	50	50	50	50	50	50	50	50	50	50	50	50	50	50	50
				Exposed	50	50	50	50	50	50	50	50	50	50	50	50	50	50	50	50	50	50	50	50	50	50	50	50	50	50	50	50	50	50	50	50	50	50	49	50	49	46	50	47	43	50	47	43
		10:12	39.8	Non-Exposed	53	53	53	53	53	53	53	53	53	53	53	53	53	53	53	53	53	53	53	53	53	53	53	53	53	53	53	53	53	53	53	53	53	53	53	53	53	53	53	53	53	53
				Exposed	53	53	53	53	53	53	53	53	53	53	53	53	53	53	53	53	53	53	53	53	53	53	53	53	53	53	53	53	53	53	53	53	53	53	49	53	49	46	53	46	43	53	46	43
		11:12	42.5	Non-Exposed	56	56	56	56	56	56	56	56	56	56	56	56	56	56	56	56	56	56	56	56	56	56	56	56	56	56	56	56	56	56	56	56	56	56	56	56	56	56	56	56	56	55
				Exposed	56	56	56	56	56	56	56	56	56	56	56	56	56	56	56	56	56	56	56	56	56	56	56	56	56	56	56	56	56	56	56	56	53	56	53	49	56	49	46	56	46	43
		12:12	45	Non-Exposed	59	59	59	59	59	59	59	59	59	59	59	59	59	59	59	59	59	59	59	59	59	59	59	59	59	59	59	59	59	59	59	59	59	59	59	59	59	59	59	58	55
				Exposed	59	59	59	59	59	59	59	59	59	59	59	59	59	59	59	59	59	59	59	59	59	59	59	59	59	59	59	59	59	57	59	56	53	59	53	49	59	49	46	59	46	43
	C	2:12	9.5	Non-Exposed	43	43	43	43	43	43	43	43	43	43	43	43	43	43	43	43	43	43	43	43	43	43	43	43	43	43	43	43	43	43	43	43	43	43	43	43	43	43	43	43	43	43
				Exposed	43	43	43	43	43	43	43	43	43	43	43	43	43	43	43	43	43	43	43	43	43	43	43	43	43	43	43	43	43	43	43	43	43	43	43	0	43	0	0	43	0	0
		3:12	14.0	Non-Exposed	42	42	42	42	42	42	42	42	42	42	42	42	42	42	42	42	42	42	42	42	42	42	42	42	42	42	42	42	42	42	42	42	42	42	42	42	42	42	42	42	42	42
				Exposed	42	42	42	42	42	42	42	42	42	42	42	42	42	42	42	42	42	42	42	42	42	42	42	42	42	42	42	42	42	42	42	42	42	42	42	0	42	0	0	42	0	0
		4:12	18.4	Non-Exposed	42	42	42	42	42	42	42	42	42	42	42	42	42	42	42	42	42	42	42	42	42	42	42	42	42	42	42	42	42	42	42	42	42	42	42	42	42	42	42	42	42	42
				Exposed	42	42	42	42	42	42	42	42	42	42	42	42	42	42	42	42	42	42	42	42	42	42	42	42	42	42	42	42	42	42	42	42	42	42	42	0	42	0	0	42	0	0
		5:12	22.6	Non-Exposed	43	43		43	43		43	43		43	43		43	43		43	43		43	43		43	43		43	43		43	43		43	43		43	43		43	43		43	43	
				Exposed	43	43		43	43		43	43		43	43		43	43		43	43		43	43		43	43		43	43		43	43		43	43		43	43		43	43		43	43	
		6:12	26.6	Non-Exposed	44	44		44	44		44	44		44	44		44	44		44	44		44	44		44	44		44	44		44	44		44	44		44	44		44	44		44	44	
				Exposed	44	44		44	44		44	44		44	44		44	44		44	44		44	44		44	44		44	44		44	44		44	44		44	44		44	44		44	44	
80		7:12	30.3	Non-Exposed	46	46	46	46	46	46	46	46	46	46	46	46	46	46	46	46	46	46	46	46	46	46	46	46	46	46	46	46	46	46	46	46	46	46	46	46	46	46	46	46	46	45
				Exposed	46	46	46	46	46	46	46	46	46	46	46	46	46	46	46	46	46	46	46	46	46	46	46	46	46	46	46	46	46	46	46	46	43	46	44	0	46	0	0	46	0	0
		8:12	33.7	Non-Exposed	48	48	48	48	48	48	48	48	48	48	48	48	48	48	48	48	48	48	48	48	48	48	48	48	48	48	48	48	48	48	48	48	48	48	48	48	48	48	48	48	48	45
				Exposed	48	48	48	48	48	48	48	48	48	48	48	48	48	48	48	48	48	48	48	48	48	48	48	48	48	48	48	48	47	43	48	44	0	48	0	0	48	0	0	48	0	0
		9:12	36.9	Non-Exposed	50	50	50	50	50	50	50	50	50	50	50	50	50	50	50	50	50	50	50	50	50	50	50	50	50	50	50	50	50	50	50	50	50	50	50	50	50	48	50	48	45
				Exposed	50	50	50	50	50	50	50	50	50	50	50	50	50	50	50	50	50	50	50	50	50	50	50	50	50	50	50	50	47	43	50	44	0	50	0	0	50	0	0	50	0	0
		10:12	39.8	Non-Exposed	53	53	53	53	53	53	53	53	53	53	53	53	53	53	53	53	53	53	53	53	53	53	53	53	53	53	53	53	53	53	53	53	51	53	51	48	52	48	45
				Exposed	53	53	53	53	53	53	53	53	53	53	53	53	53	53	53	53	53	53	53	53	51	53	50	47	53	47	43	53	44	0	53	0	0	52	0	0	52	0	0	52	0	0
		11:12	42.5	Non-Exposed	56	56	56	56	56	56	56	56	56	56	56	56	56	56	56	56	56	56	56	56	56	56	56	56	56	56	55	56	55	51	55	51	48	54	48	45						
				Exposed	56	56	56	56	56	56	56	56	56	56	56	56	56	56	56	56	56	56	56	56	56	56	56	55	56	54	51	56	50	46	56	47	43	56	44	0	55	0	0	53	0	0
		12:12	45	Non-Exposed	59	59	59	59	59	59	59	59	59	59	59	59	59	59	59	59	59	59	59	59	59	59	59	59	59	59	59	59	59	55	58	55	51	57	51	48	56	48	45			
				Exposed	59	59	59	59	59	59	59	59	59	59	59	59	59	59	59	59	59	59	59	59	58	59	59	55	59	54	51	59	50	46	59	47	43	58	43	0	56	0	0	53	0	0
	D	2:12	9.5	Non-Exposed	43	43	43	43	43	43	43	43	43	43	43	43	43	43	43	43	43	43	43	43	43	43	43	43	43	43	43	43	43	43	43	43	43	43	43	43	43	43	43	43	43	0
				Exposed	43	43	43	43	43	43	43	43	43	43	43	43	43	43	43	43	43	43	43	43	43	43	43	43	43	43	43	43	43	43	43	43	0	43	0	0	43	0	0	0	0	0
		3:12	14.0	Non-Exposed	42	42	42	42	42	42	42	42	42	42	42	42	42	42	42	42	42	42	42	42	42	42	42	42	42	42	42	42	42	42	42	42	42	42	42	42	42	42	42	42	42	0
				Exposed	42	42	42	42	42	42	42	42	42	42	42	42	42	42	42	42	42	42	42	42	42	42	42	42	42	42	42	42	42	42	42	42	0	42	0	0	0	0	0	0	0	0
		4:12	18.4	Non-Exposed	42	42	42	42	42	42	42	42	42	42	42	42	42	42	42	42	42	42	42	42	42	42	42	42	42	42	42	42	42	42	42	42	42	42	42	42	42	42	42	42	42	0
				Exposed	42	42	42	42	42	42	42	42	42	42	42	42	42	42	42	42	42	42	42	42	42	42	42	42	42	42	42	42	42	42	42	42	0	42	0	0	0	0	0	0	0	0
		5:12	22.6	Non-Exposed	43	43		43	43		43	43		43	43		43	43		43	43		43	43		43	43		43	43		43	43		43	43		43	43		43	43		43	43	
				Exposed	43	43		43	43		43	43		43	43		43	43		43	43		43	43		43	43		43	43		43	43		43	43		43	43		43	0		43	0	
		6:12	26.6	Non-Exposed	44	44		44	44		44	44		44	44		44	44		44	44		44	44		44	44		44	44		44	44		44	44		44	44		44	44		44	44	
				Exposed	44	44		44	44		44	44		44	44		44	44		44	44		44	44		44	44		44	44		44	44		44	44		44	44		44	0		44	0	
		7:12	30.3	Non-Exposed	46	46	46	46	46	46	46	46	46	46	46	46	46	46	46	46	46	46	46	46	46	46	46	46	46	46	46	46	46	46	46	46	46	46	46	43	46	44	40			
				Exposed	46	46	46	46	46	46	46	46	46	46	46	46	46	46	46	46	46	46	46	46	46	46	46	46	46	46	46	46	42	46	0	0	46	0	0	46	0	0	46	0	0
		8:12	33.7	Non-Exposed	48	48	48	48	48	48	48	48	48	48	48	48	48	48	48	48	48	48	48	48	48	48	48	48	48	48	48	48	48	48	48	48	46	48	47	43	47	44	40			
				Exposed	48	48	48	48	48	48	48	48	48	48	48	48	48	48	48	48	48	48	48	48	48	48	48	48	48	46	48	46	42	48	0	0	48	0	0	48	0	0	47	0	0
		9:12	36.9	Non-Exposed	50	50	50	50	50	50	50	50	50	50	50	50	50	50	50	50	50	50	50	50	50	50	50	50	50	50	50	50	50	50	50	50	46	50	47	43	49	44	0			
				Exposed	50	50	50	50	50	50	50	50	50	50	50	50	50	50	50	50	50	50	50	50	50	50	50	50	49	46	50	46	42	50	0	0	50	0	0	49	0	0	49	0	0
		10:12	39.8	Non-Exposed	53	53	53	53	53	53	53	53	53	53	53	53	53	53	53	53	53	53	53	53	53	53	53	53	53	53	53	53	53	53	53	50	53	50	46	52	47	43	51	44	0	
				Exposed	53	53	53	53	53	53	53	53	53	53	53	53	53	53	53	53	53	53	53	53	52	53	53	50	53	49	46	53	46	42	53	0	0	53	0	0	52	0	0	49	0	0
		11:12	42.5	Non-Exposed	56	56	56	56	56	56	56	56	56	56	56	56	56	56	56	56	56	56	56	56	56	56	56	56	56	56	56	56	56	54	56	53	50	55	50	46	54	47	43	53	44	0
				Exposed	56	56	56	56	56	56	56	56	56	56	56	56	56	56	56	56	56	55	56	56	52	56	54	50	56	49	46	56	46	42	56	0	0	55	0	0	52	0	0	49	0	0
		12:12	45	Non-Exposed	59	59	59	59	59	59	59	59	59	59	59	59	59	59	59	59	59	59	59	59	59	59	59	59	59	59	58	59	57	54	58	53	50	57	50	46	56	47	43	55	44	0
				Exposed	59	59	59	59	59	59	59	59	59	59	59	59	59	59	58	59	59	55	59	56	52	59	54	50	59	49	46	59	46	42	58	0	0	55	0	0	52	0	0	49	0	0

Tamarack 2.3 Rail – Hip Flush-Mount on 30 Foot Maximum Mean Roof Height – Landscape – Panel Width = 45 Inches or Less

Ground Snow Load	Exposure Category	Roof Pitch	Roof Angle	Wind Speed (mph)	95			100			105			110			115			120			125			130			140			150			160			170			180			190		
				Roof Area	1	2	3	1	2	3	1	2	3	1	2	3	1	2	3	1	2	3	1	2	3	1	2	3	1	2	3	1	2	3	1	2	3	1	2	3	1	2	3	1	2	3
90	B	2:12	9.5	Non-Exposed	41	41	41	41	41	41	41	41	41	41	41	41	41	41	41	41	41	41	41	41	41	41	41	41	41	41	41	41	41	41	41	41	41	41	41	41	41	41	41	41	41	41
				Exposed	41	41	41	41	41	41	41	41	41	41	41	41	41	41	41	41	41	41	41	41	41	41	41	41	41	41	41	41	41	41	41	41	41	41	41	41	41	41	41	41	41	41
		3:12	14.0	Non-Exposed	39	39	39	39	39	39	39	39	39	39	39	39	39	39	39	39	39	39	39	39	39	39	39	39	39	39	39	39	39	39	39	39	39	39	39	39	39	39	39	39	39	39
				Exposed	39	39	39	39	39	39	39	39	39	39	39	39	39	39	39	39	39	39	39	39	39	39	39	39	39	39	39	39	39	39	39	39	39	39	39	39	39	39	39	39	39	39
		4:12	18.4	Non-Exposed	39	39	39	39	39	39	39	39	39	39	39	39	39	39	39	39	39	39	39	39	39	39	39	39	39	39	39	39	39	39	39	39	39	39	39	39	39	39	39	39	39	39
				Exposed	39	39	39	39	39	39	39	39	39	39	39	39	39	39	39	39	39	39	39	39	39	39	39	39	39	39	39	39	39	39	39	39	39	39	39	39	39	39	39	39	39	39
		5:12	22.6	Non-Exposed	40	40		40	40		40	40		40	40		40	40		40	40		40	40		40	40		40	40		40	40		40	40		40	40		40	40		40	40	
				Exposed	40	40		40	40		40	40		40	40		40	40		40	40		40	40		40	40		40	40		40	40		40	40		40	40		40	40		40	40	
		6:12	26.6	Non-Exposed	0	0		0	0		0	0		0	0		0	0		0	0		0	0		0	0		0	0		0	0		0	0		0	0		0	0		0	0	
				Exposed	0	0		0	0		0	0		0	0		0	0		0	0		0	0		0	0		0	0		0	0		0	0		0	0		0	0		0	0	
		7:12	30.3	Non-Exposed	0	0	0	0	0	0	0	0	0	0	0	0	0	0	0	0	0	0	0	0	0	0	0	0	0	0	0	0	0	0	0	0	0	0	0	0	0	0	0	0	0	0
				Exposed	0	0	0	0	0	0	0	0	0	0	0	0	0	0	0	0	0	0	0	0	0	0	0	0	0	0	0	0	0	0	0	0	0	0	0	0	0	0	0	0	0	0
		8:12	33.7	Non-Exposed	45	45	45	45	45	45	45	45	45	45	45	45	45	45	45	45	45	45	45	45	45	45	45	45	45	45	45	45	45	45	45	45	45	45	45	45	45	45	45	45	45	45
				Exposed	45	45	45	45	45	45	45	45	45	45	45	45	45	45	45	45	45	45	45	45	45	45	45	45	45	45	45	45	45	45	45	45	45	45	45	45	45	45	45	45	45	43
		9:12	36.9	Non-Exposed	47	47	47	47	47	47	47	47	47	47	47	47	47	47	47	47	47	47	47	47	47	47	47	47	47	47	47	47	47	47	47	47	47	47	47	47	47	47	47	47	47	47
				Exposed	47	47	47	47	47	47	47	47	47	47	47	47	47	47	47	47	47	47	47	47	47	47	47	47	47	47	47	47	47	47	47	47	47	47	47	47	47	47	46	47	47	43
		10:12	39.8	Non-Exposed	50	50	50	50	50	50	50	50	50	50	50	50	50	50	50	50	50	50	50	50	50	50	50	50	50	50	50	50	50	50	50	50	50	50	50	50	50	50	50	50	50	50
				Exposed	50	50	50	50	50	50	50	50	50	50	50	50	50	50	50	50	50	50	50	50	50	50	50	50	50	50	50	50	50	49	50	50	50	50	50	49	50	49	46	50	46	43
		11:12	42.5	Non-Exposed	53	53	53	53	53	53	53	53	53	53	53	53	53	53	53	53	53	53	53	53	53	53	53	53	53	53	53	53	53	53	53	53	53	53	53	53	53	53	53	53	53	53
				Exposed	53	53	53	53	53	53	53	53	53	53	53	53	53	53	53	53	53	53	53	53	53	53	53	53	53	53	53	53	53	49	53	53	53	53	53	49	53	49	46	53	46	43
		12:12	45	Non-Exposed	56	56	56	56	56	56	56	56	56	56	56	56	56	56	56	56	56	56	56	56	56	56	56	56	56	56	56	56	56	56	56	56	56	56	56	56	56	56	56	56	55	55
				Exposed	56	56	56	56	56	56	56	56	56	56	56	56	56	56	56	56	56	56	56	56	56	56	56	56	56	56	56	56	56	53	56	53	49	56	49	46	56	46	43	56	46	43
	C	2:12	9.5	Non-Exposed	41	41	41	41	41	41	41	41	41	41	41	41	41	41	41	41	41	41	41	41	41	41	41	41	41	41	41	41	41	41	41	41	41	41	41	41	41	41	41	41	41	41
				Exposed	41	41	41	41	41	41	41	41	41	41	41	41	41	41	41	41	41	41	41	41	41	41	41	41	41	41	41	41	41	41	41	41	41	41	41	0	41	0	0	41	0	0
		3:12	14.0	Non-Exposed	39	39	39	39	39	39	39	39	39	39	39	39	39	39	39	39	39	39	39	39	39	39	39	39	39	39	39	39	39	39	39	39	39	39	39	39	39	39	39	39	39	39
				Exposed	39	39	39	39	39	39	39	39	39	39	39	39	39	39	39	39	39	39	39	39	39	39	39	39	39	39	39	39	39	39	39	39	39	39	39	0	39	0	0	39	0	0
		4:12	18.4	Non-Exposed	39	39	39	39	39	39	39	39	39	39	39	39	39	39	39	39	39	39	39	39	39	39	39	39	39	39	39	39	39	39	39	39	39	39	39	39	39	39	39	39	39	39
				Exposed	39	39	39	39	39	39	39	39	39	39	39	39	39	39	39	39	39	39	39	39	39	39	39	39	39	39	39	39	39	39	39	39	39	39	39	0	39	0	0	39	0	0
		5:12	22.6	Non-Exposed	40	40		40	40		40	40		40	40		40	40		40	40		40	40		40	40		40	40		40	40		40	40		40	40		40	40		40	40	
				Exposed	40	40		40	40		40	40		40	40		40	40		40	40		40	40		40	40		40	40		40	40		40	40		40	40		40	40		40	40	
		6:12	26.6	Non-Exposed	0	0		0	0		0	0		0	0		0	0		0	0		0	0		0	0		0	0		0	0		0	0		0	0		0	0		0	0	
				Exposed	0	0		0	0		0	0		0	0		0	0		0	0		0	0		0	0		0	0		0	0		0	0		0	0		0	0		0	0	
		7:12	30.3	Non-Exposed	0	0	0	0	0	0	0	0	0	0	0	0	0	0	0	0	0	0	0	0	0	0	0	0	0	0	0	0	0	0	0	0	0	0	0	0	0	0	0	0	0	0
				Exposed	0	0	0	0	0	0	0	0	0	0	0	0	0	0	0	0	0	0	0	0	0	0	0	0	0	0	0	0	0	0	0	0	0	0	0	0	0	0	0	0	0	0
		8:12	33.7	Non-Exposed	45	45	45	45	45	45	45	45	45	45	45	45	45	45	45	45	45	45	45	45	45	45	45	45	45	45	45	45	45	45	45	45	45	45	45	45	45	45	45	45	45	45
				Exposed	45	45	45	45	45	45	45	45	45	45	45	45	45	45	45	45	45	45	45	45	45	45	45	45	45	45	45	45	45	43	45	44	0	45	0	0	45	0	0	45	0	0
		9:12	36.9	Non-Exposed	47	47	47	47	47	47	47	47	47	47	47	47	47	47	47	47	47	47	47	47	47	47	47	47	47	47	47	47	47	47	47	47	47	47	47	47	47	47	47	47	47	45
				Exposed	47	47	47	47	47	47	47	47	47	47	47	47	47	47	47	47	47	47	47	47	47	47	47	47	47	47	47	47	47	43	47	44	0	47	0	0	47	0	0	47	0	0
		10:12	39.8	Non-Exposed	50	50	50	50	50	50	50	50	50	50	50	50	50	50	50	50	50	50	50	50	50	50	50	50	50	50	50	50	50	50	50	50	50	50	50	48	50	48	45	50	48	45
				Exposed	50	50	50	50	50	50	50	50	50	50	50	50	50	50	50	50	50	50	50	50	50	50	50	50	50	50	50	47	50	47	43	50	44	0	50	0	0	50	0	0	50	0	0
		11:12	42.5	Non-Exposed	53	53	53	53	53	53	53	53	53	53	53	53	53	53	53	53	53	53	53	53	53	53	53	53	53	53	53	53	53	53	53	53	51	53	51	48	53	51	48	52	48	45
				Exposed	53	53	53	53	53	53	53	53	53	53	53	53	53	53	53	53	53	53	53	53	53	53	53	53	53	53	51	53	50	46	53	47	43	53	44	0	53	0	0	52	0	0
		12:12	45	Non-Exposed	56	56	56	56	56	56	56	56	56	56	56	56	56	56	56	56	56	56	56	56	56	56	56	56	56	56	56	56	56	56	56	56	55	56	55	51	55	51	48	54	48	45
				Exposed	56	56	56	56	56	56	56	56	56	56	56	56	56	56	56	56	56	56	56	56	56	56	56	55	56	54	51	56	50	46	56	47	43	56	43	0	55	0	0	53	0	0
	D	2:12	9.5	Non-Exposed	41	41	41	41	41	41	41	41	41	41	41	41	41	41	41	41	41	41	41	41	41	41	41	41	41	41	41	41	41	41	41	41	41	41	41	41	41	41	41	41	41	0
				Exposed	41	41	41	41	41	41	41	41	41	41	41	41	41	41	41	41	41	41	41	41	41	41	41	41	41	41	41	41	41	41	41	41	0	41	0	0	41	0	0	0	0	0
		3:12	14.0	Non-Exposed	39	39	39	39	39	39	39	39	39	39	39	39	39	39	39	39	39	39	39	39	39	39	39	39	39	39	39	39	39	39	39	39	39	39	39	39	39	39	39	39	39	0
				Exposed	39	39	39	39	39	39	39	39	39	39	39	39	39	39	39	39	39	39	39	39	39	39	39	39	39	39	39	39	39	39	39	39	0	39	0	0	0	0	0	0	0	0
		4:12	18.4	Non-Exposed	39	39	39	39	39	39	39	39	39	39	39	39	39	39	39	39	39	39	39	39	39	39	39	39	39	39	39	39	39	39	39	39	39	39	39	39	39	39	39	39	39	0
				Exposed	39	39	39	39	39	39	39	39	39	39	39	39	39	39	39	39	39	39	39	39	39	39	39	39	39	39	39	39	39	39	39	39	0	39	0	0	0	0	0	0	0	0
		5:12	22.6	Non-Exposed	40	40		40	40		40	40		40	40		40	40		40	40		40	40		40	40		40	40		40	40		40	40		40	40		40	40		40	40	
				Exposed	40	40		40	40		40	40		40	40		40	40		40	40		40	40		40	40		40	40		40	40		40	40		40	40		40	0		40	0	
		6:12	26.6	Non-Exposed	0	0		0	0		0	0		0	0		0	0		0	0		0	0		0	0		0	0		0	0		0	0		0	0		0	0		0	0	
				Exposed	0	0		0	0		0	0		0	0		0	0		0	0		0	0		0	0		0	0		0	0		0	0		0	0		0	0		0	0	
		7:12	30.3	Non-Exposed	0	0	0	0	0	0	0	0	0	0	0	0	0	0	0	0	0	0	0	0	0	0	0	0	0	0	0	0	0	0	0	0	0	0	0	0	0	0	0	0	0	0
				Exposed	0	0	0	0	0	0	0	0	0	0	0	0	0	0	0	0	0	0	0	0	0	0	0	0	0	0	0	0	0	0	0	0	0	0	0	0	0	0	0	0	0	0
		8:12	33.7	Non-Exposed	45	45	45	45	45	45	45	45	45	45	45	45	45	45	45	45	45	45	45	45	45	45	45	45	45	45	45	45	45	45	45	45	45	45	45	43	45	44	40	45	44	40
				Exposed	45	45	45	45	45	45	45	45	45	45	45	45	45	45	45	45	45	45	45	45	45	45	45	45	45	45	45	42	45	0	0	45	0	0	45	0	0	45	0	0	45	0
		9:12	36.9	Non-Exposed	47	47	47	47	47	47	47	47	47	47	47	47	47	47	47	47	47	47	47	47	47	47	47	47	47	47	47	47	47	47	47	47	46	47	47	43	47	44	0	47	44	0
				Exposed	47	47	47	47	47	47	47	47	47	47	47	47	47	47	47	47	47	47	47	47	47	47	47	47	47	47	46	42	47	0	0	47	0	0	47	0	0	47	0	0	47	0
		10:12	39.8	Non-Exposed	50	50	50	50	50	50	50	50	50	50	50	50	50	50	50	50	50	50	50	50	50	50	50	50	50	50	50	50	50	50	50	50	46	50	47	43	49	44	0	49	44	0
				Exposed	50	50	50	50	50	50	50	50	50	50	50	50	50	50	50	50	50	50	50	50	50	50	50	50	50	49	46	50	46	42	50	0	0	50	0	0	49	0	0	49	0	0
		11:12	42.5	Non-Exposed	53	53	53	53	53	53	53	53	53	53	53	53	53	53	53	53	53	53	53	53	53	53	53	53	53	53	53	53	53	53	53	50	53	50	46	52	47	43	51	44	0
				Exposed	53	53	53	53	53	53	53	53	53	53	53	53	53	53	53	53	53	53	53	53	52	53	53	50	53	49	46	53	46	42	53	0	0	53	0	0	52	0	0	49	0	0
		12:12	45	Non-Exposed	56	56	56	56	56	56	56	56	56	56	56	56	56	56	56	56	56	56	56	56	56	56	56	56	56	56	56	54	56	53	50	55	50	46	54	47	43	53	44	0
				Exposed	56	56	56	56	56	56	56	56	56	56	56	56	56	56	56	56	56	55	56	56	52	56	54	50	56	49	46	56	46	42	56	0	0	55	0	0	52	0	0	49	0	0

Tamarack 2.3 Rail – Hip Flush-Mount on 30 Foot Maximum Mean Roof Height – Landscape – Panel Width = 45 Inches or Less

Ground Snow Load	Exposure Category	Roof Pitch	Roof Angle	Wind Speed (mph)	95			100			105			110			115			120			125			130			140			150			160			170			180			190		
				Roof Area	1	2	3	1	2	3	1	2	3	1	2	3	1	2	3	1	2	3	1	2	3	1	2	3	1	2	3	1	2	3	1	2	3	1	2	3	1	2	3	1	2	3
100	B	2:12	9.5	Non-Exposed	39	39	39	39	39	39	39	39	39	39	39	39	39	39	39	39	39	39	39	39	39	39	39	39	39	39	39	39	39	39	39	39	39	39	39	39	39	39	39	39	39	39
				Exposed	39	39	39	39	39	39	39	39	39	39	39	39	39	39	39	39	39	39	39	39	39	39	39	39	39	39	39	39	39	39	39	39	39	39	39	39	39	39	39	39	39	39
		3:12	14.0	Non-Exposed	37	37	37	37	37	37	37	37	37	37	37	37	37	37	37	37	37	37	37	37	37	37	37	37	37	37	37	37	37	37	37	37	37	37	37	37	37	37	37	37	37	37
				Exposed	37	37	37	37	37	37	37	37	37	37	37	37	37	37	37	37	37	37	37	37	37	37	37	37	37	37	37	37	37	37	37	37	37	37	37	37	37	37	37	37	37	37
		4:12	18.4	Non-Exposed	37	37	37	37	37	37	37	37	37	37	37	37	37	37	37	37	37	37	37	37	37	37	37	37	37	37	37	37	37	37	37	37	37	37	37	37	37	37	37	37	37	37
				Exposed	37	37	37	37	37	37	37	37	37	37	37	37	37	37	37	37	37	37	37	37	37	37	37	37	37	37	37	37	37	37	37	37	37	37	37	37	37	37	37	37	37	37
		5:12	22.6	Non-Exposed	0	0		0	0		0	0		0	0		0	0		0	0		0	0		0	0		0	0		0	0		0	0		0	0		0	0		0	0	
				Exposed	0	0		0	0		0	0		0	0		0	0		0	0		0	0		0	0		0	0		0	0		0	0		0	0		0	0		0	0	
		6:12	26.6	Non-Exposed	0	0		0	0		0	0		0	0		0	0		0	0		0	0		0	0		0	0		0	0		0	0		0	0		0	0		0	0	
				Exposed	0	0		0	0		0	0		0	0		0	0		0	0		0	0		0	0		0	0		0	0		0	0		0	0		0	0		0	0	
		7:12	30.3	Non-Exposed	0	0	0	0	0	0	0	0	0	0	0	0	0	0	0	0	0	0	0	0	0	0	0	0	0	0	0	0	0	0	0	0	0	0	0	0	0	0	0	0	0	0
				Exposed	0	0	0	0	0	0	0	0	0	0	0	0	0	0	0	0	0	0	0	0	0	0	0	0	0	0	0	0	0	0	0	0	0	0	0	0	0	0	0	0	0	0
		8:12	33.7	Non-Exposed	0	0	0	0	0	0	0	0	0	0	0	0	0	0	0	0	0	0	0	0	0	0	0	0	0	0	0	0	0	0	0	0	0	0	0	0	0	0	0	0	0	0
				Exposed	0	0	0	0	0	0	0	0	0	0	0	0	0	0	0	0	0	0	0	0	0	0	0	0	0	0	0	0	0	0	0	0	0	0	0	0	0	0	0	0	0	0
		9:12	36.9	Non-Exposed	0	0	0	0	0	0	0	0	0	0	0	0	0	0	0	0	0	0	0	0	0	0	0	0	0	0	0	0	0	0	0	0	0	0	0	0	0	0	0	0	0	0
				Exposed	0	0	0	0	0	0	0	0	0	0	0	0	0	0	0	0	0	0	0	0	0	0	0	0	0	0	0	0	0	0	0	0	0	0	0	0	0	0	0	0	0	0
		10:12	39.8	Non-Exposed	47	47	47	47	47	47	47	47	47	47	47	47	47	47	47	47	47	47	47	47	47	47	47	47	47	47	47	47	47	47	47	47	47	47	47	47	47	47	47	47	47	45
				Exposed	47	47	47	47	47	47	47	47	47	47	47	47	47	47	47	47	47	47	47	47	47	47	47	47	47	47	47	47	47	47	47	47	43	47	44	0	47	0	0	47	0	0
		11:12	42.5	Non-Exposed	50	50	50	50	50	50	50	50	50	50	50	50	50	50	50	50	50	50	50	50	50	50	50	50	50	50	50	50	50	50	50	50	50	50	50	50	50	50	48	50	48	45
				Exposed	50	50	50	50	50	50	50	50	50	50	50	50	50	50	50	50	50	50	50	50	50	50	50	50	50	50	50	50	50	46	50	47	43	50	44	0	50	0	0	50	0	0
		12:12	45	Non-Exposed	53	53	53	53	53	53	53	53	53	53	53	53	53	53	53	53	53	53	53	53	53	53	53	53	53	53	53	53	53	53	53	53	53	53	53	51	53	51	48	52	48	45
				Exposed	53	53	53	53	53	53	53	53	53	53	53	53	53	53	53	53	53	53	53	53	53	53	53	53	53	53	51	53	50	46	53	47	43	53	43	0	53	0	0	52	0	0
	C	2:12	9.5	Non-Exposed	39	39	39	39	39	39	39	39	39	39	39	39	39	39	39	39	39	39	39	39	39	39	39	39	39	39	39	39	39	39	39	39	39	39	39	39	39	39	39	39	39	39
				Exposed	39	39	39	39	39	39	39	39	39	39	39	39	39	39	39	39	39	39	39	39	39	39	39	39	39	39	39	39	39	39	39	39	39	39	39	0	39	0	0	39	0	0
		3:12	14.0	Non-Exposed	37	37	37	37	37	37	37	37	37	37	37	37	37	37	37	37	37	37	37	37	37	37	37	37	37	37	37	37	37	37	37	37	37	37	37	37	37	37	37	37	37	37
				Exposed	37	37	37	37	37	37	37	37	37	37	37	37	37	37	37	37	37	37	37	37	37	37	37	37	37	37	37	37	37	37	37	37	37	37	37	0	37	0	0	37	0	0
		4:12	18.4	Non-Exposed	37	37	37	37	37	37	37	37	37	37	37	37	37	37	37	37	37	37	37	37	37	37	37	37	37	37	37	37	37	37	37	37	37	37	37	37	37	37	37	37	37	37
				Exposed	37	37	37	37	37	37	37	37	37	37	37	37	37	37	37	37	37	37	37	37	37	37	37	37	37	37	37	37	37	37	37	37	37	37	37	0	37	0	0	37	0	0
		5:12	22.6	Non-Exposed	0	0		0	0		0	0		0	0		0	0		0	0		0	0		0	0		0	0		0	0		0	0		0	0		0	0		0	0	
				Exposed	0	0		0	0		0	0		0	0		0	0		0	0		0	0		0	0		0	0		0	0		0	0		0	0		0	0		0	0	
		6:12	26.6	Non-Exposed	0	0		0	0		0	0		0	0		0	0		0	0		0	0		0	0		0	0		0	0		0	0		0	0		0	0		0	0	
				Exposed	0	0		0	0		0	0		0	0		0	0		0	0		0	0		0	0		0	0		0	0		0	0		0	0		0	0		0	0	
		7:12	30.3	Non-Exposed	0	0	0	0	0	0	0	0	0	0	0	0	0	0	0	0	0	0	0	0	0	0	0	0	0	0	0	0	0	0	0	0	0	0	0	0	0	0	0	0	0	0
				Exposed	0	0	0	0	0	0	0	0	0	0	0	0	0	0	0	0	0	0	0	0	0	0	0	0	0	0	0	0	0	0	0	0	0	0	0	0	0	0	0	0	0	0
		8:12	33.7	Non-Exposed	0	0	0	0	0	0	0	0	0	0	0	0	0	0	0	0	0	0	0	0	0	0	0	0	0	0	0	0	0	0	0	0	0	0	0	0	0	0	0	0	0	0
				Exposed	0	0	0	0	0	0	0	0	0	0	0	0	0	0	0	0	0	0	0	0	0	0	0	0	0	0	0	0	0	0	0	0	0	0	0	0	0	0	0	0	0	0
		9:12	36.9	Non-Exposed	0	0	0	0	0	0	0	0	0	0	0	0	0	0	0	0	0	0	0	0	0	0	0	0	0	0	0	0	0	0	0	0	0	0	0	0	0	0	0	0	0	0
				Exposed	0	0	0	0	0	0	0	0	0	0	0	0	0	0	0	0	0	0	0	0	0	0	0	0	0	0	0	0	0	0	0	0	0	0	0	0	0	0	0	0	0	0
		10:12	39.8	Non-Exposed	47	47	47	47	47	47	47	47	47	47	47	47	47	47	47	47	47	47	47	47	47	47	47	47	47	47	47	47	47	47	47	47	47	47	47	46	47	47	43	47	44	0
				Exposed	47	47	47	47	47	47	47	47	47	47	47	47	47	47	47	47	47	47	47	47	47	47	47	47	47	47	46	47	46	42	47	0	0	47	0	0	47	0	0	47	0	0
		11:12	42.5	Non-Exposed	50	50	50	50	50	50	50	50	50	50	50	50	50	50	50	50	50	50	50	50	50	50	50	50	50	50	50	50	50	50	50	50	50	50	50	46	50	47	43	49	44	0
				Exposed	50	50	50	50	50	50	50	50	50	50	50	50	50	50	50	50	50	50	50	50	50	50	50	50	50	49	46	50	46	42	50	0	0	50	0	0	50	0	0	49	0	0
		12:12	45	Non-Exposed	53	53	53	53	53	53	53	53	53	53	53	53	53	53	53	53	53	53	53	53	53	53	53	53	53	53	53	53	53	53	53	53	50	53	50	46	52	47	43	51	44	0
				Exposed	53	53	53	53	53	53	53	53	53	53	53	53	53	53	53	53	53	53	53	53	52	53	53	50	53	49	46	53	46	42	53	0	0	53	0	0	52	0	0	49	0	0
	D	2:12	9.5	Non-Exposed	39	39	39	39	39	39	39	39	39	39	39	39	39	39	39	39	39	39	39	39	39	39	39	39	39	39	39	39	39	39	39	39	39	39	39	39	39	39	39	39	39	0
				Exposed	39	39	39	39	39	39	39	39	39	39	39	39	39	39	39	39	39	39	39	39	39	39	39	39	39	39	39	39	39	39	39	39	0	39	0	0	39	0	0	0	0	0
		3:12	14.0	Non-Exposed	37	37	37	37	37	37	37	37	37	37	37	37	37	37	37	37	37	37	37	37	37	37	37	37	37	37	37	37	37	37	37	37	37	37	37	37	37	37	37	37	37	0
				Exposed	37	37	37	37	37	37	37	37	37	37	37	37	37	37	37	37	37	37	37	37	37	37	37	37	37	37	37	37	37	37	37	37	0	37	0	0	0	0	0	0	0	0
		4:12	18.4	Non-Exposed	37	37	37	37	37	37	37	37	37	37	37	37	37	37	37	37	37	37	37	37	37	37	37	37	37	37	37	37	37	37	37	37	37	37	37	37	37	37	37	37	37	0
				Exposed	37	37	37	37	37	37	37	37	37	37	37	37	37	37	37	37	37	37	37	37	37	37	37	37	37	37	37	37	37	37	37	37	0	37	0	0	0	0	0	0	0	0
		5:12	22.6	Non-Exposed	0	0		0	0		0	0		0	0		0	0		0	0		0	0		0	0		0	0		0	0		0	0		0	0		0	0		0	0	
				Exposed	0	0		0	0		0	0		0	0		0	0		0	0		0	0		0	0		0	0		0	0		0	0		0	0		0	0		0	0	
		6:12	26.6	Non-Exposed	0	0		0	0		0	0		0	0		0	0		0	0		0	0		0	0		0	0		0	0		0	0		0	0		0	0		0	0	
				Exposed	0	0		0	0		0	0		0	0		0	0		0	0		0	0		0	0		0	0		0	0		0	0		0	0		0	0		0	0	
		7:12	30.3	Non-Exposed	0	0	0	0	0	0	0	0	0	0	0	0	0	0	0	0	0	0	0	0	0	0	0	0	0	0	0	0	0	0	0	0	0	0	0	0	0	0	0	0	0	0
				Exposed	0	0	0	0	0	0	0	0	0	0	0	0	0	0	0	0	0	0	0	0	0	0	0	0	0	0	0	0	0	0	0	0	0	0	0	0	0	0	0	0	0	0
		8:12	33.7	Non-Exposed	0	0	0	0	0	0	0	0	0	0	0	0	0	0	0	0	0	0	0	0	0	0	0	0	0	0	0	0	0	0	0	0	0	0	0	0	0	0	0	0	0	0
				Exposed	0	0	0	0	0	0	0	0	0	0	0	0	0	0	0	0	0	0	0	0	0	0	0	0	0	0	0	0	0	0	0	0	0	0	0	0	0	0	0	0	0	0
		9:12	36.9	Non-Exposed	0	0	0	0	0	0	0	0	0	0	0	0	0	0	0	0	0	0	0	0	0	0	0	0	0	0	0	0	0	0	0	0	0	0	0	0	0	0	0	0	0	0
				Exposed	0	0	0	0	0	0	0	0	0	0	0	0	0	0	0	0	0	0	0	0	0	0	0	0	0	0	0	0	0	0	0	0	0	0	0	0	0	0	0	0	0	0
		10:12	39.8	Non-Exposed	47	47	47	47	47	47	47	47	47	47	47	47	47	47	47	47	47	47	47	47	47	47	47	47	47	47	47	47	47	47	47	47	47	47	47	46	47	47	43	47	44	0
				Exposed	47	47	47	47	47	47	47	47	47	47	47	47	47	47	47	47	47	47	47	47	47	47	47	47	47	47	46	47	46	42	47	0	0	47	0	0	47	0	0	47	0	0
		11:12	42.5	Non-Exposed	50	50	50	50	50	50	50	50	50	50	50	50	50	50	50	50	50	50	50	50	50	50	50	50	50	50	50	50	50	50	50	50	50	50	50	46	50	47	43	49	44	0
				Exposed	50	50	50	50	50	50	50	50	50	50	50	50	50	50	50	50	50	50	50	50	50	50	50	50	50	49	46	50	46	42	50	0	0	50	0	0	50	0	0	49	0	0
		12:12	45	Non-Exposed	53	53	53	53	53	53	53	53	53	53	53	53	53	53	53	53	53	53	53	53	53	53	53	53	53	53	53	53	53	53	53	53	50	53	50	46	52	47	43	51	44	0
				Exposed	53	53	53	53	53	53	53	53	53	53	53	53	53	53	53	53	53	53	53	53	52	53	53	50	53	49	46	53	46	42	53	0	0	53	0	0	52	0	0	49	0	0

Tamarack 2.3 Rail – Hip Flush-Mount on 30 Foot Maximum Mean Roof Height – Landscape – Panel Width = 45 Inches or Less

Ground Snow Load	Exposure Category	Roof Pitch	Roof Angle	Wind Speed (mph)	95			100			105			110			115			120			125			130			140			150			160			170			180			190		
				Roof Area	1	2	3	1	2	3	1	2	3	1	2	3	1	2	3	1	2	3	1	2	3	1	2	3	1	2	3	1	2	3	1	2	3	1	2	3	1	2	3	1	2	3
110	B	2:12	9.5	Non-Exposed	37	37	37	37	37	37	37	37	37	37	37	37	37	37	37	37	37	37	37	37	37	37	37	37	37	37	37	37	37	37	37	37	37	37	37	37	37	37	37	37	37	37
				Exposed	37	37	37	37	37	37	37	37	37	37	37	37	37	37	37	37	37	37	37	37	37	37	37	37	37	37	37	37	37	37	37	37	37	37	37	37	37	37	37	37	37	37
		3:12	14.0	Non-Exposed	35	35	35	35	35	35	35	35	35	35	35	35	35	35	35	35	35	35	35	35	35	35	35	35	35	35	35	35	35	35	35	35	35	35	35	35	35	35	35	35	35	35
				Exposed	35	35	35	35	35	35	35	35	35	35	35	35	35	35	35	35	35	35	35	35	35	35	35	35	35	35	35	35	35	35	35	35	35	35	35	35	35	35	35	35	35	35
		4:12	18.4	Non-Exposed	0	0	0	0	0	0	0	0	0	0	0	0	0	0	0	0	0	0	0	0	0	0	0	0	0	0	0	0	0	0	0	0	0	0	0	0	0	0	0	0	0	0
				Exposed	0	0	0	0	0	0	0	0	0	0	0	0	0	0	0	0	0	0	0	0	0	0	0	0	0	0	0	0	0	0	0	0	0	0	0	0	0	0	0	0	0	0
		5:12	22.6	Non-Exposed	0	0		0	0		0	0		0	0		0	0		0	0		0	0		0	0		0	0		0	0		0	0		0	0		0	0		0	0	
				Exposed	0	0		0	0		0	0		0	0		0	0		0	0		0	0		0	0		0	0		0	0		0	0		0	0		0	0		0	0	
		6:12	26.6	Non-Exposed	0	0		0	0		0	0		0	0		0	0		0	0		0	0		0	0		0	0		0	0		0	0		0	0		0	0		0	0	
				Exposed	0	0		0	0		0	0		0	0		0	0		0	0		0	0		0	0		0	0		0	0		0	0		0	0		0	0		0	0	
		7:12	30.3	Non-Exposed	0	0	0	0	0	0	0	0	0	0	0	0	0	0	0	0	0	0	0	0	0	0	0	0	0	0	0	0	0	0	0	0	0	0	0	0	0	0	0	0	0	0
				Exposed	0	0	0	0	0	0	0	0	0	0	0	0	0	0	0	0	0	0	0	0	0	0	0	0	0	0	0	0	0	0	0	0	0	0	0	0	0	0	0	0	0	0
		8:12	33.7	Non-Exposed	0	0	0	0	0	0	0	0	0	0	0	0	0	0	0	0	0	0	0	0	0	0	0	0	0	0	0	0	0	0	0	0	0	0	0	0	0	0	0	0	0	0
				Exposed	0	0	0	0	0	0	0	0	0	0	0	0	0	0	0	0	0	0	0	0	0	0	0	0	0	0	0	0	0	0	0	0	0	0	0	0	0	0	0	0	0	0
		9:12	36.9	Non-Exposed	0	0	0	0	0	0	0	0	0	0	0	0	0	0	0	0	0	0	0	0	0	0	0	0	0	0	0	0	0	0	0	0	0	0	0	0	0	0	0	0	0	0
				Exposed	0	0	0	0	0	0	0	0	0	0	0	0	0	0	0	0	0	0	0	0	0	0	0	0	0	0	0	0	0	0	0	0	0	0	0	0	0	0	0	0	0	0
		10:12	39.8	Non-Exposed	0	0	0	0	0	0	0	0	0	0	0	0	0	0	0	0	0	0	0	0	0	0	0	0	0	0	0	0	0	0	0	0	0	0	0	0	0	0	0	0	0	0
				Exposed	0	0	0	0	0	0	0	0	0	0	0	0	0	0	0	0	0	0	0	0	0	0	0	0	0	0	0	0	0	0	0	0	0	0	0	0	0	0	0	0	0	0
		11:12	42.5	Non-Exposed	0	0	0	0	0	0	0	0	0	0	0	0	0	0	0	0	0	0	0	0	0	0	0	0	0	0	0	0	0	0	0	0	0	0	0	0	0	0	0	0	0	0
				Exposed	0	0	0	0	0	0	0	0	0	0	0	0	0	0	0	0	0	0	0	0	0	0	0	0	0	0	0	0	0	0	0	0	0	0	0	0	0	0	0	0	0	0
		12:12	45	Non-Exposed	51	51	51	51	51	51	51	51	51	51	51	51	51	51	51	51	51	51	51	51	51	51	51	51	51	51	51	51	51	51	51	51	51	51	51	51	51	51	51	51	51	51
				Exposed	51	51	51	51	51	51	51	51	51	51	51	51	51	51	51	51	51	51	51	51	51	51	51	51	51	51	51	51	51	51	51	51	51	51	51	49	51	49	46	51	46	43
	C	2:12	9.5	Non-Exposed	37	37	37	37	37	37	37	37	37	37	37	37	37	37	37	37	37	37	37	37	37	37	37	37	37	37	37	37	37	37	37	37	37	37	37	37	37	37	37	37	37	37
				Exposed	37	37	37	37	37	37	37	37	37	37	37	37	37	37	37	37	37	37	37	37	37	37	37	37	37	37	37	37	37	37	37	37	37	37	37	0	37	0	0	37	0	0
		3:12	14.0	Non-Exposed	35	35	35	35	35	35	35	35	35	35	35	35	35	35	35	35	35	35	35	35	35	35	35	35	35	35	35	35	35	35	35	35	35	35	35	35	35	35	35	35	35	35
				Exposed	35	35	35	35	35	35	35	35	35	35	35	35	35	35	35	35	35	35	35	35	35	35	35	35	35	35	35	35	35	35	35	35	35	35	35	0	35	0	0	35	0	0
		4:12	18.4	Non-Exposed	0	0	0	0	0	0	0	0	0	0	0	0	0	0	0	0	0	0	0	0	0	0	0	0	0	0	0	0	0	0	0	0	0	0	0	0	0	0	0	0	0	0
				Exposed	0	0	0	0	0	0	0	0	0	0	0	0	0	0	0	0	0	0	0	0	0	0	0	0	0	0	0	0	0	0	0	0	0	0	0	0	0	0	0	0	0	0
		5:12	22.6	Non-Exposed	0	0		0	0		0	0		0	0		0	0		0	0		0	0		0	0		0	0		0	0		0	0		0	0		0	0		0	0	
				Exposed	0	0		0	0		0	0		0	0		0	0		0	0		0	0		0	0		0	0		0	0		0	0		0	0		0	0		0	0	
		6:12	26.6	Non-Exposed	0	0		0	0		0	0		0	0		0	0		0	0		0	0		0	0		0	0		0	0		0	0		0	0		0	0		0	0	
				Exposed	0	0		0	0		0	0		0	0		0	0		0	0		0	0		0	0		0	0		0	0		0	0		0	0		0	0		0	0	
		7:12	30.3	Non-Exposed	0	0	0	0	0	0	0	0	0	0	0	0	0	0	0	0	0	0	0	0	0	0	0	0	0	0	0	0	0	0	0	0	0	0	0	0	0	0	0	0	0	0
				Exposed	0	0	0	0	0	0	0	0	0	0	0	0	0	0	0	0	0	0	0	0	0	0	0	0	0	0	0	0	0	0	0	0	0	0	0	0	0	0	0	0	0	0
		8:12	33.7	Non-Exposed	0	0	0	0	0	0	0	0	0	0	0	0	0	0	0	0	0	0	0	0	0	0	0	0	0	0	0	0	0	0	0	0	0	0	0	0	0	0	0	0	0	0
				Exposed	0	0	0	0	0	0	0	0	0	0	0	0	0	0	0	0	0	0	0	0	0	0	0	0	0	0	0	0	0	0	0	0	0	0	0	0	0	0	0	0	0	0
		9:12	36.9	Non-Exposed	0	0	0	0	0	0	0	0	0	0	0	0	0	0	0	0	0	0	0	0	0	0	0	0	0	0	0	0	0	0	0	0	0	0	0	0	0	0	0	0	0	0
				Exposed	0	0	0	0	0	0	0	0	0	0	0	0	0	0	0	0	0	0	0	0	0	0	0	0	0	0	0	0	0	0	0	0	0	0	0	0	0	0	0	0	0	0
		10:12	39.8	Non-Exposed	0	0	0	0	0	0	0	0	0	0	0	0	0	0	0	0	0	0	0	0	0	0	0	0	0	0	0	0	0	0	0	0	0	0	0	0	0	0	0	0	0	0
				Exposed	0	0	0	0	0	0	0	0	0	0	0	0	0	0	0	0	0	0	0	0	0	0	0	0	0	0	0	0	0	0	0	0	0	0	0	0	0	0	0	0	0	0
		11:12	42.5	Non-Exposed	0	0	0	0	0	0	0	0	0	0	0	0	0	0	0	0	0	0	0	0	0	0	0	0	0	0	0	0	0	0	0	0	0	0	0	0	0	0	0	0	0	0
				Exposed	0	0	0	0	0	0	0	0	0	0	0	0	0	0	0	0	0	0	0	0	0	0	0	0	0	0	0	0	0	0	0	0	0	0	0	0	0	0	0	0	0	0
		12:12	45	Non-Exposed	51	51	51	51	51	51	51	51	51	51	51	51	51	51	51	51	51	51	51	51	51	51	51	51	51	51	51	51	51	51	51	51	51	51	51	51	51	48	51	48	45
				Exposed	51	51	51	51	51	51	51	51	51	51	51	51	51	51	51	51	51	51	51	51	51	51	51	51	51	51	51	50	46	51	47	43	51	43	0	51	0	0	51	0	0
	D	2:12	9.5	Non-Exposed	37	37	37	37	37	37	37	37	37	37	37	37	37	37	37	37	37	37	37	37	37	37	37	37	37	37	37	37	37	37	37	37	37	37	37	37	37	37	37	37	37	0
				Exposed	37	37	37	37	37	37	37	37	37	37	37	37	37	37	37	37	37	37	37	37	37	37	37	37	37	37	37	37	37	37	37	0	37	0	0	37	0	0	0	0	0	0
		3:12	14.0	Non-Exposed	35	35	35	35	35	35	35	35	35	35	35	35	35	35	35	35	35	35	35	35	35	35	35	35	35	35	35	35	35	35	35	35	35	35	35	35	35	35	35	35	35	0
				Exposed	35	35	35	35	35	35	35	35	35	35	35	35	35	35	35	35	35	35	35	35	35	35	35	35	35	35	35	35	35	35	35	0	35	0	0	0	0	0	0	0	0	0
		4:12	18.4	Non-Exposed	0	0	0	0	0	0	0	0	0	0	0	0	0	0	0	0	0	0	0	0	0	0	0	0	0	0	0	0	0	0	0	0	0	0	0	0	0	0	0	0	0	0
				Exposed	0	0	0	0	0	0	0	0	0	0	0	0	0	0	0	0	0	0	0	0	0	0	0	0	0	0	0	0	0	0	0	0	0	0	0	0	0	0	0	0	0	0
		5:12	22.6	Non-Exposed	0	0		0	0		0	0		0	0		0	0		0	0		0	0		0	0		0	0		0	0		0	0		0	0		0	0		0	0	
				Exposed	0	0		0	0		0	0		0	0		0	0		0	0		0	0		0	0		0	0		0	0		0	0		0	0		0	0		0	0	
		6:12	26.6	Non-Exposed	0	0		0	0		0	0		0	0		0	0		0	0		0	0		0	0		0	0		0	0		0	0		0	0		0	0		0	0	
				Exposed	0	0		0	0		0	0		0	0		0	0		0	0		0	0		0	0		0	0		0	0		0	0		0	0		0	0		0	0	
		7:12	30.3	Non-Exposed	0	0	0	0	0	0	0	0	0	0	0	0	0	0	0	0	0	0	0	0	0	0	0	0	0	0	0	0	0	0	0	0	0	0	0	0	0	0	0	0	0	0
				Exposed	0	0	0	0	0	0	0	0	0	0	0	0	0	0	0	0	0	0	0	0	0	0	0	0	0	0	0	0	0	0	0	0	0	0	0	0	0	0	0	0	0	0
		8:12	33.7	Non-Exposed	0	0	0	0	0	0	0	0	0	0	0	0	0	0	0	0	0	0	0	0	0	0	0	0	0	0	0	0	0	0	0	0	0	0	0	0	0	0	0	0	0	0
				Exposed	0	0	0	0	0	0	0	0	0	0	0	0	0	0	0	0	0	0	0	0	0	0	0	0	0	0	0	0	0	0	0	0	0	0	0	0	0	0	0	0	0	0
		9:12	36.9	Non-Exposed	0	0	0	0	0	0	0	0	0	0	0	0	0	0	0	0	0	0	0	0	0	0	0	0	0	0	0	0	0	0	0	0	0	0	0	0	0	0	0	0	0	0
				Exposed	0	0	0	0	0	0	0	0	0	0	0	0	0	0	0	0	0	0	0	0	0	0	0	0	0	0	0	0	0	0	0	0	0	0	0	0	0	0	0	0	0	0
		10:12	39.8	Non-Exposed	0	0	0	0	0	0	0	0	0	0	0	0	0	0	0	0	0	0	0	0	0	0	0	0	0	0	0	0	0	0	0	0	0	0	0	0	0	0	0	0	0	0
				Exposed	0	0	0	0	0	0	0	0	0	0	0	0	0	0	0	0	0	0	0	0	0	0	0	0	0	0	0	0	0	0	0	0	0	0	0	0	0	0	0	0	0	0
		11:12	42.5	Non-Exposed	0	0	0	0	0	0	0	0	0	0	0	0	0	0	0	0	0	0	0	0	0	0	0	0	0	0	0	0	0	0	0	0	0	0	0	0	0	0	0	0	0	0
				Exposed	0	0	0	0	0	0	0	0	0	0	0	0	0	0	0	0	0	0	0	0	0	0	0	0	0	0	0	0	0	0	0	0	0	0	0	0	0	0	0	0	0	0
		12:12	45	Non-Exposed	51	51	51	51	51	51	51	51	51	51	51	51	51	51	51	51	51	51	51	51	51	51	51	50	51	49	46	51	46	42	51	0	0	51	0	0	50	0	0	49	0	0
				Exposed	51	51	51	51	51	51	51	51	51	51	51	51	51	51	51	51	51	51	51	51	51	51	51	50	51	50	46	51	46	42	51	0	0	51	0	0	50	0	0	49	0	0

Tamarack 2.3 Rail – Hip Flush-Mount on 30 Foot Maximum Mean Roof Height – Landscape – Panel Width = 45 Inches or Less

Ground Snow Load	Exposure Category	Roof Pitch	Roof Angle	Wind Speed (mph)	95			100			105			110			115			120			125			130			140			150			160			170			180			190		
				Roof Area	1	2	3	1	2	3	1	2	3	1	2	3	1	2	3	1	2	3	1	2	3	1	2	3	1	2	3	1	2	3	1	2	3	1	2	3	1	2	3	1	2	3
120	B	2:12	9.5	Non-Exposed	35	35	35	35	35	35	35	35	35	35	35	35	35	35	35	35	35	35	35	35	35	35	35	35	35	35	35	35	35	35	35	35	35	35	35	35	35	35	35	35	35	35
				Exposed	35	35	35	35	35	35	35	35	35	35	35	35	35	35	35	35	35	35	35	35	35	35	35	35	35	35	35	35	35	35	35	35	35	35	35	35	35	35	35	35	35	35
		3:12	14.0	Non-Exposed	34	34	34	34	34	34	34	34	34	34	34	34	34	34	34	34	34	34	34	34	34	34	34	34	34	34	34	34	34	34	34	34	34	34	34	34	34	34	34	34	34	34
				Exposed	34	34	34	34	34	34	34	34	34	34	34	34	34	34	34	34	34	34	34	34	34	34	34	34	34	34	34	34	34	34	34	34	34	34	34	34	34	34	34	34	34	34
		4:12	18.4	Non-Exposed	0	0	0	0	0	0	0	0	0	0	0	0	0	0	0	0	0	0	0	0	0	0	0	0	0	0	0	0	0	0	0	0	0	0	0	0	0	0	0	0	0	0
				Exposed	0	0	0	0	0	0	0	0	0	0	0	0	0	0	0	0	0	0	0	0	0	0	0	0	0	0	0	0	0	0	0	0	0	0	0	0	0	0	0	0	0	0
		5:12	22.6	Non-Exposed	0	0		0	0		0	0		0	0		0	0		0	0		0	0		0	0		0	0		0	0		0	0		0	0		0	0		0	0	
				Exposed	0	0		0	0		0	0		0	0		0	0		0	0		0	0		0	0		0	0		0	0		0	0		0	0		0	0		0	0	
		6:12	26.6	Non-Exposed	0	0		0	0		0	0		0	0		0	0		0	0		0	0		0	0		0	0		0	0		0	0		0	0		0	0		0	0	
				Exposed	0	0		0	0		0	0		0	0		0	0		0	0		0	0		0	0		0	0		0	0		0	0		0	0		0	0		0	0	
		7:12	30.3	Non-Exposed	0	0	0	0	0	0	0	0	0	0	0	0	0	0	0	0	0	0	0	0	0	0	0	0	0	0	0	0	0	0	0	0	0	0	0	0	0	0	0	0	0	0
				Exposed	0	0	0	0	0	0	0	0	0	0	0	0	0	0	0	0	0	0	0	0	0	0	0	0	0	0	0	0	0	0	0	0	0	0	0	0	0	0	0	0	0	0
		8:12	33.7	Non-Exposed	0	0	0	0	0	0	0	0	0	0	0	0	0	0	0	0	0	0	0	0	0	0	0	0	0	0	0	0	0	0	0	0	0	0	0	0	0	0	0	0	0	0
				Exposed	0	0	0	0	0	0	0	0	0	0	0	0	0	0	0	0	0	0	0	0	0	0	0	0	0	0	0	0	0	0	0	0	0	0	0	0	0	0	0	0	0	0
		9:12	36.9	Non-Exposed	0	0	0	0	0	0	0	0	0	0	0	0	0	0	0	0	0	0	0	0	0	0	0	0	0	0	0	0	0	0	0	0	0	0	0	0	0	0	0	0	0	0
				Exposed	0	0	0	0	0	0	0	0	0	0	0	0	0	0	0	0	0	0	0	0	0	0	0	0	0	0	0	0	0	0	0	0	0	0	0	0	0	0	0	0	0	0
		10:12	39.8	Non-Exposed	0	0	0	0	0	0	0	0	0	0	0	0	0	0	0	0	0	0	0	0	0	0	0	0	0	0	0	0	0	0	0	0	0	0	0	0	0	0	0	0	0	0
				Exposed	0	0	0	0	0	0	0	0	0	0	0	0	0	0	0	0	0	0	0	0	0	0	0	0	0	0	0	0	0	0	0	0	0	0	0	0	0	0	0	0	0	0
		11:12	42.5	Non-Exposed	0	0	0	0	0	0	0	0	0	0	0	0	0	0	0	0	0	0	0	0	0	0	0	0	0	0	0	0	0	0	0	0	0	0	0	0	0	0	0	0	0	0
				Exposed	0	0	0	0	0	0	0	0	0	0	0	0	0	0	0	0	0	0	0	0	0	0	0	0	0	0	0	0	0	0	0	0	0	0	0	0	0	0	0	0	0	0
		12:12	45	Non-Exposed	0	0	0	0	0	0	0	0	0	0	0	0	0	0	0	0	0	0	0	0	0	0	0	0	0	0	0	0	0	0	0	0	0	0	0	0	0	0	0	0	0	0
				Exposed	0	0	0	0	0	0	0	0	0	0	0	0	0	0	0	0	0	0	0	0	0	0	0	0	0	0	0	0	0	0	0	0	0	0	0	0	0	0	0	0	0	0
	C	2:12	9.5	Non-Exposed	35	35	35	35	35	35	35	35	35	35	35	35	35	35	35	35	35	35	35	35	35	35	35	35	35	35	35	35	35	35	35	35	35	35	35	35	35	35	35	35	35	35
				Exposed	35	35	35	35	35	35	35	35	35	35	35	35	35	35	35	35	35	35	35	35	35	35	35	35	35	35	35	35	35	35	35	35	35	35	0	35	0	0	35	0	0	35
		3:12	14.0	Non-Exposed	34	34	34	34	34	34	34	34	34	34	34	34	34	34	34	34	34	34	34	34	34	34	34	34	34	34	34	34	34	34	34	34	34	34	34	34	34	34	34	34	34	34
				Exposed	34	34	34	34	34	34	34	34	34	34	34	34	34	34	34	34	34	34	34	34	34	34	34	34	34	34	34	34	34	34	34	34	34	34	0	34	0	0	34	0	0	34
		4:12	18.4	Non-Exposed	0	0	0	0	0	0	0	0	0	0	0	0	0	0	0	0	0	0	0	0	0	0	0	0	0	0	0	0	0	0	0	0	0	0	0	0	0	0	0	0	0	0
				Exposed	0	0	0	0	0	0	0	0	0	0	0	0	0	0	0	0	0	0	0	0	0	0	0	0	0	0	0	0	0	0	0	0	0	0	0	0	0	0	0	0	0	0
		5:12	22.6	Non-Exposed	0	0		0	0		0	0		0	0		0	0		0	0		0	0		0	0		0	0		0	0		0	0		0	0		0	0		0	0	
				Exposed	0	0		0	0		0	0		0	0		0	0		0	0		0	0		0	0		0	0		0	0		0	0		0	0		0	0		0	0	
		6:12	26.6	Non-Exposed	0	0		0	0		0	0		0	0		0	0		0	0		0	0		0	0		0	0		0	0		0	0		0	0		0	0		0	0	
				Exposed	0	0		0	0		0	0		0	0		0	0		0	0		0	0		0	0		0	0		0	0		0	0		0	0		0	0		0	0	
		7:12	30.3	Non-Exposed	0	0	0	0	0	0	0	0	0	0	0	0	0	0	0	0	0	0	0	0	0	0	0	0	0	0	0	0	0	0	0	0	0	0	0	0	0	0	0	0	0	0
				Exposed	0	0	0	0	0	0	0	0	0	0	0	0	0	0	0	0	0	0	0	0	0	0	0	0	0	0	0	0	0	0	0	0	0	0	0	0	0	0	0	0	0	0
		8:12	33.7	Non-Exposed	0	0	0	0	0	0	0	0	0	0	0	0	0	0	0	0	0	0	0	0	0	0	0	0	0	0	0	0	0	0	0	0	0	0	0	0	0	0	0	0	0	0
				Exposed	0	0	0	0	0	0	0	0	0	0	0	0	0	0	0	0	0	0	0	0	0	0	0	0	0	0	0	0	0	0	0	0	0	0	0	0	0	0	0	0	0	0
		9:12	36.9	Non-Exposed	0	0	0	0	0	0	0	0	0	0	0	0	0	0	0	0	0	0	0	0	0	0	0	0	0	0	0	0	0	0	0	0	0	0	0	0	0	0	0	0	0	0
				Exposed	0	0	0	0	0	0	0	0	0	0	0	0	0	0	0	0	0	0	0	0	0	0	0	0	0	0	0	0	0	0	0	0	0	0	0	0	0	0	0	0	0	0
		10:12	39.8	Non-Exposed	0	0	0	0	0	0	0	0	0	0	0	0	0	0	0	0	0	0	0	0	0	0	0	0	0	0	0	0	0	0	0	0	0	0	0	0	0	0	0	0	0	0
				Exposed	0	0	0	0	0	0	0	0	0	0	0	0	0	0	0	0	0	0	0	0	0	0	0	0	0	0	0	0	0	0	0	0	0	0	0	0	0	0	0	0	0	0
		11:12	42.5	Non-Exposed	0	0	0	0	0	0	0	0	0	0	0	0	0	0	0	0	0	0	0	0	0	0	0	0	0	0	0	0	0	0	0	0	0	0	0	0	0	0	0	0	0	0
				Exposed	0	0	0	0	0	0	0	0	0	0	0	0	0	0	0	0	0	0	0	0	0	0	0	0	0	0	0	0	0	0	0	0	0	0	0	0	0	0	0	0	0	0
		12:12	45	Non-Exposed	0	0	0	0	0	0	0	0	0	0	0	0	0	0	0	0	0	0	0	0	0	0	0	0	0	0	0	0	0	0	0	0	0	0	0	0	0	0	0	0	0	0
				Exposed	0	0	0	0	0	0	0	0	0	0	0	0	0	0	0	0	0	0	0	0	0	0	0	0	0	0	0	0	0	0	0	0	0	0	0	0	0	0	0	0	0	0
	D	2:12	9.5	Non-Exposed	35	35	35	35	35	35	35	35	35	35	35	35	35	35	35	35	35	35	35	35	35	35	35	35	35	35	35	35	35	35	35	35	35	35	35	35	35	35	35	35	35	0
				Exposed	35	35	35	35	35	35	35	35	35	35	35	35	35	35	35	35	35	35	35	35	35	35	35	35	35	35	35	35	35	35	35	35	0	35	0	0	35	0	0	0	0	0
		3:12	14.0	Non-Exposed	34	34	34	34	34	34	34	34	34	34	34	34	34	34	34	34	34	34	34	34	34	34	34	34	34	34	34	34	34	34	34	34	34	34	34	34	34	34	34	34	34	0
				Exposed	34	34	34	34	34	34	34	34	34	34	34	34	34	34	34	34	34	34	34	34	34	34	34	34	34	34	34	34	34	34	34	34	0	34	0	0	0	0	0	0	0	0
		4:12	18.4	Non-Exposed	0	0	0	0	0	0	0	0	0	0	0	0	0	0	0	0	0	0	0	0	0	0	0	0	0	0	0	0	0	0	0	0	0	0	0	0	0	0	0	0	0	0
				Exposed	0	0	0	0	0	0	0	0	0	0	0	0	0	0	0	0	0	0	0	0	0	0	0	0	0	0	0	0	0	0	0	0	0	0	0	0	0	0	0	0	0	0
		5:12	22.6	Non-Exposed	0	0		0	0		0	0		0	0		0	0		0	0		0	0		0	0		0	0		0	0		0	0		0	0		0	0		0	0	
				Exposed	0	0		0	0		0	0		0	0		0	0		0	0		0	0		0	0		0	0		0	0		0	0		0	0		0	0		0	0	
		6:12	26.6	Non-Exposed	0	0		0	0		0	0		0	0		0	0		0	0		0	0		0	0		0	0		0	0		0	0		0	0		0	0		0	0	
				Exposed	0	0		0	0		0	0		0	0		0	0		0	0		0	0		0	0		0	0		0	0		0	0		0	0		0	0		0	0	
		7:12	30.3	Non-Exposed	0	0	0	0	0	0	0	0	0	0	0	0	0	0	0	0	0	0	0	0	0	0	0	0	0	0	0	0	0	0	0	0	0	0	0	0	0	0	0	0	0	0
				Exposed	0	0	0	0	0	0	0	0	0	0	0	0	0	0	0	0	0	0	0	0	0	0	0	0	0	0	0	0	0	0	0	0	0	0	0	0	0	0	0	0	0	0
		8:12	33.7	Non-Exposed	0	0	0	0	0	0	0	0	0	0	0	0	0	0	0	0	0	0	0	0	0	0	0	0	0	0	0	0	0	0	0	0	0	0	0	0	0	0	0	0	0	0
				Exposed	0	0	0	0	0	0	0	0	0	0	0	0	0	0	0	0	0	0	0	0	0	0	0	0	0	0	0	0	0	0	0	0	0	0	0	0	0	0	0	0	0	0
		9:12	36.9	Non-Exposed	0	0	0	0	0	0	0	0	0	0	0	0	0	0	0	0	0	0	0	0	0	0	0	0	0	0	0	0	0	0	0	0	0	0	0	0	0	0	0	0	0	0
				Exposed	0	0	0	0	0	0	0	0	0	0	0	0	0	0	0	0	0	0	0	0	0	0	0	0	0	0	0	0	0	0	0	0	0	0	0	0	0	0	0	0	0	0
		10:12	39.8	Non-Exposed	0	0	0	0	0	0	0	0	0	0	0	0	0	0	0	0	0	0	0	0	0	0	0	0	0	0	0	0	0	0	0	0	0	0	0	0	0	0	0	0	0	0
				Exposed	0	0	0	0	0	0	0	0	0	0	0	0	0	0	0	0	0	0	0	0	0	0	0	0	0	0	0	0	0	0	0	0	0	0	0	0	0	0	0	0	0	0
		11:12	42.5	Non-Exposed	0	0	0	0	0	0	0	0	0	0	0	0	0	0	0	0	0	0	0	0	0	0	0	0	0	0	0	0	0	0	0	0	0	0	0	0	0	0	0	0	0	0
				Exposed	0	0	0	0	0	0	0	0	0	0	0	0	0	0	0	0	0	0	0	0	0	0	0	0	0	0	0	0	0	0	0	0	0	0	0	0	0	0	0	0	0	0
		12:12	45	Non-Exposed	0	0	0	0	0	0	0	0	0	0	0	0	0	0	0	0	0	0	0	0	0	0	0	0	0	0	0	0	0	0	0	0	0	0	0	0	0	0	0	0	0	0
				Exposed	0	0	0	0	0	0	0	0	0	0	0	0	0	0	0	0	0	0	0	0	0	0	0	0	0	0	0	0	0	0	0	0	0	0	0	0	0	0	0	0	0	0

Tamarack 2.3 Rail – Gable Flush-Mount on 30 Foot Maximum Mean Roof Height – Portrait – Panel Length = 68 Inches or Less

Ground Snow Load	Exposure Category	Roof Pitch	Roof Angle	Wind Speed (mph)	95			100			105			110			115			120			125			130			140			150			160			170			180			190		
				Roof Area	1	2	3	1	2	3	1	2	3	1	2	3	1	2	3	1	2	3	1	2	3	1	2	3	1	2	3	1	2	3	1	2	3	1	2	3	1	2	3	1	2	3
0	B	Flat	0	Non-Exposed	96	96	96	96	96	96	96	96	94	96	96	88	96	96	83	96	96	79	96	91	75	96	86	71	96	78	64	87	72	59	80	66	54	74	61	50	69	57	47	65	54	44
				Exposed	96	96	82	96	93	77	96	87	72	96	82	68	95	78	64	90	74	61	85	70	58	81	67	55	73	61	50	67	56	46	62	52	42	58	48	40	54	45	37	50	42	35
		1:12	4.8	Non-Exposed	96	96	96	96	96	96	96	96	93	96	96	88	96	96	83	96	95	78	96	90	74	96	86	71	95	78	64	87	71	59	80	66	54	74	61	50	69	57	47	64	53	44
				Exposed	96	96	81	96	92	76	96	87	71	96	82	67	94	77	64	89	73	60	84	70	57	80	66	55	73	61	50	67	56	46	62	51	42	57	48	40	54	45	37	50	42	35
		2:12	9.5	Non-Exposed	94	94	94	94	94	94	94	94	89	94	94	84	94	89	79	94	84	74	94	79	70	90	75	67	81	68	60	75	62	55	69	57	51	65	53	47	60	49	44	57	46	41
				Exposed	94	87	77	94	81	72	92	76	68	85	72	64	80	67	60	76	64	57	73	60	54	70	57	51	64	52	46	59	48	43	55	44	40	51	41	37	48	39	35	45	36	33
		3:12	14.0	Non-Exposed	93	93	93	93	93	93	93	93	88	93	93	83	93	88	78	93	83	74	93	79	70	89	75	66	80	68	60	74	62	55	69	57	51	64	53	47	60	49	44	57	46	41
				Exposed	93	87	77	93	81	72	91	76	67	84	71	63	80	67	60	76	63	56	72	60	54	69	57	51	64	52	46	59	48	42	55	44	40	51	41	37	48	38	35	45	36	33
		4:12	18.4	Non-Exposed	92	92	92	92	92	92	92	92	88	92	92	82	92	87	78	92	82	73	92	78	69	88	74	66	80	67	60	74	62	55	69	57	50	64	52	47	60	49	43	56	46	41
				Exposed	92	86	76	92	80	71	90	75	67	83	71	63	79	67	59	76	63	56	72	60	53	69	57	51	63	52	46	59	47	42	55	44	39	51	41	37	48	38	35	45	36	33
		5:12	22.6	Non-Exposed	91	91	91	91	91	91	91	91	91	91	91	91	91	91	89	91	91	84	91	87	80	91	82	76	91	75	69	87	69	63	80	63	58	75	58	53	70	54	49	66	51	46
				Exposed	91	91	88	91	89	82	91	84	77	91	79	72	91	74	68	89	70	64	85	67	61	81	64	58	74	58	53	69	53	48	64	49	44	60	45	41	56	42	38	53	40	36
		6:12	26.6	Non-Exposed	91	91	91	91	91	91	91	91	91	91	91	91	91	91	89	91	91	84	91	86	79	91	82	75	91	74	68	86	68	62	80	63	57	75	58	53	70	54	49	66	51	46
				Exposed	91	91	87	91	88	81	91	83	76	91	78	72	91	74	68	88	70	64	84	66	61	80	63	58	74	58	52	68	53	48	64	49	44	60	45	41	56	42	38	53	40	36
		7:12	30.3	Non-Exposed	90	90	90	90	90	90	90	90	90	90	90	90	90	90	90	90	90	89	90	90	85	90	90	81	90	84	74	86	77	68	79	71	62	73	66	58	67	62	54	63	58	51
				Exposed	90	90	90	90	90	87	90	90	82	90	88	77	90	84	73	88	79	69	83	75	66	79	72	63	72	66	57	66	60	53	60	56	49	56	52	45	52	48	42	48	45	40
		8:12	33.7	Non-Exposed	90	90	90	90	90	90	90	90	90	90	90	90	90	90	90	90	90	89	90	90	84	90	90	80	90	84	73	85	77	67	78	71	62	72	66	58	67	62	54	63	58	50
				Exposed	90	90	90	90	90	87	90	90	81	90	88	77	90	83	73	87	79	69	83	75	66	79	71	63	72	65	57	65	60	53	60	56	49	56	52	45	52	48	42	48	45	40
		9:12	36.9	Non-Exposed	89	89	89	89	89	89	89	89	89	89	89	89	89	89	89	89	89	88	89	89	84	89	89	80	89	83	73	85	77	67	78	71	62	72	66	58	67	61	54	62	57	50
				Exposed	89	89	89	89	89	86	89	89	81	89	87	77	89	83	73	87	78	69	82	75	66	78	71	62	71	65	57	65	60	52	60	55	49	56	51	45	52	48	42	48	45	40
		10:12	39.8	Non-Exposed	89	89	89	89	89	89	89	89	89	89	89	89	89	89	89	89	89	88	89	89	83	89	89	80	89	83	73	84	76	67	78	71	62	72	66	58	67	61	54	62	57	50
				Exposed	89	89	89	89	89	86	89	89	81	89	87	76	89	82	72	86	78	69	82	74	65	78	71	62	71	65	57	65	60	52	60	55	48	55	51	45	52	48	42	48	45	40
		11:12	42.5	Non-Exposed	89	89	89	89	89	89	89	89	89	89	89	89	89	89	89	89	89	87	89	89	83	89	89	79	89	82	73	84	76	67	77	70	62	72	65	57	67	61	54	62	57	50
				Exposed	89	89	89	89	89	85	89	89	80	89	86	76	89	82	72	86	78	68	82	74	65	78	71	62	71	65	57	65	60	52	60	55	48	55	51	45	52	48	42	48	45	40
		12:12	45	Non-Exposed	88	88	88	88	88	88	88	88	88	88	88	88	88	88	88	88	88	87	88	88	83	88	88	79	88	82	72	83	76	67	77	70	62	71	65	57	66	61	53	62	57	50
				Exposed	88	88	88	88	88	85	88	88	80	88	86	76	88	82	72	86	78	68	81	74	65	77	70	62	71	65	57	65	59	52	60	55	48	55	51	45	51	48	42	48	45	39
	C	Flat	0	Non-Exposed	96	96	86	96	96	80	96	91	75	96	86	71	96	81	67	94	77	63	89	73	60	84	69	57	77	63	52	70	58	48	65	54	44	60	50	41	56	47	39	52	44	37
				Exposed	96	80	66	91	75	62	86	70	58	81	66	55	76	63	52	72	60	49	68	57	47	65	54	44	59	49	41	55	45	38	51	42	35	47	39	33	44	37	0	41	35	0
		1:12	4.8	Non-Exposed	96	96	85	96	96	80	96	91	75	96	85	70	96	81	66	93	76	63	88	73	60	84	69	57	76	63	52	70	58	48	65	54	44	60	50	41	56	47	39	52	44	37
				Exposed	96	79	65	91	74	61	85	70	58	80	66	54	76	63	52	72	59	49	68	57	46	65	54	44	59	49	41	54	45	38	50	42	35	47	39	33	44	37	0	41	35	0
		2:12	9.5	Non-Exposed	94	92	81	94	85	76	94	80	71	90	75	66	84	71	63	79	67	59	76	63	56	72	60	53	66	54	48	61	50	44	57	46	41	53	42	39	50	40	36	47	38	34
				Exposed	82	69	62	78	65	58	73	61	54	69	57	51	66	54	48	63	51	46	60	49	43	57	46	41	53	42	38	49	39	36	45	37	33	42	34	0	40	0	0	38	0	0
		3:12	14.0	Non-Exposed	93	91	81	93	85	75	93	79	70	89	74	66	83	70	62	79	66	59	75	63	56	72	60	53	66	54	48	61	50	44	57	46	41	53	42	38	50	40	36	47	38	34
				Exposed	82	69	61	77	65	57	73	61	54	69	57	51	66	54	48	63	51	45	60	48	43	57	46	41	53	42	38	49	39	36	45	37	33	42	34	0	40	0	0	38	0	0
		4:12	18.4	Non-Exposed	92	90	80	92	84	75	92	79	70	88	74	66	82	70	62	79	66	59	75	63	56	72	59	53	66	54	48	61	50	44	57	46	41	53	42	38	50	40	36	47	38	34
				Exposed	81	69	61	77	64	57	73	60	54	69	57	51	65	54	48	62	51	45	60	48	43	57	46	41	52	42	38	49	39	36	45	36	33	42	34	0	40	0	0	38	0	0
		5:12	22.6	Non-Exposed	91	91	91	91	91	86	91	87	80	91	82	76	91	78	71	91	73	67	88	70	64	84	66	61	77	60	55	71	55	50	66	51	46	62	47	43	58	44	40	55	41	38
				Exposed	91	76	70	91	72	65	85	67	61	81	63	58	77	60	54	73	57	52	70	54	49	67	51	46	61	47	42	57	43	39	53	40	36	49	38	34	46	35	32	44	34	0
		6:12	26.6	Non-Exposed	91	91	91	91	91	85	91	87	80	91	82	75	91	77	71	91	73	67	88	69	63	83	66	60	77	60	55	71	55	50	66	51	46	62	47	43	58	44	40	55	41	37
				Exposed	91	76	70	90	71	65	85	67	61	80	63	58	76	60	54	73	57	51	69	54	49	66	51	46	61	47	42	57	43	39	53	40	36	49	38	34	46	35	0	44	34	0
		7:12	30.3	Non-Exposed	90	90	90	90	90	90	90	90	85	90	90	81	90	87	76	90	83	72	87	79	69	83	75	66	75	68	60	69	63	55	63	58	51	58	54	47	54	50	44	51	47	41
				Exposed	90	86	75	90	81	71	84	76	66	79	72	63	75	68	59	71	64	56	67	61	54	64	58	51	58	53	47	53	49	43	49	45	40	45	42	37	42	40	35	40	38	33
		8:12	33.7	Non-Exposed	90	90	90	90	90	90	90	90	85	90	90	80	90	87	76	90	82	72	87	78	69	82	74	65	75	68	60	68	63	55	63	58	51	58	54	47	54	50	44	50	47	41
				Exposed	90	85	75	89	80	70	84	75	66	79	71	62	74	68	59	70	64	56	67	61	53	63	58	51	58	53	47	53	49	43	49	45	40	45	42	37	42	40	35	40	37	33
		9:12	36.9	Non-Exposed	89	89	89	89	89	89	89	89	84	89	89	80	89	86	76	89	82	72	86	78	68	82	74	65	74	68	59	68	62	55	63	58	51	58	54	47	54	50	44	50	47	41
				Exposed	89	85	74	88	80	70	83	75	66	78	71	62	74	67	59	70	64	56	66	61	53	63	58	51	57	53	46	53	49	43	48	45	40	45	42	37	42	40	35	39	37	33
		10:12	39.8	Non-Exposed	89	89	89	89	89	89	89	89	84	89	89	79	89	86	75	89	81	71	86	77	68	81	74	65	74	68	59	68	62	55	63	58	50	58	53	47	54	50	44	50	47	41
				Exposed	89	84	74	88	79	70	83	75	66	78	71	62	74	67	59	70	64	56	66	61	53	63	58	51	57	53	46	52	49	43	48	45	40	45	42	37	42	40	35	39	37	33
		11:12	42.5	Non-Exposed	89	89	89	89	89	89	89	89	84	89	89	79	89	85	75	89	81	71	85	77	68	81	74	65	74	67	59	68	62	54	62	57	50	58	53	47	54	50	44	50	47	41
				Exposed	89	84	74	87	79	70	82	75	66	78	71	62	73	67	59	69	64	56	66	61	53	63	58	51	57	53	46	52	49	43	48	45	40	45	42	37	42	39	35	39	37	33
		12:12	45	Non-Exposed	88	88	88	88	88	88	88	88	83	88	88	79	88	85	75	88	81	71	85	77	68	81	73	65	74	67	59	67	62	54	62	57	50	58	53	47	54	50	44	50	47	41
				Exposed	88	84	74	87	79	69	82	74	65	77	70	62	73	67	59	69	63	56	66	60	53	63	58	51	57	53	46	52	49	43	48	45	40	45	42	37	42	39	35	39	37	33
	D	Flat	0	Non-Exposed	96	93	77	96	87	72	96	82	67	94	77	63	89	73	60	84	69	57	80	66	54	76	63	51	69	57	47	63	52	43	58	49	40	54	45	38	51	42	35	47	40	34
				Exposed	87	72	59	82	67	55	77	63	52	72	60	49	68	57	47	65	54	44	62	51	42	59	49	40	54	45	37	49	41	35	46	39	33	42	36	0	40	34	0	38	0	0
		1:12	4.8	Non-Exposed	96	92	76	96	87	71	96	81	67	93	77	63	88	73	60	83	69	57	79	65	54	75	62	51	69	57	47	63	52	43	58	48	40	54	45	38	50	42	35	47	40	34
				Exposed	87	71	59	81	67	55	76	63	52	72	60	49	68	56	46	65	54	44	61	51	42	59	49	40	53	45	37	49	41	35	46	38	32	42	36	0	40	34	0	38	0	0
		2:12	9.5	Non-Exposed	94	81	72	92	76	67	84	71	63	80	67	59	76	63	56	72	60	53	69	57	50	66	54	48	60	49	44	56	45	40	52	41	38	48	39	35	45	37	33	43	35	0
				Exposed	75	62	55	70	58	52	67	55	49	63	51	46	60	48	43	57	46	41	54	44	39	52	42	38	48	38	35	44	36	33	41	34	0	39	0	0	37	0	0	35	0	0
		3:12	14.0	Non-Exposed	93	81	72	91	75	67	84	71	63	79	67	59	75	63	56	72	59	53	68	56	50	65	54	48	60	49	43	56	45	40	52	41	38	48	39	35	45	37	33	43	35	0
				Exposed	74	62	55	70	58	52	66	54	48	63	51	46	60	48	43	57	46	41	54	44	39	52	41	38	48	38	35	44	36	33	41	34	0	39	0	0	37	0	0	35	0	0
		4:12	18.4	Non-Exposed	92	80	71	90	75	67	83	70	63	79	66	59	75	63	56	71	59	53	68	56	50	65	53	48	60	49	43	55	45	40	52	41	38	48	39	35	45	37	33	43	35	0
				Exposed	74	62	55	70	58	51	66	54	48	63	51	46	60	48	43	57	46	41	54	43	39	52	41	38	48	38	35	44	36	33	41	33	0	39	0	0	37	0	0	35	0	0
		5:12	22.6	Non-Exposed	91	89	82	91	83	77	91	78	72	91	74	67	88	70	64	84	66	60	80	63	57	76	60	54	70	54	49	65	50	45	60	46	42	56	43	39	53	40	36	50	38	34
				Exposed	87	69	63	82	64	59	77	60	55	73	57	52	70	54	49	66	51	46	63	49	44	61	46	42	56	42	38	52	39	35	48	37	33	45	35	0	42	33	0	40	0	0
		6:12	26.6	Non-Exposed	91	88	82	91	83	76	91	78	71	91	73	67	87	69	63	83	66	60	79	62	57	76	59	54	70	54	49	65	50	45	60	46	41	56	43	39	53	40	36	50	38	34
				Exposed	86	68	62	81	64	58	77	60	55	73	57	52	69	54	49	66	51	46	63	48	44	61	46	42	56	42	38	52	39	35	48	37	33	45	34	0	42	0	0	40	0	0
		7:12	30.3	Non-Exposed	90	90	87	90	90	82	90	88	77	90	83	73	87	78	69	82	74	65	78	71	62	74	67	59	67	62	54	62	57	50	57	52	46	52	49	43	49	45	40	45	42	38
				Exposed	86	77	68	80	73	64	75	68	60	71	65	57	67	61	54	63	58	51	60	55	48	57	53	46	52	48	42	47	44	39	44	41	36	41	39	34	38	36	0	36	34	0
		8:12	33.7	Non-Exposed	90	90	87	90	90	81	90	87	77	90	82	72	87	78	68	82	74	65	78	71	62	74	67	59	67	61	54	61	56	49	56	52	46	52	49	42	49	45	40	45	42	37
				Exposed	85	77	67	80	72	63	75	68	60	70	64	56	67	61	53	63	58	51	60	55	48	57	53	46	52	48	42	47	44	39	44	41	36	41	39	34	38	36	0	36	34	0
		9:12	36.9	Non-Exposed	89	89	86	89	89	81	89	87	76	89	82	72	86	78	68	81	74	65	77	70	62	73	67	59	67	61	54	61	56	49	56	52	46	52	48	42	48	45	40	45	42	37
				Exposed	85	77	67	79	72	63	75	68	60	70	64	56	66	61	53	63	58	51	60	55	48	57	52	46	52	48	42	47	44	39	44	41	36	41	38	34	38	36	0	36	34	0
		10:12	39.8	Non-Exposed	89	89	86	89	89	80	89	86	76	89	82	72	86	77	68	81	74	65	77	70	61	73	67	59	67	61	54	61	56	49	56	52	46	52	48	42	48	45	40	45	42	37
				Exposed	84	76	67	79	72	63	74	68	59	70	64	56	66	61	53	63	58	50	59	55	48	57	52	46	51	48	42	47	44	39	43	41	36	41	38	34	38	36	0	36	34	0
		11:12	42.5	Non-Exposed	89	89	85	89	89	80	89	86	76	89	81	71	85	77	68	81	73	64	77	70	61	73	67	58	66	61	53	61	56	49	56	52	45	52	48	42	48	45	40	45	42	37
				Exposed	84	76	67	79	71	63	74	67	59	70	64	56	66	60	53	62	57	50	59	55	48	56	52	46	51	48	42	47	44	39	43	41	36	41	38	34	38	36	0	36	34	0
		12:12	45	Non-Exposed	88	88	85	88	88	80	88	85	75	88	81	71	85	77	68	80	73	64	76	70	61	73	66	58	66	61	53	61	56	49	56	52	45	52	48	42	48	45	40	45	42	37
				Exposed	84	76	67	78	71	63	74	67	59	69	64	56	66	60	53	62	57	50	59	55	48	56	52	46	51	48	42	47	44	39	43	41	36	40	38	34	38	36	0	36	34	0

Tamarack 2.3 Rail – Gable Flush-Mount on 30 Foot Maximum Mean Roof Height – Portrait – Panel Length = 68 Inches or Less

Ground Snow Load	Exposure Category	Roof Pitch	Roof Angle	Wind Speed (mph)	95			100			105			110			115			120			125			130			140			150			160			170			180			190		
				Roof Area	1	2	3	1	2	3	1	2	3	1	2	3	1	2	3	1	2	3	1	2	3	1	2	3	1	2	3	1	2	3	1	2	3	1	2	3	1	2	3	1	2	3
5	B	Flat	0	Non-Exposed	92	92	92	92	92	92	92	92	92	92	92	88	92	92	83	92	92	79	92	91	75	92	86	71	92	78	64	87	72	59	80	66	54	74	61	50	69	57	47	65	54	44
				Exposed	92	92	82	92	92	77	92	87	72	92	82	68	92	78	64	90	74	61	85	70	58	81	67	55	73	61	50	67	56	46	62	52	42	58	48	40	54	45	37	50	42	35
		1:12	4.8	Non-Exposed	89	89	89	89	89	89	89	89	89	89	89	88	89	89	83	89	89	78	89	89	74	89	86	71	89	78	64	87	71	59	80	66	54	74	61	50	69	57	47	64	53	44
				Exposed	89	89	81	89	89	76	89	87	71	89	82	67	89	77	64	89	73	60	84	70	57	80	66	55	73	61	50	67	56	46	62	51	42	57	48	40	54	45	37	50	42	35
		2:12	9.5	Non-Exposed	87	87	87	87	87	87	87	87	87	87	87	84	87	87	79	87	84	74	87	79	70	87	75	67	81	68	60	75	62	55	69	57	51	65	53	47	60	49	44	57	46	41
				Exposed	87	87	77	87	81	72	87	76	68	85	72	64	80	67	60	76	64	57	73	60	54	70	57	51	64	52	46	59	48	43	55	44	40	51	41	37	48	39	35	45	36	33
		3:12	14.0	Non-Exposed	85	85	85	85	85	85	85	85	85	85	85	83	85	85	78	85	83	74	85	79	70	85	75	66	80	68	60	74	62	55	69	57	51	64	53	47	60	49	44	57	46	41
				Exposed	85	85	77	85	81	72	85	76	67	84	71	63	80	67	60	76	63	56	72	60	54	69	57	51	64	52	46	59	48	42	55	44	40	51	41	37	48	38	35	45	36	33
		4:12	18.4	Non-Exposed	86	86	86	86	86	86	86	86	86	86	86	82	86	86	78	86	82	73	86	78	69	86	74	66	80	67	60	74	62	55	69	57	50	64	52	47	60	49	43	56	46	41
				Exposed	86	86	76	86	80	71	86	75	67	83	71	63	79	67	59	76	63	56	72	60	53	69	57	51	63	52	46	59	47	42	55	44	39	51	41	37	48	38	35	45	36	33
		5:12	22.6	Non-Exposed	86	86	86	86	86	86	86	86	86	86	86	86	86	86	86	86	86	84	86	86	80	86	82	76	86	75	69	86	69	63	80	63	58	75	58	53	70	54	49	66	51	46
				Exposed	86	86	86	86	86	82	86	84	77	86	79	72	86	74	68	86	70	64	85	67	61	81	64	58	74	58	53	69	53	48	64	49	44	60	45	41	56	42	38	53	40	36
		6:12	26.6	Non-Exposed	86	86	86	86	86	86	86	86	86	86	86	86	86	86	86	86	86	84	86	86	79	86	82	75	86	74	68	86	68	62	80	63	57	75	58	53	70	54	49	66	51	46
				Exposed	86	86	86	86	86	81	86	83	76	86	78	72	86	74	68	86	70	64	84	66	61	80	63	58	74	58	52	68	53	48	64	49	44	60	45	41	56	42	38	53	40	36
		7:12	30.3	Non-Exposed	87	87	87	87	87	87	87	87	87	87	87	87	87	87	87	87	87	87	87	87	85	87	87	81	87	84	74	86	77	68	79	71	62	73	66	58	67	62	54	63	58	51
				Exposed	87	87	87	87	87	87	87	87	82	87	87	77	87	84	73	87	79	69	83	75	66	79	72	63	72	66	57	66	60	53	60	56	49	56	52	45	52	48	42	48	45	40
		8:12	33.7	Non-Exposed	87	87	87	87	87	87	87	87	87	87	87	87	87	87	87	87	87	87	87	87	84	87	87	80	87	84	73	85	77	67	78	71	62	72	66	58	67	62	54	63	58	50
				Exposed	87	87	87	87	87	87	87	87	81	87	87	77	87	83	73	87	79	69	83	75	66	79	71	63	72	65	57	65	60	53	60	56	49	56	52	45	52	48	42	48	45	40
		9:12	36.9	Non-Exposed	88	88	88	88	88	88	88	88	88	88	88	88	88	88	88	88	88	88	88	88	84	88	88	80	88	83	73	85	77	67	78	71	62	72	66	58	67	61	54	62	57	50
				Exposed	88	88	88	88	88	86	88	88	81	88	87	77	88	83	73	87	78	69	82	75	66	78	71	62	71	65	57	65	60	52	60	55	49	56	51	45	52	48	42	48	45	40
		10:12	39.8	Non-Exposed	88	88	88	88	88	88	88	88	88	88	88	88	88	88	88	88	88	88	88	88	83	88	88	80	88	83	73	84	76	67	78	71	62	72	66	58	67	61	54	62	57	50
				Exposed	88	88	88	88	88	86	88	88	81	88	87	76	88	82	72	86	78	69	82	74	65	78	71	62	71	65	57	65	60	52	60	55	48	55	51	45	52	48	42	48	45	40
		11:12	42.5	Non-Exposed	89	89	89	89	89	89	89	89	89	89	89	89	89	89	89	89	89	87	89	89	83	89	89	79	89	82	73	84	76	67	77	70	62	72	65	57	67	61	54	62	57	50
				Exposed	89	89	89	89	89	85	89	89	80	89	86	76	89	82	72	86	78	68	82	74	65	78	71	62	71	65	57	65	60	52	60	55	48	55	51	45	52	48	42	48	45	40
		12:12	45	Non-Exposed	88	88	88	88	88	88	88	88	88	88	88	88	88	88	88	88	88	87	88	88	83	88	88	79	88	82	72	83	76	67	77	70	62	71	65	57	66	61	53	62	57	50
				Exposed	88	88	88	88	88	85	88	88	80	88	86	76	88	82	72	86	78	68	81	74	65	77	70	62	71	65	57	65	59	52	60	55	48	55	51	45	51	48	42	48	45	39
	C	Flat	0	Non-Exposed	92	92	86	92	92	80	92	91	75	92	86	71	92	81	67	92	77	63	89	73	60	84	69	57	77	63	52	70	58	48	65	54	44	60	50	41	56	47	39	52	44	37
				Exposed	92	80	66	91	75	62	86	70	58	81	66	55	76	63	52	72	60	49	68	57	47	65	54	44	59	49	41	55	45	38	51	42	35	47	39	33	44	37	0	41	35	0
		1:12	4.8	Non-Exposed	89	89	85	89	89	80	89	89	75	89	85	70	89	81	66	89	76	63	88	73	60	84	69	57	76	63	52	70	58	48	65	54	44	60	50	41	56	47	39	52	44	37
				Exposed	89	79	65	89	74	61	85	70	58	80	66	54	76	63	52	72	59	49	68	57	46	65	54	44	59	49	41	54	45	38	50	42	35	47	39	33	44	37	0	41	35	0
		2:12	9.5	Non-Exposed	87	87	81	87	85	76	87	80	71	87	75	66	84	71	63	79	67	59	76	63	56	72	60	53	66	54	48	61	50	44	57	46	41	53	42	39	50	40	36	47	38	34
				Exposed	82	69	62	78	65	58	73	61	54	69	57	51	66	54	48	63	51	46	60	49	43	57	46	41	53	42	38	49	39	36	45	37	33	42	34	0	40	0	0	38	0	0
		3:12	14.0	Non-Exposed	85	85	81	85	85	75	85	79	70	85	74	66	83	70	62	79	66	59	75	63	56	72	60	53	66	54	48	61	50	44	57	46	41	53	42	38	50	40	36	47	38	34
				Exposed	82	69	61	77	65	57	73	61	54	69	57	51	66	54	48	63	51	45	60	48	43	57	46	41	53	42	38	49	39	36	45	37	33	42	34	0	40	0	0	38	0	0
		4:12	18.4	Non-Exposed	86	86	80	86	84	75	86	79	70	86	74	66	82	70	62	79	66	59	75	63	56	72	59	53	66	54	48	61	50	44	57	46	41	53	42	38	50	40	36	47	38	34
				Exposed	81	69	61	77	64	57	73	60	54	69	57	51	65	54	48	62	51	45	60	48	43	57	46	41	52	42	38	49	39	36	45	36	33	42	34	0	40	0	0	38	0	0
		5:12	22.6	Non-Exposed	86	86	86	86	86	86	86	86	80	86	82	76	86	78	71	86	73	67	86	70	64	84	66	61	77	60	55	71	55	50	66	51	46	62	47	43	58	44	40	55	41	38
				Exposed	86	76	70	86	72	65	85	67	61	81	63	58	77	60	54	73	57	52	70	54	49	67	51	46	61	47	42	57	43	39	53	40	36	49	38	34	46	35	32	44	34	0
		6:12	26.6	Non-Exposed	86	86	86	86	86	85	86	86	80	86	82	75	86	77	71	86	73	67	86	69	63	83	66	60	77	60	55	71	55	50	66	51	46	62	47	43	58	44	40	55	41	37
				Exposed	86	76	70	86	71	65	85	67	61	80	63	58	76	60	54	73	57	51	69	54	49	66	51	46	61	47	42	57	43	39	53	40	36	49	38	34	46	35	0	44	34	0
		7:12	30.3	Non-Exposed	87	87	87	87	87	87	87	87	85	87	87	81	87	87	76	87	83	72	87	79	69	83	75	66	75	68	60	69	63	55	63	58	51	58	54	47	54	50	44	51	47	41
				Exposed	87	86	75	87	81	71	84	76	66	79	72	63	75	68	59	71	64	56	67	61	54	64	58	51	58	53	47	53	49	43	49	45	40	45	42	37	42	40	35	40	38	33
		8:12	33.7	Non-Exposed	87	87	87	87	87	87	87	87	85	87	87	80	87	87	76	87	82	72	87	78	69	82	74	65	75	68	60	68	63	55	63	58	51	58	54	47	54	50	44	50	47	41
				Exposed	87	85	75	87	80	70	84	75	66	79	71	62	74	68	59	70	64	56	67	61	53	63	58	51	58	53	47	53	49	43	49	45	40	45	42	37	42	40	35	40	37	33
		9:12	36.9	Non-Exposed	88	88	88	88	88	88	88	88	84	88	88	80	88	86	76	88	82	72	86	78	68	82	74	65	74	68	59	68	62	55	63	58	51	58	54	47	54	50	44	50	47	41
				Exposed	88	85	74	88	80	70	83	75	66	78	71	62	74	67	59	70	64	56	66	61	53	63	58	51	57	53	46	53	49	43	48	45	40	45	42	37	42	40	35	39	37	33
		10:12	39.8	Non-Exposed	88	88	88	88	88	88	88	88	84	88	88	79	88	86	75	88	81	71	86	77	68	81	74	65	74	68	59	68	62	55	63	58	50	58	53	47	54	50	44	50	47	41
				Exposed	88	84	74	88	79	70	83	75	66	78	71	62	74	67	59	70	64	56	66	61	53	63	58	51	57	53	46	52	49	43	48	45	40	45	42	37	42	40	35	39	37	33
		11:12	42.5	Non-Exposed	89	89	89	89	89	89	89	89	84	89	89	79	89	85	75	89	81	71	85	77	68	81	74	65	74	67	59	68	62	54	62	57	50	58	53	47	54	50	44	50	47	41
				Exposed	89	84	74	87	79	70	82	75	66	78	71	62	73	67	59	69	64	56	66	61	53	63	58	51	57	53	46	52	49	43	48	45	40	45	42	37	42	39	35	39	37	33
		12:12	45	Non-Exposed	88	88	88	88	88	88	88	88	83	88	88	79	88	85	75	88	81	71	85	77	68	81	73	65	74	67	59	67	62	54	62	57	50	58	53	47	54	50	44	50	47	41
				Exposed	88	84	74	87	79	69	82	74	65	77	70	62	73	67	59	69	63	56	66	60	53	63	58	51	57	53	46	52	49	43	48	45	40	45	42	37	42	39	35	39	37	33
	D	Flat	0	Non-Exposed	92	92	77	92	87	72	92	82	67	92	77	63	89	73	60	84	69	57	80	66	54	76	63	51	69	57	47	63	52	43	58	49	40	54	45	38	51	42	35	47	40	34
				Exposed	87	72	59	82	67	55	77	63	52	72	60	49	68	57	47	65	54	44	62	51	42	59	49	40	54	45	37	49	41	35	46	39	33	42	36	0	40	34	0	38	0	0
		1:12	4.8	Non-Exposed	89	89	76	89	87	71	89	81	67	89	77	63	88	73	60	83	69	57	79	65	54	75	62	51	69	57	47	63	52	43	58	48	40	54	45	38	50	42	35	47	40	34
				Exposed	87	71	59	81	67	55	76	63	52	72	60	49	68	56	46	65	54	44	61	51	42	59	49	40	53	45	37	49	41	35	46	38	32	42	36	0	40	34	0	38	0	0
		2:12	9.5	Non-Exposed	87	81	72	87	76	67	84	71	63	80	67	59	76	63	56	72	60	53	69	57	50	66	54	48	60	49	44	56	45	40	52	41	38	48	39	35	45	37	33	43	35	0
				Exposed	75	62	55	70	58	52	67	55	49	63	51	46	60	48	43	57	46	41	54	44	39	52	42	38	48	38	35	44	36	33	41	34	0	39	0	0	37	0	0	35	0	0
		3:12	14.0	Non-Exposed	85	81	72	85	75	67	84	71	63	79	67	59	75	63	56	72	59	53	68	56	50	65	54	48	60	49	43	56	45	40	52	41	38	48	39	35	45	37	33	43	35	0
				Exposed	74	62	55	70	58	52	66	54	48	63	51	46	60	48	43	57	46	41	54	44	39	52	41	38	48	38	35	44	36	33	41	34	0	39	0	0	37	0	0	35	0	0
		4:12	18.4	Non-Exposed	86	80	71	86	75	67	83	70	63	79	66	59	75	63	56	71	59	53	68	56	50	65	53	48	60	49	43	55	45	40	52	41	38	48	39	35	45	37	33	43	35	0
				Exposed	74	62	55	70	58	51	66	54	48	63	51	46	60	48	43	57	46	41	54	43	39	52	41	38	48	38	35	44	36	33	41	33	0	39	0	0	37	0	0	35	0	0
		5:12	22.6	Non-Exposed	86	86	82	86	83	77	86	78	72	86	74	67	86	70	64	84	66	60	80	63	57	76	60	54	70	54	49	65	50	45	60	46	42	56	43	39	53	40	36	50	38	34
				Exposed	86	69	63	82	64	59	77	60	55	73	57	52	70	54	49	66	51	46	63	49	44	61	46	42	56	42	38	52	39	35	48	37	33	45	35	0	42	33	0	40	0	0
		6:12	26.6	Non-Exposed	86	86	82	86	83	76	86	78	71	86	73	67	86	69	63	83	66	60	79	62	57	76	59	54	70	54	49	65	50	45	60	46	41	56	43	39	53	40	36	50	38	34
				Exposed	86	68	62	81	64	58	77	60	55	73	57	52	69	54	49	66	51	46	63	48	44	61	46	42	56	42	38	52	39	35	48	37	33	45	34	0	42	0	0	40	0	0
		7:12	30.3	Non-Exposed	87	87	87	87	87	82	87	87	77	87	83	73	87	78	69	82	74	65	78	71	62	74	67	59	67	62	54	62	57	50	57	52	46	52	49	43	49	45	40	45	42	38
				Exposed	86	77	68	80	73	64	75	68	60	71	65	57	67	61	54	63	58	51	60	55	48	57	53	46	52	48	42	47	44	39	44	41	36	41	39	34	38	36	0	36	34	0
		8:12	33.7	Non-Exposed	87	87	87	87	87	81	87	87	77	87	82	72	87	78	68	82	74	65	78	71	62	74	67	59	67	61	54	61	56	49	56	52	46	52	49	42	49	45	40	45	42	37
				Exposed	85	77	67	80	72	63	75	68	60	70	64	56	67	61	53	63	58	51	60	55	48	57	53	46	52	48	42	47	44	39	44	41	36	41	39	34	38	36	0	36	34	0
		9:12	36.9	Non-Exposed	88	88	86	88	88	81	88	87	76	88	82	72	86	78	68	81	74	65	77	70	62	73	67	59	67	61	54	61	56	49	56	52	46	52	48	42	49	45	40	45	42	37
				Exposed	85	77	67	79	72	63	75	68	60	70	64	56	66	61	53	63	58	51	60	55	48	57	52	46	52	48	42	47	44	39	44	41	36	41	38	34	38	36	0	36	34	0
		10:12	39.8	Non-Exposed	88	88	86	88	88	80	88	86	76	88	82	72	86	77	68	81	74	65	77	70	61	73	67	59	67	61	54	61	56	49	56	52	46	52	48	42	48	45	40	45	42	37
				Exposed	84	76	67	79	72	63	74	68	59	70	64	56	66	61	53	63	58	50	59	55	48	57	52	46	51	48	42	47	44	39	43	41	36	41	38	34	38	36	0	36	34	0
		11:12	42.5	Non-Exposed	89	89	85	89	89	80	89	86	76	89	81	71	85	77	68	81	73	64	77	70	61	73	67	58	66	61	53	61	56	49	56	52	45	52	48	42	48	45	40	45	42	37
				Exposed	84	76	67	79	71	63	74	67	59	70	64	56	66	60	53	62	57	50	59	55	48	56	52	46	51	48	42	47	44	39	43	41	36	41	38	34	38	36	0	36	34	0
		12:12	45	Non-Exposed	88	88	85	88	88	80	88	85	75	88	81	71	85	77	68	80	73	64	76	70	61	73	66	58	66	61	53	61	56	49	56	52	45	52	48	42	48	45	40	45	42	37
				Exposed	84	76	67	78	71	63	74	67	59	69	64	56	66	60	53	62	57	50	59	55	48	56	52	46	51	48	42	47	44	39	43	41	36	40	38	34	38	36	0	36	34	0

Tamarack 2.3 Rail – Gable Flush-Mount on 30 Foot Maximum Mean Roof Height – Portrait – Panel Length = 68 Inches or Less

Ground Snow Load	Exposure Category	Roof Pitch	Roof Angle	Wind Speed (mph)	95			100			105			110			115			120			125			130			140			150			160			170			180			190		
				Roof Area	1	2	3	1	2	3	1	2	3	1	2	3	1	2	3	1	2	3	1	2	3	1	2	3	1	2	3	1	2	3	1	2	3	1	2	3	1	2	3	1	2	3
10	B	Flat	0	Non-Exposed	81	81	81	81	81	81	81	81	81	81	81	81	81	81	81	81	81	79	81	81	75	81	81	71	81	78	64	81	72	59	80	66	54	74	61	50	69	57	47	65	54	44
				Exposed	81	81	81	81	81	77	81	81	72	81	81	68	81	78	64	81	74	61	81	70	58	81	67	55	73	61	50	67	56	46	62	52	42	58	48	40	54	45	37	50	42	35
		1:12	4.8	Non-Exposed	78	78	78	78	78	78	78	78	78	78	78	78	78	78	78	78	78	78	78	78	74	78	78	71	78	78	64	78	71	59	78	66	54	74	61	50	69	57	47	64	53	44
				Exposed	78	78	78	78	78	76	78	78	71	78	78	67	78	77	64	78	73	60	78	70	57	78	66	55	73	61	50	67	56	46	62	51	42	57	48	40	54	45	37	50	42	35
		2:12	9.5	Non-Exposed	76	76	76	76	76	76	76	76	76	76	76	76	76	76	76	76	76	74	76	76	70	76	75	67	76	68	60	75	62	55	69	57	51	65	53	47	60	49	44	57	46	41
				Exposed	76	76	76	76	76	72	76	76	68	76	72	64	76	67	60	76	64	57	73	60	54	70	57	51	64	52	46	59	48	43	55	44	40	51	41	37	48	39	35	45	36	33
		3:12	14.0	Non-Exposed	74	74	74	74	74	74	74	74	74	74	74	74	74	74	74	74	74	74	74	74	70	74	74	66	74	68	60	74	62	55	69	57	51	64	53	47	60	49	44	57	46	41
				Exposed	74	74	74	74	74	72	74	74	67	74	71	63	74	67	60	74	63	56	72	60	54	69	57	51	64	52	46	59	48	42	55	44	40	51	41	37	48	38	35	45	36	33
		4:12	18.4	Non-Exposed	76	76	76	76	76	76	76	76	76	76	76	76	76	76	76	76	76	73	76	76	69	76	74	66	76	67	60	74	62	55	69	57	50	64	52	47	60	49	43	56	46	41
				Exposed	76	76	76	76	76	71	76	75	67	76	71	63	76	67	59	76	63	56	72	60	53	69	57	51	63	52	46	59	47	42	55	44	39	51	41	37	48	38	35	45	36	33
		5:12	22.6	Non-Exposed	77	77	77	77	77	77	77	77	77	77	77	77	77	77	77	77	77	77	77	77	77	77	77	76	77	75	69	77	69	63	77	63	58	75	58	53	70	54	49	66	51	46
				Exposed	77	77	77	77	77	77	77	77	77	77	77	72	77	74	68	77	70	64	77	67	61	77	64	58	74	58	53	69	53	48	64	49	44	60	45	41	56	42	38	53	40	36
		6:12	26.6	Non-Exposed	77	77	77	77	77	77	77	77	77	77	77	77	77	77	77	77	77	77	77	77	77	77	77	75	77	74	68	77	68	62	77	63	57	75	58	53	70	54	49	66	51	46
				Exposed	77	77	77	77	77	77	77	77	76	77	77	72	77	74	68	77	70	64	77	66	61	77	63	58	74	58	52	68	53	48	64	49	44	60	45	41	56	42	38	53	40	36
		7:12	30.3	Non-Exposed	78	78	78	78	78	78	78	78	78	78	78	78	78	78	78	78	78	78	78	78	78	78	78	78	78	78	74	78	77	68	76	71	62	73	66	58	67	62	54	63	58	51
				Exposed	78	78	78	78	78	78	78	78	78	78	78	77	78	78	73	78	78	69	78	75	66	78	72	63	72	66	57	66	60	53	60	56	49	56	52	45	52	48	42	48	45	40
		8:12	33.7	Non-Exposed	79	79	79	79	79	79	79	79	79	79	79	79	79	79	79	79	79	79	79	79	79	79	79	79	79	79	73	79	77	67	77	71	62	72	66	58	67	62	54	63	58	50
				Exposed	79	79	79	79	79	79	79	79	79	79	79	77	79	79	73	79	79	69	79	75	66	79	71	63	72	65	57	65	60	53	60	56	49	56	52	45	52	48	42	48	45	40
		9:12	36.9	Non-Exposed	80	80	80	80	80	80	80	80	80	80	80	80	80	80	80	80	80	80	80	80	80	80	80	80	80	80	73	80	77	67	78	71	62	72	66	58	67	61	54	62	57	50
				Exposed	80	80	80	80	80	80	80	80	80	80	80	77	80	80	73	80	78	69	80	75	66	78	71	62	71	65	57	65	60	52	60	55	49	56	51	45	52	48	42	48	45	40
		10:12	39.8	Non-Exposed	81	81	81	81	81	81	81	81	81	81	81	81	81	81	81	81	81	81	81	81	81	81	81	80	81	81	73	81	76	67	78	71	62	72	66	58	67	61	54	62	57	50
				Exposed	81	81	81	81	81	81	81	81	81	81	81	76	81	81	72	81	78	69	81	74	65	78	71	62	71	65	57	65	60	52	60	55	48	55	51	45	52	48	42	48	45	40
		11:12	42.5	Non-Exposed	82	82	82	82	82	82	82	82	82	82	82	82	82	82	82	82	82	82	82	82	82	82	82	79	82	82	73	82	76	67	77	70	62	72	65	57	67	61	54	62	57	50
				Exposed	82	82	82	82	82	82	82	82	80	82	82	76	82	82	72	82	78	68	82	74	65	78	71	62	71	65	57	65	60	52	60	55	48	55	51	45	52	48	42	48	45	40
		12:12	45	Non-Exposed	84	84	84	84	84	84	84	84	84	84	84	84	84	84	84	84	84	84	84	84	83	84	84	79	84	82	72	83	76	67	77	70	62	71	65	57	66	61	53	62	57	50
				Exposed	84	84	84	84	84	84	84	84	80	84	84	76	84	82	72	84	78	68	81	74	65	77	70	62	71	65	57	65	59	52	60	55	48	55	51	45	51	48	42	48	45	39
	C	Flat	0	Non-Exposed	81	81	81	81	81	80	81	81	75	81	81	71	81	81	67	81	77	63	81	73	60	81	69	57	77	63	52	70	58	48	65	54	44	60	50	41	56	47	39	52	44	37
				Exposed	81	80	66	81	75	62	81	70	58	81	66	55	76	63	52	72	60	49	68	57	47	65	54	44	59	49	41	55	45	38	51	42	35	47	39	33	44	37	0	41	35	0
		1:12	4.8	Non-Exposed	78	78	78	78	78	78	78	78	75	78	78	70	78	78	66	78	76	63	78	73	60	78	69	57	76	63	52	70	58	48	65	54	44	60	50	41	56	47	39	52	44	37
				Exposed	78	78	65	78	74	61	78	70	58	78	66	54	76	63	52	72	59	49	68	57	46	65	54	44	59	49	41	54	45	38	50	42	35	47	39	33	44	37	0	41	35	0
		2:12	9.5	Non-Exposed	76	76	76	76	76	76	76	76	71	76	75	66	76	71	63	76	67	59	76	63	56	72	60	53	66	54	48	61	50	44	57	46	41	53	42	39	50	40	36	47	38	34
				Exposed	76	69	62	76	65	58	73	61	54	69	57	51	66	54	48	63	51	46	60	49	43	57	46	41	53	42	38	49	39	36	45	37	33	42	34	0	40	0	0	38	0	0
		3:12	14.0	Non-Exposed	74	74	74	74	74	74	74	74	70	74	74	66	74	70	62	74	66	59	74	63	56	72	60	53	66	54	48	61	50	44	57	46	41	53	42	38	50	40	36	47	38	34
				Exposed	74	69	61	74	65	57	73	61	54	69	57	51	66	54	48	63	51	45	60	48	43	57	46	41	53	42	38	49	39	36	45	37	33	42	34	0	40	0	0	38	0	0
		4:12	18.4	Non-Exposed	76	76	76	76	76	75	76	76	70	76	74	66	76	70	62	76	66	59	75	63	56	72	59	53	66	54	48	61	50	44	57	46	41	53	42	38	50	40	36	47	38	34
				Exposed	76	69	61	76	64	57	73	60	54	69	57	51	65	54	48	62	51	45	60	48	43	57	46	41	52	42	38	49	39	36	45	36	33	42	34	0	40	0	0	38	0	0
		5:12	22.6	Non-Exposed	77	77	77	77	77	77	77	77	77	77	77	76	77	77	71	77	73	67	77	70	64	77	66	61	77	60	55	71	55	50	66	51	46	62	47	43	58	44	40	55	41	38
				Exposed	77	76	70	77	72	65	77	67	61	77	63	58	77	60	54	73	57	52	70	54	49	67	51	46	61	47	42	57	43	39	53	40	36	49	38	34	46	35	32	44	34	0
		6:12	26.6	Non-Exposed	77	77	77	77	77	77	77	77	77	77	77	75	77	77	71	77	73	67	77	69	63	77	66	60	77	60	55	71	55	50	66	51	46	62	47	43	58	44	40	55	41	37
				Exposed	77	76	70	77	71	65	77	67	61	77	63	58	76	60	54	73	57	51	69	54	49	66	51	46	61	47	42	57	43	39	53	40	36	49	38	34	46	35	0	44	34	0
		7:12	30.3	Non-Exposed	78	78	78	78	78	78	78	78	78	78	78	78	78	78	76	78	78	72	78	78	69	77	75	66	75	68	60	69	63	55	63	58	51	58	54	47	54	50	44	51	47	41
				Exposed	78	78	75	78	78	71	78	76	66	78	72	63	75	68	59	71	64	56	67	61	54	64	58	51	58	53	47	53	49	43	49	45	40	45	42	37	42	40	35	40	38	33
		8:12	33.7	Non-Exposed	79	79	79	79	79	79	79	79	79	79	79	79	79	79	76	79	79	72	79	78	69	78	74	65	75	68	60	68	63	55	63	58	51	58	54	47	54	50	44	50	47	41
				Exposed	79	79	75	79	79	70	79	75	66	79	71	62	74	68	59	70	64	56	67	61	53	63	58	51	58	53	47	53	49	43	49	45	40	45	42	37	42	40	35	40	37	33
		9:12	36.9	Non-Exposed	80	80	80	80	80	80	80	80	80	80	80	80	80	80	76	80	80	72	80	78	68	80	74	65	74	68	59	68	62	55	63	58	51	58	54	47	54	50	44	50	47	41
				Exposed	80	80	74	80	80	70	80	75	66	78	71	62	74	67	59	70	64	56	66	61	53	63	58	51	57	53	46	53	49	43	48	45	40	45	42	37	42	40	35	39	37	33
		10:12	39.8	Non-Exposed	81	81	81	81	81	81	81	81	81	81	81	79	81	81	75	81	81	71	81	77	68	81	74	65	74	68	59	68	62	55	63	58	50	58	53	47	54	50	44	50	47	41
				Exposed	81	81	74	81	79	70	81	75	66	78	71	62	74	67	59	70	64	56	66	61	53	63	58	51	57	53	46	52	49	43	48	45	40	45	42	37	42	40	35	39	37	33
		11:12	42.5	Non-Exposed	82	82	82	82	82	82	82	82	82	82	82	79	82	82	75	82	81	71	82	77	68	81	74	65	74	67	59	68	62	54	62	57	50	58	53	47	54	50	44	50	47	41
				Exposed	82	82	74	82	79	70	82	75	66	78	71	62	73	67	59	69	64	56	66	61	53	63	58	51	57	53	46	52	49	43	48	45	40	45	42	37	42	39	35	39	37	33
		12:12	45	Non-Exposed	84	84	84	84	84	84	84	84	83	84	84	79	84	84	75	84	81	71	84	77	68	81	73	65	74	67	59	67	62	54	62	57	50	58	53	47	54	50	44	50	47	41
				Exposed	84	84	74	84	79	69	82	74	65	77	70	62	73	67	59	69	63	56	66	60	53	63	58	51	57	53	46	52	49	43	48	45	40	45	42	37	42	39	35	39	37	33
	D	Flat	0	Non-Exposed	81	81	77	81	81	72	81	81	67	81	77	63	81	73	60	81	69	57	80	66	54	76	63	51	69	57	47	63	52	43	58	49	40	54	45	38	51	42	35	47	40	34
				Exposed	81	72	59	81	67	55	77	63	52	72	60	49	68	57	47	65	54	44	62	51	42	59	49	40	54	45	37	49	41	35	46	39	33	42	36	0	40	34	0	38	0	0
		1:12	4.8	Non-Exposed	78	78	76	78	78	71	78	78	67	78	77	63	78	73	60	78	69	57	78	65	54	75	62	51	69	57	47	63	52	43	58	48	40	54	45	38	50	42	35	47	40	34
				Exposed	78	71	59	78	67	55	76	63	52	72	60	49	68	56	46	65	54	44	61	51	42	59	49	40	53	45	37	49	41	35	46	38	32	42	36	0	40	34	0	38	0	0
		2:12	9.5	Non-Exposed	76	76	72	76	76	67	76	71	63	76	67	59	76	63	56	72	60	53	69	57	50	66	54	48	60	49	44	56	45	40	52	41	38	48	39	35	45	37	33	43	35	0
				Exposed	75	62	55	70	58	52	67	55	49	63	51	46	60	48	43	57	46	41	54	44	39	52	42	38	48	38	35	44	36	33	41	34	0	39	0	0	37	0	0	35	0	0
		3:12	14.0	Non-Exposed	74	74	72	74	74	67	74	71	63	74	67	59	74	63	56	72	59	53	68	56	50	65	54	48	60	49	43	56	45	40	52	41	38	48	39	35	45	37	33	43	35	0
				Exposed	74	62	55	70	58	52	66	54	48	63	51	46	60	48	43	57	46	41	54	44	39	52	41	38	48	38	35	44	36	33	41	34	0	39	0	0	37	0	0	35	0	0
		4:12	18.4	Non-Exposed	76	76	71	76	75	67	76	70	63	76	66	59	75	63	56	71	59	53	68	56	50	65	53	48	60	49	43	55	45	40	52	41	38	48	39	35	45	37	33	43	35	0
				Exposed	74	62	55	70	58	51	66	54	48	63	51	46	60	48	43	57	46	41	54	43	39	52	41	38	48	38	35	44	36	33	41	33	0	39	0	0	37	0	0	35	0	0
		5:12	22.6	Non-Exposed	77	77	77	77	77	77	77	77	72	77	74	67	77	70	64	77	66	60	77	63	57	76	60	54	70	54	49	65	50	45	60	46	42	56	43	39	53	40	36	50	38	34
				Exposed	77	69	63	77	64	59	77	60	55	73	57	52	70	54	49	66	51	46	63	49	44	61	46	42	56	42	38	52	39	35	48	37	33	45	35	0	42	33	0	40	0	0
		6:12	26.6	Non-Exposed	77	77	77	77	77	76	77	77	71	77	73	67	77	69	63	77	66	60	77	62	57	76	59	54	70	54	49	65	50	45	60	46	41	56	43	39	53	40	36	50	38	34
				Exposed	77	68	62	77	64	58	77	60	55	73	57	52	69	54	49	66	51	46	63	48	44	61	46	42	56	42	38	52	39	35	48	37	33	45	34	0	42	0	0	40	0	0
		7:12	30.3	Non-Exposed	78	78	78	78	78	78	78	78	77	78	78	73	78	78	69	77	74	65	76	71	62	74	67	59	67	62	54	62	57	50	57	52	46	52	49	43	49	45	40	45	42	38
				Exposed	78	77	68	78	73	64	75	68	60	71	65	57	67	61	54	63	58	51	60	55	48	57	53	46	52	48	42	47	44	39	44	41	36	41	39	34	38	36	0	36	34	0
		8:12	33.7	Non-Exposed	79	79	79	79	79	79	79	79	77	79	79	72	79	78	68	78	74	65	77	71	62	74	67	59	67	61	54	61	56	49	56	52	46	52	49	42	49	45	40	45	42	37
				Exposed	79	77	67	79	72	63	75	68	60	70	64	56	67	61	53	63	58	51	60	55	48	57	53	46	52	48	42	47	44	39	44	41	36	41	39	34	38	36	0	36	34	0
		9:12	36.9	Non-Exposed	80	80	80	80	80	80	80	80	76	80	80	72	80	78	68	79	74	65	77	70	62	73	67	59	67	61	54	61	56	49	56	52	46	52	48	42	49	45	40	45	42	37
				Exposed	80	77	67	79	72	63	75	68	60	70	64	56	66	61	53	63	58	51	60	55	48	57	52	46	52	48	42	47	44	39	44	41	36	41	38	34	38	36	0	36	34	0
		10:12	39.8	Non-Exposed	81	81	81	81	81	80	81	81	76	81	81	72	81	77	68	81	74	65	77	70	61	73	67	59	67	61	54	61	56	49	56	52	46	52	48	42	48	45	40	45	42	37
				Exposed	81	76	67	79	72	63	74	68	59	70	64	56	66	61	53	63	58	50	59	55	48	57	52	46	51	48	42	47	44	39	43	41	36	41	38	34	38	36	0	36	34	0
		11:12	42.5	Non-Exposed	82	82	82	82	82	80	82	82	76	82	81	71	82	77	68	81	73	64	77	70	61	73	67	58	66	61	53	61	56	49	56	52	45	52	48	42	48	45	40	45	42	37
				Exposed	82	76	67	79	71	63	74	67	59	70	64	56	66	60	53	62	57	50	59	55	48	56	52	46	51	48	42	47	44	39	43	41	36	41	38	34	38	36	0	36	34	0
		12:12	45	Non-Exposed	84	84	84	84	84	80	84	84	75	84	81	71	84	77	68	80	73	64	76	70	61	73	66	58	66	61	53	61	56	49	56	52	45	52	48	42	48	45	40	45	42	37
				Exposed	84	76	67	78	71	63	74	67	59	69	64	56	66	60	53	62	57	50	59	55	48	56	52	46	51	48	42	47	44	39	43	41	36	40	38	34	38	36	0	36	34	0

Tamarack 2.3 Rail – Gable Flush-Mount on 30 Foot Maximum Mean Roof Height – Portrait – Panel Length = 68 Inches or Less

Ground Snow Load	Exposure Category	Roof Pitch	Roof Angle	Wind Speed (mph)	95			100			105			110			115			120			125			130			140			150			160			170			180			190		
				Roof Area	1	2	3	1	2	3	1	2	3	1	2	3	1	2	3	1	2	3	1	2	3	1	2	3	1	2	3	1	2	3	1	2	3	1	2	3	1	2	3	1	2	3
15	B	Flat	0	Non-Exposed	74	74	74	74	74	74	74	74	74	74	74	74	74	74	74	74	74	74	74	74	74	74	74	71	74	74	64	74	72	59	74	66	54	74	61	50	69	57	47	65	54	44
				Exposed	74	74	74	74	74	74	74	74	72	74	74	68	74	74	64	74	74	61	74	70	58	74	67	55	73	61	50	67	56	46	62	52	42	58	48	40	54	45	37	50	42	35
		1:12	4.8	Non-Exposed	70	70	70	70	70	70	70	70	70	70	70	70	70	70	70	70	70	70	70	70	70	70	70	70	70	70	64	70	70	59	70	66	54	70	61	50	69	57	47	64	53	44
				Exposed	70	70	70	70	70	70	70	70	70	70	70	67	70	70	64	70	70	60	70	70	57	70	66	55	70	61	50	67	56	46	62	51	42	57	48	40	54	45	37	50	42	35
		2:12	9.5	Non-Exposed	68	68	68	68	68	68	68	68	68	68	68	68	68	68	68	68	68	68	68	68	68	68	68	67	68	68	60	68	62	55	68	57	51	65	53	47	60	49	44	57	46	41
				Exposed	68	68	68	68	68	68	68	68	68	68	68	64	68	67	60	68	64	57	68	60	54	68	57	51	64	52	46	59	48	43	55	44	40	51	41	37	48	39	35	45	36	33
		3:12	14.0	Non-Exposed	66	66	66	66	66	66	66	66	66	66	66	66	66	66	66	66	66	66	66	66	66	66	66	66	66	66	60	66	62	55	66	57	51	64	53	47	60	49	44	57	46	41
				Exposed	66	66	66	66	66	66	66	66	66	66	66	63	66	66	60	66	63	56	66	60	54	66	57	51	64	52	46	59	48	42	55	44	40	51	41	37	48	38	35	45	36	33
		4:12	18.4	Non-Exposed	69	69	69	69	69	69	69	69	69	69	69	69	69	69	69	69	69	69	69	69	69	69	69	66	69	67	60	69	62	55	69	57	50	64	52	47	60	49	43	56	46	41
				Exposed	69	69	69	69	69	69	69	69	67	69	69	63	69	67	59	69	63	56	69	60	53	69	57	51	63	52	46	59	47	42	55	44	39	51	41	37	48	38	35	45	36	33
		5:12	22.6	Non-Exposed	70	70	70	70	70	70	70	70	70	70	70	70	70	70	70	70	70	70	70	70	70	70	70	70	70	70	69	70	69	63	70	63	58	70	58	53	70	54	49	66	51	46
				Exposed	70	70	70	70	70	70	70	70	70	70	70	70	70	70	68	70	70	64	70	67	61	70	64	58	70	58	53	69	53	48	64	49	44	60	45	41	56	42	38	53	40	36
		6:12	26.6	Non-Exposed	70	70	70	70	70	70	70	70	70	70	70	70	70	70	70	70	70	70	70	70	70	70	70	70	70	70	68	70	68	62	70	63	57	70	58	53	70	54	49	66	51	46
				Exposed	70	70	70	70	70	70	70	70	70	70	70	70	70	70	68	70	70	64	70	66	61	70	63	58	70	58	52	68	53	48	64	49	44	60	45	41	56	42	38	53	40	36
		7:12	30.3	Non-Exposed	72	72	72	72	72	72	72	72	72	72	72	72	72	72	72	72	72	72	72	72	72	72	72	72	72	72	72	71	71	68	69	69	62	68	66	58	66	62	54	63	58	51
				Exposed	72	72	72	72	72	72	72	72	72	72	72	72	72	72	72	72	72	69	72	72	66	72	72	63	72	66	57	66	60	53	60	56	49	56	52	45	52	48	42	48	45	40
		8:12	33.7	Non-Exposed	73	73	73	73	73	73	73	73	73	73	73	73	73	73	73	73	73	73	73	73	73	73	73	73	73	73	73	73	73	67	71	71	62	69	66	58	67	62	54	63	58	50
				Exposed	73	73	73	73	73	73	73	73	73	73	73	73	73	73	73	73	73	69	73	73	66	73	71	63	72	65	57	65	60	53	60	56	49	56	52	45	52	48	42	48	45	40
		9:12	36.9	Non-Exposed	74	74	74	74	74	74	74	74	74	74	74	74	74	74	74	74	74	74	74	74	74	74	74	74	74	74	73	74	74	67	72	71	62	70	66	58	67	61	54	62	57	50
				Exposed	74	74	74	74	74	74	74	74	74	74	74	74	74	74	73	74	74	69	74	74	66	74	71	62	71	65	57	65	60	52	60	55	49	56	51	45	52	48	42	48	45	40
		10:12	39.8	Non-Exposed	76	76	76	76	76	76	76	76	76	76	76	76	76	76	76	76	76	76	76	76	76	76	76	76	76	76	73	76	76	67	74	71	62	72	66	58	67	61	54	62	57	50
				Exposed	76	76	76	76	76	76	76	76	76	76	76	76	76	76	72	76	76	69	76	74	65	76	71	62	71	65	57	65	60	52	60	55	48	55	51	45	52	48	42	48	45	40
		11:12	42.5	Non-Exposed	77	77	77	77	77	77	77	77	77	77	77	77	77	77	77	77	77	77	77	77	77	77	77	77	77	77	73	77	76	67	75	70	62	72	65	57	67	61	54	62	57	50
				Exposed	77	77	77	77	77	77	77	77	77	77	77	76	77	77	72	77	77	68	77	74	65	77	71	62	71	65	57	65	60	52	60	55	48	55	51	45	52	48	42	48	45	40
		12:12	45	Non-Exposed	79	79	79	79	79	79	79	79	79	79	79	79	79	79	79	79	79	79	79	79	79	79	79	79	79	79	72	79	76	67	77	70	62	71	65	57	66	61	53	62	57	50
				Exposed	79	79	79	79	79	79	79	79	79	79	79	76	79	79	72	79	78	68	79	74	65	77	70	62	71	65	57	65	59	52	60	55	48	55	51	45	51	48	42	48	45	39
	C	Flat	0	Non-Exposed	74	74	74	74	74	74	74	74	74	74	74	71	74	74	67	74	74	63	74	73	60	74	69	57	74	63	52	70	58	48	65	54	44	60	50	41	56	47	39	52	44	37
				Exposed	74	74	66	74	74	62	74	70	58	74	66	55	74	63	52	72	60	49	68	57	47	65	54	44	59	49	41	55	45	38	51	42	35	47	39	33	44	37	0	41	35	0
		1:12	4.8	Non-Exposed	70	70	70	70	70	70	70	70	70	70	70	70	70	70	66	70	70	63	70	70	60	70	69	57	70	63	52	70	58	48	65	54	44	60	50	41	56	47	39	52	44	37
				Exposed	70	70	65	70	70	61	70	70	58	70	66	54	70	63	52	70	59	49	68	57	46	65	54	44	59	49	41	54	45	38	50	42	35	47	39	33	44	37	0	41	35	0
		2:12	9.5	Non-Exposed	68	68	68	68	68	68	68	68	68	68	68	66	68	68	63	68	67	59	68	63	56	68	60	53	66	54	48	61	50	44	57	46	41	53	42	39	50	40	36	47	38	34
				Exposed	68	68	62	68	65	58	68	61	54	68	57	51	66	54	48	63	51	46	60	49	43	57	46	41	53	42	38	49	39	36	45	37	33	42	34	0	40	0	0	38	0	0
		3:12	14.0	Non-Exposed	66	66	66	66	66	66	66	66	66	66	66	66	66	66	62	66	66	59	66	63	56	66	60	53	66	54	48	61	50	44	57	46	41	53	42	38	50	40	36	47	38	34
				Exposed	66	66	61	66	65	57	66	61	54	66	57	51	66	54	48	63	51	45	60	48	43	57	46	41	53	42	38	49	39	36	45	37	33	42	34	0	40	0	0	38	0	0
		4:12	18.4	Non-Exposed	69	69	69	69	69	69	69	69	69	69	69	66	69	69	62	69	66	59	69	63	56	69	59	53	66	54	48	61	50	44	57	46	41	53	42	38	50	40	36	47	38	34
				Exposed	69	69	61	69	64	57	69	60	54	69	57	51	65	54	48	62	51	45	60	48	43	57	46	41	52	42	38	49	39	36	45	36	33	42	34	0	40	0	0	38	0	0
		5:12	22.6	Non-Exposed	70	70	70	70	70	70	70	70	70	70	70	70	70	70	70	70	70	67	70	70	64	70	66	61	70	60	55	70	55	50	66	51	46	62	47	43	58	44	40	55	41	38
				Exposed	70	70	70	70	70	65	70	67	61	70	63	58	70	60	54	70	57	52	70	54	49	67	51	46	61	47	42	57	43	39	53	40	36	49	38	34	46	35	32	44	34	0
		6:12	26.6	Non-Exposed	70	70	70	70	70	70	70	70	70	70	70	70	70	70	70	70	70	67	70	69	63	70	66	60	70	60	55	70	55	50	66	51	46	62	47	43	58	44	40	55	41	37
				Exposed	70	70	70	70	70	65	70	67	61	70	63	58	70	60	54	70	57	51	69	54	49	66	51	46	61	47	42	57	43	39	53	40	36	49	38	34	46	35	0	44	34	0
		7:12	30.3	Non-Exposed	72	72	72	72	72	72	72	72	72	72	72	72	72	72	72	72	72	72	72	72	69	71	71	66	69	68	60	66	63	55	63	58	51	58	54	47	54	50	44	51	47	41
				Exposed	72	72	72	72	72	71	72	72	66	72	72	63	72	68	59	71	64	56	67	61	54	64	58	51	58	53	47	53	49	43	49	45	40	45	42	37	42	40	35	40	38	33
		8:12	33.7	Non-Exposed	73	73	73	73	73	73	73	73	73	73	73	73	73	73	73	73	73	72	73	73	69	72	72	65	70	68	60	68	63	55	63	58	51	58	54	47	54	50	44	50	47	41
				Exposed	73	73	73	73	73	70	73	73	66	73	71	62	73	68	59	70	64	56	67	61	53	63	58	51	58	53	47	53	49	43	49	45	40	45	42	37	42	40	35	40	37	33
		9:12	36.9	Non-Exposed	74	74	74	74	74	74	74	74	74	74	74	74	74	74	74	74	74	72	74	74	68	73	73	65	71	68	59	68	62	55	63	58	51	58	54	47	54	50	44	50	47	41
				Exposed	74	74	74	74	74	70	74	74	66	74	71	62	74	67	59	70	64	56	66	61	53	63	58	51	57	53	46	53	49	43	48	45	40	45	42	37	42	40	35	39	37	33
		10:12	39.8	Non-Exposed	76	76	76	76	76	76	76	76	76	76	76	76	76	76	75	76	76	71	76	76	68	75	74	65	73	68	59	68	62	55	63	58	50	58	53	47	54	50	44	50	47	41
				Exposed	76	76	74	76	76	70	76	75	66	76	71	62	74	67	59	70	64	56	66	61	53	63	58	51	57	53	46	52	49	43	48	45	40	45	42	37	42	40	35	39	37	33
		11:12	42.5	Non-Exposed	77	77	77	77	77	77	77	77	77	77	77	77	77	77	75	77	77	71	77	77	68	77	74	65	74	67	59	68	62	54	62	57	50	58	53	47	54	50	44	50	47	41
				Exposed	77	77	74	77	77	70	77	75	66	77	71	62	73	67	59	69	64	56	66	61	53	63	58	51	57	53	46	52	49	43	48	45	40	45	42	37	42	39	35	39	37	33
		12:12	45	Non-Exposed	79	79	79	79	79	79	79	79	79	79	79	79	79	79	75	79	79	71	79	77	68	78	73	65	74	67	59	67	62	54	62	57	50	58	53	47	54	50	44	50	47	41
				Exposed	79	79	74	79	79	69	79	74	65	77	70	62	73	67	59	69	63	56	66	60	53	63	58	51	57	53	46	52	49	43	48	45	40	45	42	37	42	39	35	39	37	33
	D	Flat	0	Non-Exposed	74	74	74	74	74	72	74	74	67	74	74	63	74	73	60	74	69	57	74	66	54	74	63	51	69	57	47	63	52	43	58	49	40	54	45	38	51	42	35	47	40	34
				Exposed	74	72	59	74	67	55	74	63	52	72	60	49	68	57	47	65	54	44	62	51	42	59	49	40	54	45	37	49	41	35	46	39	33	42	36	0	40	34	0	38	0	0
		1:12	4.8	Non-Exposed	70	70	70	70	70	70	70	70	67	70	70	63	70	70	60	70	69	57	70	65	54	70	62	51	69	57	47	63	52	43	58	48	40	54	45	38	50	42	35	47	40	34
				Exposed	70	70	59	70	67	55	70	63	52	70	60	49	68	56	46	65	54	44	61	51	42	59	49	40	53	45	37	49	41	35	46	38	32	42	36	0	40	34	0	38	0	0
		2:12	9.5	Non-Exposed	68	68	68	68	68	67	68	68	63	68	67	59	68	63	56	68	60	53	68	57	50	66	54	48	60	49	44	56	45	40	52	41	38	48	39	35	45	37	33	43	35	0
				Exposed	68	62	55	68	58	52	67	55	49	63	51	46	60	48	43	57	46	41	54	44	39	52	42	38	48	38	35	44	36	33	41	34	0	39	0	0	37	0	0	35	0	0
		3:12	14.0	Non-Exposed	66	66	66	66	66	66	66	66	63	66	66	59	66	63	56	66	59	53	66	56	50	65	54	48	60	49	43	56	45	40	52	41	38	48	39	35	45	37	33	43	35	0
				Exposed	66	62	55	66	58	52	66	54	48	63	51	46	60	48	43	57	46	41	54	44	39	52	41	38	48	38	35	44	36	33	41	34	0	39	0	0	37	0	0	35	0	0
		4:12	18.4	Non-Exposed	69	69	69	69	69	67	69	69	63	69	66	59	69	63	56	69	59	53	68	56	50	65	53	48	60	49	43	55	45	40	52	41	38	48	39	35	45	37	33	43	35	0
				Exposed	69	62	55	69	58	51	66	54	48	63	51	46	60	48	43	57	46	41	54	43	39	52	41	38	48	38	35	44	36	33	41	33	0	39	0	0	37	0	0	35	0	0
		5:12	22.6	Non-Exposed	70	70	70	70	70	70	70	70	70	70	70	67	70	70	64	70	66	60	70	63	57	70	60	54	70	54	49	65	50	45	60	46	42	56	43	39	53	40	36	50	38	34
				Exposed	70	69	63	70	64	59	70	60	55	70	57	52	70	54	49	66	51	46	63	49	44	61	46	42	56	42	38	52	39	35	48	37	33	45	35	0	42	33	0	40	0	0
		6:12	26.6	Non-Exposed	70	70	70	70	70	70	70	70	70	70	70	67	70	69	63	70	66	60	70	62	57	70	59	54	70	54	49	65	50	45	60	46	41	56	43	39	53	40	36	50	38	34
				Exposed	70	68	62	70	64	58	70	60	55	70	57	52	69	54	49	66	51	46	63	48	44	61	46	42	56	42	38	52	39	35	48	37	33	45	34	0	42	0	0	40	0	0
		7:12	30.3	Non-Exposed	72	72	72	72	72	72	72	72	72	72	72	72	71	71	69	70	70	65	69	69	62	68	67	59	66	62	54	62	57	50	57	52	46	52	49	43	49	45	40	45	42	38
				Exposed	72	72	68	72	72	64	72	68	60	71	65	57	67	61	54	63	58	51	60	55	48	57	53	46	52	48	42	47	44	39	44	41	36	41	39	34	38	36	0	36	34	0
		8:12	33.7	Non-Exposed	73	73	73	73	73	73	73	73	73	73	73	72	73	73	68	72	72	65	71	71	62	69	67	59	67	61	54	61	56	49	56	52	46	52	49	42	49	45	40	45	42	37
				Exposed	73	73	67	73	73	63	73	68	60	70	64	56	67	61	53	63	58	51	60	55	48	57	53	46	52	48	42	47	44	39	44	41	36	41	39	34	38	36	0	36	34	0
		9:12	36.9	Non-Exposed	74	74	74	74	74	74	74	74	74	74	74	72	74	74	68	73	73	65	72	70	62	71	67	59	67	61	54	61	56	49	56	52	46	52	48	42	49	45	40	45	42	37
				Exposed	74	74	67	74	72	63	74	68	60	70	64	56	66	61	53	63	58	51	60	55	48	57	52	46	52	48	42	47	44	39	44	41	36	41	38	34	38	36	0	36	34	0
		10:12	39.8	Non-Exposed	76	76	76	76	76	76	76	76	76	76	76	72	76	76	68	75	74	65	74	70	61	72	67	59	67	61	54	61	56	49	56	52	46	52	48	42	48	45	40	45	42	37
				Exposed	76	76	67	76	72	63	74	68	59	70	64	56	66	61	53	63	58	50	59	55	48	57	52	46	51	48	42	47	44	39	43	41	36	41	38	34	38	36	0	36	34	0
		11:12	42.5	Non-Exposed	77	77	77	77	77	77	77	77	76	77	77	71	77	77	68	76	73	64	75	70	61	73	67	58	66	61	53	61	56	49	56	52	45	52	48	42	48	45	40	45	42	37
				Exposed	77	76	67	77	71	63	74	67	59	70	64	56	66	60	53	62	57	50	59	55	48	56	52	46	51	48	42	47	44	39	43	41	36	41	38	34	38	36	0	36	34	0
		12:12	45	Non-Exposed	79	79	79	79	79	79	79	79	75	79	79	71	79	77	68	78	73	64	76	70	61	73	66	58	66	61	53	61	56	49	56	52	45	52	48	42	48	45	40	45	42	37
				Exposed	79	76	67	78	71	63	74	67	59	69	64	56	66	60	53	62	57	50	59	55	48	56	52	46	51	48	42	47	44	39	43	41	36	40	38	34	38	36	0	36	34	0

Tamarack 2.3 Rail – Gable Flush-Mount on 30 Foot Maximum Mean Roof Height – Portrait – Panel Length = 68 Inches or Less

Ground Snow Load	Exposure Category	Roof Pitch	Roof Angle	Wind Speed (mph)	95			100			105			110			115			120			125			130			140			150			160			170			180			190		
				Roof Area	1	2	3	1	2	3	1	2	3	1	2	3	1	2	3	1	2	3	1	2	3	1	2	3	1	2	3	1	2	3	1	2	3	1	2	3	1	2	3	1	2	3
20	B	Flat	0	Non-Exposed	68	68	68	68	68	68	68	68	68	68	68	68	68	68	68	68	68	68	68	68	68	68	68	68	68	68	64	68	68	59	68	66	54	68	61	50	68	57	47	65	54	44
				Exposed	68	68	68	68	68	68	68	68	68	68	68	68	68	68	64	68	68	61	68	68	58	68	67	55	68	61	50	67	56	46	62	52	42	58	48	40	54	45	37	50	42	35
		1:12	4.8	Non-Exposed	65	65	65	65	65	65	65	65	65	65	65	65	65	65	65	65	65	65	65	65	65	65	65	65	65	65	64	65	65	59	65	65	54	65	61	50	65	57	47	64	53	44
				Exposed	65	65	65	65	65	65	65	65	65	65	65	65	65	65	64	65	65	60	65	65	57	65	65	55	65	61	50	65	56	46	62	51	42	57	48	40	54	45	37	50	42	35
		2:12	9.5	Non-Exposed	62	62	62	62	62	62	62	62	62	62	62	62	62	62	62	62	62	62	62	62	62	62	62	62	62	62	60	62	62	55	62	57	51	62	53	47	60	49	44	57	46	41
				Exposed	62	62	62	62	62	62	62	62	62	62	62	62	62	62	60	62	62	57	62	60	54	62	57	51	62	52	46	59	48	43	55	44	40	51	41	37	48	39	35	45	36	33
		3:12	14.0	Non-Exposed	60	60	60	60	60	60	60	60	60	60	60	60	60	60	60	60	60	60	60	60	60	60	60	60	60	60	60	60	60	55	60	57	51	60	53	47	60	49	44	57	46	41
				Exposed	60	60	60	60	60	60	60	60	60	60	60	60	60	60	60	60	60	56	60	60	54	60	57	51	60	52	46	59	48	42	55	44	40	51	41	37	48	38	35	45	36	33
		4:12	18.4	Non-Exposed	64	64	64	64	64	64	64	64	64	64	64	64	64	64	64	64	64	64	64	64	64	64	64	64	64	64	60	64	62	55	64	57	50	64	52	47	60	49	43	56	46	41
				Exposed	64	64	64	64	64	64	64	64	64	64	64	63	64	64	59	64	63	56	64	60	53	64	57	51	63	52	46	59	47	42	55	44	39	51	41	37	48	38	35	45	36	33
		5:12	22.6	Non-Exposed	64	64	64	64	64	64	64	64	64	64	64	64	64	64	64	64	64	64	64	64	64	64	64	64	64	64	64	64	64	63	64	63	58	64	58	53	64	54	49	64	51	46
				Exposed	64	64	64	64	64	64	64	64	64	64	64	64	64	64	64	64	64	64	64	64	61	64	64	58	64	58	53	64	53	48	64	49	44	60	45	41	56	42	38	53	40	36
		6:12	26.6	Non-Exposed	65	65	65	65	65	65	65	65	65	65	65	65	65	65	65	65	65	65	65	65	65	65	65	65	65	65	65	65	65	62	65	63	57	65	58	53	65	54	49	65	51	46
				Exposed	65	65	65	65	65	65	65	65	65	65	65	65	65	65	65	65	65	64	65	65	61	65	63	58	65	58	52	65	53	48	64	49	44	60	45	41	56	42	38	53	40	36
		7:12	30.3	Non-Exposed	66	66	66	66	66	66	66	66	66	66	66	66	66	66	66	66	66	66	66	66	66	66	66	66	66	66	66	66	66	66	64	64	62	63	63	58	62	62	54	60	58	51
				Exposed	66	66	66	66	66	66	66	66	66	66	66	66	66	66	66	66	66	66	66	66	66	66	66	63	66	66	57	66	60	53	60	56	49	56	52	45	52	48	42	48	45	40
		8:12	33.7	Non-Exposed	68	68	68	68	68	68	68	68	68	68	68	68	68	68	68	68	68	68	68	68	68	68	68	68	68	68	68	67	67	67	66	66	62	64	64	58	63	62	54	61	58	50
				Exposed	68	68	68	68	68	68	68	68	68	68	68	68	68	68	68	68	68	68	68	68	66	68	68	63	68	65	57	65	60	53	60	56	49	56	52	45	52	48	42	48	45	40
		9:12	36.9	Non-Exposed	70	70	70	70	70	70	70	70	70	70	70	70	70	70	70	70	70	70	70	70	70	70	70	70	70	70	70	69	69	67	68	68	62	66	66	58	64	61	54	62	57	50
				Exposed	70	70	70	70	70	70	70	70	70	70	70	70	70	70	70	70	70	69	70	70	66	70	70	62	70	65	57	65	60	52	60	55	49	56	51	45	52	48	42	48	45	40
		10:12	39.8	Non-Exposed	71	71	71	71	71	71	71	71	71	71	71	71	71	71	71	71	71	71	71	71	71	71	71	71	71	71	71	71	71	67	69	69	62	68	66	58	66	61	54	62	57	50
				Exposed	71	71	71	71	71	71	71	71	71	71	71	71	71	71	71	71	71	69	71	71	65	71	71	62	71	65	57	65	60	52	60	55	48	55	51	45	52	48	42	48	45	40
		11:12	42.5	Non-Exposed	73	73	73	73	73	73	73	73	73	73	73	73	73	73	73	73	73	73	73	73	73	73	73	73	73	73	73	73	73	67	71	70	62	69	65	57	67	61	54	62	57	50
				Exposed	73	73	73	73	73	73	73	73	73	73	73	73	73	73	72	73	73	68	73	73	65	73	71	62	71	65	57	65	60	52	60	55	48	55	51	45	52	48	42	48	45	40
		12:12	45	Non-Exposed	75	75	75	75	75	75	75	75	75	75	75	75	75	75	75	75	75	75	75	75	75	75	75	75	75	75	72	75	75	67	73	70	62	71	65	57	66	61	53	62	57	50
				Exposed	75	75	75	75	75	75	75	75	75	75	75	75	75	75	72	75	75	68	75	74	65	75	70	62	71	65	57	65	59	52	60	55	48	55	51	45	51	48	42	48	45	39
	C	Flat	0	Non-Exposed	68	68	68	68	68	68	68	68	68	68	68	68	68	68	67	68	68	63	68	68	60	68	68	57	68	63	52	68	58	48	65	54	44	60	50	41	56	47	39	52	44	37
				Exposed	68	68	66	68	68	62	68	68	58	68	66	55	68	63	52	68	60	49	68	57	47	65	54	44	59	49	41	55	45	38	51	42	35	47	39	33	44	37	0	41	35	0
		1:12	4.8	Non-Exposed	65	65	65	65	65	65	65	65	65	65	65	65	65	65	65	65	65	63	65	65	60	65	65	57	65	63	52	65	58	48	65	54	44	60	50	41	56	47	39	52	44	37
				Exposed	65	65	65	65	65	61	65	65	58	65	65	54	65	63	52	65	59	49	65	57	46	65	54	44	59	49	41	54	45	38	50	42	35	47	39	33	44	37	0	41	35	0
		2:12	9.5	Non-Exposed	62	62	62	62	62	62	62	62	62	62	62	62	62	62	62	62	62	59	62	62	56	62	60	53	62	54	48	61	50	44	57	46	41	53	42	39	50	40	36	47	38	34
				Exposed	62	62	62	62	62	58	62	61	54	62	57	51	62	54	48	62	51	46	60	49	43	57	46	41	53	42	38	49	39	36	45	37	33	42	34	0	40	0	0	38	0	0
		3:12	14.0	Non-Exposed	60	60	60	60	60	60	60	60	60	60	60	60	60	60	60	60	60	59	60	60	56	60	60	53	60	54	48	60	50	44	57	46	41	53	42	38	50	40	36	47	38	34
				Exposed	60	60	60	60	60	57	60	60	54	60	57	51	60	54	48	60	51	45	60	48	43	57	46	41	53	42	38	49	39	36	45	37	33	42	34	0	40	0	0	38	0	0
		4:12	18.4	Non-Exposed	64	64	64	64	64	64	64	64	64	64	64	64	64	64	62	64	64	59	64	63	56	64	59	53	64	54	48	61	50	44	57	46	41	53	42	38	50	40	36	47	38	34
				Exposed	64	64	61	64	64	57	64	60	54	64	57	51	64	54	48	62	51	45	60	48	43	57	46	41	52	42	38	49	39	36	45	36	33	42	34	0	40	0	0	38	0	0
		5:12	22.6	Non-Exposed	64	64	64	64	64	64	64	64	64	64	64	64	64	64	64	64	64	64	64	64	64	64	64	61	64	60	55	64	55	50	64	51	46	62	47	43	58	44	40	55	41	38
				Exposed	64	64	64	64	64	64	64	64	61	64	63	58	64	60	54	64	57	52	64	54	49	64	51	46	61	47	42	57	43	39	53	40	36	49	38	34	46	35	32	44	34	0
		6:12	26.6	Non-Exposed	65	65	65	65	65	65	65	65	65	65	65	65	65	65	65	65	65	65	65	65	63	65	65	60	65	60	55	65	55	50	65	51	46	62	47	43	58	44	40	55	41	37
				Exposed	65	65	65	65	65	65	65	65	61	65	63	58	65	60	54	65	57	51	65	54	49	65	51	46	61	47	42	57	43	39	53	40	36	49	38	34	46	35	0	44	34	0
		7:12	30.3	Non-Exposed	66	66	66	66	66	66	66	66	66	66	66	66	66	66	66	66	66	66	66	66	66	65	65	65	64	64	60	62	62	55	60	58	51	58	54	47	54	50	44	51	47	41
				Exposed	66	66	66	66	66	66	66	66	66	66	66	63	66	66	59	66	64	56	66	61	54	64	58	51	58	53	47	53	49	43	49	45	40	45	42	37	42	40	35	40	38	33
		8:12	33.7	Non-Exposed	68	68	68	68	68	68	68	68	68	68	68	68	68	68	68	68	68	68	68	68	68	67	67	65	65	65	60	63	63	55	62	58	51	58	54	47	54	50	44	50	47	41
				Exposed	68	68	68	68	68	68	68	68	66	68	68	62	68	68	59	68	64	56	67	61	53	63	58	51	58	53	47	53	49	43	49	45	40	45	42	37	42	40	35	40	37	33
		9:12	36.9	Non-Exposed	70	70	70	70	70	70	70	70	70	70	70	70	70	70	70	70	70	70	69	69	68	68	68	65	67	67	59	65	62	55	63	58	51	58	54	47	54	50	44	50	47	41
				Exposed	70	70	70	70	70	70	70	70	66	70	70	62	70	67	59	70	64	56	66	61	53	63	58	51	57	53	46	53	49	43	48	45	40	45	42	37	42	40	35	39	37	33
		10:12	39.8	Non-Exposed	71	71	71	71	71	71	71	71	71	71	71	71	71	71	71	71	71	71	71	71	68	70	70	65	68	68	59	66	62	55	63	58	50	58	53	47	54	50	44	50	47	41
				Exposed	71	71	71	71	71	70	71	71	66	71	71	62	71	67	59	70	64	56	66	61	53	63	58	51	57	53	46	52	49	43	48	45	40	45	42	37	42	40	35	39	37	33
		11:12	42.5	Non-Exposed	73	73	73	73	73	73	73	73	73	73	73	73	73	73	73	73	73	71	73	73	68	72	72	65	70	67	59	68	62	54	62	57	50	58	53	47	54	50	44	50	47	41
				Exposed	73	73	73	73	73	70	73	73	66	73	71	62	73	67	59	69	64	56	66	61	53	63	58	51	57	53	46	52	49	43	48	45	40	45	42	37	42	39	35	39	37	33
		12:12	45	Non-Exposed	75	75	75	75	75	75	75	75	75	75	75	75	75	75	75	75	75	71	75	75	68	74	73	65	72	67	59	67	62	54	62	57	50	58	53	47	54	50	44	50	47	41
				Exposed	75	75	74	75	75	69	75	74	65	75	70	62	73	67	59	69	63	56	66	60	53	63	58	51	57	53	46	52	49	43	48	45	40	45	42	37	42	39	35	39	37	33
	D	Flat	0	Non-Exposed	68	68	68	68	68	68	68	68	67	68	68	63	68	68	60	68	68	57	68	66	54	68	63	51	68	57	47	63	52	43	58	49	40	54	45	38	51	42	35	47	40	34
				Exposed	68	68	59	68	67	55	68	63	52	68	60	49	68	57	47	65	54	44	62	51	42	59	49	40	54	45	37	49	41	35	46	39	33	42	36	0	40	34	0	38	0	0
		1:12	4.8	Non-Exposed	65	65	65	65	65	65	65	65	65	65	65	63	65	65	60	65	65	57	65	65	54	65	62	51	65	57	47	63	52	43	58	48	40	54	45	38	50	42	35	47	40	34
				Exposed	65	65	59	65	65	55	65	63	52	65	60	49	65	56	46	65	54	44	61	51	42	59	49	40	53	45	37	49	41	35	46	38	32	42	36	0	40	34	0	38	0	0
		2:12	9.5	Non-Exposed	62	62	62	62	62	62	62	62	62	62	62	59	62	62	56	62	60	53	62	57	50	62	54	48	60	49	44	56	45	40	52	41	38	48	39	35	45	37	33	43	35	0
				Exposed	62	62	55	62	58	52	62	55	49	62	51	46	60	48	43	57	46	41	54	44	39	52	42	38	48	38	35	44	36	33	41	34	0	39	0	0	37	0	0	35	0	0
		3:12	14.0	Non-Exposed	60	60	60	60	60	60	60	60	60	60	60	59	60	60	56	60	59	53	60	56	50	60	54	48	60	49	43	56	45	40	52	41	38	48	39	35	45	37	33	43	35	0
				Exposed	60	60	55	60	58	52	60	54	48	60	51	46	60	48	43	57	46	41	54	44	39	52	41	38	48	38	35	44	36	33	41	34	0	39	0	0	37	0	0	35	0	0
		4:12	18.4	Non-Exposed	64	64	64	64	64	64	64	64	63	64	64	59	64	63	56	64	59	53	64	56	50	64	53	48	60	49	43	55	45	40	52	41	38	48	39	35	45	37	33	43	35	0
				Exposed	64	62	55	64	58	51	64	54	48	63	51	46	60	48	43	57	46	41	54	43	39	52	41	38	48	38	35	44	36	33	41	33	0	39	0	0	37	0	0	35	0	0
		5:12	22.6	Non-Exposed	64	64	64	64	64	64	64	64	64	64	64	64	64	64	64	64	64	60	64	63	57	64	60	54	64	54	49	64	50	45	60	46	42	56	43	39	53	40	36	50	38	34
				Exposed	64	64	63	64	64	59	64	60	55	64	57	52	64	54	49	64	51	46	63	49	44	61	46	42	56	42	38	52	39	35	48	37	33	45	35	0	42	33	0	40	0	0
		6:12	26.6	Non-Exposed	65	65	65	65	65	65	65	65	65	65	65	65	65	65	63	65	65	60	65	62	57	65	59	54	65	54	49	65	50	45	60	46	41	56	43	39	53	40	36	50	38	34
				Exposed	65	65	62	65	64	58	65	60	55	65	57	52	65	54	49	65	51	46	63	48	44	61	46	42	56	42	38	52	39	35	48	37	33	45	34	0	42	0	0	40	0	0
		7:12	30.3	Non-Exposed	66	66	66	66	66	66	66	66	66	66	66	66	66	66	66	65	65	65	64	64	62	63	63	59	62	62	54	60	57	50	57	52	46	52	49	43	49	45	40	45	42	38
				Exposed	66	66	66	66	66	64	66	66	60	66	65	57	66	61	54	63	58	51	60	55	48	57	53	46	52	48	42	47	44	39	44	41	36	41	39	34	38	36	0	36	34	0
		8:12	33.7	Non-Exposed	68	68	68	68	68	68	68	68	68	68	68	68	68	68	68	67	67	65	66	66	62	65	65	59	63	61	54	61	56	49	56	52	46	52	49	42	49	45	40	45	42	37
				Exposed	68	68	67	68	68	63	68	68	60	68	64	56	67	61	53	63	58	51	60	55	48	57	53	46	52	48	42	47	44	39	44	41	36	41	39	34	38	36	0	36	34	0
		9:12	36.9	Non-Exposed	70	70	70	70	70	70	70	70	70	70	70	70	69	69	68	68	68	65	67	67	62	66	66	59	64	61	54	61	56	49	56	52	46	52	48	42	49	45	40	45	42	37
				Exposed	70	70	67	70	70	63	70	68	60	70	64	56	66	61	53	63	58	51	60	55	48	57	52	46	52	48	42	47	44	39	44	41	36	41	38	34	38	36	0	36	34	0
		10:12	39.8	Non-Exposed	71	71	71	71	71	71	71	71	71	71	71	71	71	71	68	70	70	65	69	69	61	68	67	59	66	61	54	61	56	49	56	52	46	52	48	42	48	45	40	45	42	37
				Exposed	71	71	67	71	71	63	71	68	59	70	64	56	66	61	53	63	58	50	59	55	48	57	52	46	51	48	42	47	44	39	43	41	36	41	38	34	38	36	0	36	34	0
		11:12	42.5	Non-Exposed	73	73	73	73	73	73	73	73	73	73	73	71	73	73	68	72	72	64	71	70	61	70	67	58	66	61	53	61	56	49	56	52	45	52	48	42	48	45	40	45	42	37
				Exposed	73	73	67	73	71	63	73	67	59	70	64	56	66	60	53	62	57	50	59	55	48	56	52	46	51	48	42	47	44	39	43	41	36	41	38	34	38	36	0	36	34	0
		12:12	45	Non-Exposed	75	75	75	75	75	75	75	75	75	75	75	71	75	75	68	74	73	64	73	70	61	71	66	58	66	61	53	61	56	49	56	52	45	52	48	42	48	45	40	45	42	37
				Exposed	75	75	67	75	71	63	74	67	59	69	64	56	66	60	53	62	57	50	59	55	48	56	52	46	51	48	42	47	44	39	43	41	36	40	38	34	38	36	0	36	34	0

Tamarack 2.3 Rail – Gable Flush-Mount on 30 Foot Maximum Mean Roof Height – Portrait – Panel Length = 68 Inches or Less

Ground Snow Load	Exposure Category	Roof Pitch	Roof Angle	Wind Speed (mph)	95			100			105			110			115			120			125			130			140			150			160			170			180			190		
				Roof Area	1	2	3	1	2	3	1	2	3	1	2	3	1	2	3	1	2	3	1	2	3	1	2	3	1	2	3	1	2	3	1	2	3	1	2	3	1	2	3	1	2	3
25	B	Flat	0	Non-Exposed	67	67	67	67	67	67	67	67	67	67	67	67	67	67	67	67	67	67	67	67	67	67	67	67	67	67	64	67	67	59	67	66	54	67	61	50	67	57	47	65	54	44
				Exposed	67	67	67	67	67	67	67	67	67	67	67	67	67	67	64	67	67	61	67	67	58	67	67	55	67	61	50	67	56	46	62	52	42	58	48	40	54	45	37	50	42	35
		1:12	4.8	Non-Exposed	64	64	64	64	64	64	64	64	64	64	64	64	64	64	64	64	64	64	64	64	64	64	64	64	64	64	64	64	64	59	64	64	54	64	61	50	64	57	47	64	53	44
				Exposed	64	64	64	64	64	64	64	64	64	64	64	64	64	64	64	64	64	60	64	64	57	64	64	55	64	61	50	64	56	46	62	51	42	57	48	40	54	45	37	50	42	35
		2:12	9.5	Non-Exposed	61	61	61	61	61	61	61	61	61	61	61	61	61	61	61	61	61	61	61	61	61	61	61	61	61	61	60	61	61	55	61	57	51	61	53	47	60	49	44	57	46	41
				Exposed	61	61	61	61	61	61	61	61	61	61	61	61	61	61	60	61	61	57	61	60	54	61	57	51	61	52	46	59	48	43	55	44	40	51	41	37	48	39	35	45	36	33
		3:12	14.0	Non-Exposed	59	59	59	59	59	59	59	59	59	59	59	59	59	59	59	59	59	59	59	59	59	59	59	59	59	59	59	59	59	55	59	57	51	59	53	47	59	49	44	57	46	41
				Exposed	59	59	59	59	59	59	59	59	59	59	59	59	59	59	59	59	59	56	59	59	54	59	57	51	59	52	46	59	48	42	55	44	40	51	41	37	48	38	35	45	36	33
		4:12	18.4	Non-Exposed	59	59	59	59	59	59	59	59	59	59	59	59	59	59	59	59	59	59	59	59	59	59	59	59	59	59	59	59	59	55	59	57	50	59	52	47	59	49	43	56	46	41
				Exposed	59	59	59	59	59	59	59	59	59	59	59	59	59	59	59	59	59	56	59	59	53	59	57	51	59	52	46	59	47	42	55	44	39	51	41	37	48	38	35	45	36	33
		5:12	22.6	Non-Exposed	60	60	60	60	60	60	60	60	60	60	60	60	60	60	60	60	60	60	60	60	60	60	60	60	60	60	60	60	60	60	60	60	58	60	58	53	60	54	49	59	51	46
				Exposed	60	60	60	60	60	60	60	60	60	60	60	60	60	60	60	60	60	60	60	60	60	60	60	58	60	58	53	60	53	48	60	49	44	60	45	41	56	42	38	53	40	36
		6:12	26.6	Non-Exposed	61	61	61	61	61	61	61	61	61	61	61	61	61	61	61	61	61	61	61	61	61	61	61	61	61	61	61	61	61	61	61	61	57	61	58	53	61	54	49	61	51	46
				Exposed	61	61	61	61	61	61	61	61	61	61	61	61	61	61	61	61	61	61	61	61	61	61	61	58	61	58	52	61	53	48	61	49	44	60	45	41	56	42	38	53	40	36
		7:12	30.3	Non-Exposed	62	62	62	62	62	62	62	62	62	62	62	62	62	62	62	62	62	62	62	62	62	62	62	62	62	62	62	62	62	62	60	60	60	59	59	58	58	58	54	57	57	51
				Exposed	62	62	62	62	62	62	62	62	62	62	62	62	62	62	62	62	62	62	62	62	62	62	62	62	62	62	57	62	60	53	60	56	49	56	52	45	52	48	42	48	45	40
		8:12	33.7	Non-Exposed	64	64	64	64	64	64	64	64	64	64	64	64	64	64	64	64	64	64	64	64	64	64	64	64	64	64	64	63	63	63	62	62	62	61	61	58	59	59	54	58	58	50
				Exposed	64	64	64	64	64	64	64	64	64	64	64	64	64	64	64	64	64	64	64	64	63	64	64	57	63	60	53	60	56	49	56	52	45	52	48	42	48	45	40
		9:12	36.9	Non-Exposed	66	66	66	66	66	66	66	66	66	66	66	66	66	66	66	66	66	66	66	66	66	66	66	66	66	66	66	65	65	65	64	64	62	62	62	58	61	61	54	60	57	50
				Exposed	66	66	66	66	66	66	66	66	66	66	66	66	66	66	66	66	66	66	66	66	66	66	66	62	66	65	57	65	60	52	60	55	49	56	51	45	52	48	42	48	45	40
		10:12	39.8	Non-Exposed	67	67	67	67	67	67	67	67	67	67	67	67	67	67	67	67	67	67	67	67	67	67	67	67	67	67	67	65	65	62	65	65	62	64	64	58	63	61	54	61	57	50
				Exposed	67	67	67	67	67	67	67	67	67	67	67	67	67	67	67	67	67	67	67	67	65	67	67	62	67	65	57	65	60	52	60	55	48	55	51	45	52	48	42	48	45	40
		11:12	42.5	Non-Exposed	69	69	69	69	69	69	69	69	69	69	69	69	69	69	69	69	69	69	69	69	69	69	69	69	69	69	69	69	69	67	67	67	62	66	65	57	64	61	54	62	57	50
				Exposed	69	69	69	69	69	69	69	69	69	69	69	69	69	69	69	69	69	68	69	69	65	69	69	62	69	65	57	65	60	52	60	55	48	55	51	45	52	48	42	48	45	40
		12:12	45	Non-Exposed	71	71	71	71	71	71	71	71	71	71	71	71	71	71	71	71	71	71	71	71	71	71	71	71	71	71	71	71	71	67	69	69	62	68	65	57	66	61	53	62	57	50
				Exposed	71	71	71	71	71	71	71	71	71	71	71	71	71	71	71	71	71	68	71	71	65	71	70	62	71	65	57	65	59	52	60	55	48	55	51	45	51	48	42	48	45	39
	C	Flat	0	Non-Exposed	67	67	67	67	67	67	67	67	67	67	67	67	67	67	67	67	67	63	67	67	60	67	67	57	67	63	52	67	58	48	65	54	44	60	50	41	56	47	39	52	44	37
				Exposed	67	67	66	67	67	62	67	67	58	67	66	55	67	63	52	67	60	49	67	57	47	65	54	44	59	49	41	55	45	38	51	42	35	47	39	33	44	37	0	41	35	0
		1:12	4.8	Non-Exposed	64	64	64	64	64	64	64	64	64	64	64	64	64	64	64	64	64	63	64	64	60	64	64	57	64	63	52	64	58	48	64	54	44	60	50	41	56	47	39	52	44	37
				Exposed	64	64	64	64	64	61	64	64	58	64	64	54	64	63	52	64	59	49	64	57	46	64	54	44	59	49	41	54	45	38	50	42	35	47	39	33	44	37	0	41	35	0
		2:12	9.5	Non-Exposed	61	61	61	61	61	61	61	61	61	61	61	61	61	61	61	61	61	59	61	61	56	61	60	53	61	54	48	61	50	44	57	46	41	53	42	39	50	40	36	47	38	34
				Exposed	61	61	61	61	61	58	61	61	54	61	57	51	61	54	48	61	51	46	60	49	43	57	46	41	53	42	38	49	39	36	45	37	33	42	34	0	40	0	0	38	0	0
		3:12	14.0	Non-Exposed	59	59	59	59	59	59	59	59	59	59	59	59	59	59	59	59	59	59	59	59	56	59	59	53	59	54	48	59	50	44	57	46	41	53	42	38	50	40	36	47	38	34
				Exposed	59	59	59	59	59	57	59	59	54	59	57	51	59	54	48	59	51	45	59	48	43	57	46	41	53	42	38	49	39	36	45	37	33	42	34	0	40	0	0	38	0	0
		4:12	18.4	Non-Exposed	59	59	59	59	59	59	59	59	59	59	59	59	59	59	59	59	59	59	59	59	56	59	59	53	59	54	48	59	50	44	57	46	41	53	42	38	50	40	36	47	38	34
				Exposed	59	59	59	59	59	57	59	59	54	59	57	51	59	54	48	59	51	45	59	48	43	57	46	41	52	42	38	49	39	36	45	36	33	42	34	0	40	0	0	38	0	0
		5:12	22.6	Non-Exposed	60	60	60	60	60	60	60	60	60	60	60	60	60	60	60	60	60	60	60	60	60	60	60	60	60	60	55	60	55	50	59	51	46	59	47	43	58	44	40	55	41	38
				Exposed	60	60	60	60	60	60	60	60	60	60	60	58	60	60	54	60	57	52	60	54	49	60	51	46	60	47	42	57	43	39	53	40	36	49	38	34	46	35	32	44	34	0
		6:12	26.6	Non-Exposed	61	61	61	61	61	61	61	61	61	61	61	61	61	61	61	61	61	61	61	61	61	61	61	61	61	60	55	61	55	50	61	51	46	60	47	43	58	44	40	55	41	37
				Exposed	61	61	61	61	61	61	61	61	61	61	61	58	61	60	54	61	57	51	61	54	49	61	51	46	61	47	42	57	43	39	53	40	36	49	38	34	46	35	0	44	34	0
		7:12	30.3	Non-Exposed	62	62	62	62	62	62	62	62	62	62	62	62	62	62	62	62	62	62	62	62	62	61	61	61	60	60	60	58	58	55	57	57	51	56	54	47	54	50	44	51	47	41
				Exposed	62	62	62	62	62	62	62	62	62	62	62	62	62	62	59	62	62	56	62	61	54	61	58	51	58	53	47	53	49	43	49	45	40	45	42	37	42	40	35	40	38	33
		8:12	33.7	Non-Exposed	64	64	64	64	64	64	64	64	64	64	64	64	64	64	64	64	64	64	63	63	63	63	63	63	61	61	60	60	60	55	58	58	51	57	54	47	54	50	44	50	47	41
				Exposed	64	64	64	64	64	64	64	64	64	64	64	62	64	64	59	64	64	56	63	61	53	63	58	51	58	53	47	53	49	43	49	45	40	45	42	37	42	40	35	40	37	33
		9:12	36.9	Non-Exposed	66	66	66	66	66	66	66	66	66	66	66	66	66	66	66	66	66	66	65	65	65	64	64	64	63	63	59	61	61	55	60	58	51	58	54	47	54	50	44	50	47	41
				Exposed	66	66	66	66	66	66	66	66	66	66	66	62	66	66	59	66	64	56	65	61	53	63	58	51	57	53	46	53	49	43	48	45	40	45	42	37	42	40	35	39	37	33
		10:12	39.8	Non-Exposed	67	67	67	67	67	67	67	67	67	67	67	67	67	67	67	67	67	67	67	67	67	66	66	65	65	65	59	63	62	55	61	58	50	58	53	47	54	50	44	50	47	41
				Exposed	67	67	67	67	67	67	67	67	66	67	67	62	67	67	59	67	64	56	66	61	53	63	58	51	57	53	46	52	49	43	48	45	40	45	42	37	42	40	35	39	37	33
		11:12	42.5	Non-Exposed	69	69	69	69	69	69	69	69	69	69	69	69	69	69	69	69	69	69	69	69	68	68	68	65	66	66	59	65	62	54	62	57	50	58	53	47	54	50	44	50	47	41
				Exposed	69	69	69	69	69	69	69	69	66	69	69	62	69	67	59	69	64	56	66	61	53	63	58	51	57	53	46	52	49	43	48	45	40	45	42	37	42	39	35	39	37	33
		12:12	45	Non-Exposed	71	71	71	71	71	71	71	71	71	71	71	71	71	71	71	71	71	71	71	71	68	70	70	65	68	67	59	66	62	54	62	57	50	58	53	47	54	50	44	50	47	41
				Exposed	71	71	71	71	71	69	71	71	65	71	70	62	71	67	59	69	63	56	66	60	53	63	58	51	57	53	46	52	49	43	48	45	40	45	42	37	42	39	35	39	37	33
	D	Flat	0	Non-Exposed	67	67	67	67	67	67	67	67	67	67	67	63	67	67	60	67	67	57	67	66	54	67	63	51	67	57	47	63	52	43	58	49	40	54	45	38	51	42	35	47	40	34
				Exposed	67	67	59	67	67	55	67	63	52	67	60	49	67	57	47	65	54	44	62	51	42	59	49	40	54	45	37	49	41	35	46	39	33	42	36	0	40	34	0	38	0	0
		1:12	4.8	Non-Exposed	64	64	64	64	64	64	64	64	64	64	64	63	64	64	60	64	64	57	64	64	54	64	62	51	64	57	47	63	52	43	58	48	40	54	45	38	50	42	35	47	40	34
				Exposed	64	64	59	64	64	55	64	63	52	64	60	49	64	56	46	64	54	44	61	51	42	59	49	40	53	45	37	49	41	35	46	38	32	42	36	0	40	34	0	38	0	0
		2:12	9.5	Non-Exposed	61	61	61	61	61	61	61	61	61	61	61	59	61	61	56	61	60	53	61	57	50	61	54	48	60	49	44	56	45	40	52	41	38	48	39	35	45	37	33	43	35	0
				Exposed	61	61	55	61	58	52	61	55	49	61	51	46	60	48	43	57	46	41	54	44	39	52	42	38	48	38	35	44	36	33	41	34	0	39	0	0	37	0	0	35	0	0
		3:12	14.0	Non-Exposed	59	59	59	59	59	59	59	59	59	59	59	59	59	59	56	59	59	53	59	56	50	59	54	48	59	49	43	56	45	40	52	41	38	48	39	35	45	37	33	43	35	0
				Exposed	59	59	55	59	58	52	59	54	48	59	51	46	59	48	43	57	46	41	54	44	39	52	41	38	48	38	35	44	36	33	41	34	0	39	0	0	37	0	0	35	0	0
		4:12	18.4	Non-Exposed	59	59	59	59	59	59	59	59	59	59	59	59	59	59	56	59	59	53	59	56	50	59	53	48	59	49	43	55	45	40	52	41	38	48	39	35	45	37	33	43	35	0
				Exposed	59	59	55	59	58	51	59	54	48	59	51	46	59	48	43	57	46	41	54	43	39	52	41	38	48	38	35	44	36	33	41	33	0	39	0	0	37	0	0	35	0	0
		5:12	22.6	Non-Exposed	60	60	60	60	60	60	60	60	60	60	60	60	60	60	60	60	60	60	60	60	57	60	60	54	60	54	49	59	50	45	58	46	42	56	43	39	53	40	36	50	38	34
				Exposed	60	60	60	60	60	59	60	60	55	60	57	52	60	54	49	60	51	46	60	49	44	60	46	42	56	42	38	52	39	35	48	37	33	45	35	0	42	33	0	40	0	0
		6:12	26.6	Non-Exposed	61	61	61	61	61	61	61	61	61	61	61	61	61	61	61	61	61	60	61	61	57	61	59	54	61	54	49	60	50	45	59	46	41	56	43	39	53	40	36	50	38	34
				Exposed	61	61	61	61	61	58	61	60	55	61	57	52	61	54	49	61	51	46	61	48	44	61	46	42	56	42	38	52	39	35	48	37	33	45	34	0	42	0	0	40	0	0
		7:12	30.3	Non-Exposed	62	62	62	62	62	62	62	62	62	62	62	62	62	62	62	62	61	61	60	60	60	60	59	58	58	54	56	56	50	55	52	46	52	49	43	49	45	40	45	42	38
				Exposed	62	62	62	62	62	62	62	62	60	62	62	57	62	61	54	61	58	51	60	55	48	57	53	46	52	48	42	47	44	39	44	41	36	41	39	34	38	36	0	36	34	0
		8:12	33.7	Non-Exposed	64	64	64	64	64	64	64	64	64	64	64	64	63	63	63	63	63	63	62	62	62	61	61	59	59	59	54	58	56	49	56	52	46	52	49	42	49	45	40	45	42	37
				Exposed	64	64	64	64	64	63	64	64	60	64	64	56	63	61	53	63	58	51	60	55	48	57	53	46	52	48	42	47	44	39	44	41	36	41	39	34	38	36	0	36	34	0
		9:12	36.9	Non-Exposed	66	66	66	66	66	66	66	66	66	66	66	66	65	65	65	64	64	64	64	64	62	63	63	59	61	61	54	59	56	49	56	52	46	52	48	42	49	45	40	45	42	37
				Exposed	66	66	66	66	66	63	66	66	60	66	64	56	65	61	53	63	58	51	60	55	48	57	52	46	52	48	42	47	44	39	44	41	36	41	38	34	38	36	0	36	34	0
		10:12	39.8	Non-Exposed	67	67	67	67	67	67	67	67	67	67	67	67	67	67	67	66	66	65	65	65	61	64	64	59	62	61	54	61	56	49	56	52	46	52	48	42	48	45	40	45	42	37
				Exposed	67	67	67	67	67	63	67	67	59	67	64	56	66	61	53	63	58	50	59	55	48	57	52	46	51	48	42	47	44	39	43	41	36	41	38	34	38	36	0	36	34	0
		11:12	42.5	Non-Exposed	69	69	69	69	69	69	69	69	69	69	69	69	69	69	68	68	68	64	67	67	61	66	66	58	64	61	53	61	56	49	56	52	45	52	48	42	48	45	40	45	42	37
				Exposed	69	69	67	69	69	63	69	67	59	69	64	56	66	60	53	62	57	50	59	55	48	56	52	46	51	48	42	47	44	39	43	41	36	41	38	34	38	36	0	36	34	0
		12:12	45	Non-Exposed	71	71	71	71	71	71	71	71	71	71	71	71	71	71	68	70	70	64	69	69	61	68	66	58	66	61	53	61	56	49	56	52	45	52	48	42	48	45	40	45	42	37
				Exposed	71	71	67	71	71	63	71	67	59	69	64	56	66	60	53	62	57	50	59	55	48	56	52	46	51	48	42	47	44	39	43	41	36	40	38	34	38	36	0	36	34	0

Tamarack 2.3 Rail – Gable Flush-Mount on 30 Foot Maximum Mean Roof Height – Portrait – Panel Length = 68 Inches or Less

Ground Snow Load	Exposure Category	Roof Pitch	Roof Angle	Wind Speed (mph)	95			100			105			110			115			120			125			130			140			150			160			170			180			190		
				Roof Area	1	2	3	1	2	3	1	2	3	1	2	3	1	2	3	1	2	3	1	2	3	1	2	3	1	2	3	1	2	3	1	2	3	1	2	3	1	2	3	1	2	3
30	B	Flat	0	Non-Exposed	63	63	63	63	63	63	63	63	63	63	63	63	63	63	63	63	63	63	63	63	63	63	63	63	63	63	63	63	63	59	63	63	54	63	61	50	63	57	47	63	54	44
				Exposed	63	63	63	63	63	63	63	63	63	63	63	63	63	63	63	63	63	61	63	63	58	63	63	55	63	61	50	63	56	46	62	52	42	58	48	40	54	45	37	50	42	35
		1:12	4.8	Non-Exposed	59	59	59	59	59	59	59	59	59	59	59	59	59	59	59	59	59	59	59	59	59	59	59	59	59	59	59	59	59	59	59	59	54	59	59	50	59	57	47	59	53	44
				Exposed	59	59	59	59	59	59	59	59	59	59	59	59	59	59	59	59	59	59	59	59	57	59	59	55	59	59	50	59	56	46	59	51	42	57	48	40	54	45	37	50	42	35
		2:12	9.5	Non-Exposed	56	56	56	56	56	56	56	56	56	56	56	56	56	56	56	56	56	56	56	56	56	56	56	56	56	56	56	56	56	55	56	56	51	56	53	47	56	49	44	56	46	41
				Exposed	56	56	56	56	56	56	56	56	56	56	56	56	56	56	56	56	56	56	56	56	54	56	56	51	56	52	46	56	48	43	55	44	40	51	41	37	48	39	35	45	36	33
		3:12	14.0	Non-Exposed	54	54	54	54	54	54	54	54	54	54	54	54	54	54	54	54	54	54	54	54	54	54	54	54	54	54	54	54	54	54	54	54	51	54	53	47	54	49	44	54	46	41
				Exposed	54	54	54	54	54	54	54	54	54	54	54	54	54	54	54	54	54	54	54	54	51	54	54	51	54	52	46	54	48	42	54	44	40	51	41	37	48	38	35	45	36	33
		4:12	18.4	Non-Exposed	54	54	54	54	54	54	54	54	54	54	54	54	54	54	54	54	54	54	54	54	54	54	54	54	54	54	54	54	54	54	54	54	50	54	52	47	54	49	43	54	46	41
				Exposed	54	54	54	54	54	54	54	54	54	54	54	54	54	54	54	54	54	54	54	54	53	54	54	51	54	52	46	54	47	42	54	44	39	51	41	37	48	38	35	45	36	33
		5:12	22.6	Non-Exposed	55	55	55	55	55	55	55	55	55	55	55	55	55	55	55	55	55	55	55	55	55	55	55	55	55	55	55	55	55	55	55	55	55	55	55	53	55	54	49	55	51	46
				Exposed	55	55	55	55	55	55	55	55	55	55	55	55	55	55	55	55	55	55	55	55	55	55	55	55	55	55	53	55	53	48	55	49	44	55	45	41	55	42	38	53	40	36
		6:12	26.6	Non-Exposed	56	56	56	56	56	56	56	56	56	56	56	56	56	56	56	56	56	56	56	56	56	56	56	56	56	56	56	56	56	56	56	56	56	56	56	53	56	54	49	56	51	46
				Exposed	56	56	56	56	56	56	56	56	56	56	56	56	56	56	56	56	56	56	56	56	56	56	56	56	56	56	52	56	53	48	56	49	44	56	45	41	56	42	38	53	40	36
		7:12	30.3	Non-Exposed	58	58	58	58	58	58	58	58	58	58	58	58	58	58	58	58	58	58	58	58	58	58	58	58	58	58	58	58	58	58	57	57	57	56	56	56	55	55	54	54	54	51
				Exposed	58	58	58	58	58	58	58	58	58	58	58	58	58	58	58	58	58	58	58	58	58	58	58	58	58	58	57	58	58	53	57	56	49	56	52	45	52	48	42	48	45	40
		8:12	33.7	Non-Exposed	60	60	60	60	60	60	60	60	60	60	60	60	60	60	60	60	60	60	60	60	60	60	60	60	60	60	60	60	60	60	59	59	59	58	58	58	56	56	54	55	55	50
				Exposed	60	60	60	60	60	60	60	60	60	60	60	60	60	60	60	60	60	60	60	60	60	60	60	60	60	60	57	60	60	53	59	56	49	56	52	45	52	48	42	48	45	40
		9:12	36.9	Non-Exposed	62	62	62	62	62	62	62	62	62	62	62	62	62	62	62	62	62	62	62	62	62	62	62	62	62	62	62	62	62	62	60	60	60	59	59	58	58	58	54	57	57	50
				Exposed	62	62	62	62	62	62	62	62	62	62	62	62	62	62	62	62	62	62	62	62	62	62	62	62	62	62	57	62	60	52	60	55	49	56	51	45	52	48	42	48	45	40
		10:12	39.8	Non-Exposed	64	64	64	64	64	64	64	64	64	64	64	64	64	64	64	64	64	64	64	64	64	64	64	64	64	64	64	64	64	64	62	62	62	61	61	58	60	60	54	58	57	50
				Exposed	64	64	64	64	64	64	64	64	64	64	64	64	64	64	64	64	64	64	64	64	64	64	64	62	64	64	57	64	60	52	60	55	48	55	51	45	52	48	42	48	45	40
		11:12	42.5	Non-Exposed	66	66	66	66	66	66	66	66	66	66	66	66	66	66	66	66	66	66	66	66	66	66	66	66	66	66	66	66	66	66	64	64	62	63	63	57	61	61	54	60	57	50
				Exposed	66	66	66	66	66	66	66	66	66	66	66	66	66	66	66	66	66	66	66	66	65	66	66	62	66	65	57	65	60	52	60	55	48	55	51	45	52	48	42	48	45	40
		12:12	45	Non-Exposed	68	68	68	68	68	68	68	68	68	68	68	68	68	68	68	68	68	68	68	68	68	68	68	68	68	68	68	68	68	67	66	66	62	65	65	57	63	61	53	62	57	50
				Exposed	68	68	68	68	68	68	68	68	68	68	68	68	68	68	68	68	68	68	68	68	65	68	68	62	68	65	57	65	59	52	60	55	48	55	51	45	51	48	42	48	45	39
	C	Flat	0	Non-Exposed	63	63	63	63	63	63	63	63	63	63	63	63	63	63	63	63	63	63	63	63	60	63	63	57	63	63	52	63	58	48	63	54	44	60	50	41	56	47	39	52	44	37
				Exposed	63	63	63	63	63	62	63	63	58	63	63	55	63	63	52	63	60	49	63	57	47	63	54	44	59	49	41	55	45	38	51	42	35	47	39	33	44	37	0	41	35	0
		1:12	4.8	Non-Exposed	59	59	59	59	59	59	59	59	59	59	59	59	59	59	59	59	59	59	59	59	59	59	59	57	59	59	52	59	58	48	59	54	44	59	50	41	56	47	39	52	44	37
				Exposed	59	59	59	59	59	59	59	59	58	59	59	54	59	59	52	59	59	49	59	57	46	59	54	44	59	49	41	54	45	38	50	42	35	47	39	33	44	37	0	41	35	0
		2:12	9.5	Non-Exposed	56	56	56	56	56	56	56	56	56	56	56	56	56	56	56	56	56	56	56	56	56	56	56	53	56	54	48	56	50	44	56	46	41	53	42	39	50	40	36	47	38	34
				Exposed	56	56	56	56	56	56	56	56	54	56	56	51	56	54	48	56	51	46	56	49	43	56	46	41	53	42	38	49	39	36	45	37	33	42	34	0	40	0	0	38	0	0
		3:12	14.0	Non-Exposed	54	54	54	54	54	54	54	54	54	54	54	54	54	54	54	54	54	54	54	54	54	54	54	53	54	54	48	54	50	44	54	46	41	53	42	38	50	40	36	47	38	34
				Exposed	54	54	54	54	54	54	54	54	54	54	54	51	54	54	48	54	51	45	54	48	43	54	46	41	53	42	38	49	39	36	45	37	33	42	34	0	40	0	0	38	0	0
		4:12	18.4	Non-Exposed	54	54	54	54	54	54	54	54	54	54	54	54	54	54	54	54	54	54	54	54	54	54	54	53	54	54	48	54	50	44	54	46	41	53	42	38	50	40	36	47	38	34
				Exposed	54	54	54	54	54	54	54	54	54	54	54	51	54	54	48	54	51	45	54	48	43	54	46	41	52	42	38	49	39	36	45	36	33	42	34	0	40	0	0	38	0	0
		5:12	22.6	Non-Exposed	55	55	55	55	55	55	55	55	55	55	55	55	55	55	55	55	55	55	55	55	55	55	55	55	55	55	55	55	55	50	55	51	46	55	47	43	54	44	40	53	41	38
				Exposed	55	55	55	55	55	55	55	55	55	55	55	55	55	55	54	55	55	52	55	54	49	55	51	46	55	47	42	55	43	39	53	40	36	49	38	34	46	35	32	44	34	0
		6:12	26.6	Non-Exposed	56	56	56	56	56	56	56	56	56	56	56	56	56	56	56	56	56	56	56	56	56	56	56	56	56	56	55	56	55	50	56	51	46	56	47	43	55	44	40	54	41	37
				Exposed	56	56	56	56	56	56	56	56	56	56	56	56	56	56	54	56	56	51	56	54	49	56	51	46	56	47	42	56	43	39	53	40	36	49	38	34	46	35	0	44	34	0
		7:12	30.3	Non-Exposed	58	58	58	58	58	58	58	58	58	58	58	58	58	58	58	58	58	58	58	58	58	58	58	58	56	56	56	55	55	55	54	54	51	53	53	47	52	50	44	50	47	41
				Exposed	58	58	58	58	58	58	58	58	58	58	58	58	58	58	58	58	58	56	58	58	54	58	58	51	56	53	47	53	49	43	49	45	40	45	42	37	42	40	35	40	38	33
		8:12	33.7	Non-Exposed	60	60	60	60	60	60	60	60	60	60	60	60	60	60	60	60	60	60	60	60	60	59	59	59	58	58	58	57	57	55	55	55	51	54	54	47	53	50	44	50	47	41
				Exposed	60	60	60	60	60	60	60	60	60	60	60	60	60	60	59	60	60	56	60	60	53	59	58	51	58	53	47	53	49	43	49	45	40	45	42	37	42	40	35	40	37	33
		9:12	36.9	Non-Exposed	62	62	62	62	62	62	62	62	62	62	62	62	62	62	62	62	62	62	62	62	62	61	61	61	60	60	59	58	58	55	57	57	51	55	54	47	54	50	44	50	47	41
				Exposed	62	62	62	62	62	62	62	62	62	62	62	62	62	62	59	62	62	56	62	61	53	61	58	51	57	53	46	53	49	43	48	45	40	45	42	37	42	40	35	39	37	33
		10:12	39.8	Non-Exposed	64	64	64	64	64	64	64	64	64	64	64	64	64	64	64	64	64	64	64	64	64	63	63	63	62	62	59	60	60	55	58	58	50	57	53	47	54	50	44	50	47	41
				Exposed	64	64	64	64	64	64	64	64	64	64	64	62	64	64	59	64	64	56	64	61	53	63	58	51	57	53	46	52	49	43	48	45	40	45	42	37	42	40	35	39	37	33
		11:12	42.5	Non-Exposed	66	66	66	66	66	66	66	66	66	66	66	66	66	66	66	66	66	66	66	66	66	65	65	65	63	63	59	62	62	54	60	57	50	58	53	47	54	50	44	50	47	41
				Exposed	66	66	66	66	66	66	66	66	66	66	66	62	66	66	59	66	64	56	66	61	53	63	58	51	57	53	46	52	49	43	48	45	40	45	42	37	42	39	35	39	37	33
		12:12	45	Non-Exposed	68	68	68	68	68	68	68	68	68	68	68	68	68	68	68	68	68	68	68	68	68	67	67	65	65	65	59	64	62	54	62	57	50	58	53	47	54	50	44	50	47	41
				Exposed	68	68	68	68	68	68	68	68	65	68	68	62	68	67	59	68	63	56	66	60	53	63	58	51	57	53	46	52	49	43	48	45	40	45	42	37	42	39	35	39	37	33
	D	Flat	0	Non-Exposed	63	63	63	63	63	63	63	63	63	63	63	63	63	63	60	63	63	57	63	63	54	63	63	51	63	57	47	63	52	43	58	49	40	54	45	38	51	42	35	47	40	34
				Exposed	63	63	59	63	63	55	63	63	52	63	60	49	63	57	47	63	54	44	62	51	42	59	49	40	54	45	37	49	41	35	46	39	33	42	36	0	40	34	0	38	0	0
		1:12	4.8	Non-Exposed	59	59	59	59	59	59	59	59	59	59	59	59	59	59	59	59	59	57	59	59	54	59	59	51	59	57	47	59	52	43	58	48	40	54	45	38	50	42	35	47	40	34
				Exposed	59	59	59	59	59	55	59	59	52	59	59	49	59	56	46	59	54	44	59	51	42	59	49	40	53	45	37	49	41	35	46	38	32	42	36	0	40	34	0	38	0	0
		2:12	9.5	Non-Exposed	56	56	56	56	56	56	56	56	56	56	56	56	56	56	56	56	56	53	56	56	50	56	54	48	56	49	44	56	45	40	52	41	38	48	39	35	45	37	33	43	35	0
				Exposed	56	56	55	56	56	52	56	55	49	56	51	46	56	48	43	56	46	41	54	44	39	52	42	38	48	38	35	44	36	33	41	34	0	39	0	0	37	0	0	35	0	0
		3:12	14.0	Non-Exposed	54	54	54	54	54	54	54	54	54	54	54	54	54	54	54	54	54	53	54	54	50	54	54	48	54	49	43	54	45	40	52	41	38	48	39	35	45	37	33	43	35	0
				Exposed	54	54	54	54	54	52	54	54	48	54	51	46	54	48	43	54	46	41	54	44	39	52	41	38	48	38	35	44	36	33	41	34	0	39	0	0	37	0	0	35	0	0
		4:12	18.4	Non-Exposed	54	54	54	54	54	54	54	54	54	54	54	54	54	54	54	54	54	53	54	54	50	54	53	48	54	49	43	54	45	40	52	41	38	48	39	35	45	37	33	43	35	0
				Exposed	54	54	54	54	54	51	54	54	48	54	51	46	54	48	43	54	46	41	54	43	39	52	41	38	48	38	35	44	36	33	41	33	0	39	0	0	37	0	0	35	0	0
		5:12	22.6	Non-Exposed	55	55	55	55	55	55	55	55	55	55	55	55	55	55	55	55	55	55	55	55	55	55	54	55	54	49	55	50	45	55	46	42	54	43	39	53	40	36	50	38	34
				Exposed	55	55	55	55	55	55	55	55	55	55	55	52	55	54	49	55	51	46	55	49	44	55	46	42	55	42	38	52	39	35	48	37	33	45	35	0	42	33	0	40	0	0
		6:12	26.6	Non-Exposed	56	56	56	56	56	56	56	56	56	56	56	56	56	56	56	56	56	56	56	56	56	56	56	54	56	54	49	56	50	45	56	46	41	55	43	39	53	40	36	50	38	34
				Exposed	56	56	56	56	56	56	56	56	55	56	56	52	56	54	49	56	51	46	56	48	44	56	46	42	56	42	38	52	39	35	48	37	33	45	34	0	42	0	0	40	0	0
		7:12	30.3	Non-Exposed	58	58	58	58	58	58	58	58	58	58	58	58	58	58	58	58	58	57	57	57	56	56	56	55	55	54	54	54	50	52	52	46	51	49	43	49	45	40	45	42	38
				Exposed	58	58	58	58	58	58	58	58	58	58	58	57	58	58	54	58	58	51	57	55	48	56	53	46	52	48	42	47	44	39	44	41	36	41	39	34	38	36	0	36	34	0
		8:12	33.7	Non-Exposed	60	60	60	60	60	60	60	60	60	60	60	60	60	60	60	60	59	59	59	59	59	59	58	58	58	56	56	54	55	55	49	54	52	46	52	49	42	49	45	40	45	42	37
				Exposed	60	60	60	60	60	60	60	60	60	60	60	56	60	60	53	59	58	51	59	55	48	57	53	46	52	48	42	47	44	39	44	41	36	41	39	34	38	36	0	36	34	0
		9:12	36.9	Non-Exposed	62	62	62	62	62	62	62	62	62	62	62	62	62	62	62	62	61	61	61	60	60	60	59	58	58	54	56	56	49	55	52	46	52	48	42	49	45	40	45	42	37
				Exposed	62	62	62	62	62	62	62	62	60	62	62	56	62	61	53	61	58	51	60	55	48	57	52	46	52	48	42	47	44	39	44	41	36	41	38	34	38	36	0	36	34	0
		10:12	39.8	Non-Exposed	64	64	64	64	64	64	64	64	64	64	64	64	64	64	64	63	63	63	62	62	61	61	61	59	60	60	54	58	56	49	56	52	46	52	48	42	48	45	40	45	42	37
				Exposed	64	64	64	64	64	63	64	64	59	64	64	56	64	61	53	63	58	50	59	55	48	57	52	46	51	48	42	47	44	39	43	41	36	41	38	34	38	36	0	36	34	0
		11:12	42.5	Non-Exposed	66	66	66	66	66	66	66	66	66	66	66	66	66	66	66	65	65	64	64	64	61	63	63	58	61	61	53	60	56	49	56	52	45	52	48	42	48	45	40	45	42	37
				Exposed	66	66	66	66	66	63	66	66	59	66	64	56	66	60	53	62	57	50	59	55	48	56	52	46	51	48	42	47	44	39	43	41	36	41	38	34	38	36	0	36	34	0
		12:12	45	Non-Exposed	68	68	68	68	68	68	68	68	68	68	68	68	68	68	68	67	67	64	66	66	61	65	65	58	63	61	53	61	56	49	56	52	45	52	48	42	48	45	40	45	42	37
				Exposed	68	68	67	68	68	63	68	67	59	68	64	56	66	60	53	62	57	50	59	55	48	56	52	46	51	48	42	47	44	39	43	41	36	40	38	34	38	36	0	36	34	0

Tamarack 2.3 Rail – Gable Flush-Mount on 30 Foot Maximum Mean Roof Height – Portrait – Panel Length = 68 Inches or Less

Ground Snow Load	Exposure Category	Roof Pitch	Roof Angle	Wind Speed (mph)	95			100			105			110			115			120			125			130			140			150			160			170			180			190		
				Roof Area	1	2	3	1	2	3	1	2	3	1	2	3	1	2	3	1	2	3	1	2	3	1	2	3	1	2	3	1	2	3	1	2	3	1	2	3	1	2	3	1	2	3
35	B	Flat	0	Non-Exposed	59	59	59	59	59	59	59	59	59	59	59	59	59	59	59	59	59	59	59	59	59	59	59	59	59	59	59	59	59	59	59	59	54	59	59	50	59	57	47	59	54	44
				Exposed	59	59	59	59	59	59	59	59	59	59	59	59	59	59	59	59	59	59	59	59	58	59	59	55	59	59	50	59	56	46	59	52	42	58	48	40	54	45	37	50	42	35
		1:12	4.8	Non-Exposed	55	55	55	55	55	55	55	55	55	55	55	55	55	55	55	55	55	55	55	55	55	55	55	55	55	55	55	55	55	55	55	55	54	55	55	50	55	55	47	55	53	44
				Exposed	55	55	55	55	55	55	55	55	55	55	55	55	55	55	55	55	55	55	55	55	55	55	55	55	55	55	50	55	55	46	55	51	42	55	48	40	54	45	37	50	42	35
		2:12	9.5	Non-Exposed	52	52	52	52	52	52	52	52	52	52	52	52	52	52	52	52	52	52	52	52	52	52	52	52	52	52	52	52	52	52	52	52	51	52	52	47	52	49	44	52	46	41
				Exposed	52	52	52	52	52	52	52	52	52	52	52	52	52	52	52	52	52	52	52	52	52	52	52	51	52	52	46	52	48	43	52	44	40	51	41	37	48	39	35	45	36	33
		3:12	14.0	Non-Exposed	50	50	50	50	50	50	50	50	50	50	50	50	50	50	50	50	50	50	50	50	50	50	50	50	50	50	50	50	50	50	50	50	50	50	50	47	50	49	44	50	46	41
				Exposed	50	50	50	50	50	50	50	50	50	50	50	50	50	50	50	50	50	50	50	50	50	50	50	50	50	50	46	50	48	42	50	44	40	50	41	37	48	38	35	45	36	33
		4:12	18.4	Non-Exposed	50	50	50	50	50	50	50	50	50	50	50	50	50	50	50	50	50	50	50	50	50	50	50	50	50	50	50	50	50	50	50	50	50	50	50	47	50	49	43	50	46	41
				Exposed	50	50	50	50	50	50	50	50	50	50	50	50	50	50	50	50	50	50	50	50	50	50	50	50	50	50	46	50	47	42	50	44	40	50	41	37	48	38	35	45	36	33
		5:12	22.6	Non-Exposed	51	51	51	51	51	51	51	51	51	51	51	51	51	51	51	51	51	51	51	51	51	51	51	51	51	51	51	51	51	51	51	51	51	51	51	51	51	51	49	51	51	46
				Exposed	51	51	51	51	51	51	51	51	51	51	51	51	51	51	51	51	51	51	51	51	51	51	51	51	51	51	51	51	51	48	51	49	44	51	45	41	51	42	38	51	40	36
		6:12	26.6	Non-Exposed	53	53	53	53	53	53	53	53	53	53	53	53	53	53	53	53	53	53	53	53	53	53	53	53	53	53	53	53	53	53	53	53	53	53	53	53	53	53	49	53	51	46
				Exposed	53	53	53	53	53	53	53	53	53	53	53	53	53	53	53	53	53	53	53	53	52	53	53	48	53	49	44	53	45	41	53	42	38	53	42	38	53	42	38	53	40	36
		7:12	30.3	Non-Exposed	54	54	54	54	54	54	54	54	54	54	54	54	54	54	54	54	54	54	54	54	54	54	54	54	54	54	54	54	54	54	54	54	54	53	53	53	53	53	49	53	49	44
				Exposed	54	54	54	54	54	54	54	54	54	54	54	54	54	54	54	54	54	54	54	54	54	54	54	51	54	53	47	53	49	43	49	45	40	45	42	37	42	40	35	40	38	33
		8:12	33.7	Non-Exposed	57	57	57	57	57	57	57	57	57	57	57	57	57	57	57	57	57	57	57	57	57	56	56	56	55	55	55	54	54	54	53	53	51	52	52	47	51	50	44	49	47	41
				Exposed	57	57	57	57	57	57	57	57	57	57	57	57	57	57	57	57	57	56	57	57	53	56	56	51	55	53	47	53	49	43	49	45	40	45	42	37	42	40	35	40	37	33
		9:12	36.9	Non-Exposed	59	59	59	59	59	59	59	59	59	59	59	59	59	59	59	59	59	59	59	59	59	58	58	58	57	57	57	56	56	55	54	54	51	53	53	47	52	50	44	50	47	41
				Exposed	59	59	59	59	59	59	59	59	59	59	59	59	59	59	59	59	59	56	59	59	53	58	58	51	57	53	46	53	49	43	48	45	40	45	42	37	42	40	35	39	37	33
		10:12	39.8	Non-Exposed	61	61	61	61	61	61	61	61	61	61	61	61	61	61	61	61	61	61	61	61	61	60	60	60	59	59	59	57	57	55	56	56	50	55	53	47	53	50	44	50	47	41
				Exposed	61	61	61	61	61	61	61	61	61	61	61	61	61	61	59	61	61	56	61	61	53	60	58	51	57	53	46	52	49	43	48	45	40	45	42	37	42	40	35	39	37	33
		11:12	42.5	Non-Exposed	63	63	63	63	63	63	63	63	63	63	63	63	63	63	63	63	63	63	63	63	63	62	62	62	61	61	59	59	59	54	58	57	50	56	53	47	54	50	44	50	47	41
				Exposed	63	63	63	63	63	63	63	63	63	63	63	62	63	63	59	63	63	56	63	61	53	62	58	51	57	53	46	52	49	43	48	45	40	45	42	37	42	39	35	39	37	33
		12:12	45	Non-Exposed	66	66	66	66	66	66	66	66	66	66	66	66	66	66	66	66	66	66	65	65	65	64	64	64	63	63	59	61	61	54	60	57	50	58	53	47	54	50	44	50	47	41
				Exposed	66	66	66	66	66	66	66	66	65	66	66	62	66	66	59	66	63	56	65	60	53	63	58	51	57	53	46	52	49	43	48	45	40	45	42	37	42	39	35	39	37	33
	C	Flat	0	Non-Exposed	59	59	59	59	59	59	59	59	59	59	59	59	59	59	59	59	59	59	59	59	59	59	59	57	59	59	52	59	58	48	59	54	44	59	50	41	56	47	39	52	44	37
				Exposed	59	59	59	59	59	59	59	59	58	59	59	55	59	59	52	59	59	49	59	57	47	59	54	44	59	49	41	55	45	38	51	42	35	47	39	33	44	37	0	41	35	0
		1:12	4.8	Non-Exposed	55	55	55	55	55	55	55	55	55	55	55	55	55	55	55	55	55	55	55	55	55	55	55	55	55	55	52	55	55	48	55	54	44	55	50	41	55	47	39	52	44	37
				Exposed	55	55	55	55	55	55	55	55	55	55	55	54	55	55	52	55	55	49	55	55	46	55	54	44	55	49	41	54	45	38	50	42	35	47	39	33	44	37	0	41	35	0
		2:12	9.5	Non-Exposed	52	52	52	52	52	52	52	52	52	52	52	52	52	52	52	52	52	52	52	52	52	52	52	48	52	50	44	52	46	41	52	46	41	52	42	39	50	40	36	47	38	34
				Exposed	52	52	52	52	52	52	52	52	52	52	52	51	52	52	48	52	51	46	52	49	43	52	46	41	52	42	38	49	39	36	45	37	33	42	34	0	40	0	0	38	0	0
		3:12	14.0	Non-Exposed	50	50	50	50	50	50	50	50	50	50	50	50	50	50	50	50	50	50	50	50	50	50	50	48	50	50	44	50	46	41	50	42	38	50	40	36	47	38	34
				Exposed	50	50	50	50	50	50	50	50	50	50	50	50	50	50	48	50	50	45	50	48	43	50	46	41	50	42	38	49	39	36	45	37	33	42	34	0	40	0	0	38	0	0
		4:12	18.4	Non-Exposed	50	50	50	50	50	50	50	50	50	50	50	50	50	50	50	50	50	50	50	50	50	50	50	48	50	50	44	50	46	41	50	42	38	50	40	36	47	38	34
				Exposed	50	50	50	50	50	50	50	50	50	50	50	50	50	50	48	50	50	45	50	48	43	50	46	41	50	42	38	49	39	36	45	36	33	42	34	0	40	0	0	38	0	0
		5:12	22.6	Non-Exposed	51	51	51	51	51	51	51	51	51	51	51	51	51	51	51	51	51	51	51	51	51	51	51	51	51	51	51	51	51	50	51	51	46	51	47	43	51	44	40	51	41	38
				Exposed	51	51	51	51	51	51	51	51	51	51	51	51	51	51	51	51	51	51	51	51	49	51	51	46	51	47	42	51	43	39	51	40	36	49	38	34	46	35	32	44	34	0
		6:12	26.6	Non-Exposed	53	53	53	53	53	53	53	53	53	53	53	53	53	53	53	53	53	53	53	53	53	53	53	53	53	53	53	53	53	50	53	51	46	53	47	43	52	44	40	52	41	37
				Exposed	53	53	53	53	53	53	53	53	53	53	53	53	53	53	53	53	53	51	53	53	49	53	51	46	53	47	42	53	43	39	53	40	36	49	38	34	46	35	0	44	34	0
		7:12	30.3	Non-Exposed	54	54	54	54	54	54	54	54	54	54	54	54	54	54	54	54	54	54	54	54	54	54	54	54	54	54	54	53	53	53	52	52	51	50	50	47	49	49	44	48	47	41
				Exposed	54	54	54	54	54	54	54	54	54	54	54	54	54	54	54	54	54	54	54	54	51	54	53	47	53	49	43	49	45	40	45	42	37	42	40	35	40	38	33
		8:12	33.7	Non-Exposed	57	57	57	57	57	57	57	57	57	57	57	57	57	57	57	57	57	57	57	57	57	56	56	56	55	55	55	54	54	54	53	53	51	52	52	47	51	50	44	49	47	41
				Exposed	57	57	57	57	57	57	57	57	57	57	57	57	57	57	57	57	57	56	57	57	53	56	56	51	55	53	47	53	49	43	49	45	40	45	42	37	42	40	35	40	37	33
		9:12	36.9	Non-Exposed	59	59	59	59	59	59	59	59	59	59	59	59	59	59	59	59	59	59	59	59	59	58	58	58	57	57	57	56	56	55	54	54	51	53	53	47	52	50	44	50	47	41
				Exposed	59	59	59	59	59	59	59	59	59	59	59	59	59	59	59	59	59	56	59	59	53	58	58	51	57	53	46	53	49	43	48	45	40	45	42	37	42	40	35	39	37	33
		10:12	39.8	Non-Exposed	61	61	61	61	61	61	61	61	61	61	61	61	61	61	61	61	61	61	61	61	61	60	60	60	59	59	59	57	57	55	56	56	50	55	53	47	53	50	44	50	47	41
				Exposed	61	61	61	61	61	61	61	61	61	61	61	61	61	61	59	61	61	56	61	61	53	60	58	51	57	53	46	52	49	43	48	45	40	45	42	37	42	40	35	39	37	33
		11:12	42.5	Non-Exposed	63	63	63	63	63	63	63	63	63	63	63	63	63	63	63	63	63	63	63	63	63	62	62	62	61	61	59	59	59	54	58	57	50	56	53	47	54	50	44	50	47	41
				Exposed	63	63	63	63	63	63	63	63	63	63	63	62	63	63	59	63	63	56	63	61	53	62	58	51	57	53	46	52	49	43	48	45	40	45	42	37	42	39	35	39	37	33
		12:12	45	Non-Exposed	66	66	66	66	66	66	66	66	66	66	66	66	66	66	66	66	66	66	65	65	65	64	64	64	63	63	59	61	61	54	60	57	50	58	53	47	54	50	44	50	47	41
				Exposed	66	66	66	66	66	66	66	66	65	66	66	62	66	66	59	66	63	56	65	60	53	63	58	51	57	53	46	52	49	43	48	45	40	45	42	37	42	39	35	39	37	33
	D	Flat	0	Non-Exposed	59	59	59	59	59	59	59	59	59	59	59	59	59	59	59	59	59	57	59	59	54	59	59	51	59	57	47	59	52	43	58	49	40	54	45	38	51	42	35	47	40	34
				Exposed	59	59	59	59	59	55	59	59	52	59	59	49	59	57	47	59	54	44	59	51	42	59	49	40	54	45	37	49	41	35	46	39	33	42	36	0	40	34	0	38	0	0
		1:12	4.8	Non-Exposed	55	55	55	55	55	55	55	55	55	55	55	55	55	55	55	55	55	55	55	55	54	55	55	51	55	55	47	55	52	43	55	48	40	54	45	38	50	42	35	47	40	34
				Exposed	55	55	55	55	55	55	55	55	52	55	55	49	55	55	46	55	54	44	55	51	42	55	49	40	53	45	37	49	41	35	46	38	32	42	36	0	40	34	0	38	0	0
		2:12	9.5	Non-Exposed	52	52	52	52	52	52	52	52	52	52	52	52	52	52	52	52	52	52	52	52	50	52	52	48	52	49	44	52	45	40	52	41	38	48	39	35	45	37	33	43	35	0
				Exposed	52	52	52	52	52	52	52	52	49	52	51	46	52	48	43	52	46	41	52	44	39	52	42	38	48	38	35	44	36	33	41	34	0	39	0	0	37	0	0	35	0	0
		3:12	14.0	Non-Exposed	50	50	50	50	50	50	50	50	50	50	50	50	50	50	50	50	50	50	50	50	50	50	50	48	50	49	43	50	45	40	50	41	38	48	39	35	45	37	33	43	35	0
				Exposed	50	50	50	50	50	50	50	48	50	50	50	46	50	48	43	50	46	41	50	44	39	50	41	38	48	38	35	44	36	33	41	34	0	39	0	0	37	0	0	35	0	0
		4:12	18.4	Non-Exposed	50	50	50	50	50	50	50	50	50	50	50	50	50	50	50	50	50	50	50	50	50	50	50	48	50	49	43	50	45	40	50	41	38	48	39	35	45	37	33	43	35	0
				Exposed	50	50	50	50	50	50	50	48	50	50	46	50	48	43	50	46	41	50	43	39	50	41	38	48	38	35	44	36	33	41	33	0	39	0	0	37	0	0	35	0	0
		5:12	22.6	Non-Exposed	51	51	51	51	51	51	51	51	51	51	51	51	51	51	51	51	51	51	51	51	51	51	51	51	51	51	49	51	50	45	51	46	42	51	43	39	50	40	36	49	38	34
				Exposed	51	51	51	51	51	51	51	51	51	51	51	51	51	51	49	51	51	46	51	49	44	51	46	42	51	42	38	51	39	35	48	37	33	45	35	0	42	33	0	40	0	0
		6:12	26.6	Non-Exposed	53	53	53	53	53	53	53	53	53	53	53	53	53	53	53	53	53	53	53	53	53	53	53	53	53	53	49	53	50	45	53	46	41	52	43	39	51	40	36	50	38	34
				Exposed	53	53	53	53	53	53	53	53	53	53	53	52	53	53	49	53	51	46	53	48	44	53	46	42	53	42	38	52	39	35	48	37	33	45	34	0	42	0	0	40	0	0
		7:12	30.3	Non-Exposed	54	54	54	54	54	54	54	54	54	54	54	54	54	54	54	54	54	54	54	54	54	54	54	52	52	52	51	51	50	50	50	46	49	49	43	48	45	40	45	42	38
				Exposed	54	54	54	54	54	54	54	54	54	54	54	54	54	54	54	54	54	51	54	54	48	54	53	46	52	48	42	47	44	39	44	41	36	41	39	34	38	36	0	36	34	0
		8:12	33.7	Non-Exposed	57	57	57	57	57	57	57	57	57	57	57	57	57	57	57	56	56	56	56	56	56	55	55	55	54	54	54	53	53	49	51	51	46	50	49	42	49	45	40	45	42	37
				Exposed	57	57	57	57	57	57	57	57	57	57	56	57	57	53	56	56	51	56	55	48	55	53	46	52	48	42	47	44	39	44	41	36	41	39	34	38	36	0	36	34	0
		9:12	36.9	Non-Exposed	59	59	59	59	59	59	59	59	59	59	59	59	59	59	59	58	58	58	57	57	57	57	57	57	55	55	54	54	54	49	53	52	46	51	48	42	49	45	40	45	42	37
				Exposed	59	59	59	59	59	59	59	59	59	59	56	59	59	53	58	58	51	57	55	48	57	52	46	52	48	42	47	44	39	44	41	36	41	38	34	38	36	0	36	34	0
		10:12	39.8	Non-Exposed	61	61	61	61	61	61	61	61	61	61	61	61	61	61	61	60	60	60	59	59	59	59	59	59	57	57	54	56	56	49	54	52	46	52	48	42	48	45	40	45	42	37
				Exposed	61	61	61	61	61	61	61	61	59	61	61	56	61	61	53	60	58	50	59	55	48	57	52	46	51	48	42	47	44	39	43	41	36	41	38	34	38	36	0	36	34	0
		11:12	42.5	Non-Exposed	63	63	63	63	63	63	63	63	63	63	63	63	63	63	63	62	62	62	61	61	61	61	61	58	59	59	53	57	56	49	56	52	45	52	48	42	48	45	40	45	42	37
				Exposed	63	63	63	63	63	63	63	63	59	63	63	56	63	60	53	62	57	50	59	55	48	56	52	46	51	48	42	47	44	39	43	41	36	41	38	34	38	36	0	36	34	0
		12:12	45	Non-Exposed	66	66	66	66	66	66	66	66	66	66	66	66	65	65	65	64	64	64	63	63	61	63	63	58	61	61	53	59	56	49	56	52	45	52	48	42	48	45	40	45	42	37
				Exposed	66	66	66	66	66	63	66	66	59	66	64	56	65	60	53	62	57	50	59	55	48	56	52	46	51	48	42	47	44	39	43	41	36	40	38	34	38	36	0	36	34	0

Tamarack 2.3 Rail – Gable Flush-Mount on 30 Foot Maximum Mean Roof Height – Portrait – Panel Length = 68 Inches or Less

Ground Snow Load	Exposure Category	Roof Pitch	Roof Angle	Wind Speed (mph)	95			100			105			110			115			120			125			130			140			150			160			170			180			190		
				Roof Area	1	2	3	1	2	3	1	2	3	1	2	3	1	2	3	1	2	3	1	2	3	1	2	3	1	2	3	1	2	3	1	2	3	1	2	3	1	2	3	1	2	3
40	B	Flat	0	Non-Exposed	56	56	56	56	56	56	56	56	56	56	56	56	56	56	56	56	56	56	56	56	56	56	56	56	56	56	56	56	56	56	56	56	54	56	56	50	56	56	47	56	54	44
				Exposed	56	56	56	56	56	56	56	56	56	56	56	56	56	56	56	56	56	56	56	56	56	56	56	55	56	56	50	56	56	46	56	52	42	56	48	40	54	45	37	50	42	35
		1:12	4.8	Non-Exposed	52	52	52	52	52	52	52	52	52	52	52	52	52	52	52	52	52	52	52	52	52	52	52	52	52	52	52	52	52	52	52	52	52	52	52	50	52	52	47	52	52	44
				Exposed	52	52	52	52	52	52	52	52	52	52	52	52	52	52	52	52	52	52	52	52	52	52	52	52	52	52	50	52	52	46	52	51	42	52	48	40	52	45	37	50	42	35
		2:12	9.5	Non-Exposed	49	49	49	49	49	49	49	49	49	49	49	49	49	49	49	49	49	49	49	49	49	49	49	49	49	49	49	49	49	49	49	49	49	49	49	47	49	49	44	49	46	41
				Exposed	49	49	49	49	49	49	49	49	49	49	49	49	49	49	49	49	49	49	49	49	49	49	49	49	49	49	46	49	48	43	49	44	40	49	41	37	48	39	35	45	36	33
		3:12	14.0	Non-Exposed	47	47	47	47	47	47	47	47	47	47	47	47	47	47	47	47	47	47	47	47	47	47	47	47	47	47	47	47	47	47	47	47	47	47	47	47	47	47	44	47	46	41
				Exposed	47	47	47	47	47	47	47	47	47	47	47	47	47	47	47	47	47	47	47	47	47	47	47	47	47	47	46	47	47	42	47	44	40	47	41	37	47	38	35	45	36	33
		4:12	18.4	Non-Exposed	47	47	47	47	47	47	47	47	47	47	47	47	47	47	47	47	47	47	47	47	47	47	47	47	47	47	47	47	47	47	47	47	47	47	47	47	47	47	43	47	46	41
				Exposed	47	47	47	47	47	47	47	47	47	47	47	47	47	47	47	47	47	47	47	47	47	47	47	47	47	47	46	47	47	42	47	44	39	47	41	37	47	38	35	45	36	33
		5:12	22.6	Non-Exposed	48	48	48	48	48	48	48	48	48	48	48	48	48	48	48	48	48	48	48	48	48	48	48	48	48	48	48	48	48	48	48	48	48	48	48	48	48	48	48	48	48	46
				Exposed	48	48	48	48	48	48	48	48	48	48	48	48	48	48	48	48	48	48	48	48	48	48	48	48	48	48	48	48	48	48	48	48	44	48	45	41	48	42	38	48	40	36
		6:12	26.6	Non-Exposed	50	50	50	50	50	50	50	50	50	50	50	50	50	50	50	50	50	50	50	50	50	50	50	50	50	50	50	50	50	50	50	50	49	50	50	50	50	50	49	50	50	46
				Exposed	50	50	50	50	50	50	50	50	50	50	50	50	50	50	50	50	50	50	50	50	50	50	50	50	50	50	50	50	50	48	50	49	44	50	45	41	50	42	38	50	40	36
		7:12	30.3	Non-Exposed	51	51	51	51	51	51	51	51	51	51	51	51	51	51	51	51	51	51	51	51	51	51	51	51	51	51	51	51	51	51	51	51	51	51	51	51	50	50	50	49	49	49
				Exposed	51	51	51	51	51	51	51	51	51	51	51	51	51	51	51	51	51	51	51	51	51	51	51	51	51	51	51	51	51	51	51	51	49	51	51	45	50	48	42	48	45	40
		8:12	33.7	Non-Exposed	53	53	53	53	53	53	53	53	53	53	53	53	53	53	53	53	53	53	53	53	53	53	53	53	53	53	53	53	53	53	53	53	53	53	53	53	52	52	52	51	51	50
				Exposed	53	53	53	53	53	53	53	53	53	53	53	53	53	53	53	53	53	53	53	53	53	53	53	53	53	53	53	53	53	53	53	53	49	53	52	45	52	48	42	48	45	40
		9:12	36.9	Non-Exposed	56	56	56	56	56	56	56	56	56	56	56	56	56	56	56	56	56	56	56	56	56	56	56	56	56	56	56	56	56	56	55	55	55	54	54	54	53	53	53	52	52	50
				Exposed	56	56	56	56	56	56	56	56	56	56	56	56	56	56	56	56	56	56	56	56	56	56	56	56	56	56	56	56	56	52	55	55	49	54	51	45	52	48	42	48	45	40
		10:12	39.8	Non-Exposed	59	59	59	59	59	59	59	59	59	59	59	59	59	59	59	59	59	59	59	59	59	59	59	59	59	59	59	58	58	58	57	57	57	56	56	56	55	55	54	54	54	50
				Exposed	59	59	59	59	59	59	59	59	59	59	59	59	59	59	59	59	59	59	59	59	59	59	59	59	59	59	57	58	58	52	57	55	48	55	51	45	52	48	42	48	45	40
		11:12	42.5	Non-Exposed	61	61	61	61	61	61	61	61	61	61	61	61	61	61	61	61	61	61	61	61	61	61	61	61	61	61	61	60	60	60	59	59	59	58	58	57	57	57	54	56	56	50
				Exposed	61	61	61	61	61	61	61	61	61	61	61	61	61	61	61	61	61	61	61	61	61	61	61	61	61	61	57	60	60	52	59	55	48	55	51	45	52	48	42	48	45	40
		12:12	45	Non-Exposed	63	63	63	63	63	63	63	63	63	63	63	63	63	63	63	63	63	63	63	63	63	63	63	63	63	63	63	62	62	62	61	61	61	60	60	57	59	59	53	58	57	50
				Exposed	63	63	63	63	63	63	63	63	63	63	63	63	63	63	63	63	63	63	63	63	63	63	63	62	63	63	57	62	59	52	60	55	48	55	51	45	51	48	42	48	45	39
	C	Flat	0	Non-Exposed	56	56	56	56	56	56	56	56	56	56	56	56	56	56	56	56	56	56	56	56	56	56	56	56	56	56	52	56	56	48	56	54	44	56	50	41	56	47	39	52	44	37
				Exposed	56	56	56	56	56	56	56	56	56	56	56	55	56	56	52	56	56	49	56	56	47	56	54	44	56	49	41	55	45	38	51	42	35	47	39	33	44	37	0	41	35	0
		1:12	4.8	Non-Exposed	52	52	52	52	52	52	52	52	52	52	52	52	52	52	52	52	52	52	52	52	52	52	52	52	52	52	52	52	52	48	52	52	44	52	50	41	52	47	39	52	44	37
				Exposed	52	52	52	52	52	52	52	52	52	52	52	52	52	52	52	52	52	49	52	52	46	52	52	44	52	49	41	52	45	38	50	42	35	47	39	33	44	37	0	41	35	0
		2:12	9.5	Non-Exposed	49	49	49	49	49	49	49	49	49	49	49	49	49	49	49	49	49	49	49	49	49	49	49	49	49	49	48	49	49	44	49	46	41	49	42	39	49	40	36	47	38	34
				Exposed	49	49	49	49	49	49	49	49	49	49	49	49	49	49	48	49	49	46	49	49	43	49	46	41	49	42	38	49	39	36	45	37	33	42	34	0	40	0	0	38	0	0
		3:12	14.0	Non-Exposed	47	47	47	47	47	47	47	47	47	47	47	47	47	47	47	47	47	47	47	47	47	47	47	47	47	47	47	47	47	44	47	46	41	47	42	38	47	40	36	47	38	34
				Exposed	47	47	47	47	47	47	47	47	47	47	47	47	47	47	47	47	47	45	47	47	43	47	46	41	47	42	38	47	39	36	45	37	33	42	34	0	40	0	0	38	0	0
		4:12	18.4	Non-Exposed	47	47	47	47	47	47	47	47	47	47	47	47	47	47	47	47	47	47	47	47	47	47	47	47	47	47	47	47	47	44	47	46	41	47	42	38	47	40	36	47	38	34
				Exposed	47	47	47	47	47	47	47	47	47	47	47	47	47	47	47	47	47	45	47	47	43	47	46	41	47	42	38	47	39	36	45	36	33	42	34	0	40	0	0	38	0	0
		5:12	22.6	Non-Exposed	48	48	48	48	48	48	48	48	48	48	48	48	48	48	48	48	48	48	48	48	48	48	48	48	48	48	48	48	48	46	48	48	46	48	47	43	48	44	40	48	41	38
				Exposed	48	48	48	48	48	48	48	48	48	48	48	48	48	48	48	48	48	48	48	48	48	48	48	46	48	47	42	48	43	39	48	40	36	48	38	34	46	35	32	44	34	0
		6:12	26.6	Non-Exposed	50	50	50	50	50	50	50	50	50	50	50	50	50	50	50	50	50	50	50	50	50	50	50	50	50	50	50	50	50	50	50	50	46	50	47	43	50	44	40	49	41	37
				Exposed	50	50	50	50	50	50	50	50	50	50	50	50	50	50	50	50	50	50	50	50	49	50	50	46	50	47	42	50	43	39	50	40	36	49	38	34	46	35	0	44	34	0
		7:12	30.3	Non-Exposed	51	51	51	51	51	51	51	51	51	51	51	51	51	51	51	51	51	51	51	51	51	51	51	51	51	51	51	50	50	50	49	49	49	48	48	47	47	47	44	46	46	41
				Exposed	51	51	51	51	51	51	51	51	51	51	51	51	51	51	51	51	51	51	51	51	51	51	51	51	51	51	47	50	49	43	49	45	40	45	42	37	42	40	35	40	38	33
		8:12	33.7	Non-Exposed	53	53	53	53	53	53	53	53	53	53	53	53	53	53	53	53	53	53	53	53	53	53	53	53	53	53	53	52	52	52	51	51	51	50	50	47	49	49	44	48	47	41
				Exposed	53	53	53	53	53	53	53	53	53	53	53	53	53	53	53	53	53	53	53	53	53	53	53	51	53	53	47	52	49	43	49	45	40	45	42	37	42	40	35	40	37	33
		9:12	36.9	Non-Exposed	56	56	56	56	56	56	56	56	56	56	56	56	56	56	56	56	56	56	56	56	56	56	56	56	55	55	55	54	54	54	52	52	51	51	51	47	50	50	44	49	47	41
				Exposed	56	56	56	56	56	56	56	56	56	56	56	56	56	56	56	56	56	56	56	56	53	56	56	51	55	53	46	53	49	43	48	45	40	45	42	37	42	40	35	39	37	33
		10:12	39.8	Non-Exposed	59	59	59	59	59	59	59	59	59	59	59	59	59	59	59	59	59	59	58	58	58	58	58	58	56	56	56	55	55	55	54	54	50	53	53	47	52	50	44	50	47	41
				Exposed	59	59	59	59	59	59	59	59	59	59	59	59	59	59	59	59	59	56	58	58	53	58	58	51	56	53	46	52	49	43	48	45	40	45	42	37	42	40	35	39	37	33
		11:12	42.5	Non-Exposed	61	61	61	61	61	61	61	61	61	61	61	61	61	61	61	61	61	61	60	60	60	60	60	60	58	58	58	57	57	54	56	56	50	54	53	47	53	50	44	50	47	41
				Exposed	61	61	61	61	61	61	61	61	61	61	61	61	61	61	59	61	61	56	60	60	53	60	58	51	57	53	46	52	49	43	48	45	40	45	42	37	42	39	35	39	37	33
		12:12	45	Non-Exposed	63	63	63	63	63	63	63	63	63	63	63	63	63	63	63	63	63	63	63	63	63	62	62	62	61	61	59	59	59	54	58	57	50	56	53	47	54	50	44	50	47	41
				Exposed	63	63	63	63	63	63	63	63	63	63	63	62	63	63	59	63	63	56	63	60	53	62	58	51	57	53	46	52	49	43	48	45	40	45	42	37	42	39	35	39	37	33
	D	Flat	0	Non-Exposed	56	56	56	56	56	56	56	56	56	56	56	56	56	56	56	56	56	56	56	56	54	56	56	51	56	56	47	56	52	43	56	49	40	54	45	38	51	42	35	47	40	34
				Exposed	56	56	56	56	56	55	56	56	52	56	56	49	56	56	47	56	54	44	56	51	42	56	49	40	54	45	37	49	41	35	46	39	33	42	36	0	40	34	0	38	0	0
		1:12	4.8	Non-Exposed	52	52	52	52	52	52	52	52	52	52	52	52	52	52	52	52	52	52	52	52	51	52	52	47	52	52	43	52	48	40	52	45	38	50	42	35	47	40	34
				Exposed	52	52	52	52	52	52	52	52	52	52	52	49	52	52	46	52	52	44	52	51	42	52	49	40	52	45	37	49	41	35	46	38	32	42	36	0	40	34	0	38	0	0
		2:12	9.5	Non-Exposed	49	49	49	49	49	49	49	49	49	49	49	49	49	49	49	49	49	49	49	49	49	49	49	48	49	49	44	49	45	40	49	41	38	48	39	35	45	37	33	43	35	0
				Exposed	49	49	49	49	49	49	49	49	49	49	49	46	49	48	43	49	46	41	49	44	39	49	42	38	48	38	35	44	36	33	41	34	0	39	0	0	37	0	0	35	0	0
		3:12	14.0	Non-Exposed	47	47	47	47	47	47	47	47	47	47	47	47	47	47	47	47	47	47	47	47	47	47	47	47	47	47	43	47	45	40	47	41	38	47	39	35	45	37	33	43	35	0
				Exposed	47	47	47	47	47	47	47	47	47	47	47	46	47	47	43	47	46	41	47	44	39	47	41	38	47	38	35	44	36	33	41	34	0	39	0	0	37	0	0	35	0	0
		4:12	18.4	Non-Exposed	47	47	47	47	47	47	47	47	47	47	47	47	47	47	47	47	47	47	47	47	47	47	47	47	47	47	43	47	45	40	47	41	38	47	39	35	45	37	33	43	35	0
				Exposed	47	47	47	47	47	47	47	47	47	47	47	46	47	47	43	47	46	41	47	43	39	47	41	38	47	38	35	44	36	33	41	33	0	39	0	0	37	0	0	35	0	0
		5:12	22.6	Non-Exposed	48	48	48	48	48	48	48	48	48	48	48	48	48	48	48	48	48	48	48	48	48	48	48	48	48	48	48	48	48	45	48	46	42	48	43	39	48	40	36	47	38	34
				Exposed	48	48	48	48	48	48	48	48	48	48	48	48	48	48	48	48	48	46	48	48	44	48	46	42	48	42	38	48	39	35	48	37	33	45	35	0	42	33	0	40	0	0
		6:12	26.6	Non-Exposed	50	50	50	50	50	50	50	50	50	50	50	50	50	50	50	50	50	50	50	50	50	50	50	50	50	50	49	50	50	45	50	46	41	50	43	39	49	40	36	48	38	34
				Exposed	50	50	50	50	50	50	50	50	50	50	50	50	50	50	49	50	50	46	50	48	44	50	46	42	50	42	38	50	39	35	48	37	33	45	34	0	42	0	0	40	0	0
		7:12	30.3	Non-Exposed	51	51	51	51	51	51	51	51	51	51	51	51	51	51	51	51	51	51	51	51	51	51	51	50	50	50	49	49	49	48	48	46	47	47	43	46	45	40	45	42	38
				Exposed	51	51	51	51	51	51	51	51	51	51	51	51	51	51	51	51	51	51	51	51	48	51	51	46	50	48	42	47	44	39	44	41	36	41	39	34	38	36	0	36	34	0
		8:12	33.7	Non-Exposed	53	53	53	53	53	53	53	53	53	53	53	53	53	53	53	53	53	53	53	53	53	53	53	53	52	52	52	50	50	49	49	49	46	48	48	42	47	45	40	45	42	37
				Exposed	53	53	53	53	53	53	53	53	53	53	53	53	53	53	53	53	53	51	53	53	48	53	53	46	52	48	42	47	44	39	44	41	36	41	39	34	38	36	0	36	34	0
		9:12	36.9	Non-Exposed	56	56	56	56	56	56	56	56	56	56	56	56	56	56	56	56	56	56	55	55	55	54	54	54	53	53	53	52	52	49	51	51	46	50	48	42	48	45	40	45	42	37
				Exposed	56	56	56	56	56	56	56	56	56	56	56	56	56	56	53	56	56	51	55	55	48	54	52	46	52	48	42	47	44	39	44	41	36	41	38	34	38	36	0	36	34	0
		10:12	39.8	Non-Exposed	59	59	59	59	59	59	59	59	59	59	59	59	58	58	58	58	58	58	57	57	57	56	56	56	55	55	54	54	54	49	52	52	46	51	48	42	48	45	40	45	42	37
				Exposed	59	59	59	59	59	59	59	59	59	59	59	56	58	58	53	58	58	50	57	55	48	56	52	46	51	48	42	47	44	39	43	41	36	41	38	34	38	36	0	36	34	0
		11:12	42.5	Non-Exposed	61	61	61	61	61	61	61	61	61	61	61	61	60	60	60	60	60	60	59	59	59	58	58	58	57	57	53	55	55	49	54	52	45	52	48	42	48	45	40	45	42	37
				Exposed	61	61	61	61	61	61	61	59	61	61	56	60	60	53	60	57	50	59	55	48	56	52	46	51	48	42	47	44	39	43	41	36	41	38	34	38	36	0	36	34	0
		12:12	45	Non-Exposed	63	63	63	63	63	63	63	63	63	63	63	63	63	63	63	62	62	62	61	61	61	60	60	58	59	59	53	57	56	49	56	52	45	52	48	42	48	45	40	45	42	37
				Exposed	63	63	63	63	63	63	63	63	59	63	63	56	63	60	53	62	57	50	59	55	48	56	52	46	51	48	42	47	44	39	43	41	36	40	38	34	38	36	0	36	34	0

Tamarack 2.3 Rail – Gable Flush-Mount on 30 Foot Maximum Mean Roof Height – Portrait – Panel Length = 68 Inches or Less

Ground Snow Load	Exposure Category	Roof Pitch	Roof Angle	Wind Speed (mph)	95			100			105			110			115			120			125			130			140			150			160			170			180			190		
				Roof Area	1	2	3	1	2	3	1	2	3	1	2	3	1	2	3	1	2	3	1	2	3	1	2	3	1	2	3	1	2	3	1	2	3	1	2	3	1	2	3	1	2	3
45	B	Flat	0	Non-Exposed	53	53	53	53	53	53	53	53	53	53	53	53	53	53	53	53	53	53	53	53	53	53	53	53	53	53	53	53	53	53	53	53	53	53	53	50	53	53	47	53	53	44
				Exposed	53	53	53	53	53	53	53	53	53	53	53	53	53	53	53	53	53	53	53	53	53	53	53	53	53	53	50	53	53	46	53	52	42	53	48	40	53	45	37	50	42	35
		1:12	4.8	Non-Exposed	49	49	49	49	49	49	49	49	49	49	49	49	49	49	49	49	49	49	49	49	49	49	49	49	49	49	49	49	49	49	49	49	49	49	49	49	49	49	47	49	49	44
				Exposed	49	49	49	49	49	49	49	49	49	49	49	49	49	49	49	49	49	49	49	49	49	49	49	49	49	49	49	49	49	46	49	49	42	49	48	40	49	45	37	49	42	35
		2:12	9.5	Non-Exposed	46	46	46	46	46	46	46	46	46	46	46	46	46	46	46	46	46	46	46	46	46	46	46	46	46	46	46	46	46	46	46	46	46	46	46	46	46	46	44	46	46	41
				Exposed	46	46	46	46	46	46	46	46	46	46	46	46	46	46	46	46	46	46	46	46	46	46	46	46	46	46	46	46	46	43	46	44	40	46	41	37	46	39	35	45	36	33
		3:12	14.0	Non-Exposed	45	45	45	45	45	45	45	45	45	45	45	45	45	45	45	45	45	45	45	45	45	45	45	45	45	45	45	45	45	45	45	45	45	45	45	45	45	45	44	45	45	41
				Exposed	45	45	45	45	45	45	45	45	45	45	45	45	45	45	45	45	45	45	45	45	45	45	45	45	45	45	45	45	45	42	45	44	40	45	41	37	45	38	35	45	36	33
		4:12	18.4	Non-Exposed	45	45	45	45	45	45	45	45	45	45	45	45	45	45	45	45	45	45	45	45	45	45	45	45	45	45	45	45	45	45	45	45	45	45	45	45	45	45	43	45	45	41
				Exposed	45	45	45	45	45	45	45	45	45	45	45	45	45	45	45	45	45	45	45	45	45	45	45	45	45	45	45	45	45	42	45	44	39	45	41	37	45	38	35	45	36	33
		5:12	22.6	Non-Exposed	46	46	46	46	46	46	46	46	46	46	46	46	46	46	46	46	46	46	46	46	46	46	46	46	46	46	46	46	46	46	46	46	46	46	46	46	46	46	46	46	46	46
				Exposed	46	46	46	46	46	46	46	46	46	46	46	46	46	46	46	46	46	46	46	46	46	46	46	46	46	46	46	46	46	44	46	45	41	46	42	38	46	40	36	46	40	36
		6:12	26.6	Non-Exposed	47	47	47	47	47	47	47	47	47	47	47	47	47	47	47	47	47	47	47	47	47	47	47	47	47	47	47	47	47	47	47	47	47	47	47	47	47	47	47	47	47	46
				Exposed	47	47	47	47	47	47	47	47	47	47	47	47	47	47	47	47	47	47	47	47	47	47	47	47	47	47	47	47	47	44	47	45	41	47	42	38	47	40	36	47	40	36
		7:12	30.3	Non-Exposed	49	49	49	49	49	49	49	49	49	49	49	49	49	49	49	49	49	49	49	49	49	49	49	49	49	49	49	49	49	49	49	49	49	49	49	49	49	49	49	49	49	49
				Exposed	49	49	49	49	49	49	49	49	49	49	49	49	49	49	49	49	49	49	49	49	49	49	49	49	49	49	49	49	49	49	48	48	43	48	48	43	48	42	37	48	42	33
		8:12	33.7	Non-Exposed	51	51	51	51	51	51	51	51	51	51	51	51	51	51	51	51	51	51	51	51	51	51	51	51	51	51	51	51	51	51	50	50	50	50	50	50	50	50	50	50	50	49
				Exposed	51	51	51	51	51	51	51	51	51	51	51	51	51	51	51	51	51	51	51	51	51	51	51	51	51	51	51	51	51	49	50	50	45	50	48	42	48	45	40	48	45	40
		9:12	36.9	Non-Exposed	53	53	53	53	53	53	53	53	53	53	53	53	53	53	53	53	53	53	53	53	53	53	53	53	53	53	53	53	53	53	53	53	53	52	52	52	51	51	51	50	50	50
				Exposed	53	53	53	53	53	53	53	53	53	53	53	53	53	53	53	53	53	53	53	53	53	53	53	53	53	53	53	53	53	52	53	53	49	52	51	45	51	48	42	48	45	40
		10:12	39.8	Non-Exposed	56	56	56	56	56	56	56	56	56	56	56	56	56	56	56	56	56	56	56	56	56	56	56	56	56	56	56	56	56	56	55	55	55	54	54	54	53	53	53	52	52	50
				Exposed	56	56	56	56	56	56	56	56	56	56	56	56	56	56	56	56	56	56	56	56	56	56	56	56	56	56	56	56	56	52	55	55	48	54	51	45	52	48	42	48	45	40
		11:12	42.5	Non-Exposed	58	58	58	58	58	58	58	58	58	58	58	58	58	58	58	58	58	58	58	58	58	58	58	58	58	58	58	58	58	58	57	57	57	56	56	56	55	55	54	54	54	50
				Exposed	58	58	58	58	58	58	58	58	58	58	58	58	58	58	58	58	58	58	58	58	58	58	58	58	58	58	57	58	58	52	57	55	48	55	51	45	52	48	42	48	45	40
		12:12	45	Non-Exposed	61	61	61	61	61	61	61	61	61	61	61	61	61	61	61	61	61	61	61	61	61	61	61	61	61	61	61	60	60	60	59	59	59	58	58	57	57	57	53	56	56	50
				Exposed	61	61	61	61	61	61	61	61	61	61	61	61	61	61	61	61	61	61	61	61	61	61	61	61	61	61	57	60	59	52	59	55	48	55	51	45	51	48	42	48	45	39
	C	Flat	0	Non-Exposed	53	53	53	53	53	53	53	53	53	53	53	53	53	53	53	53	53	53	53	53	53	53	53	53	53	53	52	53	53	48	53	53	44	53	50	41	53	47	39	52	44	37
				Exposed	53	53	53	53	53	53	53	53	53	53	53	53	53	53	52	53	53	49	53	53	47	53	53	44	53	49	41	53	45	38	51	42	35	47	39	33	44	37	0	41	35	0
		1:12	4.8	Non-Exposed	49	49	49	49	49	49	49	49	49	49	49	49	49	49	49	49	49	49	49	49	49	49	49	49	49	49	49	49	49	48	49	49	44	49	49	41	49	47	39	49	44	37
				Exposed	49	49	49	49	49	49	49	49	49	49	49	49	49	49	49	49	49	49	49	49	46	49	49	44	49	49	41	49	45	38	49	42	35	47	39	33	44	37	0	41	35	0
		2:12	9.5	Non-Exposed	46	46	46	46	46	46	46	46	46	46	46	46	46	46	46	46	46	46	46	46	46	46	46	46	46	46	46	46	46	44	46	46	41	46	42	39	46	40	36	46	38	34
				Exposed	46	46	46	46	46	46	46	46	46	46	46	46	46	46	46	46	46	46	46	46	43	46	46	41	46	42	38	46	39	36	45	37	33	42	34	0	40	0	0	38	0	0
		3:12	14.0	Non-Exposed	45	45	45	45	45	45	45	45	45	45	45	45	45	45	45	45	45	45	45	45	45	45	45	45	45	45	45	45	45	44	45	45	41	45	42	38	45	40	36	45	38	34
				Exposed	45	45	45	45	45	45	45	45	45	45	45	45	45	45	45	45	45	45	45	45	43	45	45	41	45	42	38	45	39	36	45	37	33	42	34	0	40	0	0	38	0	0
		4:12	18.4	Non-Exposed	45	45	45	45	45	45	45	45	45	45	45	45	45	45	45	45	45	45	45	45	45	45	45	45	45	45	45	45	45	44	45	45	41	45	42	38	45	40	36	45	38	34
				Exposed	45	45	45	45	45	45	45	45	45	45	45	45	45	45	45	45	45	45	45	45	43	45	45	41	45	42	38	45	39	36	45	36	33	42	34	0	40	0	0	38	0	0
		5:12	22.6	Non-Exposed	46	46	46	46	46	46	46	46	46	46	46	46	46	46	46	46	46	46	46	46	46	46	46	46	46	46	46	46	46	46	46	46	46	46	46	43	46	44	40	46	41	38
				Exposed	46	46	46	46	46	46	46	46	46	46	46	46	46	46	46	46	46	46	46	46	46	46	46	46	46	46	42	46	43	39	46	40	36	46	38	34	46	35	32	44	34	0
		6:12	26.6	Non-Exposed	47	47	47	47	47	47	47	47	47	47	47	47	47	47	47	47	47	47	47	47	47	47	47	47	47	47	47	47	47	47	47	47	46	47	47	43	47	44	40	47	41	37
				Exposed	47	47	47	47	47	47	47	47	47	47	47	47	47	47	47	47	47	47	47	47	47	47	47	46	47	47	42	47	43	39	47	40	36	47	38	34	46	35	0	44	34	0
		7:12	30.3	Non-Exposed	49	49	49	49	49	49	49	49	49	49	49	49	49	49	49	49	49	49	49	49	49	49	49	49	49	49	49	48	48	48	47	47	47	47	47	47	46	46	44	45	45	41
				Exposed	49	49	49	49	49	49	49	49	49	49	49	49	49	49	49	49	49	49	49	49	49	49	49	47	48	48	43	47	45	40	45	42	37	42	40	35	40	38	33			
		8:12	33.7	Non-Exposed	51	51	51	51	51	51	51	51	51	51	51	51	51	51	51	51	51	51	51	51	51	51	51	51	51	51	51	50	50	50	49	49	49	48	48	47	47	47	44	46	46	41
				Exposed	51	51	51	51	51	51	51	51	51	51	51	51	51	51	51	51	51	51	51	51	51	51	51	51	51	51	47	50	49	43	49	45	40	45	42	37	42	40	35	40	37	33
		9:12	36.9	Non-Exposed	53	53	53	53	53	53	53	53	53	53	53	53	53	53	53	53	53	53	53	53	53	53	53	53	53	53	53	52	52	52	50	50	50	49	49	47	48	48	44	47	47	41
				Exposed	53	53	53	53	53	53	53	53	53	53	53	53	53	53	53	53	53	53	53	53	53	53	53	51	53	53	46	52	49	43	48	45	40	45	42	37	42	40	35	39	37	33
		10:12	39.8	Non-Exposed	56	56	56	56	56	56	56	56	56	56	56	56	56	56	56	56	56	56	56	56	56	55	55	55	54	54	54	53	53	53	52	52	50	51	51	47	50	50	44	49	47	41
				Exposed	56	56	56	56	56	56	56	56	56	56	56	56	56	56	56	56	56	56	56	56	53	55	55	51	54	53	46	52	49	43	48	45	40	45	42	37	42	40	35	39	37	33
		11:12	42.5	Non-Exposed	58	58	58	58	58	58	58	58	58	58	58	58	58	58	58	58	58	58	58	58	58	58	58	58	56	56	56	55	55	54	54	54	50	53	53	47	52	50	44	50	47	41
				Exposed	58	58	58	58	58	58	58	58	58	58	58	58	58	58	58	58	58	56	58	58	53	58	58	51	56	53	46	52	49	43	48	45	40	45	42	37	42	39	35	39	37	33
		12:12	45	Non-Exposed	61	61	61	61	61	61	61	61	61	61	61	61	61	61	61	61	61	61	60	60	60	60	60	60	58	58	58	57	57	54	56	56	50	54	53	47	53	50	44	50	47	41
				Exposed	61	61	61	61	61	61	61	61	61	61	61	61	61	61	59	61	61	56	60	60	53	60	58	51	57	53	46	52	49	43	48	45	40	45	42	37	42	39	35	39	37	33
	D	Flat	0	Non-Exposed	53	53	53	53	53	53	53	53	53	53	53	53	53	53	53	53	53	53	53	53	53	53	53	51	53	53	47	53	52	43	53	49	40	53	45	38	51	42	35	47	40	34
				Exposed	53	53	53	53	53	53	53	53	52	53	53	49	53	53	47	53	53	44	53	51	42	53	49	40	53	45	37	49	41	35	46	39	33	42	36	0	40	34	0	38	0	0
		1:12	4.8	Non-Exposed	49	49	49	49	49	49	49	49	49	49	49	49	49	49	49	49	49	49	49	49	49	49	49	49	49	49	47	49	49	43	49	48	40	49	45	38	49	42	35	47	40	34
				Exposed	49	49	49	49	49	49	49	49	49	49	49	49	49	49	46	49	49	44	49	49	42	49	49	40	49	45	37	49	41	35	46	38	32	42	36	0	40	34	0	38	0	0
		2:12	9.5	Non-Exposed	46	46	46	46	46	46	46	46	46	46	46	46	46	46	46	46	46	46	46	46	46	46	46	46	46	46	44	46	45	40	46	41	38	46	39	35	45	37	33	43	35	0
				Exposed	46	46	46	46	46	46	46	46	46	46	46	46	46	46	43	46	46	41	46	44	39	46	42	38	46	38	35	44	36	33	41	34	0	39	0	0	37	0	0	35	0	0
		3:12	14.0	Non-Exposed	45	45	45	45	45	45	45	45	45	45	45	45	45	45	45	45	45	45	45	45	45	45	45	45	45	45	43	45	45	40	45	41	38	45	39	35	45	37	33	43	35	0
				Exposed	45	45	45	45	45	45	45	45	45	45	45	45	45	45	43	45	45	41	45	44	39	45	41	38	45	38	35	44	36	33	41	34	0	39	0	0	37	0	0	35	0	0
		4:12	18.4	Non-Exposed	45	45	45	45	45	45	45	45	45	45	45	45	45	45	45	45	45	45	45	45	45	45	45	45	45	45	43	45	45	40	45	41	38	45	39	35	45	37	33	43	35	0
				Exposed	45	45	45	45	45	45	45	45	45	45	45	45	45	45	43	45	45	41	45	43	39	45	41	38	45	38	35	44	36	33	41	33	0	39	0	0	37	0	0	35	0	0
		5:12	22.6	Non-Exposed	46	46	46	46	46	46	46	46	46	46	46	46	46	46	46	46	46	46	46	46	46	46	46	46	46	46	46	46	46	45	46	46	42	46	43	39	46	40	36	45	38	34
				Exposed	46	46	46	46	46	46	46	46	46	46	46	46	46	46	46	46	46	46	46	46	44	46	46	42	46	42	38	46	39	35	46	37	33	45	35	0	42	33	0	40	0	0
		6:12	26.6	Non-Exposed	47	47	47	47	47	47	47	47	47	47	47	47	47	47	47	47	47	47	47	47	47	47	47	47	47	47	47	47	47	45	47	46	41	47	43	39	47	40	36	46	38	34
				Exposed	47	47	47	47	47	47	47	47	47	47	47	47	47	47	47	47	47	46	47	47	44	47	46	42	47	42	38	47	39	35	47	37	33	45	34	0	42	0	0	40	0	0
		7:12	30.3	Non-Exposed	49	49	49	49	49	49	49	49	49	49	49	49	49	49	49	49	49	49	49	49	49	49	49	49	48	48	48	47	47	47	46	46	46	45	45	43	44	44	40	43	42	38
				Exposed	49	49	49	49	49	49	49	49	49	49	49	49	49	49	49	49	49	49	49	49	48	49	49	46	48	48	42	47	44	39	44	41	36	41	39	34	38	36	0	36	34	0
		8:12	33.7	Non-Exposed	51	51	51	51	51	51	51	51	51	51	51	51	51	51	51	51	51	51	51	51	51	51	51	51	50	50	50	49	49	49	48	48	46	47	47	42	45	45	40	44	42	37
				Exposed	51	51	51	51	51	51	51	51	51	51	51	51	51	51	51	51	51	51	51	51	48	51	51	46	50	48	42	47	44	39	44	41	36	41	39	34	38	36	0	36	34	0
		9:12	36.9	Non-Exposed	53	53	53	53	53	53	53	53	53	53	53	53	53	53	53	53	53	53	53	53	53	52	52	52	51	51	51	50	50	49	49	49	46	48	48	42	47	45	40	45	42	37
				Exposed	53	53	53	53	53	53	53	53	53	53	53	53	53	53	53	53	53	51	53	53	48	52	52	46	51	48	42	47	44	39	44	41	36	41	38	34	38	36	0	36	34	0
		10:12	39.8	Non-Exposed	56	56	56	56	56	56	56	56	56	56	56	56	56	56	56	55	55	55	55	55	55	54	54	54	53	53	53	52	52	49	51	51	46	49	48	42	48	45	40	45	42	37
				Exposed	56	56	56	56	56	56	56	56	56	56	56	56	56	56	53	55	55	50	55	55	48	54	52	46	51	48	42	47	44	39	43	41	36	41	38	34	38	36	0	36	34	0
		11:12	42.5	Non-Exposed	58	58	58	58	58	58	58	58	58	58	58	58	58	58	58	58	58	57	57	57	56	56	56	55	55	55	53	54	54	49	52	52	45	51	48	42	48	45	40	45	42	37
				Exposed	58	58	58	58	58	58	58	58	58	58	58	56	58	58	53	58	57	50	57	55	48	56	52	46	51	48	42	47	44	39	43	41	36	41	38	34	38	36	0	36	34	0
		12:12	45	Non-Exposed	61	61	61	61	61	61	61	61	61	61	61	61	60	60	60	60	60	60	59	59	59	58	58	58	57	57	53	55	55	49	54	52	45	52	48	42	48	45	40	45	42	37
				Exposed	61	61	61	61	61	61	61	61	59	61	61	56	60	60	53	60	57	50	59	55	48	56	52	46	51	48	42	47	44	39	43	41	36	40	38	34	38	36	0	36	34	0

Tamarack 2.3 Rail – Gable Flush-Mount on 30 Foot Maximum Mean Roof Height – Portrait – Panel Length = 68 Inches or Less

Ground Snow Load	Exposure Category	Roof Pitch	Roof Angle	Wind Speed (mph)	95			100			105			110			115			120			125			130			140			150			160			170			180			190		
				Roof Area	1	2	3	1	2	3	1	2	3	1	2	3	1	2	3	1	2	3	1	2	3	1	2	3	1	2	3	1	2	3	1	2	3	1	2	3	1	2	3	1	2	3
50	B	Flat	0	Non-Exposed	50	50	50	50	50	50	50	50	50	50	50	50	50	50	50	50	50	50	50	50	50	50	50	50	50	50	50	50	50	50	50	50	50	50	50	50	50	50	47	50	50	44
				Exposed	50	50	50	50	50	50	50	50	50	50	50	50	50	50	50	50	50	50	50	50	50	50	50	50	50	50	50	50	50	46	50	50	42	50	48	40	50	45	37	50	42	35
		1:12	4.8	Non-Exposed	47	47	47	47	47	47	47	47	47	47	47	47	47	47	47	47	47	47	47	47	47	47	47	47	47	47	47	47	47	47	47	47	47	47	47	47	47	47	47	47	47	44
				Exposed	47	47	47	47	47	47	47	47	47	47	47	47	47	47	47	47	47	47	47	47	47	47	47	47	47	47	47	47	47	46	47	47	42	47	47	40	47	45	37	47	42	35
		2:12	9.5	Non-Exposed	44	44	44	44	44	44	44	44	44	44	44	44	44	44	44	44	44	44	44	44	44	44	44	44	44	44	44	44	44	44	44	44	44	44	44	44	44	44	44	44	44	41
				Exposed	44	44	44	44	44	44	44	44	44	44	44	44	44	44	44	44	44	44	44	44	44	44	44	44	44	44	44	44	44	43	44	44	40	44	41	37	44	39	35	44	36	33
		3:12	14.0	Non-Exposed	42	42	42	42	42	42	42	42	42	42	42	42	42	42	42	42	42	42	42	42	42	42	42	42	42	42	42	42	42	42	42	42	42	42	42	42	42	42	42	42	42	41
				Exposed	42	42	42	42	42	42	42	42	42	42	42	42	42	42	42	42	42	42	42	42	42	42	42	42	42	42	42	42	42	42	42	42	40	42	41	37	42	38	35	42	36	33
		4:12	18.4	Non-Exposed	42	42	42	42	42	42	42	42	42	42	42	42	42	42	42	42	42	42	42	42	42	42	42	42	42	42	42	42	42	42	42	42	42	42	42	42	42	42	42	42	42	41
				Exposed	42	42	42	42	42	42	42	42	42	42	42	42	42	42	42	42	42	42	42	42	42	42	42	42	42	42	42	42	42	42	42	42	39	42	41	37	42	38	35	42	36	33
		5:12	22.6	Non-Exposed	43	43	43	43	43	43	43	43	43	43	43	43	43	43	43	43	43	43	43	43	43	43	43	43	43	43	43	43	43	43	43	43	43	43	43	43	43	43	43	43	43	43
				Exposed	43	43	43	43	43	43	43	43	43	43	43	43	43	43	43	43	43	43	43	43	43	43	43	43	43	43	43	43	43	43	43	43	43	43	43	41	43	42	38	43	40	36
		6:12	26.6	Non-Exposed	45	45	45	45	45	45	45	45	45	45	45	45	45	45	45	45	45	45	45	45	45	45	45	45	45	45	45	45	45	45	45	45	45	45	45	45	45	45	45	45	45	45
				Exposed	45	45	45	45	45	45	45	45	45	45	45	45	45	45	45	45	45	45	45	45	45	45	45	45	45	45	45	45	45	45	45	45	45	45	45	42	45	42	38	45	42	35
		7:12	30.3	Non-Exposed	46	46	46	46	46	46	46	46	46	46	46	46	46	46	46	46	46	46	46	46	46	46	46	46	46	46	46	46	46	46	46	46	46	45	45	45	44	44	44	43	43	41
				Exposed	46	46	46	46	46	46	46	46	46	46	46	46	46	46	46	46	46	46	46	46	46	46	46	46	46	46	46	46	46	43	46	45	40	45	42	37	42	40	35	40	38	33
		8:12	33.7	Non-Exposed	48	48	48	48	48	48	48	48	48	48	48	48	48	48	48	48	48	48	48	48	48	48	48	48	48	48	48	48	48	48	47	47	47	46	46	46	45	45	44	45	45	41
				Exposed	48	48	48	48	48	48	48	48	48	48	48	48	48	48	48	48	48	48	48	48	48	48	48	48	48	48	47	48	48	43	47	45	40	45	42	37	42	40	35	40	37	33
		9:12	36.9	Non-Exposed	50	50	50	50	50	50	50	50	50	50	50	50	50	50	50	50	50	50	50	50	50	50	50	50	50	50	50	50	50	50	49	49	49	48	48	47	47	47	44	46	46	41
				Exposed	50	50	50	50	50	50	50	50	50	50	50	50	50	50	50	50	50	50	50	50	50	50	50	50	50	50	46	50	49	43	48	45	40	45	42	37	42	40	35	39	37	33
		10:12	39.8	Non-Exposed	53	53	53	53	53	53	53	53	53	53	53	53	53	53	53	53	53	53	53	53	53	53	53	53	53	53	53	52	52	52	51	51	50	49	49	47	48	48	44	47	47	41
				Exposed	53	53	53	53	53	53	53	53	53	53	53	53	53	53	53	53	53	53	53	53	53	53	53	51	53	53	46	52	49	43	48	45	40	45	42	37	42	40	35	39	37	33
		11:12	42.5	Non-Exposed	56	56	56	56	56	56	56	56	56	56	56	56	56	56	56	56	56	56	56	56	56	56	56	56	55	55	55	53	53	53	52	52	50	51	51	47	50	50	44	49	47	41
				Exposed	56	56	56	56	56	56	56	56	56	56	56	56	56	56	56	56	56	56	56	56	53	56	56	51	55	53	46	52	49	43	48	45	40	45	42	37	42	39	35	39	37	33
		12:12	45	Non-Exposed	59	59	59	59	59	59	59	59	59	59	59	59	59	59	59	59	59	59	58	58	58	58	58	58	57	57	57	55	55	54	54	54	50	53	53	47	52	50	44	50	47	41
				Exposed	59	59	59	59	59	59	59	59	59	59	59	59	59	59	59	59	59	56	58	58	53	58	58	51	57	53	46	52	49	43	48	45	40	45	42	37	42	39	35	39	37	33
	C	Flat	0	Non-Exposed	50	50	50	50	50	50	50	50	50	50	50	50	50	50	50	50	50	50	50	50	50	50	50	50	50	50	50	50	50	48	50	50	44	50	50	41	50	47	39	50	44	37
				Exposed	50	50	50	50	50	50	50	50	50	50	50	50	50	50	50	50	50	49	50	50	47	50	50	44	50	49	41	50	45	38	50	42	35	47	39	33	44	37	0	41	35	0
		1:12	4.8	Non-Exposed	47	47	47	47	47	47	47	47	47	47	47	47	47	47	47	47	47	47	47	47	47	47	47	47	47	47	47	47	47	47	47	47	44	47	47	41	47	47	39	47	44	37
				Exposed	47	47	47	47	47	47	47	47	47	47	47	47	47	47	47	47	47	47	47	47	46	47	47	44	47	47	41	47	45	38	47	42	35	47	39	33	44	37	0	41	35	0
		2:12	9.5	Non-Exposed	44	44	44	44	44	44	44	44	44	44	44	44	44	44	44	44	44	44	44	44	44	44	44	44	44	44	44	44	44	44	44	44	41	44	42	39	44	40	36	44	38	34
				Exposed	44	44	44	44	44	44	44	44	44	44	44	44	44	44	44	44	44	44	44	44	43	44	44	41	44	42	38	44	39	36	44	37	33	42	34	0	40	0	0	38	0	0
		3:12	14.0	Non-Exposed	42	42	42	42	42	42	42	42	42	42	42	42	42	42	42	42	42	42	42	42	42	42	42	42	42	42	42	42	42	42	42	42	41	42	42	38	42	40	36	42	38	34
				Exposed	42	42	42	42	42	42	42	42	42	42	42	42	42	42	42	42	42	42	42	42	41	42	42	38	42	39	36	42	37	33	42	34	0	40	0	0	38	0	0	38	0	0
		4:12	18.4	Non-Exposed	42	42	42	42	42	42	42	42	42	42	42	42	42	42	42	42	42	42	42	42	42	42	42	42	42	42	42	42	42	42	42	42	41	42	42	38	42	40	36	42	38	34
				Exposed	42	42	42	42	42	42	42	42	42	42	42	42	42	42	42	42	42	42	42	42	41	42	42	38	42	39	36	42	36	33	42	34	0	40	0	0	38	0	0	38	0	0
		5:12	22.6	Non-Exposed	43	43	43	43	43	43	43	43	43	43	43	43	43	43	43	43	43	43	43	43	43	43	43	43	43	43	43	43	43	43	43	43	43	43	43	43	43	43	40	43	41	38
				Exposed	43	43	43	43	43	43	43	43	43	43	43	43	43	43	43	43	43	43	43	43	43	43	43	43	43	43	42	43	43	39	43	40	36	43	38	34	43	35	32	43	34	0
		6:12	26.6	Non-Exposed	45	45	45	45	45	45	45	45	45	45	45	45	45	45	45	45	45	45	45	45	45	45	45	45	45	45	45	45	45	45	45	45	45	45	45	43	45	44	40	45	41	37
				Exposed	45	45	45	45	45	45	45	45	45	45	45	45	45	45	45	45	45	45	45	45	45	45	45	45	45	45	42	45	43	39	45	40	36	45	38	34	45	35	0	44	34	0
		7:12	30.3	Non-Exposed	46	46	46	46	46	46	46	46	46	46	46	46	46	46	46	46	46	46	46	46	46	46	46	46	46	46	46	46	46	46	46	46	46	45	45	45	44	44	44	43	43	41
				Exposed	46	46	46	46	46	46	46	46	46	46	46	46	46	46	46	46	46	46	46	46	46	46	46	46	46	46	46	46	46	43	46	45	40	45	42	37	42	40	35	40	38	33
		8:12	33.7	Non-Exposed	48	48	48	48	48	48	48	48	48	48	48	48	48	48	48	48	48	48	48	48	48	48	48	48	48	48	48	48	48	48	47	47	47	46	46	46	45	45	44	45	45	41
				Exposed	48	48	48	48	48	48	48	48	48	48	48	48	48	48	48	48	48	48	48	48	48	48	48	48	48	48	47	48	48	43	47	45	40	45	42	37	42	40	35	40	37	33
		9:12	36.9	Non-Exposed	50	50	50	50	50	50	50	50	50	50	50	50	50	50	50	50	50	50	50	50	50	50	50	50	50	50	50	50	50	50	49	49	49	48	48	47	47	47	44	46	46	41
				Exposed	50	50	50	50	50	50	50	50	50	50	50	50	50	50	50	50	50	50	50	50	50	50	50	50	50	50	46	50	49	43	48	45	40	45	42	37	42	40	35	39	37	33
		10:12	39.8	Non-Exposed	53	53	53	53	53	53	53	53	53	53	53	53	53	53	53	53	53	53	53	53	53	53	53	53	53	53	53	52	52	52	51	51	50	49	49	47	48	48	44	47	47	41
				Exposed	53	53	53	53	53	53	53	53	53	53	53	53	53	53	53	53	53	53	53	53	53	53	53	51	53	53	46	52	49	43	48	45	40	45	42	37	42	40	35	39	37	33
		11:12	42.5	Non-Exposed	56	56	56	56	56	56	56	56	56	56	56	56	56	56	56	56	56	56	56	56	56	56	56	56	55	55	55	53	53	53	52	52	50	51	51	47	50	50	44	49	47	41
				Exposed	56	56	56	56	56	56	56	56	56	56	56	56	56	56	56	56	56	56	56	56	53	56	56	51	55	53	46	52	49	43	48	45	40	45	42	37	42	39	35	39	37	33
		12:12	45	Non-Exposed	59	59	59	59	59	59	59	59	59	59	59	59	59	59	59	59	59	59	58	58	58	58	58	58	57	57	57	55	55	54	54	54	50	53	53	47	52	50	44	50	47	41
				Exposed	59	59	59	59	59	59	59	59	59	59	59	59	59	59	59	59	59	56	58	58	53	58	58	51	57	53	46	52	49	43	48	45	40	45	42	37	42	39	35	39	37	33
	D	Flat	0	Non-Exposed	50	50	50	50	50	50	50	50	50	50	50	50	50	50	50	50	50	50	50	50	50	50	50	50	50	50	47	50	50	43	50	49	40	50	45	38	50	42	35	47	40	34
				Exposed	50	50	50	50	50	50	50	50	50	50	50	49	50	50	47	50	50	44	50	50	42	50	49	40	50	45	37	49	41	35	46	39	33	42	36	0	40	34	0	38	0	0
		1:12	4.8	Non-Exposed	47	47	47	47	47	47	47	47	47	47	47	47	47	47	47	47	47	47	47	47	47	47	47	47	47	47	47	47	47	43	47	47	40	47	45	38	47	42	35	47	40	34
				Exposed	47	47	47	47	47	47	47	47	47	47	47	47	47	47	46	47	47	44	47	47	42	47	47	40	47	45	37	47	41	35	46	38	32	42	36	0	40	34	0	38	0	0
		2:12	9.5	Non-Exposed	44	44	44	44	44	44	44	44	44	44	44	44	44	44	44	44	44	44	44	44	44	44	44	44	44	44	44	44	44	40	44	41	38	44	39	35	44	37	33	43	35	0
				Exposed	44	44	44	44	44	44	44	44	44	44	44	44	44	44	43	44	44	41	44	44	39	44	42	38	44	38	35	44	36	33	41	34	0	39	0	0	37	0	0	35	0	0
		3:12	14.0	Non-Exposed	42	42	42	42	42	42	42	42	42	42	42	42	42	42	42	42	42	42	42	42	42	42	42	42	42	42	42	42	42	40	42	41	38	42	39	35	42	37	33	42	35	0
				Exposed	42	42	42	42	42	42	42	42	42	42	42	42	42	42	42	42	42	41	42	42	39	42	41	38	42	38	35	42	36	33	41	34	0	39	0	0	37	0	0	35	0	0
		4:12	18.4	Non-Exposed	42	42	42	42	42	42	42	42	42	42	42	42	42	42	42	42	42	42	42	42	42	42	42	42	42	42	42	42	42	40	42	41	38	42	39	35	42	37	33	42	35	0
				Exposed	42	42	42	42	42	42	42	42	42	42	42	42	42	42	42	42	42	41	42	42	39	42	41	38	42	38	35	42	36	33	41	33	0	39	0	0	37	0	0	35	0	0
		5:12	22.6	Non-Exposed	43	43	43	43	43	43	43	43	43	43	43	43	43	43	43	43	43	43	43	43	43	43	43	43	43	43	43	43	43	43	43	42	43	43	39	43	40	36	43	38	34
				Exposed	43	43	43	43	43	43	43	43	43	43	43	43	43	43	43	43	43	43	43	43	43	43	43	42	43	42	38	43	39	35	43	37	33	43	35	0	42	33	0	40	0	0
		6:12	26.6	Non-Exposed	45	45	45	45	45	45	45	45	45	45	45	45	45	45	45	45	45	45	45	45	45	45	45	45	45	45	45	45	45	45	45	45	41	45	43	39	45	40	36	45	38	34
				Exposed	45	45	45	45	45	45	45	45	45	45	45	45	45	45	45	45	45	45	45	45	44	45	45	42	45	42	38	45	39	35	45	37	33	45	34	0	42	0	0	40	0	0
		7:12	30.3	Non-Exposed	46	46	46	46	46	46	46	46	46	46	46	46	46	46	46	46	46	46	46	46	46	46	46	46	46	46	46	46	46	46	45	45	45	44	44	43	43	43	40	42	42	38
				Exposed	46	46	46	46	46	46	46	46	46	46	46	46	46	46	46	46	46	46	46	46	46	46	46	46	46	46	42	46	44	39	44	41	36	41	39	34	38	36	0	36	34	0
		8:12	33.7	Non-Exposed	48	48	48	48	48	48	48	48	48	48	48	48	48	48	48	48	48	48	48	48	48	48	48	48	48	48	48	47	47	47	46	46	46	45	45	42	44	44	40	43	42	37
				Exposed	48	48	48	48	48	48	48	48	48	48	48	48	48	48	48	48	48	48	48	48	48	48	48	42	47	44	39	44	41	36	41	39	34	38	36	0	36	34	0	36	34	0
		9:12	36.9	Non-Exposed	50	50	50	50	50	50	50	50	50	50	50	50	50	50	50	50	50	50	50	50	50	50	50	50	50	50	49	49	49	47	47	46	46	46	42	45	45	40	44	42	37
				Exposed	50	50	50	50	50	50	50	50	50	50	50	50	50	50	50	50	50	50	50	50	48	50	50	46	50	48	42	47	44	39	44	41	36	41	38	34	38	36	0	36	34	0
		10:12	39.8	Non-Exposed	53	53	53	53	53	53	53	53	53	53	53	53	53	53	53	53	53	53	53	53	53	52	52	52	51	51	51	50	50	49	49	49	46	48	48	42	47	45	40	45	42	37
				Exposed	53	53	53	53	53	53	53	53	53	53	53	53	53	53	53	53	53	50	53	53	48	52	52	46	51	48	42	47	44	39	43	41	36	41	38	34	38	36	0	36	34	0
		11:12	42.5	Non-Exposed	56	56	56	56	56	56	56	56	56	56	56	56	56	56	56	56	56	56	55	55	55	54	54	54	53	53	53	52	52	49	51	51	45	49	48	42	48	45	40	45	42	37
				Exposed	56	56	56	56	56	56	56	56	56	56	56	56	56	56	53	56	56	50	55	55	48	54	52	46	51	48	42	47	44	39	43	41	36	41	38	34	38	36	0	36	34	0
		12:12	45	Non-Exposed	59	59	59	59	59	59	59	59	59	59	59	59	58	58	58	58	58	58	57	57	57	56	56	56	55	55	53	54	54	49	52	52	45	51	48	42	48	45	40	45	42	37
				Exposed	59	59	59	59	59	59	59	59	59	59	59	56	58	58	53	58	57	50	57	55	48	56	52	46	51	48	42	47	44	39	43	41	36	40	38	34	38	36	0	36	34	0

Tamarack 2.3 Rail – Gable Flush-Mount on 30 Foot Maximum Mean Roof Height – Portrait – Panel Length = 68 Inches or Less

Ground Snow Load	Exposure Category	Roof Pitch	Roof Angle	Wind Speed (mph)	95			100			105			110			115			120			125			130			140			150			160			170			180			190		
				Roof Area	1	2	3	1	2	3	1	2	3	1	2	3	1	2	3	1	2	3	1	2	3	1	2	3	1	2	3	1	2	3	1	2	3	1	2	3	1	2	3	1	2	3
55	B	Flat	0	Non-Exposed	48	48	48	48	48	48	48	48	48	48	48	48	48	48	48	48	48	48	48	48	48	48	48	48	48	48	48	48	48	48	48	48	48	48	48	48	48	48	47	48	48	44
				Exposed	48	48	48	48	48	48	48	48	48	48	48	48	48	48	48	48	48	48	48	48	48	48	48	48	48	48	48	48	48	46	48	48	42	48	48	40	48	45	37	48	42	35
		1:12	4.8	Non-Exposed	45	45	45	45	45	45	45	45	45	45	45	45	45	45	45	45	45	45	45	45	45	45	45	45	45	45	45	45	45	45	45	45	45	45	45	45	45	45	45	45	45	44
				Exposed	45	45	45	45	45	45	45	45	45	45	45	45	45	45	45	45	45	45	45	45	45	45	45	45	45	45	45	45	45	45	45	45	42	45	45	40	45	45	37	45	42	35
		2:12	9.5	Non-Exposed	42	42	42	42	42	42	42	42	42	42	42	42	42	42	42	42	42	42	42	42	42	42	42	42	42	42	42	42	42	42	42	42	42	42	42	42	42	42	42	42	42	41
				Exposed	42	42	42	42	42	42	42	42	42	42	42	42	42	42	42	42	42	42	42	42	42	42	42	42	42	42	42	42	42	42	42	42	40	42	41	37	42	39	35	42	36	33
		3:12	14.0	Non-Exposed	40	40	40	40	40	40	40	40	40	40	40	40	40	40	40	40	40	40	40	40	40	40	40	40	40	40	40	40	40	40	40	40	40	40	40	40	40	40	40	40	40	40
				Exposed	40	40	40	40	40	40	40	40	40	40	40	40	40	40	40	40	40	40	40	40	40	40	40	40	40	40	40	40	40	37	40	40	40	40	40	37	40	38	35	40	36	33
		4:12	18.4	Non-Exposed	40	40	40	40	40	40	40	40	40	40	40	40	40	40	40	40	40	40	40	40	40	40	40	40	40	40	40	40	40	40	40	40	40	40	40	40	40	40	40	40	40	40
				Exposed	40	40	40	40	40	40	40	40	40	40	40	40	40	40	40	40	40	40	40	40	40	40	40	40	40	40	40	40	40	39	40	40	40	40	40	37	40	38	35	40	36	33
		5:12	22.6	Non-Exposed	41	41	41	41	41	41	41	41	41	41	41	41	41	41	41	41	41	41	41	41	41	41	41	41	41	41	41	41	41	41	41	41	41	41	41	41	41	41	41	41	41	41
				Exposed	41	41	41	41	41	41	41	41	41	41	41	41	41	41	41	41	41	41	41	41	41	41	41	41	41	41	41	41	41	41	41	41	41	41	41	41	41	41	38	41	40	36
		6:12	26.6	Non-Exposed	43	43	43	43	43	43	43	43	43	43	43	43	43	43	43	43	43	43	43	43	43	43	43	43	43	43	43	43	43	43	43	43	43	43	43	43	43	43	43	43	43	43
				Exposed	43	43	43	43	43	43	43	43	43	43	43	43	43	43	43	43	43	43	43	43	43	43	43	43	43	43	43	43	43	41	43	43	41	43	43	38	43	42	38	43	40	36
		7:12	30.3	Non-Exposed	44	44	44	44	44	44	44	44	44	44	44	44	44	44	44	44	44	44	44	44	44	44	44	44	44	44	44	44	44	44	44	44	44	44	44	44	44	44	44	44	44	44
				Exposed	44	44	44	44	44	44	44	44	44	44	44	44	44	44	44	44	44	44	44	44	44	44	44	44	44	44	44	44	44	43	44	44	40	44	42	37	42	40	35	40	38	33
		8:12	33.7	Non-Exposed	46	46	46	46	46	46	46	46	46	46	46	46	46	46	46	46	46	46	46	46	46	46	46	46	46	46	46	46	46	46	46	46	46	45	45	45	44	44	44	43	43	41
				Exposed	46	46	46	46	46	46	46	46	46	46	46	46	46	46	46	46	46	46	46	46	46	46	46	46	46	46	46	46	46	43	46	45	40	45	42	37	42	40	35	40	37	33
		9:12	36.9	Non-Exposed	48	48	48	48	48	48	48	48	48	48	48	48	48	48	48	48	48	48	48	48	48	48	48	48	48	48	48	48	48	48	47	47	47	46	46	46	46	46	44	45	45	41
				Exposed	48	48	48	48	48	48	48	48	48	48	48	48	48	48	48	48	48	48	48	48	48	48	48	48	48	48	46	48	48	43	47	45	40	45	42	37	42	40	35	39	37	33
		10:12	39.8	Non-Exposed	51	51	51	51	51	51	51	51	51	51	51	51	51	51	51	51	51	51	51	51	51	51	51	51	51	51	51	50	50	50	49	49	49	48	48	47	47	47	44	46	46	41
				Exposed	51	51	51	51	51	51	51	51	51	51	51	51	51	51	51	51	51	51	51	51	51	51	51	51	51	51	46	50	49	43	48	45	40	45	42	37	42	40	35	39	37	33
		11:12	42.5	Non-Exposed	53	53	53	53	53	53	53	53	53	53	53	53	53	53	53	53	53	53	53	53	53	53	53	53	53	53	53	52	52	52	51	51	50	50	50	47	49	49	44	48	47	41
				Exposed	53	53	53	53	53	53	53	53	53	53	53	53	53	53	53	53	53	53	53	53	53	53	53	51	53	53	46	52	49	43	48	45	40	45	42	37	42	39	35	39	37	33
		12:12	45	Non-Exposed	56	56	56	56	56	56	56	56	56	56	56	56	56	56	56	56	56	56	56	56	56	56	56	56	55	55	55	54	54	54	53	53	50	52	52	47	50	50	44	49	47	41
				Exposed	56	56	56	56	56	56	56	56	56	56	56	56	56	56	56	56	56	56	56	56	53	56	56	51	55	53	46	52	49	43	48	45	40	45	42	37	42	39	35	39	37	33
	C	Flat	0	Non-Exposed	48	48	48	48	48	48	48	48	48	48	48	48	48	48	48	48	48	48	48	48	48	48	48	48	48	48	48	48	48	48	48	48	44	48	48	41	48	47	39	48	44	37
				Exposed	48	48	48	48	48	48	48	48	48	48	48	48	48	48	48	48	48	47	48	48	44	48	48	41	48	45	38	48	42	35	47	39	33	44	37	0	41	35	0			
		1:12	4.8	Non-Exposed	45	45	45	45	45	45	45	45	45	45	45	45	45	45	45	45	45	45	45	45	45	45	45	45	45	45	45	45	45	45	45	45	44	45	45	41	45	45	39	45	44	37
				Exposed	45	45	45	45	45	45	45	45	45	45	45	45	45	45	45	45	45	45	45	45	44	45	45	41	45	45	38	45	42	35	45	39	33	44	37	0	41	35	0			
		2:12	9.5	Non-Exposed	42	42	42	42	42	42	42	42	42	42	42	42	42	42	42	42	42	42	42	42	42	42	42	42	42	42	42	42	42	41	42	42	39	42	40	36	42	38	34			
				Exposed	42	42	42	42	42	42	42	42	42	42	42	42	42	42	42	42	42	42	42	42	41	42	42	38	42	39	36	42	37	33	42	34	0	40	0	0	38	0	0			
		3:12	14.0	Non-Exposed	40	40	40	40	40	40	40	40	40	40	40	40	40	40	40	40	40	40	40	40	40	40	40	40	40	40	40	40	40	40	40	40	38	40	40	36	40	38	34			
				Exposed	40	40	40	40	40	40	40	40	40	40	40	40	40	40	40	40	40	40	40	40	40	40	40	38	40	39	36	40	37	33	40	34	0	40	0	0	38	0	0			
		4:12	18.4	Non-Exposed	40	40	40	40	40	40	40	40	40	40	40	40	40	40	40	40	40	40	40	40	40	40	40	40	40	40	40	40	40	40	40	40	38	40	40	36	40	38	34			
				Exposed	40	40	40	40	40	40	40	40	40	40	40	40	40	40	40	40	40	40	40	40	40	40	40	38	40	39	36	40	36	33	40	34	0	40	0	0	38	0	0			
		5:12	22.6	Non-Exposed	41	41	41	41	41	41	41	41	41	41	41	41	41	41	41	41	41	41	41	41	41	41	41	41	41	41	41	41	41	41	41	41	41	41	41	41	41	41	40	41	41	38
				Exposed	41	41	41	41	41	41	41	41	41	41	41	41	41	41	41	41	41	41	41	41	41	41	41	41	41	41	39	41	40	36	41	38	34	41	35	32	41	34	0			
		6:12	26.6	Non-Exposed	43	43	43	43	43	43	43	43	43	43	43	43	43	43	43	43	43	43	43	43	43	43	43	43	43	43	43	43	43	43	43	43	43	43	43	40	43	41	37			
				Exposed	43	43	43	43	43	43	43	43	43	43	43	43	43	43	43	43	43	43	43	43	43	43	43	43	43	43	39	43	40	36	43	38	34	43	35	0	43	34	0			
		7:12	30.3	Non-Exposed	44	44	44	44	44	44	44	44	44	44	44	44	44	44	44	44	44	44	44	44	44	44	44	44	44	44	44	44	44	44	44	44	44	44	44	43	43	43	42	42	41	
				Exposed	44	44	44	44	44	44	44	44	44	44	44	44	44	44	44	44	44	44	44	44	44	44	44	44	44	44	43	44	44	40	44	42	37	42	40	35	40	38	33			
		8:12	33.7	Non-Exposed	46	46	46	46	46	46	46	46	46	46	46	46	46	46	46	46	46	46	46	46	46	46	46	46	46	46	46	46	46	46	46	45	45	45	44	44	44	43	43	41		
				Exposed	46	46	46	46	46	46	46	46	46	46	46	46	46	46	46	46	46	46	46	46	46	46	46	46	46	46	43	46	45	40	45	42	37	42	40	35	40	37	33			
		9:12	36.9	Non-Exposed	48	48	48	48	48	48	48	48	48	48	48	48	48	48	48	48	48	48	48	48	48	48	48	48	48	48	48	48	48	48	47	47	47	46	46	46	46	46	44	45	45	41
				Exposed	48	48	48	48	48	48	48	48	48	48	48	48	48	48	48	48	48	48	48	48	48	48	48	46	48	48	43	47	45	40	45	42	37	42	40	35	39	37	33			
		10:12	39.8	Non-Exposed	51	51	51	51	51	51	51	51	51	51	51	51	51	51	51	51	51	51	51	51	51	51	51	51	51	50	50	50	49	49	48	48	47	47	47	44	46	46	41			
				Exposed	51	51	51	51	51	51	51	51	51	51	51	51	51	51	51	51	51	51	51	51	51	51	51	46	50	49	43	48	45	40	45	42	37	42	40	35	39	37	33			
		11:12	42.5	Non-Exposed	53	53	53	53	53	53	53	53	53	53	53	53	53	53	53	53	53	53	53	53	53	53	53	53	52	52	52	51	51	50	50	50	47	49	49	44	48	47	41			
				Exposed	53	53	53	53	53	53	53	53	53	53	53	53	53	53	53	53	53	53	53	53	51	53	53	46	52	49	43	48	45	40	45	42	37	42	39	35	39	37	33			
		12:12	45	Non-Exposed	56	56	56	56	56	56	56	56	56	56	56	56	56	56	56	56	56	56	56	56	55	55	55	54	54	54	53	53	50	52	52	47	50	50	44	49	47	41			
				Exposed	56	56	56	56	56	56	56	56	56	56	56	56	56	56	56	56	56	56	56	53	56	56	51	55	53	46	52	49	43	48	45	40	45	42	37	42	39	35	39	37	33			
	D	Flat	0	Non-Exposed	48	48	48	48	48	48	48	48	48	48	48	48	48	48	48	48	48	48	48	48	48	48	48	47	48	48	43	48	48	40	48	45	38	48	42	35	47	40	34			
				Exposed	48	48	48	48	48	48	48	48	48	48	48	48	48	48	47	48	48	44	48	48	42	48	48	40	48	45	37	48	41	35	46	39	33	42	36	0	40	34	0	38	0	0
		1:12	4.8	Non-Exposed	45	45	45	45	45	45	45	45	45	45	45	45	45	45	45	45	45	45	45	45	45	45	45	45	45	45	43	45	45	40	45	45	38	45	42	35	45	40	34			
				Exposed	45	45	45	45	45	45	45	45	45	45	45	45	45	45	45	45	45	44	45	45	42	45	45	40	45	45	37	45	41	35	45	38	32	42	36	0	40	34	0	38	0	0
		2:12	9.5	Non-Exposed	42	42	42	42	42	42	42	42	42	42	42	42	42	42	42	42	42	42	42	42	42	42	42	42	42	42	40	42	41	38	42	39	35	42	37	33	42	35	0			
				Exposed	42	42	42	42	42	42	42	42	42	42	42	42	42	42	42	42	42	41	42	42	39	42	42	38	42	38	35	42	36	33	41	34	0	39	0	0	37	0	0	35	0	0
		3:12	14.0	Non-Exposed	40	40	40	40	40	40	40	40	40	40	40	40	40	40	40	40	40	40	40	40	40	40	40	40	40	40	40	40	40	38	40	39	35	40	37	33	40	35	0			
				Exposed	40	40	40	40	40	40	40	40	40	40	40	40	40	40	40	40	40	39	40	40	38	40	38	35	40	36	33	40	34	0	39	0	0	37	0	0	35	0	0			
		4:12	18.4	Non-Exposed	40	40	40	40	40	40	40	40	40	40	40	40	40	40	40	40	40	40	40	40	40	40	40	40	40	40	40	40	40	38	40	39	35	40	37	33	40	35	0			
				Exposed	40	40	40	40	40	40	40	40	40	40	40	40	40	40	40	40	40	39	40	40	38	40	38	35	40	36	33	40	33	0	39	0	0	37	0	0	35	0	0			
		5:12	22.6	Non-Exposed	41	41	41	41	41	41	41	41	41	41	41	41	41	41	41	41	41	41	41	41	41	41	41	41	41	41	41	41	41	41	41	41	39	41	40	36	41	38	34			
				Exposed	41	41	41	41	41	41	41	41	41	41	41	41	41	41	41	41	41	41	41	41	41	41	41	38	41	39	35	41	37	33	41	35	0	41	33	0	40	0	0			
		6:12	26.6	Non-Exposed	43	43	43	43	43	43	43	43	43	43	43	43	43	43	43	43	43	43	43	43	43	43	43	43	43	43	43	43	43	41	43	43	39	43	40	36	43	38	34			
				Exposed	43	43	43	43	43	43	43	43	43	43	43	43	43	43	43	43	43	42	43	42	38	43	39	35	43	37	33	43	34	0	42	0	0	40	0	0						
		7:12	30.3	Non-Exposed	44	44	44	44	44	44	44	44	44	44	44	44	44	44	44	44	44	44	44	44	44	44	44	44	44	44	43	43	43	42	42	42	42	42	40	41	41	38				
				Exposed	44	44	44	44	44	44	44	44	44	44	44	44	44	44	44	44	44	44	44	44	42	44	44	39	43	41	36	41	39	34	38	36	0	36	34	0						
		8:12	33.7	Non-Exposed	46	46	46	46	46	46	46	46	46	46	46	46	46	46	46	46	46	46	46	46	46	46	46	46	45	45	45	45	45	45	44	44	42	43	43	40	42	42	37			
				Exposed	46	46	46	46	46	46	46	46	46	46	46	46	46	46	46	46	46	46	46	46	42	45	44	39	44	41	36	41	39	34	38	36	0	36	34	0						
		9:12	36.9	Non-Exposed	48	48	48	48	48	48	48	48	48	48	48	48	48	48	48	48	48	48	48	48	48	48	48	48	47	47	47	46	46	46	45	45	42	44	44	40	43	42	37			
				Exposed	48	48	48	48	48	48	48	48	48	48	48	48	48	48	48	48	48	48	48	48	42	47	48	39	44	41	36	41	38	34	38	36	0	36	34	0						
		10:12	39.8	Non-Exposed	51	51	51	51	51	51	51	51	51	51	51	51	51	51	51	51	51	51	51	51	50	50	50	49	49	49	48	48	46	47	47	42	46	45	40	44	42	37				
				Exposed	51	51	51	51	51	51	51	51	51	51	51	51	51	51	51	51	50	51	51	48	51	51	46	50	48	42	47	44	39	43	41	36	41	38	34	38	36	0	36	34	0			
		11:12	42.5	Non-Exposed	53	53	53	53	53	53	53	53	53	53	53	53	53	53	53	53	53	53	53	53	52	52	52	50	50	49	49	49	45	48	48	42	47	45	40	45	42	37				
				Exposed	53	53	53	53	53	53	53	53	53	53	53	53	53	53	53	53	50	53	53	48	53	52	46	51	48	42	47	44	39	43	41	36	41	38	34	38	36	0	36	34	0			
		12:12	45	Non-Exposed	56	56	56	56	56	56	56	56	56	56	56	56	56	56	56	56	56	56	55	55	55	55	55	55	54	54	53	52	52	49	51	51	45	50	48	42	48	45	40	45	42	37
				Exposed	56	56	56	56	56	56	56	56	56	56	56	56	56	56	53	56	56	50	55	55	48	55	52	46	51	48	42	47	44	39	43	41	36	40	38	34	38	36	0	36	34	0

Tamarack 2.3 Rail – Gable Flush-Mount on 30 Foot Maximum Mean Roof Height – Portrait – Panel Length = 68 Inches or Less

Ground Snow Load	Exposure Category	Roof Pitch	Roof Angle	Wind Speed (mph)	95			100			105			110			115			120			125			130			140			150			160			170			180			190		
				Roof Area	1	2	3	1	2	3	1	2	3	1	2	3	1	2	3	1	2	3	1	2	3	1	2	3	1	2	3	1	2	3	1	2	3	1	2	3	1	2	3	1	2	3
60	B	Flat	0	Non-Exposed	46	46	46	46	46	46	46	46	46	46	46	46	46	46	46	46	46	46	46	46	46	46	46	46	46	46	46	46	46	46	46	46	46	46	46	46	46	46	46	46	46	44
				Exposed	46	46	46	46	46	46	46	46	46	46	46	46	46	46	46	46	46	46	46	46	46	46	46	46	46	46	46	46	46	46	46	46	42	46	46	40	46	45	37	46	42	35
		1:12	4.8	Non-Exposed	43	43	43	43	43	43	43	43	43	43	43	43	43	43	43	43	43	43	43	43	43	43	43	43	43	43	43	43	43	43	43	43	43	43	43	43	43	43	43	43	43	43
				Exposed	43	43	43	43	43	43	43	43	43	43	43	43	43	43	43	43	43	43	43	43	43	43	43	43	43	43	43	43	43	43	43	43	42	43	43	40	43	43	37	43	42	35
		2:12	9.5	Non-Exposed	40	40	40	40	40	40	40	40	40	40	40	40	40	40	40	40	40	40	40	40	40	40	40	40	40	40	40	40	40	40	40	40	40	40	40	40	40	40	40	40	40	40
				Exposed	40	40	40	40	40	40	40	40	40	40	40	40	40	40	40	40	40	40	40	40	40	40	40	40	40	40	40	40	40	40	40	40	40	40	40	37	40	39	35	40	36	33
		3:12	14.0	Non-Exposed	39	39	39	39	39	39	39	39	39	39	39	39	39	39	39	39	39	39	39	39	39	39	39	39	39	39	39	39	39	39	39	39	39	39	39	39	39	39	39	39	39	39
				Exposed	39	39	39	39	39	39	39	39	39	39	39	39	39	39	39	39	39	39	39	39	39	39	39	39	39	39	39	39	39	39	39	39	39	39	39	37	39	38	35	39	36	33
		4:12	18.4	Non-Exposed	39	39	39	39	39	39	39	39	39	39	39	39	39	39	39	39	39	39	39	39	39	39	39	39	39	39	39	39	39	39	39	39	39	39	39	39	39	39	39	39	39	39
				Exposed	39	39	39	39	39	39	39	39	39	39	39	39	39	39	39	39	39	39	39	39	39	39	39	39	39	39	39	39	39	39	39	39	39	39	39	37	39	38	35	39	36	33
		5:12	22.6	Non-Exposed	40	40	40	40	40	40	40	40	40	40	40	40	40	40	40	40	40	40	40	40	40	40	40	40	40	40	40	40	40	40	40	40	40	40	40	40	40	40	40	40	40	40
				Exposed	40	40	40	40	40	40	40	40	40	40	40	40	40	40	40	40	40	40	40	40	40	40	40	40	40	40	40	40	40	40	40	40	40	40	40	40	40	40	38	40	40	36
		6:12	26.6	Non-Exposed	41	41	41	41	41	41	41	41	41	41	41	41	41	41	41	41	41	41	41	41	41	41	41	41	41	41	41	41	41	41	41	41	41	41	41	41	41	41	41	41	41	41
				Exposed	41	41	41	41	41	41	41	41	41	41	41	41	41	41	41	41	41	41	41	41	41	41	41	41	41	41	41	41	41	41	41	41	41	41	41	38	41	40	36	41	40	36
		7:12	30.3	Non-Exposed	42	42	42	42	42	42	42	42	42	42	42	42	42	42	42	42	42	42	42	42	42	42	42	42	42	42	42	42	42	42	42	42	42	42	42	42	42	42	42	42	42	42
				Exposed	42	42	42	42	42	42	42	42	42	42	42	42	42	42	42	42	42	42	42	42	42	42	42	42	42	42	42	42	42	42	42	42	42	42	42	40	42	42	40	42	42	40
		8:12	33.7	Non-Exposed	44	44	44	44	44	44	44	44	44	44	44	44	44	44	44	44	44	44	44	44	44	44	44	44	44	44	44	44	44	44	44	44	44	44	44	44	44	44	44	44	44	44
				Exposed	44	44	44	44	44	44	44	44	44	44	44	44	44	44	44	44	44	44	44	44	44	44	44	44	44	44	44	44	44	44	44	44	42	44	44	40	44	44	40	44	40	40
		9:12	36.9	Non-Exposed	46	46	46	46	46	46	46	46	46	46	46	46	46	46	46	46	46	46	46	46	46	46	46	46	46	46	46	46	46	46	46	46	46	46	46	46	46	46	46	46	46	46
				Exposed	46	46	46	46	46	46	46	46	46	46	46	46	46	46	46	46	46	46	46	46	46	46	46	46	46	46	46	46	46	46	46	46	42	46	46	40	46	45	37	46	45	40
		10:12	39.8	Non-Exposed	49	49	49	49	49	49	49	49	49	49	49	49	49	49	49	49	49	49	49	49	49	49	49	49	49	49	49	49	49	49	49	49	49	49	49	49	48	48	48	48	48	48
				Exposed	49	49	49	49	49	49	49	49	49	49	49	49	49	49	49	49	49	49	49	49	49	49	49	49	49	49	49	49	49	49	49	49	48	49	49	45	48	48	42	48	45	40
		11:12	42.5	Non-Exposed	51	51	51	51	51	51	51	51	51	51	51	51	51	51	51	51	51	51	51	51	51	51	51	51	51	51	51	51	51	51	51	51	51	51	51	51	50	50	50	49	49	49
				Exposed	51	51	51	51	51	51	51	51	51	51	51	51	51	51	51	51	51	51	51	51	51	51	51	51	51	51	51	51	51	51	51	51	48	51	51	45	50	48	42	48	45	40
		12:12	45	Non-Exposed	54	54	54	54	54	54	54	54	54	54	54	54	54	54	54	54	54	54	54	54	54	54	54	54	54	54	54	54	54	54	54	54	54	53	53	53	52	52	52	51	51	50
				Exposed	54	54	54	54	54	54	54	54	54	54	54	54	54	54	54	54	54	54	54	54	54	54	54	54	54	54	54	54	54	52	54	54	48	53	51	45	51	48	42	48	45	39
	C	Flat	0	Non-Exposed	46	46	46	46	46	46	46	46	46	46	46	46	46	46	46	46	46	46	46	46	46	46	46	46	46	46	46	46	46	46	46	46	44	46	46	41	46	46	39	46	44	37
				Exposed	46	46	46	46	46	46	46	46	46	46	46	46	46	46	46	46	46	46	46	46	44	46	46	41	46	45	38	46	42	35	46	39	33	44	37	0	41	35	0			
		1:12	4.8	Non-Exposed	43	43	43	43	43	43	43	43	43	43	43	43	43	43	43	43	43	43	43	43	43	43	43	43	43	43	43	43	43	43	43	43	41	43	43	39	43	43	37			
				Exposed	43	43	43	43	43	43	43	43	43	43	43	43	43	43	43	43	43	43	43	43	43	43	43	41	43	43	38	43	42	35	43	39	33	43	37	0	41	35	0			
		2:12	9.5	Non-Exposed	40	40	40	40	40	40	40	40	40	40	40	40	40	40	40	40	40	40	40	40	40	40	40	40	40	40	40	40	40	40	40	40	39	40	40	36	40	38	34			
				Exposed	40	40	40	40	40	40	40	40	40	40	40	40	40	40	40	40	40	40	40	40	40	40	40	38	40	39	36	40	37	33	40	34	0	40	0	0	38	0	0			
		3:12	14.0	Non-Exposed	39	39	39	39	39	39	39	39	39	39	39	39	39	39	39	39	39	39	39	39	39	39	39	39	39	39	39	39	39	39	39	39	38	39	39	36	39	38	34			
				Exposed	39	39	39	39	39	39	39	39	39	39	39	39	39	39	39	39	39	39	39	39	39	39	39	38	39	39	36	39	37	33	39	34	0	39	0	0	38	0	0			
		4:12	18.4	Non-Exposed	39	39	39	39	39	39	39	39	39	39	39	39	39	39	39	39	39	39	39	39	39	39	39	39	39	39	39	39	39	39	39	39	38	39	39	36	39	38	34			
				Exposed	39	39	39	39	39	39	39	39	39	39	39	39	39	39	39	39	39	39	39	39	39	39	39	38	39	39	36	39	36	33	39	34	0	39	0	0	38	0	0			
		5:12	22.6	Non-Exposed	40	40	40	40	40	40	40	40	40	40	40	40	40	40	40	40	40	40	40	40	40	40	40	40	40	40	40	40	40	40	40	40	40	40	40	40	40	40	38			
				Exposed	40	40	40	40	40	40	40	40	40	40	40	40	40	40	40	40	40	40	40	40	40	40	40	40	40	40	39	40	40	36	40	38	34	40	35	32	40	34	0			
		6:12	26.6	Non-Exposed	41	41	41	41	41	41	41	41	41	41	41	41	41	41	41	41	41	41	41	41	41	41	41	41	41	41	41	41	41	41	41	41	41	41	41	40	41	41	37			
				Exposed	41	41	41	41	41	41	41	41	41	41	41	41	41	41	41	41	41	41	41	41	41	41	41	41	41	41	39	41	40	36	41	38	34	41	35	0	41	34	0			
		7:12	30.3	Non-Exposed	42	42	42	42	42	42	42	42	42	42	42	42	42	42	42	42	42	42	42	42	42	42	42	42	42	42	42	42	42	42	42	42	42	42	42	42	41	41	41			
				Exposed	42	42	42	42	42	42	42	42	42	42	42	42	42	42	42	42	42	42	42	42	42	42	42	42	42	42	42	42	42	42	42	42	42	42	40	35	40	38	33			
		8:12	33.7	Non-Exposed	44	44	44	44	44	44	44	44	44	44	44	44	44	44	44	44	44	44	44	44	44	44	44	44	44	44	44	44	44	44	44	44	44	44	43	43	43	42	42			
				Exposed	44	44	44	44	44	44	44	44	44	44	44	44	44	44	44	44	44	44	44	44	44	44	44	44	44	44	43	44	44	40	44	42	37	42	40	35	40	37	33			
		9:12	36.9	Non-Exposed	46	46	46	46	46	46	46	46	46	46	46	46	46	46	46	46	46	46	46	46	46	46	46	46	46	46	46	46	46	46	46	46	45	45	45	44	44	42	43			
				Exposed	46	46	46	46	46	46	46	46	46	46	46	46	46	46	46	46	46	46	46	46	46	46	46	46	46	46	43	46	45	40	45	42	37	42	40	35	39	37	33			
		10:12	39.8	Non-Exposed	49	49	49	49	49	49	49	49	49	49	49	49	49	49	49	49	49	49	49	49	49	49	49	49	49	49	48	48	48	48	48	48	47	47	47	46	46	44	45			
				Exposed	49	49	49	49	49	49	49	49	49	49	49	49	49	49	49	49	49	49	49	49	49	49	49	46	48	48	43	48	45	40	45	42	37	42	40	35	39	37	33			
		11:12	42.5	Non-Exposed	51	51	51	51	51	51	51	51	51	51	51	51	51	51	51	51	51	51	51	51	51	51	51	51	51	51	50	50	50	49	49	49	48	48	47	47	47	44	46			
				Exposed	51	51	51	51	51	51	51	51	51	51	51	51	51	51	51	51	51	51	51	51	51	51	51	46	50	49	43	48	45	40	45	42	37	42	39	35	39	37	33			
		12:12	45	Non-Exposed	54	54	54	54	54	54	54	54	54	54	54	54	54	54	54	54	54	54	54	54	54	54	54	53	53	53	52	52	52	51	51	50	50	50	47	49	49	44	48			
				Exposed	54	54	54	54	54	54	54	54	54	54	54	54	54	54	54	54	54	54	54	54	53	54	54	51	53	53	46	52	49	43	48	45	40	45	42	37	42	39	35	39	37	33
	D	Flat	0	Non-Exposed	46	46	46	46	46	46	46	46	46	46	46	46	46	46	46	46	46	46	46	46	46	46	46	46	46	46	46	46	46	43	46	46	40	46	45	38	46	42	35	46	40	34
				Exposed	46	46	46	46	46	46	46	46	46	46	46	46	46	46	46	46	46	44	46	46	42	46	46	40	46	45	37	46	41	35	46	39	33	42	36	0	40	34	0	38	0	0
		1:12	4.8	Non-Exposed	43	43	43	43	43	43	43	43	43	43	43	43	43	43	43	43	43	43	43	43	43	43	43	43	43	43	43	43	43	43	43	43	40	43	43	38	43	42	35	43	40	34
				Exposed	43	43	43	43	43	43	43	43	43	43	43	43	43	43	43	43	43	43	43	43	42	43	43	40	43	43	37	43	41	35	43	38	32	42	36	0	40	34	0	38	0	0
		2:12	9.5	Non-Exposed	40	40	40	40	40	40	40	40	40	40	40	40	40	40	40	40	40	40	40	40	40	40	40	40	40	40	40	40	40	40	40	40	38	40	39	35	40	37	33	40	35	0
				Exposed	40	40	40	40	40	40	40	40	40	40	40	40	40	40	40	40	40	40	40	40	39	40	40	38	40	38	35	40	36	33	40	34	0	39	0	0	37	0	0	35	0	0
		3:12	14.0	Non-Exposed	39	39	39	39	39	39	39	39	39	39	39	39	39	39	39	39	39	39	39	39	39	39	39	39	39	39	39	39	39	39	39	39	38	39	39	35	39	37	33	39	35	0
				Exposed	39	39	39	39	39	39	39	39	39	39	39	39	39	39	39	39	39	39	39	39	39	39	39	38	39	38	35	39	36	33	39	34	0	39	0	0	37	0	0	35	0	0
		4:12	18.4	Non-Exposed	39	39	39	39	39	39	39	39	39	39	39	39	39	39	39	39	39	39	39	39	39	39	39	39	39	39	39	39	39	39	39	39	38	39	39	35	39	37	33	39	35	0
				Exposed	39	39	39	39	39	39	39	39	39	39	39	39	39	39	39	39	39	39	39	39	39	39	39	38	39	38	35	39	36	33	39	33	0	39	0	0	37	0	0	35	0	0
		5:12	22.6	Non-Exposed	40	40	40	40	40	40	40	40	40	40	40	40	40	40	40	40	40	40	40	40	40	40	40	40	40	40	40	40	40	40	40	40	40	40	40	39	40	40	36	40	38	34
				Exposed	40	40	40	40	40	40	40	40	40	40	40	40	40	40	40	40	40	40	40	40	40	40	40	38	40	39	35	40	37	33	40	35	0	40	33	0	40	0	0			
		6:12	26.6	Non-Exposed	41	41	41	41	41	41	41	41	41	41	41	41	41	41	41	41	41	41	41	41	41	41	41	41	41	41	41	41	41	41	41	41	39	41	40	36	41	38	34			
				Exposed	41	41	41	41	41	41	41	41	41	41	41	41	41	41	41	41	41	41	41	41	41	41	41	38	41	39	35	41	37	33	41	34	0	41	0	0	40	0	0			
		7:12	30.3	Non-Exposed	42	42	42	42	42	42	42	42	42	42	42	42	42	42	42	42	42	42	42	42	42	42	42	42	42	42	42	42	42	42	42	42	42	41	41	41	41	41	40			
				Exposed	42	42	42	42	42	42	42	42	42	42	42	42	42	42	42	42	42	42	42	42	42	42	42	42	42	42	39	42	41	36	41	39	34	38	36	0	36	34	0			
		8:12	33.7	Non-Exposed	44	44	44	44	44	44	44	44	44	44	44	44	44	44	44	44	44	44	44	44	44	44	44	44	44	44	44	44	44	44	43	43	43	42	42	42	42	42	40			
				Exposed	44	44	44	44	44	44	44	44	44	44	44	44	44	44	44	44	44	44	44	44	42	44	44	39	43	41	36	41	39	34	38	36	0	36	34	0						
		9:12	36.9	Non-Exposed	46	46	46	46	46	46	46	46	46	46	46	46	46	46	46	46	46	46	46	46	46	46	46	46	46	46	46	46	46	45	45	45	44	44	42	43	43	40	42			
				Exposed	46	46	46	46	46	46	46	46	46	46	46	46	46	46	46	46	46	46	46	46	42	46	44	39	44	41	36	41	38	34	38	36	0	36	34	0						
		10:12	39.8	Non-Exposed	49	49	49	49	49	49	49	49	49	49	49	49	49	49	49	49	49	49	49	49	49	49	49	48	48	48	47	47	47	46	46	46	45	45	42	44	44	40	43			
				Exposed	49	49	49	49	49	49	49	49	49	49	49	49	49	49	49	49	49	49	49	49	48	49	49	46	48	48	42	47	44	39	43	41	36	41	38	34	38	36	0	36	34	0
		11:12	42.5	Non-Exposed	51	51	51	51	51	51	51	51	51	51	51	51	51	51	51	51	51	51	51	51	51	51	51	50	50	50	49	49	49	48	48	45	47	47	42	46	45	40	45			
				Exposed	51	51	51	51	51	51	51	51	51	51	51	51	51	51	51	51	51	50	51	51	48	51	51	46	50	48	42	47	44	39	43	41	36	41	38	34	38	36	0	36	34	0
		12:12	45	Non-Exposed	54	54	54	54	54	54	54	54	54	54	54	54	54	54	54	54	54	54	54	54	54	54	54	53	53	53	52	52	52	51	51	49	50	50	45	49	48	42	47	45	40	45	42	37
				Exposed	54	54	54	54	54	54	54	54	54	54	54	54	54	54	53	54	54	50	54	54	48	53	52	46	51	48	42	47	44	39	43	41	36	40	38	34	38	36	0	36	34	0

Tamarack 2.3 Rail – Gable Flush-Mount on 30 Foot Maximum Mean Roof Height – Portrait – Panel Length = 68 Inches or Less

Ground Snow Load	Exposure Category	Roof Pitch	Roof Angle	Wind Speed (mph)	95			100			105			110			115			120			125			130			140			150			160			170			180			190		
				Roof Area	1	2	3	1	2	3	1	2	3	1	2	3	1	2	3	1	2	3	1	2	3	1	2	3	1	2	3	1	2	3	1	2	3	1	2	3	1	2	3	1	2	3
70	B	Flat	0	Non-Exposed	43	43	43	43	43	43	43	43	43	43	43	43	43	43	43	43	43	43	43	43	43	43	43	43	43	43	43	43	43	43	43	43	43	43	43	43	43	43	43	43	43	43
				Exposed	43	43	43	43	43	43	43	43	43	43	43	43	43	43	43	43	43	43	43	43	43	43	43	43	43	43	43	43	43	43	43	43	42	43	43	40	43	43	37	43	42	35
		1:12	4.8	Non-Exposed	40	40	40	40	40	40	40	40	40	40	40	40	40	40	40	40	40	40	40	40	40	40	40	40	40	40	40	40	40	40	40	40	40	40	40	40	40	40	40	40	40	40
				Exposed	40	40	40	40	40	40	40	40	40	40	40	40	40	40	40	40	40	40	40	40	40	40	40	40	40	40	40	40	40	40	40	40	40	40	40	40	40	40	37	40	40	35
		2:12	9.5	Non-Exposed	37	37	37	37	37	37	37	37	37	37	37	37	37	37	37	37	37	37	37	37	37	37	37	37	37	37	37	37	37	37	37	37	37	37	37	37	37	37	37	37	37	37
				Exposed	37	37	37	37	37	37	37	37	37	37	37	37	37	37	37	37	37	37	37	37	37	37	37	37	37	37	37	37	37	37	37	37	37	37	37	37	37	37	35	37	36	33
		3:12	14.0	Non-Exposed	36	36	36	36	36	36	36	36	36	36	36	36	36	36	36	36	36	36	36	36	36	36	36	36	36	36	36	36	36	36	36	36	36	36	36	36	36	36	36	36	36	36
				Exposed	36	36	36	36	36	36	36	36	36	36	36	36	36	36	36	36	36	36	36	36	36	36	36	36	36	36	36	36	36	36	36	36	36	36	36	36	36	36	35	36	36	33
		4:12	18.4	Non-Exposed	36	36	36	36	36	36	36	36	36	36	36	36	36	36	36	36	36	36	36	36	36	36	36	36	36	36	36	36	36	36	36	36	36	36	36	36	36	36	36	36	36	36
				Exposed	36	36	36	36	36	36	36	36	36	36	36	36	36	36	36	36	36	36	36	36	36	36	36	36	36	36	36	36	36	36	36	36	36	36	36	36	36	36	35	36	36	33
		5:12	22.6	Non-Exposed	37	37	37	37	37	37	37	37	37	37	37	37	37	37	37	37	37	37	37	37	37	37	37	37	37	37	37	37	37	37	37	37	37	37	37	37	37	37	37	37	37	37
				Exposed	37	37	37	37	37	37	37	37	37	37	37	37	37	37	37	37	37	37	37	37	37	37	37	37	37	37	37	37	37	37	37	37	37	37	37	37	37	37	37	37	37	36
		6:12	26.6	Non-Exposed	38	38	38	38	38	38	38	38	38	38	38	38	38	38	38	38	38	38	38	38	38	38	38	38	38	38	38	38	38	38	38	38	38	38	38	38	38	38	38	38	38	38
				Exposed	38	38	38	38	38	38	38	38	38	38	38	38	38	38	38	38	38	38	38	38	38	38	38	38	38	38	38	38	38	38	38	38	38	38	38	38	38	38	38	38	38	36
		7:12	30.3	Non-Exposed	39	39	39	39	39	39	39	39	39	39	39	39	39	39	39	39	39	39	39	39	39	39	39	39	39	39	39	39	39	39	39	39	39	39	39	39	39	39	39	39	39	39
				Exposed	39	39	39	39	39	39	39	39	39	39	39	39	39	39	39	39	39	39	39	39	39	39	39	39	39	39	39	39	39	39	39	39	39	39	39	39	39	39	39	39	39	39
		8:12	33.7	Non-Exposed	41	41	41	41	41	41	41	41	41	41	41	41	41	41	41	41	41	41	41	41	41	41	41	41	41	41	41	41	41	41	41	41	41	41	41	41	41	41	41	41	41	41
				Exposed	41	41	41	41	41	41	41	41	41	41	41	41	41	41	41	41	41	41	41	41	41	41	41	41	41	41	41	41	41	41	41	41	41	41	41	41	41	41	41	41	41	40
		9:12	36.9	Non-Exposed	43	43	43	43	43	43	43	43	43	43	43	43	43	43	43	43	43	43	43	43	43	43	43	43	43	43	43	43	43	43	43	43	43	43	43	43	43	43	43	43	43	43
				Exposed	43	43	43	43	43	43	43	43	43	43	43	43	43	43	43	43	43	43	43	43	43	43	43	43	43	43	43	43	43	43	43	43	43	43	43	43	43	43	42	43	43	40
		10:12	39.8	Non-Exposed	45	45	45	45	45	45	45	45	45	45	45	45	45	45	45	45	45	45	45	45	45	45	45	45	45	45	45	45	45	45	45	45	45	45	45	45	45	45	45	45	45	45
				Exposed	45	45	45	45	45	45	45	45	45	45	45	45	45	45	45	45	45	45	45	45	45	45	45	45	45	45	45	45	45	45	45	45	45	45	45	45	45	45	42	45	45	40
		11:12	42.5	Non-Exposed	48	48	48	48	48	48	48	48	48	48	48	48	48	48	48	48	48	48	48	48	48	48	48	48	48	48	48	48	48	48	48	48	48	48	48	48	48	48	47	47	47	47
				Exposed	48	48	48	48	48	48	48	48	48	48	48	48	48	48	48	48	48	48	48	48	48	48	48	48	48	48	48	48	48	48	48	48	48	48	48	48	48	48	42	47	45	40
		12:12	45	Non-Exposed	51	51	51	51	51	51	51	51	51	51	51	51	51	51	51	51	51	51	51	51	51	51	51	51	51	51	51	51	51	51	51	51	51	50	50	50	50	50	50	49	49	49
				Exposed	51	51	51	51	51	51	51	51	51	51	51	51	51	51	51	51	51	51	51	51	51	51	51	51	51	51	51	51	51	51	51	51	48	50	50	45	50	48	42	48	45	39
	C	Flat	0	Non-Exposed	43	43	43	43	43	43	43	43	43	43	43	43	43	43	43	43	43	43	43	43	43	43	43	43	43	43	43	43	43	43	43	43	43	43	43	41	43	43	39	43	43	37
				Exposed	43	43	43	43	43	43	43	43	43	43	43	43	43	43	43	43	43	43	43	43	43	43	43	43	43	43	41	43	43	38	43	42	35	43	39	33	43	37	0	41	35	0
		1:12	4.8	Non-Exposed	40	40	40	40	40	40	40	40	40	40	40	40	40	40	40	40	40	40	40	40	40	40	40	40	40	40	40	40	40	40	40	40	40	40	40	40	40	40	39	40	40	37
				Exposed	40	40	40	40	40	40	40	40	40	40	40	40	40	40	40	40	40	40	40	40	40	40	40	40	40	40	40	40	40	38	40	40	35	40	39	33	40	37	0	40	35	0
		2:12	9.5	Non-Exposed	37	37	37	37	37	37	37	37	37	37	37	37	37	37	37	37	37	37	37	37	37	37	37	37	37	37	37	37	37	37	37	37	37	37	37	37	37	37	36	37	37	34
				Exposed	37	37	37	37	37	37	37	37	37	37	37	37	37	37	37	37	37	37	37	37	37	37	37	37	37	37	37	37	37	36	37	37	33	37	34	0	37	0	0	37	0	0
		3:12	14.0	Non-Exposed	36	36	36	36	36	36	36	36	36	36	36	36	36	36	36	36	36	36	36	36	36	36	36	36	36	36	36	36	36	36	36	36	36	36	36	36	36	36	36	36	36	34
				Exposed	36	36	36	36	36	36	36	36	36	36	36	36	36	36	36	36	36	36	36	36	36	36	36	36	36	36	36	36	36	33	36	34	0	36	0	0	36	0	0	36	0	0
		4:12	18.4	Non-Exposed	36	36	36	36	36	36	36	36	36	36	36	36	36	36	36	36	36	36	36	36	36	36	36	36	36	36	36	36	36	36	36	36	36	36	36	36	36	36	36	36	36	34
				Exposed	36	36	36	36	36	36	36	36	36	36	36	36	36	36	36	36	36	36	36	36	36	36	36	36	36	36	36	36	36	33	36	34	0	36	0	0	36	0	0	36	0	0
		5:12	22.6	Non-Exposed	37	37	37	37	37	37	37	37	37	37	37	37	37	37	37	37	37	37	37	37	37	37	37	37	37	37	37	37	37	37	37	37	37	37	37	37	37	37	37	37	37	37
				Exposed	37	37	37	37	37	37	37	37	37	37	37	37	37	37	37	37	37	37	37	37	37	37	37	37	37	37	37	37	37	36	37	37	34	37	35	32	37	34	0			
		6:12	26.6	Non-Exposed	38	38	38	38	38	38	38	38	38	38	38	38	38	38	38	38	38	38	38	38	38	38	38	38	38	38	38	38	38	38	38	38	38	38	38	38	38	38	38	38	38	37
				Exposed	38	38	38	38	38	38	38	38	38	38	38	38	38	38	38	38	38	38	38	38	38	38	38	38	38	38	38	38	38	36	38	38	34	38	35	0	38	34	0			
		7:12	30.3	Non-Exposed	39	39	39	39	39	39	39	39	39	39	39	39	39	39	39	39	39	39	39	39	39	39	39	39	39	39	39	39	39	39	39	39	39	39	39	39	39	39	39	39	39	39
				Exposed	39	39	39	39	39	39	39	39	39	39	39	39	39	39	39	39	39	39	39	39	39	39	39	39	39	39	39	39	39	37	39	39	35	39	38	33						
		8:12	33.7	Non-Exposed	41	41	41	41	41	41	41	41	41	41	41	41	41	41	41	41	41	41	41	41	41	41	41	41	41	41	41	41	41	41	41	41	41	41	41	41	40	40	40			
				Exposed	41	41	41	41	41	41	41	41	41	41	41	41	41	41	41	41	41	41	41	41	41	41	41	41	41	41	41	41	41	40	41	41	37	41	40	35	40	37	33			
		9:12	36.9	Non-Exposed	43	43	43	43	43	43	43	43	43	43	43	43	43	43	43	43	43	43	43	43	43	43	43	43	43	43	43	43	43	43	43	43	43	43	43	42	42	42	41			
				Exposed	43	43	43	43	43	43	43	43	43	43	43	43	43	43	43	43	43	43	43	43	43	43	43	43	43	43	43	43	43	40	43	42	37	42	40	35	39	37	33			
		10:12	39.8	Non-Exposed	45	45	45	45	45	45	45	45	45	45	45	45	45	45	45	45	45	45	45	45	45	45	45	45	45	45	45	45	45	45	45	45	44	44	44	44	44	44	43	41		
				Exposed	45	45	45	45	45	45	45	45	45	45	45	45	45	45	45	45	45	45	45	45	45	45	45	45	45	45	45	45	43	45	45	40	44	42	37	42	40	35	39	37	33	
		11:12	42.5	Non-Exposed	48	48	48	48	48	48	48	48	48	48	48	48	48	48	48	48	48	48	48	48	48	48	48	48	48	48	48	48	48	47	47	47	46	46	46	45	45	44	44	41		
				Exposed	48	48	48	48	48	48	48	48	48	48	48	48	48	48	48	48	48	48	48	48	48	48	48	48	48	46	48	48	43	47	45	40	45	42	37	42	39	35	39	37	33	
		12:12	45	Non-Exposed	51	51	51	51	51	51	51	51	51	51	51	51	51	51	51	51	51	51	51	51	51	51	51	51	51	51	50	50	50	49	49	49	48	48	47	47	47	44	46	46	41	
				Exposed	51	51	51	51	51	51	51	51	51	51	51	51	51	51	51	51	51	51	51	51	51	51	51	51	53	46	50	49	43	48	45	40	45	42	37	42	39	35	39	37	33	
	D	Flat	0	Non-Exposed	43	43	43	43	43	43	43	43	43	43	43	43	43	43	43	43	43	43	43	43	43	43	43	43	43	43	43	43	43	43	43	40	43	43	38	43	42	35	43	40	34	
				Exposed	43	43	43	43	43	43	43	43	43	43	43	43	43	43	43	43	43	42	43	43	40	43	43	37	43	41	35	43	39	33	42	36	0	40	34	0	38	0	0			
		1:12	4.8	Non-Exposed	40	40	40	40	40	40	40	40	40	40	40	40	40	40	40	40	40	40	40	40	40	40	40	40	40	40	40	40	40	40	40	40	40	40	38	40	40	35	40	40	34	
				Exposed	40	40	40	40	40	40	40	40	40	40	40	40	40	40	40	40	40	40	40	40	40	40	40	37	40	40	35	40	38	32	40	36	0	40	34	0	38	0	0			
		2:12	9.5	Non-Exposed	37	37	37	37	37	37	37	37	37	37	37	37	37	37	37	37	37	37	37	37	37	37	37	37	37	37	37	37	37	37	37	37	35	37	37	33	37	35	0			
				Exposed	37	37	37	37	37	37	37	37	37	37	37	37	37	37	37	37	37	37	37	37	37	37	37	35	37	36	33	37	34	0	37	0	0	37	0	0	35	0	0			
		3:12	14.0	Non-Exposed	36	36	36	36	36	36	36	36	36	36	36	36	36	36	36	36	36	36	36	36	36	36	36	36	36	36	36	36	36	36	36	36	35	36	36	33	36	35	0			
				Exposed	36	36	36	36	36	36	36	36	36	36	36	36	36	36	36	36	36	36	36	36	36	36	36	35	36	36	33	36	34	0	36	0	0	36	0	0	35	0	0			
		4:12	18.4	Non-Exposed	36	36	36	36	36	36	36	36	36	36	36	36	36	36	36	36	36	36	36	36	36	36	36	36	36	36	36	36	36	36	36	36	35	36	36	33	36	35	0			
				Exposed	36	36	36	36	36	36	36	36	36	36	36	36	36	36	36	36	36	36	36	36	36	36	36	35	36	36	33	36	33	0	36	0	0	36	0	0	35	0	0			
		5:12	22.6	Non-Exposed	37	37	37	37	37	37	37	37	37	37	37	37	37	37	37	37	37	37	37	37	37	37	37	37	37	37	37	37	37	37	37	37	37	37	37	37	37	37	36	37	37	34
				Exposed	37	37	37	37	37	37	37	37	37	37	37	37	37	37	37	37	37	37	37	37	37	37	37	37	37	37	37	37	35	37	37	33	37	35	0	37	33	0	37	0	0	
		6:12	26.6	Non-Exposed	38	38	38	38	38	38	38	38	38	38	38	38	38	38	38	38	38	38	38	38	38	38	38	38	38	38	38	38	38	38	38	38	38	38	38	38	38	36	38	34		
				Exposed	38	38	38	38	38	38	38	38	38	38	38	38	38	38	38	38	38	38	38	38	38	38	38	38	38	38	38	38	35	38	37	33	38	34	0	38	0	0	38	0	0	
		7:12	30.3	Non-Exposed	39	39	39	39	39	39	39	39	39	39	39	39	39	39	39	39	39	39	39	39	39	39	39	39	39	39	39	39	39	39	39	39	39	39	39	39	39	39	38	38		
				Exposed	39	39	39	39	39	39	39	39	39	39	39	39	39	39	39	39	39	39	39	39	39	39	39	39	39	39	39	39	39	36	39	39	34	38	36	0	36	34	0			
		8:12	33.7	Non-Exposed	41	41	41	41	41	41	41	41	41	41	41	41	41	41	41	41	41	41	41	41	41	41	41	41	41	41	41	41	41	41	41	41	40	40	40	40	40	40	39	39	37	
				Exposed	41	41	41	41	41	41	41	41	41	41	41	41	41	41	41	41	41	41	41	41	41	41	41	41	41	41	41	39	41	41	36	40	39	34	38	36	0	36	34	0		
		9:12	36.9	Non-Exposed	43	43	43	43	43	43	43	43	43	43	43	43	43	43	43	43	43	43	43	43	43	43	43	43	43	43	43	43	42	42	42	42	42	42	41	41	40	40	37			
				Exposed	43	43	43	43	43	43	43	43	43	43	43	43	43	43	43	43	43	43	43	43	43	43	43	42	43	43	39	42	41	36	41	38	34	38	36	0	36	34	0			
		10:12	39.8	Non-Exposed	45	45	45	45	45	45	45	45	45	45	45	45	45	45	45	45	45	45	45	45	45	45	45	45	45	45	45	45	44	44	44	43	43	42	42	42	40	42	42	37		
				Exposed	45	45	45	45	45	45	45	45	45	45	45	45	45	45	45	45	45	45	45	45	45	45	45	42	45	44	39	43	41	36	41	38	34	38	36	0	36	34	0			
		11:12	42.5	Non-Exposed	48	48	48	48	48	48	48	48	48	48	48	48	48	48	48	48	48	48	48	48	48	48	48	48	48	48	47	47	47	46	46	45	45	45	42	44	44	40	43	42	37	
				Exposed	48	48	48	48	48	48	48	48	48	48	48	48	48	48	48	48	48	48	48	48	48	48	48	46	48	48	42	47	44	39	43	41	36	41	38	34	38	36	0	36	34	0	
		12:12	45	Non-Exposed	51	51	51	51	51	51	51	51	51	51	51	51	51	51	51	51	51	51	51	51	51	51	51	50	50	50	49	49	49	48	48	45	46	46	42	45	45	40	44	42	37	
				Exposed	51	51	51	51	51	51	51	51	51	51	51	51	51	51	51	51	50	51	51	48	51	51	46	50	48	42	47	44	39	43	41	36	40	38	34	38	36	0	36	34	0	

Tamarack 2.3 Rail – Gable Flush-Mount on 30 Foot Maximum Mean Roof Height – Portrait – Panel Length = 68 Inches or Less

Ground Snow Load	Exposure Category	Roof Pitch	Roof Angle	Wind Speed (mph)	95			100			105			110			115			120			125			130			140			150			160			170			180			190		
				Roof Area	1	2	3	1	2	3	1	2	3	1	2	3	1	2	3	1	2	3	1	2	3	1	2	3	1	2	3	1	2	3	1	2	3	1	2	3	1	2	3	1	2	3
80	B	Flat	0	Non-Exposed	40	40	40	40	40	40	40	40	40	40	40	40	40	40	40	40	40	40	40	40	40	40	40	40	40	40	40	40	40	40	40	40	40	40	40	40	40	40	40	40	40	40
				Exposed	40	40	40	40	40	40	40	40	40	40	40	40	40	40	40	40	40	40	40	40	40	40	40	40	40	40	40	40	40	40	40	40	40	40	40	40	40	40	37	40	40	35
		1:12	4.8	Non-Exposed	37	37	37	37	37	37	37	37	37	37	37	37	37	37	37	37	37	37	37	37	37	37	37	37	37	37	37	37	37	37	37	37	37	37	37	37	37	37	37	37	37	37
				Exposed	37	37	37	37	37	37	37	37	37	37	37	37	37	37	37	37	37	37	37	37	37	37	37	37	37	37	37	37	37	37	37	37	37	37	37	37	37	37	37	37	37	35
		2:12	9.5	Non-Exposed	35	35	35	35	35	35	35	35	35	35	35	35	35	35	35	35	35	35	35	35	35	35	35	35	35	35	35	35	35	35	35	35	35	35	35	35	35	35	35	35	35	35
				Exposed	35	35	35	35	35	35	35	35	35	35	35	35	35	35	35	35	35	35	35	35	35	35	35	35	35	35	35	35	35	35	35	35	35	35	35	35	35	35	35	35	35	33
		3:12	14.0	Non-Exposed	34	34	34	34	34	34	34	34	34	34	34	34	34	34	34	34	34	34	34	34	34	34	34	34	34	34	34	34	34	34	34	34	34	34	34	34	34	34	34	34	34	34
				Exposed	34	34	34	34	34	34	34	34	34	34	34	34	34	34	34	34	34	34	34	34	34	34	34	34	34	34	34	34	34	34	34	34	34	34	34	34	34	34	34	34	34	33
		4:12	18.4	Non-Exposed	34	34	34	34	34	34	34	34	34	34	34	34	34	34	34	34	34	34	34	34	34	34	34	34	34	34	34	34	34	34	34	34	34	34	34	34	34	34	34	34	34	34
				Exposed	34	34	34	34	34	34	34	34	34	34	34	34	34	34	34	34	34	34	34	34	34	34	34	34	34	34	34	34	34	34	34	34	34	34	34	34	34	34	34	34	34	33
		5:12	22.6	Non-Exposed	34	34	34	34	34	34	34	34	34	34	34	34	34	34	34	34	34	34	34	34	34	34	34	34	34	34	34	34	34	34	34	34	34	34	34	34	34	34	34	34	34	34
				Exposed	34	34	34	34	34	34	34	34	34	34	34	34	34	34	34	34	34	34	34	34	34	34	34	34	34	34	34	34	34	34	34	34	34	34	34	34	34	34	34	34	34	34
		6:12	26.6	Non-Exposed	35	35	35	35	35	35	35	35	35	35	35	35	35	35	35	35	35	35	35	35	35	35	35	35	35	35	35	35	35	35	35	35	35	35	35	35	35	35	35	35	35	35
				Exposed	35	35	35	35	35	35	35	35	35	35	35	35	35	35	35	35	35	35	35	35	35	35	35	35	35	35	35	35	35	35	35	35	35	35	35	35	35	35	33	35	35	33
		7:12	30.3	Non-Exposed	37	37	37	37	37	37	37	37	37	37	37	37	37	37	37	37	37	37	37	37	37	37	37	37	37	37	37	37	37	37	37	37	37	37	37	37	37	37	37	37	37	37
				Exposed	37	37	37	37	37	37	37	37	37	37	37	37	37	37	37	37	37	37	37	37	37	37	37	37	37	37	37	37	37	37	37	37	37	37	37	37	37	37	37	37	37	37
		8:12	33.7	Non-Exposed	39	39	39	39	39	39	39	39	39	39	39	39	39	39	39	39	39	39	39	39	39	39	39	39	39	39	39	39	39	39	39	39	39	39	39	39	39	39	39	39	39	39
				Exposed	39	39	39	39	39	39	39	39	39	39	39	39	39	39	39	39	39	39	39	39	39	39	39	39	39	39	39	39	39	39	39	39	39	39	39	39	39	39	39	39	39	39
		9:12	36.9	Non-Exposed	40	40	40	40	40	40	40	40	40	40	40	40	40	40	40	40	40	40	40	40	40	40	40	40	40	40	40	40	40	40	40	40	40	40	40	40	40	40	40	40	40	40
				Exposed	40	40	40	40	40	40	40	40	40	40	40	40	40	40	40	40	40	40	40	40	40	40	40	40	40	40	40	40	40	40	40	40	40	40	40	40	40	40	40	40	40	40
		10:12	39.8	Non-Exposed	43	43	43	43	43	43	43	43	43	43	43	43	43	43	43	43	43	43	43	43	43	43	43	43	43	43	43	43	43	43	43	43	43	43	43	43	43	43	43	43	43	43
				Exposed	43	43	43	43	43	43	43	43	43	43	43	43	43	43	43	43	43	43	43	43	43	43	43	43	43	43	43	43	43	43	43	43	43	43	43	43	43	43	42	43	43	40
		11:12	42.5	Non-Exposed	45	45	45	45	45	45	45	45	45	45	45	45	45	45	45	45	45	45	45	45	45	45	45	45	45	45	45	45	45	45	45	45	45	45	45	45	45	45	45	45	45	45
				Exposed	45	45	45	45	45	45	45	45	45	45	45	45	45	45	45	45	45	45	45	45	45	45	45	45	45	45	45	45	45	45	45	45	45	45	45	45	45	45	42	45	45	40
		12:12	45	Non-Exposed	48	48	48	48	48	48	48	48	48	48	48	48	48	48	48	48	48	48	48	48	48	48	48	48	48	48	48	48	48	48	48	48	48	48	48	48	47	47	47	47	47	47
				Exposed	48	48	48	48	48	48	48	48	48	48	48	48	48	48	48	48	48	48	48	48	48	48	48	48	48	48	48	48	48	48	48	48	48	48	48	45	47	47	42	47	45	39
	C	Flat	0	Non-Exposed	40	40	40	40	40	40	40	40	40	40	40	40	40	40	40	40	40	40	40	40	40	40	40	40	40	40	40	40	40	40	40	40	40	40	40	40	40	40	39	40	40	37
				Exposed	40	40	40	40	40	40	40	40	40	40	40	40	40	40	40	40	40	40	40	40	40	40	40	40	40	40	40	40	40	38	40	40	35	40	39	33	40	37	0	40	35	0
		1:12	4.8	Non-Exposed	37	37	37	37	37	37	37	37	37	37	37	37	37	37	37	37	37	37	37	37	37	37	37	37	37	37	37	37	37	37	37	37	37	37	37	37	37	37	37	37	37	37
				Exposed	37	37	37	37	37	37	37	37	37	37	37	37	37	37	37	37	37	37	37	37	37	37	37	37	37	37	37	37	37	37	37	37	35	37	37	33	37	37	0	37	35	0
		2:12	9.5	Non-Exposed	35	35	35	35	35	35	35	35	35	35	35	35	35	35	35	35	35	35	35	35	35	35	35	35	35	35	35	35	35	35	35	35	35	35	35	35	35	35	35	35	35	34
				Exposed	35	35	35	35	35	35	35	35	35	35	35	35	35	35	35	35	35	35	35	35	35	35	35	35	35	35	35	35	35	35	35	35	33	35	34	0	35	0	0	35	0	0
		3:12	14.0	Non-Exposed	34	34	34	34	34	34	34	34	34	34	34	34	34	34	34	34	34	34	34	34	34	34	34	34	34	34	34	34	34	34	34	34	34	34	34	34	34	34	34	34	34	34
				Exposed	34	34	34	34	34	34	34	34	34	34	34	34	34	34	34	34	34	34	34	34	34	34	34	34	34	34	34	34	34	34	34	34	33	34	34	0	34	0	0	34	0	0
		4:12	18.4	Non-Exposed	34	34	34	34	34	34	34	34	34	34	34	34	34	34	34	34	34	34	34	34	34	34	34	34	34	34	34	34	34	34	34	34	34	34	34	34	34	34	34	34	34	34
				Exposed	34	34	34	34	34	34	34	34	34	34	34	34	34	34	34	34	34	34	34	34	34	34	34	34	34	34	34	34	34	34	34	34	33	34	34	0	34	0	0	34	0	0
		5:12	22.6	Non-Exposed	34	34	34	34	34	34	34	34	34	34	34	34	34	34	34	34	34	34	34	34	34	34	34	34	34	34	34	34	34	34	34	34	34	34	34	34	34	34	34	34	34	34
				Exposed	34	34	34	34	34	34	34	34	34	34	34	34	34	34	34	34	34	34	34	34	34	34	34	34	34	34	34	34	34	34	34	34	34	34	34	34	34	34	32	34	34	0
		6:12	26.6	Non-Exposed	35	35	35	35	35	35	35	35	35	35	35	35	35	35	35	35	35	35	35	35	35	35	35	35	35	35	35	35	35	35	35	35	35	35	35	35	35	35	35	35	35	35
				Exposed	35	35	35	35	35	35	35	35	35	35	35	35	35	35	35	35	35	35	35	35	35	35	35	35	35	35	35	35	35	35	35	35	35	35	34	0	35	34	0	35	34	0
		7:12	30.3	Non-Exposed	37	37	37	37	37	37	37	37	37	37	37	37	37	37	37	37	37	37	37	37	37	37	37	37	37	37	37	37	37	37	37	37	37	37	37	37	37	37	37	37	37	37
				Exposed	37	37	37	37	37	37	37	37	37	37	37	37	37	37	37	37	37	37	37	37	37	37	37	37	37	37	37	37	37	37	37	37	37	37	37	37	37	37	35	37	37	33
		8:12	33.7	Non-Exposed	39	39	39	39	39	39	39	39	39	39	39	39	39	39	39	39	39	39	39	39	39	39	39	39	39	39	39	39	39	39	39	39	39	39	39	39	39	39	39	38	38	38
				Exposed	39	39	39	39	39	39	39	39	39	39	39	39	39	39	39	39	39	39	39	39	39	39	39	39	39	39	39	39	39	39	39	39	39	39	37	39	39	35	38	37	33
		9:12	36.9	Non-Exposed	40	40	40	40	40	40	40	40	40	40	40	40	40	40	40	40	40	40	40	40	40	40	40	40	40	40	40	40	40	40	40	40	40	40	40	40	40	40	40	40	40	40
				Exposed	40	40	40	40	40	40	40	40	40	40	40	40	40	40	40	40	40	40	40	40	40	40	40	40	40	40	40	40	40	40	40	40	40	40	37	40	40	35	39	37	33
		10:12	39.8	Non-Exposed	43	43	43	43	43	43	43	43	43	43	43	43	43	43	43	43	43	43	43	43	43	43	43	43	43	43	43	43	43	43	43	43	43	42	42	42	42	42	42	41	41	41
				Exposed	43	43	43	43	43	43	43	43	43	43	43	43	43	43	43	43	43	43	43	43	43	43	43	43	43	43	43	43	43	43	43	40	42	42	37	42	40	35	39	37	33
		11:12	42.5	Non-Exposed	45	45	45	45	45	45	45	45	45	45	45	45	45	45	45	45	45	45	45	45	45	45	45	45	45	45	45	45	45	45	45	45	44	44	44	43	43	43	43	43	41	41
				Exposed	45	45	45	45	45	45	45	45	45	45	45	45	45	45	45	45	45	45	45	45	45	45	45	45	45	45	45	45	45	43	45	45	40	44	42	37	42	39	35	39	37	33
		12:12	45	Non-Exposed	48	48	48	48	48	48	48	48	48	48	48	48	48	48	48	48	48	48	48	48	48	48	48	48	48	48	48	48	48	48	47	47	47	46	46	46	45	45	44	44	44	41
				Exposed	48	48	48	48	48	48	48	48	48	48	48	48	48	48	48	48	48	48	48	48	48	48	48	48	48	53	46	48	48	43	47	45	40	45	42	37	42	39	35	39	37	33
	D	Flat	0	Non-Exposed	40	40	40	40	40	40	40	40	40	40	40	40	40	40	40	40	40	40	40	40	40	40	40	40	40	40	40	40	40	40	40	40	40	40	38	40	40	35	40	40	34
				Exposed	40	40	40	40	40	40	40	40	40	40	40	40	40	40	40	40	40	40	40	40	40	40	40	40	40	37	40	40	35	40	39	33	40	36	0	40	34	0	38	0	0
		1:12	4.8	Non-Exposed	37	37	37	37	37	37	37	37	37	37	37	37	37	37	37	37	37	37	37	37	37	37	37	37	37	37	37	37	37	37	37	37	37	37	37	37	37	35	37	37	34
				Exposed	37	37	37	37	37	37	37	37	37	37	37	37	37	37	37	37	37	37	37	37	37	37	37	37	37	37	37	37	35	37	37	32	37	36	0	37	34	0	37	0	0
		2:12	9.5	Non-Exposed	35	35	35	35	35	35	35	35	35	35	35	35	35	35	35	35	35	35	35	35	35	35	35	35	35	35	35	35	35	35	35	35	35	35	35	35	35	33	35	35	0
				Exposed	35	35	35	35	35	35	35	35	35	35	35	35	35	35	35	35	35	35	35	35	35	35	35	35	35	35	35	33	35	34	0	35	0	0	35	0	0	35	0	0
		3:12	14.0	Non-Exposed	34	34	34	34	34	34	34	34	34	34	34	34	34	34	34	34	34	34	34	34	34	34	34	34	34	34	34	34	34	34	34	34	34	34	34	34	34	33	34	34	0
				Exposed	34	34	34	34	34	34	34	34	34	34	34	34	34	34	34	34	34	34	34	34	34	34	34	34	34	34	34	33	34	34	0	34	0	0	34	0	0	34	0	0
		4:12	18.4	Non-Exposed	34	34	34	34	34	34	34	34	34	34	34	34	34	34	34	34	34	34	34	34	34	34	34	34	34	34	34	34	34	34	34	34	34	34	34	34	34	33	34	34	0
				Exposed	34	34	34	34	34	34	34	34	34	34	34	34	34	34	34	34	34	34	34	34	34	34	34	34	34	34	34	33	34	33	0	34	0	0	34	0	0	34	0	0
		5:12	22.6	Non-Exposed	34	34	34	34	34	34	34	34	34	34	34	34	34	34	34	34	34	34	34	34	34	34	34	34	34	34	34	34	34	34	34	34	34	34	34	34	34	34	34	34	34	34
				Exposed	34	34	34	34	34	34	34	34	34	34	34	34	34	34	34	34	34	34	34	34	34	34	34	34	34	34	34	34	34	34	34	33	34	34	0	34	33	0	34	0	0
		6:12	26.6	Non-Exposed	35	35	35	35	35	35	35	35	35	35	35	35	35	35	35	35	35	35	35	35	35	35	35	35	35	35	35	35	35	35	35	35	35	35	35	35	35	35	35	35	35	34
				Exposed	35	35	35	35	35	35	35	35	35	35	35	35	35	35	35	35	35	35	35	35	35	35	35	35	35	35	35	33	35	34	0	35	0	0	35	0	0	35	0	0
		7:12	30.3	Non-Exposed	37	37	37	37	37	37	37	37	37	37	37	37	37	37	37	37	37	37	37	37	37	37	37	37	37	37	37	37	37	37	37	37	37	37	37	37	37	37	36	36	36
				Exposed	37	37	37	37	37	37	37	37	37	37	37	37	37	37	37	37	37	37	37	37	37	37	37	37	37	37	37	37	37	37	36	37	37	34	37	36	0	36	34	0
		8:12	33.7	Non-Exposed	39	39	39	39	39	39	39	39	39	39	39	39	39	39	39	39	39	39	39	39	39	39	39	39	39	39	39	39	39	39	39	39	39	39	38	38	38	37	37	37	37
				Exposed	39	39	39	39	39	39	39	39	39	39	39	39	39	39	39	39	39	39	39	39	39	39	39	39	39	39	39	39	39	39	39	36	39	39	34	38	36	0	36	34	0
		9:12	36.9	Non-Exposed	40	40	40	40	40	40	40	40	40	40	40	40	40	40	40	40	40	40	40	40	40	40	40	40	40	40	40	40	40	40	40	40	40	40	40	39	39	39	39	39	37
				Exposed	40	40	40	40	40	40	40	40	40	40	40	40	40	40	40	40	40	40	40	40	40	40	40	40	40	40	40	39	40	40	36	40	38	34	38	36	0	36	34	0
		10:12	39.8	Non-Exposed	43	43	43	43	43	43	43	43	43	43	43	43	43	43	43	43	43	43	43	43	43	43	43	43	43	43	43	43	42	42	42	41	41	41	41	41	40	40	40	37
				Exposed	43	43	43	43	43	43	43	43	43	43	43	43	43	43	43	43	43	43	43	43	43	43	43	43	43	42	43	43	39	42	41	36	41	38	34	38	36	0	36	34	0
		11:12	42.5	Non-Exposed	45	45	45	45	45	45	45	45	45	45	45	45	45	45	45	45	45	45	45	45	45	45	45	45	45	45	45	45	45	44	44	44	43	43	42	42	42	40	41	41	37
				Exposed	45	45	45	45	45	45	45	45	45	45	45	45	45	45	45	45	45	45	45	45	45	45	45	45	45	42	45	44	39	43	41	36	41	38	34	38	36	0	36	34	0
		12:12	45	Non-Exposed	48	48	48	48	48	48	48	48	48	48	48	48	48	48	48	48	48	48	48	48	48	48	48	48	47	47	47	46	46	46	46	46	45	45	45	42	44	44	40	43	42	37
				Exposed	48	48	48	48	48	48	48	48	48	48	48	48	48	48	48	48	48	48	48	48	48	48	46	47	47	42	46	44	39	43	41	36	40	38	34	38	36	0	36	34	0

Tamarack 2.3 Rail – Gable Flush-Mount on 30 Foot Maximum Mean Roof Height – Portrait – Panel Length = 68 Inches or Less

Ground Snow Load	Exposure Category	Roof Pitch	Roof Angle	Wind Speed (mph)	95			100			105			110			115			120			125			130			140			150			160			170			180			190		
				Roof Area	1	2	3	1	2	3	1	2	3	1	2	3	1	2	3	1	2	3	1	2	3	1	2	3	1	2	3	1	2	3	1	2	3	1	2	3	1	2	3	1	2	3
90	B	Flat	0	Non-Exposed	38	38	38	38	38	38	38	38	38	38	38	38	38	38	38	38	38	38	38	38	38	38	38	38	38	38	38	38	38	38	38	38	38	38	38	38	38	38	38	38	38	38
				Exposed	38	38	38	38	38	38	38	38	38	38	38	38	38	38	38	38	38	38	38	38	38	38	38	38	38	38	38	38	38	38	38	38	38	38	38	38	38	38	37	38	38	35
		1:12	4.8	Non-Exposed	35	35	35	35	35	35	35	35	35	35	35	35	35	35	35	35	35	35	35	35	35	35	35	35	35	35	35	35	35	35	35	35	35	35	35	35	35	35	35	35	35	35
				Exposed	35	35	35	35	35	35	35	35	35	35	35	35	35	35	35	35	35	35	35	35	35	35	35	35	35	35	35	35	35	35	35	35	35	35	35	35	35	35	35	35	35	35
		2:12	9.5	Non-Exposed	33	33	33	33	33	33	33	33	33	33	33	33	33	33	33	33	33	33	33	33	33	33	33	33	33	33	33	33	33	33	33	33	33	33	33	33	33	33	33	33	33	33
				Exposed	33	33	33	33	33	33	33	33	33	33	33	33	33	33	33	33	33	33	33	33	33	33	33	33	33	33	33	33	33	33	33	33	33	33	33	33	33	33	33	33	33	33
		3:12	14.0	Non-Exposed	32	32	32	32	32	32	32	32	32	32	32	32	32	32	32	32	32	32	32	32	32	32	32	32	32	32	32	32	32	32	32	32	32	32	32	32	32	32	32	32	32	32
				Exposed	32	32	32	32	32	32	32	32	32	32	32	32	32	32	32	32	32	32	32	32	32	32	32	32	32	32	32	32	32	32	32	32	32	32	32	32	32	32	32	32	32	32
		4:12	18.4	Non-Exposed	32	32	32	32	32	32	32	32	32	32	32	32	32	32	32	32	32	32	32	32	32	32	32	32	32	32	32	32	32	32	32	32	32	32	32	32	32	32	32	32	32	32
				Exposed	32	32	32	32	32	32	32	32	32	32	32	32	32	32	32	32	32	32	32	32	32	32	32	32	32	32	32	32	32	32	32	32	32	32	32	32	32	32	32	32	32	32
		5:12	22.6	Non-Exposed	32	32	32	32	32	32	32	32	32	32	32	32	32	32	32	32	32	32	32	32	32	32	32	32	32	32	32	32	32	32	32	32	32	32	32	32	32	32	32	32	32	32
				Exposed	32	32	32	32	32	32	32	32	32	32	32	32	32	32	32	32	32	32	32	32	32	32	32	32	32	32	32	32	32	32	32	32	32	32	32	32	32	32	32	32	32	32
		6:12	26.6	Non-Exposed	33	33	33	33	33	33	33	33	33	33	33	33	33	33	33	33	33	33	33	33	33	33	33	33	33	33	33	33	33	33	33	33	33	33	33	33	33	33	33	33	33	33
				Exposed	33	33	33	33	33	33	33	33	33	33	33	33	33	33	33	33	33	33	33	33	33	33	33	33	33	33	33	33	33	33	33	33	33	33	33	33	33	33	33	33	33	33
		7:12	30.3	Non-Exposed	35	35	35	35	35	35	35	35	35	35	35	35	35	35	35	35	35	35	35	35	35	35	35	35	35	35	35	35	35	35	35	35	35	35	35	35	35	35	35	35	35	35
				Exposed	35	35	35	35	35	35	35	35	35	35	35	35	35	35	35	35	35	35	35	35	35	35	35	35	35	35	35	35	35	35	35	35	35	35	35	35	35	35	35	35	35	35
		8:12	33.7	Non-Exposed	36	36	36	36	36	36	36	36	36	36	36	36	36	36	36	36	36	36	36	36	36	36	36	36	36	36	36	36	36	36	36	36	36	36	36	36	36	36	36	36	36	36
				Exposed	36	36	36	36	36	36	36	36	36	36	36	36	36	36	36	36	36	36	36	36	36	36	36	36	36	36	36	36	36	36	36	36	36	36	36	36	36	36	35	36	36	33
		9:12	36.9	Non-Exposed	38	38	38	38	38	38	38	38	38	38	38	38	38	38	38	38	38	38	38	38	38	38	38	38	38	38	38	38	38	38	38	38	38	38	38	38	38	38	38	38	38	38
				Exposed	38	38	38	38	38	38	38	38	38	38	38	38	38	38	38	38	38	38	38	38	38	38	38	38	38	38	38	38	38	38	38	38	38	38	37	38	38	35	38	37	33
		10:12	39.8	Non-Exposed	40	40	40	40	40	40	40	40	40	40	40	40	40	40	40	40	40	40	40	40	40	40	40	40	40	40	40	40	40	40	40	40	40	40	40	40	40	40	39	39	39	39
				Exposed	40	40	40	40	40	40	40	40	40	40	40	40	40	40	40	40	40	40	40	40	40	40	40	40	40	40	40	40	40	40	40	40	40	40	37	40	40	35	39	37	33
		11:12	42.5	Non-Exposed	43	43	43	43	43	43	43	43	43	43	43	43	43	43	43	43	43	43	43	43	43	43	43	43	43	43	43	43	43	43	43	43	42	42	42	42	42	42	41	41	41	41
				Exposed	43	43	43	43	43	43	43	43	43	43	43	43	43	43	43	43	43	43	43	43	43	43	43	43	43	43	43	43	43	43	43	40	42	42	37	42	39	35	39	37	33
		12:12	45	Non-Exposed	45	45	45	45	45	45	45	45	45	45	45	45	45	45	45	45	45	45	45	45	45	45	45	45	45	45	45	45	45	45	45	45	44	44	44	43	43	43	43	43	41	41
				Exposed	45	45	45	45	45	45	45	45	45	45	45	45	45	45	45	45	45	45	45	45	45	45	45	45	45	45	45	45	45	45	40	44	42	37	42	39	35	39	37	33	41	33
	C	Flat	0	Non-Exposed	38	38	38	38	38	38	38	38	38	38	38	38	38	38	38	38	38	38	38	38	38	38	38	38	38	38	38	38	38	38	38	38	38	38	38	38	38	38	38	38	38	37
				Exposed	38	38	38	38	38	38	38	38	38	38	38	38	38	38	38	38	38	38	38	38	38	38	38	38	38	38	38	38	38	35	38	38	33	38	37	0	38	35	0	38	35	0
		1:12	4.8	Non-Exposed	35	35	35	35	35	35	35	35	35	35	35	35	35	35	35	35	35	35	35	35	35	35	35	35	35	35	35	35	35	35	35	35	35	35	35	35	35	35	35	35	35	35
				Exposed	35	35	35	35	35	35	35	35	35	35	35	35	35	35	35	35	35	35	35	35	35	35	35	35	35	35	35	35	35	35	35	35	33	35	35	0	35	35	0	35	35	0
		2:12	9.5	Non-Exposed	33	33	33	33	33	33	33	33	33	33	33	33	33	33	33	33	33	33	33	33	33	33	33	33	33	33	33	33	33	33	33	33	33	33	33	33	33	33	33	33	33	33
				Exposed	33	33	33	33	33	33	33	33	33	33	33	33	33	33	33	33	33	33	33	33	33	33	33	33	33	33	33	33	33	33	33	33	0	33	0	0	33	0	0	33	0	0
		3:12	14.0	Non-Exposed	32	32	32	32	32	32	32	32	32	32	32	32	32	32	32	32	32	32	32	32	32	32	32	32	32	32	32	32	32	32	32	32	32	32	32	32	32	32	32	32	32	32
				Exposed	32	32	32	32	32	32	32	32	32	32	32	32	32	32	32	32	32	32	32	32	32	32	32	32	32	32	32	32	32	32	32	32	0	32	0	0	32	0	0	32	0	0
		4:12	18.4	Non-Exposed	32	32	32	32	32	32	32	32	32	32	32	32	32	32	32	32	32	32	32	32	32	32	32	32	32	32	32	32	32	32	32	32	32	32	32	32	32	32	32	32	32	32
				Exposed	32	32	32	32	32	32	32	32	32	32	32	32	32	32	32	32	32	32	32	32	32	32	32	32	32	32	32	32	32	32	32	32	0	32	0	0	32	0	0	32	0	0
		5:12	22.6	Non-Exposed	32	32	32	32	32	32	32	32	32	32	32	32	32	32	32	32	32	32	32	32	32	32	32	32	32	32	32	32	32	32	32	32	32	32	32	32	32	32	32	32	32	32
				Exposed	32	32	32	32	32	32	32	32	32	32	32	32	32	32	32	32	32	32	32	32	32	32	32	32	32	32	32	32	32	32	32	32	32	32	32	0	32	32	0	32	0	0
		6:12	26.6	Non-Exposed	33	33	33	33	33	33	33	33	33	33	33	33	33	33	33	33	33	33	33	33	33	33	33	33	33	33	33	33	33	33	33	33	33	33	33	33	33	33	33	33	33	33
				Exposed	33	33	33	33	33	33	33	33	33	33	33	33	33	33	33	33	33	33	33	33	33	33	33	33	33	33	33	33	33	33	33	33	33	33	33	0	33	0	0	33	0	0
		7:12	30.3	Non-Exposed	35	35	35	35	35	35	35	35	35	35	35	35	35	35	35	35	35	35	35	35	35	35	35	35	35	35	35	35	35	35	35	35	35	35	35	35	35	35	35	35	35	35
				Exposed	35	35	35	35	35	35	35	35	35	35	35	35	35	35	35	35	35	35	35	35	35	35	35	35	35	35	35	35	35	35	35	35	35	35	35	35	35	35	35	35	35	33
		8:12	33.7	Non-Exposed	36	36	36	36	36	36	36	36	36	36	36	36	36	36	36	36	36	36	36	36	36	36	36	36	36	36	36	36	36	36	36	36	36	36	36	36	36	36	36	36	36	36
				Exposed	36	36	36	36	36	36	36	36	36	36	36	36	36	36	36	36	36	36	36	36	36	36	36	36	36	36	36	36	36	36	36	36	36	36	36	35	36	36	35	36	36	33
		9:12	36.9	Non-Exposed	38	38	38	38	38	38	38	38	38	38	38	38	38	38	38	38	38	38	38	38	38	38	38	38	38	38	38	38	38	38	38	38	38	38	38	38	38	38	38	38	38	38
				Exposed	38	38	38	38	38	38	38	38	38	38	38	38	38	38	38	38	38	38	38	38	38	38	38	38	38	38	38	38	38	38	38	38	37	38	38	35	38	37	33	38	37	33
		10:12	39.8	Non-Exposed	40	40	40	40	40	40	40	40	40	40	40	40	40	40	40	40	40	40	40	40	40	40	40	40	40	40	40	40	40	40	40	40	40	40	40	40	40	40	39	39	39	39
				Exposed	40	40	40	40	40	40	40	40	40	40	40	40	40	40	40	40	40	40	40	40	40	40	40	40	40	40	40	40	40	40	40	40	40	40	37	40	40	35	39	37	33	41
		11:12	42.5	Non-Exposed	43	43	43	43	43	43	43	43	43	43	43	43	43	43	43	43	43	43	43	43	43	43	43	43	43	43	43	43	43	43	43	43	42	42	42	42	42	42	41	41	41	41
				Exposed	43	43	43	43	43	43	43	43	43	43	43	43	43	43	43	43	43	43	43	43	43	43	43	43	43	43	43	43	43	43	43	40	42	42	37	42	39	35	39	37	33	41
		12:12	45	Non-Exposed	45	45	45	45	45	45	45	45	45	45	45	45	45	45	45	45	45	45	45	45	45	45	45	45	45	45	45	45	45	45	45	45	44	44	44	43	43	43	43	43	41	41
				Exposed	45	45	45	45	45	45	45	45	45	45	45	45	45	45	45	45	45	45	45	45	45	45	45	45	45	45	45	45	45	45	40	44	42	37	42	39	35	39	37	33	41	33
	D	Flat	0	Non-Exposed	38	38	38	38	38	38	38	38	38	38	38	38	38	38	38	38	38	38	38	38	38	38	38	38	38	38	38	38	38	38	38	38	38	38	38	38	38	38	38	38	38	34
				Exposed	38	38	38	38	38	38	38	38	38	38	38	38	38	38	38	38	38	38	38	38	38	38	38	38	38	38	37	38	38	35	38	38	33	38	36	0	38	34	0	38	0	0
		1:12	4.8	Non-Exposed	35	35	35	35	35	35	35	35	35	35	35	35	35	35	35	35	35	35	35	35	35	35	35	35	35	35	35	35	35	35	35	35	35	35	35	35	35	35	35	35	35	34
				Exposed	35	35	35	35	35	35	35	35	35	35	35	35	35	35	35	35	35	35	35	35	35	35	35	35	35	35	35	35	35	35	35	32	35	35	0	35	34	0	35	0	0	0
		2:12	9.5	Non-Exposed	33	33	33	33	33	33	33	33	33	33	33	33	33	33	33	33	33	33	33	33	33	33	33	33	33	33	33	33	33	33	33	33	33	33	33	33	33	33	33	33	33	0
				Exposed	33	33	33	33	33	33	33	33	33	33	33	33	33	33	33	33	33	33	33	33	33	33	33	33	33	33	33	33	33	33	33	0	33	0	0	33	0	0	33	0	0	0
		3:12	14.0	Non-Exposed	32	32	32	32	32	32	32	32	32	32	32	32	32	32	32	32	32	32	32	32	32	32	32	32	32	32	32	32	32	32	32	32	32	32	32	32	32	32	32	32	32	0
				Exposed	32	32	32	32	32	32	32	32	32	32	32	32	32	32	32	32	32	32	32	32	32	32	32	32	32	32	32	32	32	32	32	32	0	32	0	0	32	0	0	32	0	0
		4:12	18.4	Non-Exposed	32	32	32	32	32	32	32	32	32	32	32	32	32	32	32	32	32	32	32	32	32	32	32	32	32	32	32	32	32	32	32	32	32	32	32	32	32	32	32	32	32	0
				Exposed	32	32	32	32	32	32	32	32	32	32	32	32	32	32	32	32	32	32	32	32	32	32	32	32	32	32	32	32	32	32	32	0	32	0	0	32	0	0	32	0	0	0
		5:12	22.6	Non-Exposed	32	32	32	32	32	32	32	32	32	32	32	32	32	32	32	32	32	32	32	32	32	32	32	32	32	32	32	32	32	32	32	32	32	32	32	32	32	32	32	32	32	32
				Exposed	32	32	32	32	32	32	32	32	32	32	32	32	32	32	32	32	32	32	32	32	32	32	32	32	32	32	32	32	32	32	32	32	32	32	0	32	32	0	32	0	0	0
		6:12	26.6	Non-Exposed	33	33	33	33	33	33	33	33	33	33	33	33	33	33	33	33	33	33	33	33	33	33	33	33	33	33	33	33	33	33	33	33	33	33	33	33	33	33	33	33	33	33
				Exposed	33	33	33	33	33	33	33	33	33	33	33	33	33	33	33	33	33	33	33	33	33	33	33	33	33	33	33	33	33	33	33	33	33	33	0	33	0	0	33	0	0	0
		7:12	30.3	Non-Exposed	35	35	35	35	35	35	35	35	35	35	35	35	35	35	35	35	35	35	35	35	35	35	35	35	35	35	35	35	35	35	35	35	35	35	35	35	35	35	35	35	35	35
				Exposed	35	35	35	35	35	35	35	35	35	35	35	35	35	35	35	35	35	35	35	35	35	35	35	35	35	35	35	35	35	35	35	35	35	35	34	35	35	0	35	34	0	0
		8:12	33.7	Non-Exposed	36	36	36	36	36	36	36	36	36	36	36	36	36	36	36	36	36	36	36	36	36	36	36	36	36	36	36	36	36	36	36	36	36	36	36	36	36	36	36	36	36	36
				Exposed	36	36	36	36	36	36	36	36	36	36	36	36	36	36	36	36	36	36	36	36	36	36	36	36	36	36	36	36	36	36	36	36	36	36	34	36	36	0	36	34	0	0
		9:12	36.9	Non-Exposed	38	38	38	38	38	38	38	38	38	38	38	38	38	38	38	38	38	38	38	38	38	38	38	38	38	38	38	38	38	38	38	38	38	38	38	38	38	38	37	37	37	37
				Exposed	38	38	38	38	38	38	38	38	38	38	38	38	38	38	38	38	38	38	38	38	38	38	38	38	38	38	38	38	38	38	38	38	38	38	34	38	36	0	36	34	0	0
		10:12	39.8	Non-Exposed	40	40	40	40	40	40	40	40	40	40	40	40	40	40	40	40	40	40	40	40	40	40	40	40	40	40	40	40	40	40	40	40	40	40	40	40	39	39	39	38	38	37
				Exposed	40	40	40	40	40	40	40	40	40	40	40	40	40	40	40	40	40	40	40	40	40	40	40	40	40	40	40	40	40	39	40	40	36	40	38	34	38	36	0	36	34	0
		11:12	42.5	Non-Exposed	43	43	43	43	43	43	43	43	43	43	43	43	43	43	43	43	43	43	43	43	43	43	43	43	43	43	43	43	43	42	42	42	41	41	41	41	41	40	40	40	37	37
				Exposed	43	43	43	43	43	43	43	43	43	43	43	43	43	43	43	43	43	43	43	43	43	43	43	43	43	43	43	42	43	43	39	42	41	36	41	38	34	38	36	0	36	34	0
		12:12	45	Non-Exposed	45	45	45	45	45	45	45	45	45	45	45	45	45	45	45	45	45	45	45	45	45	45	45	45	45	45	45	45	45	45	44	44	44	43	43	42	42	42	40	41	41	37
				Exposed	45	45	45	45	45	45	45	45	45	45	45	45	45	45	45	45	45	45	45	45	45	45	45	45	45	45	42	45	44	39	43	41	36	40	38	34	38	36	0	36	34	0

Tamarack 2.3 Rail – Gable Flush-Mount on 30 Foot Maximum Mean Roof Height – Portrait – Panel Length = 68 Inches or Less

Ground Snow Load	Exposure Category	Roof Pitch	Roof Angle	Wind Speed (mph)	95			100			105			110			115			120			125			130			140			150			160			170			180			190		
				Roof Area	1	2	3	1	2	3	1	2	3	1	2	3	1	2	3	1	2	3	1	2	3	1	2	3	1	2	3	1	2	3	1	2	3	1	2	3	1	2	3	1	2	3
		Flat	0	Non-Exposed	36	36	36	36	36	36	36	36	36	36	36	36	36	36	36	36	36	36	36	36	36	36	36	36	36	36	36	36	36	36	36	36	36	36	36	36	36	36	36	36	36	36
				Exposed	36	36	36	36	36	36	36	36	36	36	36	36	36	36	36	36	36	36	36	36	36	36	36	36	36	36	36	36	36	36	36	36	36	36	36	36	36	36	36	36	36	35
		1:12	4.8	Non-Exposed	33	33	33	33	33	33	33	33	33	33	33	33	33	33	33	33	33	33	33	33	33	33	33	33	33	33	33	33	33	33	33	33	33	33	33	33	33	33	33	33	33	33
				Exposed	33	33	33	33	33	33	33	33	33	33	33	33	33	33	33	33	33	33	33	33	33	33	33	33	33	33	33	33	33	33	33	33	33	33	33	33	33	33	33	33	33	33
		2:12	9.5	Non-Exposed	31	31	31	31	31	31	31	31	31	31	31	31	31	31	31	31	31	31	31	31	31	31	31	31	31	31	31	31	31	31	31	31	31	31	31	31	31	31	31	31	31	31
				Exposed	31	31	31	31	31	31	31	31	31	31	31	31	31	31	31	31	31	31	31	31	31	31	31	31	31	31	31	31	31	31	31	31	31	31	31	31	31	31	31	31	31	31
		3:12	14.0	Non-Exposed	30	30	30	30	30	30	30	30	30	30	30	30	30	30	30	30	30	30	30	30	30	30	30	30	30	30	30	30	30	30	30	30	30	30	30	30	30	30	30	30	30	30
				Exposed	30	30	30	30	30	30	30	30	30	30	30	30	30	30	30	30	30	30	30	30	30	30	30	30	30	30	30	30	30	30	30	30	30	30	30	30	30	30	30	30	30	30
		4:12	18.4	Non-Exposed	30	30	30	30	30	30	30	30	30	30	30	30	30	30	30	30	30	30	30	30	30	30	30	30	30	30	30	30	30	30	30	30	30	30	30	30	30	30	30	30	30	30
				Exposed	30	30	30	30	30	30	30	30	30	30	30	30	30	30	30	30	30	30	30	30	30	30	30	30	30	30	30	30	30	30	30	30	30	30	30	30	30	30	30	30	30	30
		5:12	22.6	Non-Exposed	31	31	31	31	31	31	31	31	31	31	31	31	31	31	31	31	31	31	31	31	31	31	31	31	31	31	31	31	31	31	31	31	31	31	31	31	31	31	31	31	31	31
				Exposed	31	31	31	31	31	31	31	31	31	31	31	31	31	31	31	31	31	31	31	31	31	31	31	31	31	31	31	31	31	31	31	31	31	31	31	31	31	31	31	31	31	31
	B	6:12	26.6	Non-Exposed	32	32	32	32	32	32	32	32	32	32	32	32	32	32	32	32	32	32	32	32	32	32	32	32	32	32	32	32	32	32	32	32	32	32	32	32	32	32	32	32	32	32
				Exposed	32	32	32	32	32	32	32	32	32	32	32	32	32	32	32	32	32	32	32	32	32	32	32	32	32	32	32	32	32	32	32	32	32	32	32	32	32	32	32	32	32	32
		7:12	30.3	Non-Exposed	33	33	33	33	33	33	33	33	33	33	33	33	33	33	33	33	33	33	33	33	33	33	33	33	33	33	33	33	33	33	33	33	33	33	33	33	33	33	33	33	33	33
				Exposed	33	33	33	33	33	33	33	33	33	33	33	33	33	33	33	33	33	33	33	33	33	33	33	33	33	33	33	33	33	33	33	33	33	33	33	33	33	33	33	33	33	33
		8:12	33.7	Non-Exposed	35	35	35	35	35	35	35	35	35	35	35	35	35	35	35	35	35	35	35	35	35	35	35	35	35	35	35	35	35	35	35	35	35	35	35	35	35	35	35	35	35	35
				Exposed	35	35	35	35	35	35	35	35	35	35	35	35	35	35	35	35	35	35	35	35	35	35	35	35	35	35	35	35	35	35	35	35	35	35	35	35	35	35	35	35	35	35
		9:12	36.9	Non-Exposed	36	36	36	36	36	36	36	36	36	36	36	36	36	36	36	36	36	36	36	36	36	36	36	36	36	36	36	36	36	36	36	36	36	36	36	36	36	36	36	36	36	36
				Exposed	36	36	36	36	36	36	36	36	36	36	36	36	36	36	36	36	36	36	36	36	36	36	36	36	36	36	36	36	36	36	36	36	36	36	36	36	36	36	35	36	36	33
		10:12	39.8	Non-Exposed	38	38	38	38	38	38	38	38	38	38	38	38	38	38	38	38	38	38	38	38	38	38	38	38	38	38	38	38	38	38	38	38	38	38	38	38	38	38	38	38	38	38
				Exposed	38	38	38	38	38	38	38	38	38	38	38	38	38	38	38	38	38	38	38	38	38	38	38	38	38	38	38	38	38	37	38	38	35	38	37	33	38	37	33	38	37	33
		11:12	42.5	Non-Exposed	40	40	40	40	40	40	40	40	40	40	40	40	40	40	40	40	40	40	40	40	40	40	40	40	40	40	40	40	40	40	40	40	40	40	40	40	40	40	40	40	40	40
				Exposed	40	40	40	40	40	40	40	40	40	40	40	40	40	40	40	40	40	40	40	40	40	40	40	40	40	40	40	40	40	37	40	39	35	39	37	33	39	37	33	39	37	33
		12:12	45	Non-Exposed	43	43	43	43	43	43	43	43	43	43	43	43	43	43	43	43	43	43	43	43	43	43	43	43	43	43	43	43	43	43	43	43	43	43	43	42	42	42	41	41	41	41
				Exposed	43	43	43	43	43	43	43	43	43	43	43	43	43	43	43	43	43	43	43	43	43	43	43	43	53	43	43	43	43	43	43	40	43	42	37	42	39	35	39	37	33	37	33
		Flat	0	Non-Exposed	36	36	36	36	36	36	36	36	36	36	36	36	36	36	36	36	36	36	36	36	36	36	36	36	36	36	36	36	36	36	36	36	36	36	36	36	36	36	35	36	36	34
				Exposed	36	36	36	36	36	36	36	36	36	36	36	36	36	36	36	36	36	36	36	36	36	36	36	36	36	36	36	36	36	35	36	36	33	36	36	0	36	34	0	36	0	0
		1:12	4.8	Non-Exposed	33	33	33	33	33	33	33	33	33	33	33	33	33	33	33	33	33	33	33	33	33	33	33	33	33	33	33	33	33	33	33	33	33	33	33	33	33	33	33	33	33	33
				Exposed	33	33	33	33	33	33	33	33	33	33	33	33	33	33	33	33	33	33	33	33	33	33	33	33	33	33	33	33	33	32	33	33	0	33	33	0	33	0	0	33	0	0
		2:12	9.5	Non-Exposed	31	31	31	31	31	31	31	31	31	31	31	31	31	31	31	31	31	31	31	31	31	31	31	31	31	31	31	31	31	31	31	31	31	31	31	31	31	31	31	31	31	0
				Exposed	31	31	31	31	31	31	31	31	31	31	31	31	31	31	31	31	31	31	31	31	31	31	31	31	31	31	31	31	31	0	31	0	0	31	0	0	31	0	0	31	0	0
		3:12	14.0	Non-Exposed	30	30	30	30	30	30	30	30	30	30	30	30	30	30	30	30	30	30	30	30	30	30	30	30	30	30	30	30	30	30	30	30	30	30	30	30	30	30	30	30	30	0
				Exposed	30	30	30	30	30	30	30	30	30	30	30	30	30	30	30	30	30	30	30	30	30	30	30	30	30	30	30	30	30	0	30	0	0	30	0	0	30	0	0	30	0	0
		4:12	18.4	Non-Exposed	30	30	30	30	30	30	30	30	30	30	30	30	30	30	30	30	30	30	30	30	30	30	30	30	30	30	30	30	30	30	30	30	30	30	30	30	30	30	30	30	30	0
				Exposed	30	30	30	30	30	30	30	30	30	30	30	30	30	30	30	30	30	30	30	30	30	30	30	30	30	30	30	30	30	0	30	0	0	30	0	0	30	0	0	30	0	0
		5:12	22.6	Non-Exposed	31	31	31	31	31	31	31	31	31	31	31	31	31	31	31	31	31	31	31	31	31	31	31	31	31	31	31	31	31	31	31	31	31	31	31	31	31	31	31	31	31	31
				Exposed	31	31	31	31	31	31	31	31	31	31	31	31	31	31	31	31	31	31	31	31	31	31	31	31	31	31	31	31	31	31	31	31	31	31	31	31	31	31	31	31	31	0
100	C	6:12	26.6	Non-Exposed	32	32	32	32	32	32	32	32	32	32	32	32	32	32	32	32	32	32	32	32	32	32	32	32	32	32	32	32	32	32	32	32	32	32	32	32	32	32	32	32	32	32
				Exposed	32	32	32	32	32	32	32	32	32	32	32	32	32	32	32	32	32	32	32	32	32	32	32	32	32	32	32	32	32	32	32	32	32	32	32	32	32	32	0	32	32	0
		7:12	30.3	Non-Exposed	33	33	33	33	33	33	33	33	33	33	33	33	33	33	33	33	33	33	33	33	33	33	33	33	33	33	33	33	33	33	33	33	33	33	33	33	33	33	33	33	33	33
				Exposed	33	33	33	33	33	33	33	33	33	33	33	33	33	33	33	33	33	33	33	33	33	33	33	33	33	33	33	33	33	33	33	33	33	33	33	33	33	33	33	33	33	33
		8:12	33.7	Non-Exposed	35	35	35	35	35	35	35	35	35	35	35	35	35	35	35	35	35	35	35	35	35	35	35	35	35	35	35	35	35	35	35	35	35	35	35	35	35	35	35	35	35	35
				Exposed	35	35	35	35	35	35	35	35	35	35	35	35	35	35	35	35	35	35	35	35	35	35	35	35	35	35	35	35	35	35	35	35	35	35	35	35	35	35	35	35	35	33
		9:12	36.9	Non-Exposed	36	36	36	36	36	36	36	36	36	36	36	36	36	36	36	36	36	36	36	36	36	36	36	36	36	36	36	36	36	36	36	36	36	36	36	36	36	36	36	36	36	36
				Exposed	36	36	36	36	36	36	36	36	36	36	36	36	36	36	36	36	36	36	36	36	36	36	36	36	36	36	36	36	36	36	36	36	36	36	36	36	36	36	35	36	36	33
		10:12	39.8	Non-Exposed	38	38	38	38	38	38	38	38	38	38	38	38	38	38	38	38	38	38	38	38	38	38	38	38	38	38	38	38	38	38	38	38	38	38	38	38	38	38	38	38	38	38
				Exposed	38	38	38	38	38	38	38	38	38	38	38	38	38	38	38	38	38	38	38	38	38	38	38	38	38	38	38	38	38	37	38	38	35	38	37	33	38	37	33	38	37	33
		11:12	42.5	Non-Exposed	40	40	40	40	40	40	40	40	40	40	40	40	40	40	40	40	40	40	40	40	40	40	40	40	40	40	40	40	40	40	40	40	40	40	40	40	40	40	40	40	40	40
				Exposed	40	40	40	40	40	40	40	40	40	40	40	40	40	40	40	40	40	40	40	40	40	40	40	40	40	40	40	40	40	37	40	39	35	39	37	33	39	37	33	39	37	33
		12:12	45	Non-Exposed	43	43	43	43	43	43	43	43	43	43	43	43	43	43	43	43	43	43	43	43	43	43	43	43	43	43	43	43	43	43	43	43	43	43	43	42	42	42	41	41	41	41
				Exposed	43	43	43	43	43	43	43	43	43	43	43	43	43	43	43	43	43	43	43	43	43	43	43	43	53	43	43	43	43	43	43	40	43	42	37	42	39	35	39	37	33	37	33
		Flat	0	Non-Exposed	36	36	36	36	36	36	36	36	36	36	36	36	36	36	36	36	36	36	36	36	36	36	36	36	36	36	36	36	36	36	36	36	36	36	36	36	36	36	35	36	36	34
				Exposed	36	36	36	36	36	36	36	36	36	36	36	36	36	36	36	36	36	36	36	36	36	36	36	36	36	36	36	36	36	35	36	36	33	36	36	0	36	34	0	36	0	0
		1:12	4.8	Non-Exposed	33	33	33	33	33	33	33	33	33	33	33	33	33	33	33	33	33	33	33	33	33	33	33	33	33	33	33	33	33	33	33	33	33	33	33	33	33	33	33	33	33	33
				Exposed	33	33	33	33	33	33	33	33	33	33	33	33	33	33	33	33	33	33	33	33	33	33	33	33	33	33	33	33	33	32	33	33	0	33	33	0	33	0	0	33	0	0
		2:12	9.5	Non-Exposed	31	31	31	31	31	31	31	31	31	31	31	31	31	31	31	31	31	31	31	31	31	31	31	31	31	31	31	31	31	31	31	31	31	31	31	31	31	31	31	31	31	0
				Exposed	31	31	31	31	31	31	31	31	31	31	31	31	31	31	31	31	31	31	31	31	31	31	31	31	31	31	31	31	31	0	31	0	0	31	0	0	31	0	0	31	0	0
		3:12	14.0	Non-Exposed	30	30	30	30	30	30	30	30	30	30	30	30	30	30	30	30	30	30	30	30	30	30	30	30	30	30	30	30	30	30	30	30	30	30	30	30	30	30	30	30	30	0
				Exposed	30	30	30	30	30	30	30	30	30	30	30	30	30	30	30	30	30	30	30	30	30	30	30	30	30	30	30	30	30	0	30	0	0	30	0	0	30	0	0	30	0	0
		4:12	18.4	Non-Exposed	30	30	30	30	30	30	30	30	30	30	30	30	30	30	30	30	30	30	30	30	30	30	30	30	30	30	30	30	30	30	30	30	30	30	30	30	30	30	30	30	30	0
				Exposed	30	30	30	30	30	30	30	30	30	30	30	30	30	30	30	30	30	30	30	30	30	30	30	30	30	30	30	30	30	0	30	0	0	30	0	0	30	0	0	30	0	0
		5:12	22.6	Non-Exposed	31	31	31	31	31	31	31	31	31	31	31	31	31	31	31	31	31	31	31	31	31	31	31	31	31	31	31	31	31	31	31	31	31	31	31	31	31	31	31	31	31	31
				Exposed	31	31	31	31	31	31	31	31	31	31	31	31	31	31	31	31	31	31	31	31	31	31	31	31	31	31	31	31	31	0	31	31	0	31	0	0	31	0	0	31	0	0
	D	6:12	26.6	Non-Exposed	32	32	32	32	32	32	32	32	32	32	32	32	32	32	32	32	32	32	32	32	32	32	32	32	32	32	32	32	32	32	32	32	32	32	32	32	32	32	32	32	32	32
				Exposed	32	32	32	32	32	32	32	32	32	32	32	32	32	32	32	32	32	32	32	32	32	32	32	32	32	32	32	32	32	0	32	0	0	32	0	0	32	0	0	32	0	0
		7:12	30.3	Non-Exposed	33	33	33	33	33	33	33	33	33	33	33	33	33	33	33	33	33	33	33	33	33	33	33	33	33	33	33	33	33	33	33	33	33	33	33	33	33	33	33	33	33	33
				Exposed	33	33	33	33	33	33	33	33	33	33	33	33	33	33	33	33	33	33	33	33	33	33	33	33	33	33	33	33	33	33	33	33	33	33	33	33	33	33	0	33	33	0
		8:12	33.7	Non-Exposed	35	35	35	35	35	35	35	35	35	35	35	35	35	35	35	35	35	35	35	35	35	35	35	35	35	35	35	35	35	35	35	35	35	35	35	35	35	35	35	35	35	35
				Exposed	35	35	35	35	35	35	35	35	35	35	35	35	35	35	35	35	35	35	35	35	35	35	35	35	35	35	35	35	35	34	35	35	0	35	34	0	35	34	0	35	34	0
		9:12	36.9	Non-Exposed	36	36	36	36	36	36	36	36	36	36	36	36	36	36	36	36	36	36	36	36	36	36	36	36	36	36	36	36	36	36	36	36	36	36	36	36	36	36	36	36	36	36
				Exposed	36	36	36	36	36	36	36	36	36	36	36	36	36	36	36	36	36	36	36	36	36	36	36	36	36	36	36	36	36	34	36	36	0	36	34	0	36	34	0	36	34	0
		10:12	39.8	Non-Exposed	38	38	38	38	38	38	38	38	38	38	38	38	38	38	38	38	38	38	38	38	38	38	38	38	38	38	38	38	38	38	38	38	38	38	38	38	38	38	37	37	37	37
				Exposed	38	38	38	38	38	38	38	38	38	38	38	38	38	38	38	38	38	38	38	38	38	38	38	38	38	38	38	38	36	38	38	34	38	36	0	36	34	0	36	34	0
		11:12	42.5	Non-Exposed	40	40	40	40	40	40	40	40	40	40	40	40	40	40	40	40	40	40	40	40	40	40	40	40	40	40	40	40	40	40	40	39	39	39	39	39	37					
				Exposed	40	40	40	40	40	40	40	40	40	40	40	40	40	40	40	40	40	40	40	40	40	40	40	40	40	40	40	40	36	40	38	34	38	36	0	36	34	0				
		12:12	45	Non-Exposed	43	43	43	43	43	43	43	43	43	43	43	43	43	43	43	43	43	43	43	43	43	43	43	43	43	43	43	43	42	42	42	42	42	42	41	41	40	40	40	37		
				Exposed	43	43	43	43	43	43	43	43	43	43	43	43	43	43	43	43	43	43	43	43	43	43	43	43	43	43	42	43	43	39	42	41	36	40	38	34	38	36	0	36	34	0

Tamarack 2.3 Rail – Gable Flush-Mount on 30 Foot Maximum Mean Roof Height – Portrait – Panel Length = 68 Inches or Less

Ground Snow Load	Exposure Category	Roof Pitch	Roof Angle	Wind Speed (mph)	95			100			105			110			115			120			125			130			140			150			160			170			180			190		
				Roof Area	1	2	3	1	2	3	1	2	3	1	2	3	1	2	3	1	2	3	1	2	3	1	2	3	1	2	3	1	2	3	1	2	3	1	2	3	1	2	3	1	2	3
110	B	Flat	0	Non-Exposed	34	34	34	34	34	34	34	34	34	34	34	34	34	34	34	34	34	34	34	34	34	34	34	34	34	34	34	34	34	34	34	34	34	34	34	34	34	34	34	34	34	34
				Exposed	34	34	34	34	34	34	34	34	34	34	34	34	34	34	34	34	34	34	34	34	34	34	34	34	34	34	34	34	34	34	34	34	34	34	34	34	34	34	34	34	34	34
		1:12	4.8	Non-Exposed	32	32	32	32	32	32	32	32	32	32	32	32	32	32	32	32	32	32	32	32	32	32	32	32	32	32	32	32	32	32	32	32	32	32	32	32	32	32	32	32	32	32
				Exposed	32	32	32	32	32	32	32	32	32	32	32	32	32	32	32	32	32	32	32	32	32	32	32	32	32	32	32	32	32	32	32	32	32	32	32	32	32	32	32	32	32	32
		2:12	9.5	Non-Exposed	30	30	30	30	30	30	30	30	30	30	30	30	30	30	30	30	30	30	30	30	30	30	30	30	30	30	30	30	30	30	30	30	30	30	30	30	30	30	30	30	30	30
				Exposed	30	30	30	30	30	30	30	30	30	30	30	30	30	30	30	30	30	30	30	30	30	30	30	30	30	30	30	30	30	30	30	30	30	30	30	30	30	30	30	30	30	30
		3:12	14.0	Non-Exposed	29	29	29	29	29	29	29	29	29	29	29	29	29	29	29	29	29	29	29	29	29	29	29	29	29	29	29	29	29	29	29	29	29	29	29	29	29	29	29	29	29	29
				Exposed	29	29	29	29	29	29	29	29	29	29	29	29	29	29	29	29	29	29	29	29	29	29	29	29	29	29	29	29	29	29	29	29	29	29	29	29	29	29	29	29	29	29
		4:12	18.4	Non-Exposed	29	29	29	29	29	29	29	29	29	29	29	29	29	29	29	29	29	29	29	29	29	29	29	29	29	29	29	29	29	29	29	29	29	29	29	29	29	29	29	29	29	29
				Exposed	29	29	29	29	29	29	29	29	29	29	29	29	29	29	29	29	29	29	29	29	29	29	29	29	29	29	29	29	29	29	29	29	29	29	29	29	29	29	29	29	29	29
		5:12	22.6	Non-Exposed	29	29	29	29	29	29	29	29	29	29	29	29	29	29	29	29	29	29	29	29	29	29	29	29	29	29	29	29	29	29	29	29	29	29	29	29	29	29	29	29	29	29
				Exposed	29	29	29	29	29	29	29	29	29	29	29	29	29	29	29	29	29	29	29	29	29	29	29	29	29	29	29	29	29	29	29	29	29	29	29	29	29	29	29	29	29	29
		6:12	26.6	Non-Exposed	30	30	30	30	30	30	30	30	30	30	30	30	30	30	30	30	30	30	30	30	30	30	30	30	30	30	30	30	30	30	30	30	30	30	30	30	30	30	30	30	30	30
				Exposed	30	30	30	30	30	30	30	30	30	30	30	30	30	30	30	30	30	30	30	30	30	30	30	30	30	30	30	30	30	30	30	30	30	30	30	30	30	30	30	30	30	30
		7:12	30.3	Non-Exposed	31	31	31	31	31	31	31	31	31	31	31	31	31	31	31	31	31	31	31	31	31	31	31	31	31	31	31	31	31	31	31	31	31	31	31	31	31	31	31	31	31	31
				Exposed	31	31	31	31	31	31	31	31	31	31	31	31	31	31	31	31	31	31	31	31	31	31	31	31	31	31	31	31	31	31	31	31	31	31	31	31	31	31	31	31	31	31
		8:12	33.7	Non-Exposed	33	33	33	33	33	33	33	33	33	33	33	33	33	33	33	33	33	33	33	33	33	33	33	33	33	33	33	33	33	33	33	33	33	33	33	33	33	33	33	33	33	33
				Exposed	33	33	33	33	33	33	33	33	33	33	33	33	33	33	33	33	33	33	33	33	33	33	33	33	33	33	33	33	33	33	33	33	33	33	33	33	33	33	33	33	33	33
		9:12	36.9	Non-Exposed	35	35	35	35	35	35	35	35	35	35	35	35	35	35	35	35	35	35	35	35	35	35	35	35	35	35	35	35	35	35	35	35	35	35	35	35	35	35	35	35	35	35
				Exposed	35	35	35	35	35	35	35	35	35	35	35	35	35	35	35	35	35	35	35	35	35	35	35	35	35	35	35	35	35	35	35	35	35	35	35	35	35	35	35	35	35	33
		10:12	39.8	Non-Exposed	37	37	37	37	37	37	37	37	37	37	37	37	37	37	37	37	37	37	37	37	37	37	37	37	37	37	37	37	37	37	37	37	37	37	37	37	37	37	37	37	37	37
				Exposed	37	37	37	37	37	37	37	37	37	37	37	37	37	37	37	37	37	37	37	37	37	37	37	37	37	37	37	37	37	37	37	37	37	37	37	37	37	37	35	37	37	33
		11:12	42.5	Non-Exposed	39	39	39	39	39	39	39	39	39	39	39	39	39	39	39	39	39	39	39	39	39	39	39	39	39	39	39	39	39	39	39	39	39	39	39	39	39	39	39	38	38	38
				Exposed	39	39	39	39	39	39	39	39	39	39	39	39	39	39	39	39	39	39	39	39	39	39	39	39	39	39	39	39	39	39	39	39	39	39	37	39	39	35	38	37	33
		12:12	45	Non-Exposed	41	41	41	41	41	41	41	41	41	41	41	41	41	41	41	41	41	41	41	41	41	41	41	41	41	41	41	41	41	41	41	41	41	41	41	41	41	41	40	40	40
				Exposed	41	41	41	41	41	41	41	41	41	41	41	41	41	41	41	41	41	41	41	41	41	41	41	41	41	41	41	41	41	40	41	41	37	41	39	35	39	37	33
	C	Flat	0	Non-Exposed	34	34	34	34	34	34	34	34	34	34	34	34	34	34	34	34	34	34	34	34	34	34	34	34	34	34	34	34	34	34	34	34	34	34	34	34	34	34	34	34	34	34
				Exposed	34	34	34	34	34	34	34	34	34	34	34	34	34	34	34	34	34	34	34	34	34	34	34	34	34	34	34	34	34	34	34	34	33	34	34	0	34	34	0	34	34	0
		1:12	4.8	Non-Exposed	32	32	32	32	32	32	32	32	32	32	32	32	32	32	32	32	32	32	32	32	32	32	32	32	32	32	32	32	32	32	32	32	32	32	32	32	32	32	32	32	32	32
				Exposed	32	32	32	32	32	32	32	32	32	32	32	32	32	32	32	32	32	32	32	32	32	32	32	32	32	32	32	32	32	32	32	32	32	32	32	0	32	32	0	32	32	0
		2:12	9.5	Non-Exposed	30	30	30	30	30	30	30	30	30	30	30	30	30	30	30	30	30	30	30	30	30	30	30	30	30	30	30	30	30	30	30	30	30	30	30	30	30	30	30	30	30	30
				Exposed	30	30	30	30	30	30	30	30	30	30	30	30	30	30	30	30	30	30	30	30	30	30	30	30	30	30	30	30	30	30	30	30	30	30	0	30	0	0	30	0	0	0
		3:12	14.0	Non-Exposed	29	29	29	29	29	29	29	29	29	29	29	29	29	29	29	29	29	29	29	29	29	29	29	29	29	29	29	29	29	29	29	29	29	29	29	29	29	29	29	29	29	29
				Exposed	29	29	29	29	29	29	29	29	29	29	29	29	29	29	29	29	29	29	29	29	29	29	29	29	29	29	29	29	29	29	29	29	29	29	0	29	0	0	29	0	0	0
		4:12	18.4	Non-Exposed	29	29	29	29	29	29	29	29	29	29	29	29	29	29	29	29	29	29	29	29	29	29	29	29	29	29	29	29	29	29	29	29	29	29	29	29	29	29	29	29	29	29
				Exposed	29	29	29	29	29	29	29	29	29	29	29	29	29	29	29	29	29	29	29	29	29	29	29	29	29	29	29	29	29	29	29	29	29	29	0	29	0	0	29	0	0	0
		5:12	22.6	Non-Exposed	29	29	29	29	29	29	29	29	29	29	29	29	29	29	29	29	29	29	29	29	29	29	29	29	29	29	29	29	29	29	29	29	29	29	29	29	29	29	29	29	29	29
				Exposed	29	29	29	29	29	29	29	29	29	29	29	29	29	29	29	29	29	29	29	29	29	29	29	29	29	29	29	29	29	29	29	29	29	29	29	29	29	29	29	29	29	0
110		6:12	26.6	Non-Exposed	30	30	30	30	30	30	30	30	30	30	30	30	30	30	30	30	30	30	30	30	30	30	30	30	30	30	30	30	30	30	30	30	30	30	30	30	30	30	30	30	30	30
				Exposed	30	30	30	30	30	30	30	30	30	30	30	30	30	30	30	30	30	30	30	30	30	30	30	30	30	30	30	30	30	30	30	30	30	30	30	0	30	30	0	30	30	0
		7:12	30.3	Non-Exposed	31	31	31	31	31	31	31	31	31	31	31	31	31	31	31	31	31	31	31	31	31	31	31	31	31	31	31	31	31	31	31	31	31	31	31	31	31	31	31	31	31	31
				Exposed	31	31	31	31	31	31	31	31	31	31	31	31	31	31	31	31	31	31	31	31	31	31	31	31	31	31	31	31	31	31	31	31	31	31	31	31	31	31	31	31	31	31
		8:12	33.7	Non-Exposed	33	33	33	33	33	33	33	33	33	33	33	33	33	33	33	33	33	33	33	33	33	33	33	33	33	33	33	33	33	33	33	33	33	33	33	33	33	33	33	33	33	33
				Exposed	33	33	33	33	33	33	33	33	33	33	33	33	33	33	33	33	33	33	33	33	33	33	33	33	33	33	33	33	33	33	33	33	33	33	33	33	33	33	33	33	33	33
		9:12	36.9	Non-Exposed	35	35	35	35	35	35	35	35	35	35	35	35	35	35	35	35	35	35	35	35	35	35	35	35	35	35	35	35	35	35	35	35	35	35	35	35	35	35	35	35	35	35
				Exposed	35	35	35	35	35	35	35	35	35	35	35	35	35	35	35	35	35	35	35	35	35	35	35	35	35	35	35	35	35	35	35	35	35	35	35	35	35	35	35	35	35	33
		10:12	39.8	Non-Exposed	37	37	37	37	37	37	37	37	37	37	37	37	37	37	37	37	37	37	37	37	37	37	37	37	37	37	37	37	37	37	37	37	37	37	37	37	37	37	37	37	37	37
				Exposed	37	37	37	37	37	37	37	37	37	37	37	37	37	37	37	37	37	37	37	37	37	37	37	37	37	37	37	37	37	37	37	37	37	37	37	37	37	35	37	37	33
		11:12	42.5	Non-Exposed	39	39	39	39	39	39	39	39	39	39	39	39	39	39	39	39	39	39	39	39	39	39	39	39	39	39	39	39	39	39	39	39	39	39	39	39	39	39	38	38	38
				Exposed	39	39	39	39	39	39	39	39	39	39	39	39	39	39	39	39	39	39	39	39	39	39	39	39	39	39	39	39	39	39	39	39	37	39	39	35	38	37	33
		12:12	45	Non-Exposed	41	41	41	41	41	41	41	41	41	41	41	41	41	41	41	41	41	41	41	41	41	41	41	41	41	41	41	41	41	41	41	41	41	41	41	41	40	40	40
				Exposed	41	41	41	41	41	41	41	41	41	41	41	41	41	41	41	41	41	41	41	41	41	41	41	41	41	41	41	41	41	40	41	41	37	41	39	35	39	37	33
	D	Flat	0	Non-Exposed	34	34	34	34	34	34	34	34	34	34	34	34	34	34	34	34	34	34	34	34	34	34	34	34	34	34	34	34	34	34	34	34	34	34	34	34	34	34	34	34	34	34
				Exposed	34	34	34	34	34	34	34	34	34	34	34	34	34	34	34	34	34	34	34	34	34	34	34	34	34	34	34	34	34	34	34	34	33	34	34	0	34	34	0	34	0	0
		1:12	4.8	Non-Exposed	32	32	32	32	32	32	32	32	32	32	32	32	32	32	32	32	32	32	32	32	32	32	32	32	32	32	32	32	32	32	32	32	32	32	32	32	32	32	32	32	32	32
				Exposed	32	32	32	32	32	32	32	32	32	32	32	32	32	32	32	32	32	32	32	32	32	32	32	32	32	32	32	32	32	32	32	32	32	32	0	32	32	0	32	0	0
		2:12	9.5	Non-Exposed	30	30	30	30	30	30	30	30	30	30	30	30	30	30	30	30	30	30	30	30	30	30	30	30	30	30	30	30	30	30	30	30	30	30	30	30	30	30	30	30	30	0
				Exposed	30	30	30	30	30	30	30	30	30	30	30	30	30	30	30	30	30	30	30	30	30	30	30	30	30	30	30	30	30	30	30	30	0	30	0	0	30	0	0	30	0	0
		3:12	14.0	Non-Exposed	29	29	29	29	29	29	29	29	29	29	29	29	29	29	29	29	29	29	29	29	29	29	29	29	29	29	29	29	29	29	29	29	29	29	29	29	29	29	29	29	29	0
				Exposed	29	29	29	29	29	29	29	29	29	29	29	29	29	29	29	29	29	29	29	29	29	29	29	29	29	29	29	29	29	29	29	29	0	29	0	0	29	0	0	29	0	0
		4:12	18.4	Non-Exposed	29	29	29	29	29	29	29	29	29	29	29	29	29	29	29	29	29	29	29	29	29	29	29	29	29	29	29	29	29	29	29	29	29	29	29	29	29	29	29	29	29	0
				Exposed	29	29	29	29	29	29	29	29	29	29	29	29	29	29	29	29	29	29	29	29	29	29	29	29	29	29	29	29	29	29	29	29	0	29	0	0	29	0	0	29	0	0
		5:12	22.6	Non-Exposed	29	29	29	29	29	29	29	29	29	29	29	29	29	29	29	29	29	29	29	29	29	29	29	29	29	29	29	29	29	29	29	29	29	29	29	29	29	29	29	29	29	29
				Exposed	29	29	29	29	29	29	29	29	29	29	29	29	29	29	29	29	29	29	29	29	29	29	29	29	29	29	29	29	29	29	29	29	29	29	0	29	29	0	29	0	0
		6:12	26.6	Non-Exposed	30	30	30	30	30	30	30	30	30	30	30	30	30	30	30	30	30	30	30	30	30	30	30	30	30	30	30	30	30	30	30	30	30	30	30	30	30	30	30	30	30	30
				Exposed	30	30	30	30	30	30	30	30	30	30	30	30	30	30	30	30	30	30	30	30	30	30	30	30	30	30	30	30	30	30	30	30	30	30	0	30	0	0	30	0	0	0
		7:12	30.3	Non-Exposed	31	31	31	31	31	31	31	31	31	31	31	31	31	31	31	31	31	31	31	31	31	31	31	31	31	31	31	31	31	31	31	31	31	31	31	31	31	31	31	31	31	31
				Exposed	31	31	31	31	31	31	31	31	31	31	31	31	31	31	31	31	31	31	31	31	31	31	31	31	31	31	31	31	31	31	31	31	31	31	31	0	31	31	0	31	31	0
		8:12	33.7	Non-Exposed	33	33	33	33	33	33	33	33	33	33	33	33	33	33	33	33	33	33	33	33	33	33	33	33	33	33	33	33	33	33	33	33	33	33	33	33	33	33	33	33	33	33
				Exposed	33	33	33	33	33	33	33	33	33	33	33	33	33	33	33	33	33	33	33	33	33	33	33	33	33	33	33	33	33	33	33	33	33	33	33	0	33	33	0	33	33	0
		9:12	36.9	Non-Exposed	35	35	35	35	35	35	35	35	35	35	35	35	35	35	35	35	35	35	35	35	35	35	35	35	35	35	35	35	35	35	35	35	35	35	35	35	35	35	35	35	35	35
				Exposed	35	35	35	35	35	35	35	35	35	35	35	35	35	35	35	35	35	35	35	35	35	35	35	35	35	35	35	35	35	35	35	35	34	35	35	0	35	34	0	35	34	0
		10:12	39.8	Non-Exposed	37	37	37	37	37	37	37	37	37	37	37	37	37	37	37	37	37	37	37	37	37	37	37	37	37	37	37	37	37	37	37	37	37	37	37	37	36	36	36	36	36	36
				Exposed	37	37	37	37	37	37	37	37	37	37	37	37	37	37	37	37	37	37	37	37	37	37	37	37	37	37	37	37	37	36	37	37	34	37	36	0	36	34	0	36	34	0
		11:12	42.5	Non-Exposed	39	39	39	39	39	39	39	39	39	39	39	39	39	39	39	39	39	39	39	39	39	39	39	39	39	39	39	39	39	39	39	39	39	39	38	38	38	37	37	37	37	37
				Exposed	39	39	39	39	39	39	39	39	39	39	39	39	39	39	39	39	39	39	39	39	39	39	39	39	39	39	39	39	39	36	39	39	34	38	36	0	36	34	0	36	34	0
		12:12	45	Non-Exposed	41	41	41	41	41	41	41	41	41	41	41	41	41	41	41	41	41	41	41	41	41	41	41	41	41	41	41	41	41	41	41	41	40	40	40	40	40	40	39	39	37
				Exposed	41	41	41	41	41	41	41	41	41	41	41	41	41	41	41	41	41	41	41	41	41	41	41	41	41	41	41	41	39	41	41	36	40	38	34	38	36	0	36	34	0

Tamarack 2.3 Rail – Gable Flush-Mount on 30 Foot Maximum Mean Roof Height – Portrait – Panel Length = 68 Inches or Less

Ground Snow Load	Exposure Category	Roof Pitch	Roof Angle	Wind Speed (mph)	95			100			105			110			115			120			125			130			140			150			160			170			180			190		
				Roof Area	1	2	3	1	2	3	1	2	3	1	2	3	1	2	3	1	2	3	1	2	3	1	2	3	1	2	3	1	2	3	1	2	3	1	2	3	1	2	3	1	2	3
120	B	Flat	0	Non-Exposed	33	33	33	33	33	33	33	33	33	33	33	33	33	33	33	33	33	33	33	33	33	33	33	33	33	33	33	33	33	33	33	33	33	33	33	33	33	33	33	33	33	33
				Exposed	33	33	33	33	33	33	33	33	33	33	33	33	33	33	33	33	33	33	33	33	33	33	33	33	33	33	33	33	33	33	33	33	33	33	33	33	33	33	33	33	33	33
		1:12	4.8	Non-Exposed	30	30	30	30	30	30	30	30	30	30	30	30	30	30	30	30	30	30	30	30	30	30	30	30	30	30	30	30	30	30	30	30	30	30	30	30	30	30	30	30	30	30
				Exposed	30	30	30	30	30	30	30	30	30	30	30	30	30	30	30	30	30	30	30	30	30	30	30	30	30	30	30	30	30	30	30	30	30	30	30	30	30	30	30	30	30	30
		2:12	9.5	Non-Exposed	29	29	29	29	29	29	29	29	29	29	29	29	29	29	29	29	29	29	29	29	29	29	29	29	29	29	29	29	29	29	29	29	29	29	29	29	29	29	29	29	29	29
				Exposed	29	29	29	29	29	29	29	29	29	29	29	29	29	29	29	29	29	29	29	29	29	29	29	29	29	29	29	29	29	29	29	29	29	29	29	29	29	29	29	29	29	29
		3:12	14.0	Non-Exposed	27	27	27	27	27	27	27	27	27	27	27	27	27	27	27	27	27	27	27	27	27	27	27	27	27	27	27	27	27	27	27	27	27	27	27	27	27	27	27	27	27	27
				Exposed	27	27	27	27	27	27	27	27	27	27	27	27	27	27	27	27	27	27	27	27	27	27	27	27	27	27	27	27	27	27	27	27	27	27	27	27	27	27	27	27	27	27
		4:12	18.4	Non-Exposed	27	27	27	27	27	27	27	27	27	27	27	27	27	27	27	27	27	27	27	27	27	27	27	27	27	27	27	27	27	27	27	27	27	27	27	27	27	27	27	27	27	27
				Exposed	27	27	27	27	27	27	27	27	27	27	27	27	27	27	27	27	27	27	27	27	27	27	27	27	27	27	27	27	27	27	27	27	27	27	27	27	27	27	27	27	27	27
		5:12	22.6	Non-Exposed	28	28	28	28	28	28	28	28	28	28	28	28	28	28	28	28	28	28	28	28	28	28	28	28	28	28	28	28	28	28	28	28	28	28	28	28	28	28	28	28	28	28
				Exposed	28	28	28	28	28	28	28	28	28	28	28	28	28	28	28	28	28	28	28	28	28	28	28	28	28	28	28	28	28	28	28	28	28	28	28	28	28	28	28	28	28	28
		6:12	26.6	Non-Exposed	29	29	29	29	29	29	29	29	29	29	29	29	29	29	29	29	29	29	29	29	29	29	29	29	29	29	29	29	29	29	29	29	29	29	29	29	29	29	29	29	29	29
				Exposed	29	29	29	29	29	29	29	29	29	29	29	29	29	29	29	29	29	29	29	29	29	29	29	29	29	29	29	29	29	29	29	29	29	29	29	29	29	29	29	29	29	29
		7:12	30.3	Non-Exposed	30	30	30	30	30	30	30	30	30	30	30	30	30	30	30	30	30	30	30	30	30	30	30	30	30	30	30	30	30	30	30	30	30	30	30	30	30	30	30	30	30	30
				Exposed	30	30	30	30	30	30	30	30	30	30	30	30	30	30	30	30	30	30	30	30	30	30	30	30	30	30	30	30	30	30	30	30	30	30	30	30	30	30	30	30	30	30
		8:12	33.7	Non-Exposed	31	31	31	31	31	31	31	31	31	31	31	31	31	31	31	31	31	31	31	31	31	31	31	31	31	31	31	31	31	31	31	31	31	31	31	31	31	31	31	31	31	31
				Exposed	31	31	31	31	31	31	31	31	31	31	31	31	31	31	31	31	31	31	31	31	31	31	31	31	31	31	31	31	31	31	31	31	31	31	31	31	31	31	31	31	31	31
		9:12	36.9	Non-Exposed	33	33	33	33	33	33	33	33	33	33	33	33	33	33	33	33	33	33	33	33	33	33	33	33	33	33	33	33	33	33	33	33	33	33	33	33	33	33	33	33	33	33
				Exposed	33	33	33	33	33	33	33	33	33	33	33	33	33	33	33	33	33	33	33	33	33	33	33	33	33	33	33	33	33	33	33	33	33	33	33	33	33	33	33	33	33	33
		10:12	39.8	Non-Exposed	35	35	35	35	35	35	35	35	35	35	35	35	35	35	35	35	35	35	35	35	35	35	35	35	35	35	35	35	35	35	35	35	35	35	35	35	35	35	35	35	35	35
				Exposed	35	35	35	35	35	35	35	35	35	35	35	35	35	35	35	35	35	35	35	35	35	35	35	35	35	35	35	35	35	35	35	35	35	35	35	35	35	35	35	35	35	35
		11:12	42.5	Non-Exposed	37	37	37	37	37	37	37	37	37	37	37	37	37	37	37	37	37	37	37	37	37	37	37	37	37	37	37	37	37	37	37	37	37	37	37	37	37	37	37	37	37	37
				Exposed	37	37	37	37	37	37	37	37	37	37	37	37	37	37	37	37	37	37	37	37	37	37	37	37	37	37	37	37	37	37	37	37	37	37	37	37	37	37	37	37	37	37
		12:12	45	Non-Exposed	39	39	39	39	39	39	39	39	39	39	39	39	39	39	39	39	39	39	39	39	39	39	39	39	39	39	39	39	39	39	39	39	39	39	39	39	39	39	39	39	39	39
				Exposed	39	39	39	39	39	39	39	39	39	39	39	39	39	39	39	39	39	39	39	39	39	39	39	39	39	39	39	39	39	39	39	39	39	39	39	39	39	39	39	39	39	39
	C	Flat	0	Non-Exposed	33	33	33	33	33	33	33	33	33	33	33	33	33	33	33	33	33	33	33	33	33	33	33	33	33	33	33	33	33	33	33	33	33	33	33	33	33	33	33	33	33	33
				Exposed	33	33	33	33	33	33	33	33	33	33	33	33	33	33	33	33	33	33	33	33	33	33	33	33	33	33	33	33	33	33	33	33	33	33	33	0	33	33	0	33	33	0
		1:12	4.8	Non-Exposed	30	30	30	30	30	30	30	30	30	30	30	30	30	30	30	30	30	30	30	30	30	30	30	30	30	30	30	30	30	30	30	30	30	30	30	30	30	30	30	30	30	30
				Exposed	30	30	30	30	30	30	30	30	30	30	30	30	30	30	30	30	30	30	30	30	30	30	30	30	30	30	30	30	30	30	30	30	30	30	30	0	30	30	0	30	30	0
		2:12	9.5	Non-Exposed	29	29	29	29	29	29	29	29	29	29	29	29	29	29	29	29	29	29	29	29	29	29	29	29	29	29	29	29	29	29	29	29	29	29	29	29	29	29	29	29	29	29
				Exposed	29	29	29	29	29	29	29	29	29	29	29	29	29	29	29	29	29	29	29	29	29	29	29	29	29	29	29	29	29	29	29	29	29	29	29	0	29	0	0	29	0	0
		3:12	14.0	Non-Exposed	27	27	27	27	27	27	27	27	27	27	27	27	27	27	27	27	27	27	27	27	27	27	27	27	27	27	27	27	27	27	27	27	27	27	27	27	27	27	27	27	27	27
				Exposed	27	27	27	27	27	27	27	27	27	27	27	27	27	27	27	27	27	27	27	27	27	27	27	27	27	27	27	27	27	27	27	27	27	27	27	0	27	0	0	27	0	0
		4:12	18.4	Non-Exposed	27	27	27	27	27	27	27	27	27	27	27	27	27	27	27	27	27	27	27	27	27	27	27	27	27	27	27	27	27	27	27	27	27	27	27	27	27	27	27	27	27	27
				Exposed	27	27	27	27	27	27	27	27	27	27	27	27	27	27	27	27	27	27	27	27	27	27	27	27	27	27	27	27	27	27	27	27	27	27	27	0	27	0	0	27	0	0
		5:12	22.6	Non-Exposed	28	28	28	28	28	28	28	28	28	28	28	28	28	28	28	28	28	28	28	28	28	28	28	28	28	28	28	28	28	28	28	28	28	28	28	28	28	28	28	28	28	28
				Exposed	28	28	28	28	28	28	28	28	28	28	28	28	28	28	28	28	28	28	28	28	28	28	28	28	28	28	28	28	28	28	28	28	28	28	28	28	28	28	28	28	28	0
		6:12	26.6	Non-Exposed	29	29	29	29	29	29	29	29	29	29	29	29	29	29	29	29	29	29	29	29	29	29	29	29	29	29	29	29	29	29	29	29	29	29	29	29	29	29	29	29	29	29
				Exposed	29	29	29	29	29	29	29	29	29	29	29	29	29	29	29	29	29	29	29	29	29	29	29	29	29	29	29	29	29	29	29	29	29	29	29	0	29	29	0	29	29	0
		7:12	30.3	Non-Exposed	30	30	30	30	30	30	30	30	30	30	30	30	30	30	30	30	30	30	30	30	30	30	30	30	30	30	30	30	30	30	30	30	30	30	30	30	30	30	30	30	30	30
				Exposed	30	30	30	30	30	30	30	30	30	30	30	30	30	30	30	30	30	30	30	30	30	30	30	30	30	30	30	30	30	30	30	30	30	30	30	30	30	30	30	30	30	30
		8:12	33.7	Non-Exposed	31	31	31	31	31	31	31	31	31	31	31	31	31	31	31	31	31	31	31	31	31	31	31	31	31	31	31	31	31	31	31	31	31	31	31	31	31	31	31	31	31	31
				Exposed	31	31	31	31	31	31	31	31	31	31	31	31	31	31	31	31	31	31	31	31	31	31	31	31	31	31	31	31	31	31	31	31	31	31	31	31	31	31	31	31	31	31
		9:12	36.9	Non-Exposed	33	33	33	33	33	33	33	33	33	33	33	33	33	33	33	33	33	33	33	33	33	33	33	33	33	33	33	33	33	33	33	33	33	33	33	33	33	33	33	33	33	33
				Exposed	33	33	33	33	33	33	33	33	33	33	33	33	33	33	33	33	33	33	33	33	33	33	33	33	33	33	33	33	33	33	33	33	33	33	33	33	33	33	33	33	33	33
		10:12	39.8	Non-Exposed	35	35	35	35	35	35	35	35	35	35	35	35	35	35	35	35	35	35	35	35	35	35	35	35	35	35	35	35	35	35	35	35	35	35	35	35	35	35	35	35	35	35
				Exposed	35	35	35	35	35	35	35	35	35	35	35	35	35	35	35	35	35	35	35	35	35	35	35	35	35	35	35	35	35	35	35	35	35	35	35	35	35	35	35	35	35	33
		11:12	42.5	Non-Exposed	37	37	37	37	37	37	37	37	37	37	37	37	37	37	37	37	37	37	37	37	37	37	37	37	37	37	37	37	37	37	37	37	37	37	37	37	37	37	37	37	37	37
				Exposed	37	37	37	37	37	37	37	37	37	37	37	37	37	37	37	37	37	37	37	37	37	37	37	37	37	37	37	37	37	37	37	37	37	37	37	37	37	37	37	35	37	33
		12:12	45	Non-Exposed	39	39	39	39	39	39	39	39	39	39	39	39	39	39	39	39	39	39	39	39	39	39	39	39	39	39	39	39	39	39	39	39	39	39	39	39	39	39	39	39	39	39
				Exposed	39	39	39	39	39	39	39	39	39	39	39	39	39	39	39	39	39	39	39	39	39	39	39	39	39	39	39	39	39	39	39	39	39	39	39	39	39	39	35	39	37	33
	D	Flat	0	Non-Exposed	33	33	33	33	33	33	33	33	33	33	33	33	33	33	33	33	33	33	33	33	33	33	33	33	33	33	33	33	33	33	33	33	33	33	33	33	33	33	33	33	33	33
				Exposed	33	33	33	33	33	33	33	33	33	33	33	33	33	33	33	33	33	33	33	33	33	33	33	33	33	33	33	33	33	33	33	33	33	33	33	0	33	33	0	33	0	0
		1:12	4.8	Non-Exposed	30	30	30	30	30	30	30	30	30	30	30	30	30	30	30	30	30	30	30	30	30	30	30	30	30	30	30	30	30	30	30	30	30	30	30	30	30	30	30	30	30	30
				Exposed	30	30	30	30	30	30	30	30	30	30	30	30	30	30	30	30	30	30	30	30	30	30	30	30	30	30	30	30	30	30	30	30	30	30	30	0	30	30	0	30	0	0
		2:12	9.5	Non-Exposed	29	29	29	29	29	29	29	29	29	29	29	29	29	29	29	29	29	29	29	29	29	29	29	29	29	29	29	29	29	29	29	29	29	29	29	29	29	29	29	29	29	0
				Exposed	29	29	29	29	29	29	29	29	29	29	29	29	29	29	29	29	29	29	29	29	29	29	29	29	29	29	29	29	29	29	29	29	29	29	29	0	29	0	0	29	0	0
		3:12	14.0	Non-Exposed	27	27	27	27	27	27	27	27	27	27	27	27	27	27	27	27	27	27	27	27	27	27	27	27	27	27	27	27	27	27	27	27	27	27	27	27	27	27	27	27	27	0
				Exposed	27	27	27	27	27	27	27	27	27	27	27	27	27	27	27	27	27	27	27	27	27	27	27	27	27	27	27	27	27	27	27	27	27	27	27	0	27	0	0	27	0	0
		4:12	18.4	Non-Exposed	27	27	27	27	27	27	27	27	27	27	27	27	27	27	27	27	27	27	27	27	27	27	27	27	27	27	27	27	27	27	27	27	27	27	27	27	27	27	27	27	27	0
				Exposed	27	27	27	27	27	27	27	27	27	27	27	27	27	27	27	27	27	27	27	27	27	27	27	27	27	27	27	27	27	27	27	27	27	27	27	0	27	0	0	27	0	0
		5:12	22.6	Non-Exposed	28	28	28	28	28	28	28	28	28	28	28	28	28	28	28	28	28	28	28	28	28	28	28	28	28	28	28	28	28	28	28	28	28	28	28	28	28	28	28	28	28	28
				Exposed	28	28	28	28	28	28	28	28	28	28	28	28	28	28	28	28	28	28	28	28	28	28	28	28	28	28	28	28	28	28	28	28	28	28	28	0	28	28	0	28	0	0
		6:12	26.6	Non-Exposed	29	29	29	29	29	29	29	29	29	29	29	29	29	29	29	29	29	29	29	29	29	29	29	29	29	29	29	29	29	29	29	29	29	29	29	29	29	29	29	29	29	29
				Exposed	29	29	29	29	29	29	29	29	29	29	29	29	29	29	29	29	29	29	29	29	29	29	29	29	29	29	29	29	29	29	29	29	29	29	29	0	29	0	0	29	0	0
		7:12	30.3	Non-Exposed	30	30	30	30	30	30	30	30	30	30	30	30	30	30	30	30	30	30	30	30	30	30	30	30	30	30	30	30	30	30	30	30	30	30	30	30	30	30	30	30	30	0
				Exposed	30	30	30	30	30	30	30	30	30	30	30	30	30	30	30	30	30	30	30	30	30	30	30	30	30	30	30	30	30	30	30	30	30	30	30	30	30	30	30	30	30	0
		8:12	33.7	Non-Exposed	31	31	31	31	31	31	31	31	31	31	31	31	31	31	31	31	31	31	31	31	31	31	31	31	31	31	31	31	31	31	31	31	31	31	31	31	31	31	31	31	31	31
				Exposed	31	31	31	31	31	31	31	31	31	31	31	31	31	31	31	31	31	31	31	31	31	31	31	31	31	31	31	31	31	31	31	31	31	31	31	31	31	31	31	31	31	0
		9:12	36.9	Non-Exposed	33	33	33	33	33	33	33	33	33	33	33	33	33	33	33	33	33	33	33	33	33	33	33	33	33	33	33	33	33	33	33	33	33	33	33	33	33	33	33	33	33	33
				Exposed	33	33	33	33	33	33	33	33	33	33	33	33	33	33	33	33	33	33	33	33	33	33	33	33	33	33	33	33	33	33	33	33	33	33	33	33	33	33	33	33	33	0
		10:12	39.8	Non-Exposed	35	35	35	35	35	35	35	35	35	35	35	35	35	35	35	35	35	35	35	35	35	35	35	35	35	35	35	35	35	35	35	35	35	35	35	35	35	35	35	35	35	35
				Exposed	35	35	35	35	35	35	35	35	35	35	35	35	35	35	35	35	35	35	35	35	35	35	35	35	35	35	35	35	35	35	35	35	35	35	35	34	35	35	0	35	34	0
		11:12	42.5	Non-Exposed	37	37	37	37	37	37	37	37	37	37	37	37	37	37	37	37	37	37	37	37	37	37	37	37	37	37	37	37	37	37	37	37	37	37	37	37	37	37	37	36	36	36
				Exposed	37	37	37	37	37	37	37	37	37	37	37	37	37	37	37	37	37	37	37	37	37	37	37	37	37	37	37	37	37	37	37	37	37	37	34	37	37	36	0	36	34	0
		12:12	45	Non-Exposed	39	39	39	39	39	39	39	39	39	39	39	39	39	39	39	39	39	39	39	39	39	39	39	39	39	39	39	39	39	39	39	39	39	39	39	39	39	38	38	38	38	37
				Exposed	39	39	39	39	39	39	39	39	39	39	39	39	39	39	39	39	39	39	39	39	39	39	39	39	39	39	39	39	39	39	39	36	39	38	34	38	36	0	36	34	0

Tamarack 2.3 Rail – Hip Flush-Mount on 30 Foot Maximum Mean Roof Height – Portrait – Panel Length = 68 Inches or Less

Ground Snow Load	Exposure Category	Roof Pitch	Roof Angle	Wind Speed (mph)	95			100			105			110			115			120			125			130			140			150			160			170			180			190		
				Roof Area	1	2	3	1	2	3	1	2	3	1	2	3	1	2	3	1	2	3	1	2	3	1	2	3	1	2	3	1	2	3	1	2	3	1	2	3	1	2	3	1	2	3
0	B	2:12	9.5	Non-Exposed	94	94	94	94	94	94	94	94	94	94	94	94	94	94	94	94	94	89	94	89	85	94	85	81	87	77	73	79	70	67	74	65	62	69	60	57	64	56	53	60	52	50
				Exposed	94	94	93	94	92	87	94	86	82	91	81	77	86	76	73	81	72	69	77	69	65	74	65	62	68	59	57	63	55	52	58	50	48	54	47	44	51	44	41	48	41	39
		3:12	14.0	Non-Exposed	93	93	93	93	93	93	93	93	93	93	93	93	93	93	93	93	93	89	93	89	84	93	84	80	86	76	73	79	70	67	73	65	61	68	60	57	64	56	53	60	52	50
				Exposed	93	93	92	93	91	86	93	85	81	91	80	76	85	76	72	81	72	68	77	68	65	74	65	62	68	59	56	62	54	52	58	50	48	54	47	44	51	43	41	48	41	39
		4:12	18.4	Non-Exposed	92	92	92	92	92	92	92	92	92	92	92	92	92	92	92	92	92	88	92	88	83	92	84	79	85	76	72	78	70	66	73	64	61	68	60	57	64	56	53	60	52	50
				Exposed	92	92	92	92	90	86	92	85	81	90	80	76	84	75	72	80	72	68	77	68	65	73	65	62	67	59	56	62	54	52	58	50	48	54	46	44	51	43	41	48	41	39
		5:12	22.6	Non-Exposed	91	91		91	91		91	91		91	91		91	91		91	91		91	91		91	91		91	85		91	78		91	72		84	67		78	62		73	58	
				Exposed	91	91		91	91		91	91		91	90		91	85		91	80		91	76		91	73		84	66		76	61		70	56		65	52		61	48		57	45	
		6:12	26.6	Non-Exposed	91	91		91	91		91	91		91	91		91	91		91	91		91	91		91	91		91	85		91	78		91	72		84	67		78	62		73	58	
				Exposed	91	91		91	91		91	91		91	89		91	84		91	80		91	76		91	72		83	66		76	60		70	56		65	52		60	48		56	45	
		7:12	30.3	Non-Exposed	90	90	90	90	90	90	90	90	90	90	90	90	90	90	90	90	90	90	90	88	90	90	83	85	90	75	75	90	69	68	86	63	62	79	58	56	74	54	52	69	50	48
				Exposed	90	90	90	90	90	90	90	84	86	90	79	80	90	75	75	90	71	70	90	67	66	86	63	62	79	58	56	72	53	50	67	48	46	62	45	42	58	42	39	54	39	37
		8:12	33.7	Non-Exposed	90	90	90	90	90	90	90	90	90	90	90	90	90	90	90	90	90	90	90	87	90	90	83	84	90	75	75	90	68	68	85	63	61	79	58	56	74	54	52	69	50	48
				Exposed	90	90	90	90	89	90	90	84	86	90	79	80	90	74	74	90	70	70	90	67	66	86	63	62	78	57	55	72	52	50	66	48	46	62	45	42	57	41	39	54	39	37
		9:12	36.9	Non-Exposed	89	89	89	89	89	89	89	89	89	89	89	89	89	89	89	89	89	89	89	87	89	89	82	84	89	75	75	89	68	67	85	63	61	79	58	56	73	54	52	69	50	48
				Exposed	89	89	89	89	89	89	89	83	85	89	78	79	89	74	74	89	70	69	89	66	65	85	63	62	78	57	55	72	52	50	66	48	46	61	45	42	57	41	39	54	39	36
		10:12	39.8	Non-Exposed	89	89	89	89	89	89	89	89	89	89	89	89	89	89	89	89	89	89	89	86	88	89	82	83	89	74	74	89	68	67	84	62	61	78	58	56	73	54	51	68	50	48
				Exposed	89	89	89	89	88	89	89	83	84	89	78	79	89	74	74	89	70	69	89	66	65	85	63	61	77	57	55	71	52	50	66	48	46	61	44	42	57	41	39	54	39	36
		11:12	42.5	Non-Exposed	89	89	89	89	89	89	89	89	89	89	89	89	89	89	89	89	89	89	89	86	88	89	81	83	89	74	74	89	68	67	84	62	61	78	58	56	73	53	51	68	50	48
				Exposed	89	89	89	89	88	89	89	82	84	89	78	78	89	73	73	89	69	69	88	66	65	84	63	61	77	57	55	71	52	50	66	48	45	61	44	42	57	41	39	53	39	36
		12:12	45	Non-Exposed	88	88	88	88	88	88	88	88	88	88	88	88	88	88	88	88	88	88	88	85	87	88	81	82	88	74	74	88	67	67	84	62	61	78	57	56	73	53	51	68	50	47
				Exposed	88	88	88	88	87	88	88	82	83	88	77	78	88	73	73	88	69	69	88	66	65	84	62	61	77	57	55	71	52	50	66	48	45	61	44	42	57	41	39	53	39	36
	C	2:12	9.5	Non-Exposed	94	94	94	94	94	91	94	90	85	94	85	80	90	80	76	85	76	72	81	72	68	77	68	65	71	62	59	65	57	54	61	52	50	57	49	46	53	45	43	50	42	41
				Exposed	89	79	75	83	74	70	78	69	66	74	65	62	70	62	59	67	58	56	64	55	53	61	53	50	56	48	46	52	44	42	48	41	39	45	39	37	42	36	35	40	34	33
		3:12	14.0	Non-Exposed	93	93	93	93	93	90	93	89	85	93	84	80	89	79	75	84	75	71	80	71	68	77	68	64	70	62	59	65	57	54	60	52	50	56	49	46	53	45	43	50	42	41
				Exposed	88	78	74	82	73	70	78	69	65	73	65	62	70	61	58	66	58	55	63	55	53	61	53	50	56	48	46	52	44	42	48	41	39	45	38	37	42	36	35	40	34	33
		4:12	18.4	Non-Exposed	92	92	92	92	92	89	92	88	84	92	83	79	88	79	75	83	75	71	80	71	67	76	67	64	70	62	59	65	57	54	60	52	50	56	48	46	53	45	43	50	42	41
				Exposed	87	78	74	81	73	69	77	68	65	73	65	61	69	61	58	66	58	55	63	55	52	60	53	50	56	48	46	51	44	42	48	41	39	45	38	37	42	36	35	40	34	33
		5:12	22.6	Non-Exposed	91	91		91	91		91	91		91	91		91	88		91	84		91	80		91	76		87	69		80	63		73	58		68	54		63	50		59	47	
				Exposed	91	87		91	82		91	77		91	72		87	68		82	65		78	62		74	59		67	54		62	49		57	45		53	42		49	40		46	38	
		6:12	26.6	Non-Exposed	91	91		91	91		91	91		91	91		91	88		91	83		91	79		91	75		87	69		79	63		73	58		68	54		63	50		59	47	
				Exposed	91	86		91	81		91	76		91	72		86	68		81	65		77	61		74	59		67	53		61	49		57	45		53	42		49	40		46	38	
		7:12	30.3	Non-Exposed	90	90	90	90	90	90	90	88	90	90	83	85	90	78	79	90	74	74	90	70	69	90	66	65	82	60	58	75	55	53	69	51	48	64	47	44	60	43	41	56	41	38
				Exposed	90	77	77	90	72	71	90	67	66	86	63	62	81	60	58	77	56	54	73	53	51	70	51	48	64	46	44	59	42	40	54	39	37	50	36	34	47	34	32	44	32	0
		8:12	33.7	Non-Exposed	90	90	90	90	90	90	90	88	90	90	82	84	90	78	78	90	73	73	90	70	69	89	66	65	82	60	58	75	55	53	69	50	48	64	47	44	60	43	41	56	41	38
				Exposed	90	76	77	90	71	71	90	67	66	86	63	62	81	59	58	77	56	54	73	53	51	70	51	48	64	46	43	58	42	40	54	39	37	50	36	34	47	34	32	44	32	0
		9:12	36.9	Non-Exposed	89	89	89	89	89	89	89	87	89	89	82	83	89	77	78	89	73	73	89	69	69	89	66	65	81	60	58	75	55	53	69	50	48	64	47	44	60	43	41	56	40	38
				Exposed	89	76	76	89	71	71	89	67	66	85	63	61	81	59	58	76	56	54	73	53	51	69	51	48	63	46	43	58	42	40	54	39	37	50	36	34	47	34	32	44	32	0
		10:12	39.8	Non-Exposed	89	89	89	89	89	89	89	87	89	89	82	83	89	77	77	89	73	73	89	69	68	88	66	64	81	60	58	74	55	52	69	50	48	64	46	44	60	43	41	56	40	38
				Exposed	89	76	76	89	71	70	89	67	66	85	63	61	80	59	57	76	56	54	72	53	51	69	51	48	63	46	43	58	42	40	54	39	37	50	36	34	47	34	32	44	32	0
		11:12	42.5	Non-Exposed	89	89	89	89	89	89	89	86	88	89	81	82	89	77	77	89	73	72	89	69	68	88	65	64	80	59	58	74	54	52	68	50	48	64	46	44	59	43	41	56	40	38
				Exposed	89	75	76	89	71	70	89	66	65	84	62	61	80	59	57	76	56	54	72	53	51	69	50	48	63	46	43	58	42	40	54	39	37	50	36	34	46	34	32	44	32	0
		12:12	45	Non-Exposed	88	88	88	88	88	88	88	86	88	88	81	82	88	76	77	88	72	72	88	69	68	87	65	64	80	59	58	74	54	52	68	50	48	63	46	44	59	43	41	56	40	38
				Exposed	88	75	75	88	70	70	88	66	65	84	62	61	79	59	57	76	56	54	72	53	51	69	50	48	63	46	43	58	42	40	54	39	36	50	36	34	46	34	32	43	32	0
	D	2:12	9.5	Non-Exposed	94	92	87	94	86	81	91	81	76	85	76	72	81	72	68	77	68	64	73	64	61	70	61	58	64	56	53	59	51	49	55	47	45	51	44	42	48	41	39	45	39	37
				Exposed	79	71	67	75	66	63	71	62	59	67	59	56	64	55	53	61	53	50	58	50	48	55	48	45	51	43	41	47	40	39	44	38	36	41	35	34	39	33	0	37	0	0
		3:12	14.0	Non-Exposed	93	91	86	93	85	81	90	80	76	84	75	72	80	71	68	76	67	64	73	64	61	69	61	58	64	56	53	59	51	49	55	47	45	51	44	42	48	41	39	45	39	37
				Exposed	79	70	67	74	66	63	70	62	59	67	58	56	63	55	53	60	52	50	58	50	47	55	47	45	51	43	41	47	40	39	44	38	36	41	35	34	39	33	0	37	0	0
		4:12	18.4	Non-Exposed	92	90	86	92	85	80	89	79	76	84	75	71	80	71	67	76	67	64	72	64	61	69	61	58	64	55	53	59	51	49	55	47	45	51	44	42	48	41	39	45	39	37
				Exposed	78	70	66	74	65	62	70	62	59	66	58	55	63	55	52	60	52	50	57	50	47	55	47	45	51	43	41	47	40	38	44	38	36	41	35	34	39	33	0	36	0	0
		5:12	22.6	Non-Exposed	91	91		91	91		91	89		91	84		91	79		91	75		91	72		86	68		78	62		72	57		66	53		61	49		57	46		53	43	
				Exposed	91	78		91	73		87	69		82	65		78	62		74	58		70	56		66	53		60	48		55	44		51	41		47	39		44	36		41	35	
		6:12	26.6	Non-Exposed	91	91		91	91		91	88		91	83		91	79		91	75		90	71		85	68		78	62		71	57		66	52		61	49		57	45		53	43	
				Exposed	91	78		91	73		87	69		82	65		77	61		73	58		69	55		66	53		60	48		55	44		51	41		47	39		44	36		41	34	
		7:12	30.3	Non-Exposed	90	90	90	90	84	86	90	79	80	90	74	74	90	70	69	90	66	65	85	63	61	81	59	58	74	54	52	68	49	47	63	45	43	58	42	39	54	39	37	51	37	34
				Exposed	90	69	68	87	64	63	82	60	58	77	57	55	73	53	51	70	51	48	66	48	45	63	46	43	57	41	39	53	38	36	49	35	33	45	33	0	42	0	0	40	0	0
		8:12	33.7	Non-Exposed	90	90	90	90	84	85	90	78	79	90	74	74	90	70	69	89	66	65	85	62	61	81	59	57	74	54	52	68	49	47	62	45	43	58	42	39	54	39	37	51	37	34
				Exposed	90	68	68	87	64	63	82	60	58	77	56	54	73	53	51	69	50	48	66	48	45	63	45	43	57	41	39	53	38	36	49	35	33	45	33	0	42	0	0	40	0	0
		9:12	36.9	Non-Exposed	89	89	89	89	83	85	89	78	79	89	73	73	89	69	69	88	65	64	84	62	61	80	59	57	73	54	51	67	49	47	62	45	43	58	42	39	54	39	37	50	37	34
				Exposed	89	68	67	86	64	62	81	60	58	77	56	54	73	53	51	69	50	48	66	48	45	63	45	43	57	41	39	53	38	36	49	35	33	45	33	0	42	0	0	40	0	0
		10:12	39.8	Non-Exposed	89	88	89	89	83	84	89	78	78	89	73	73	89	69	68	88	65	64	84	62	60	80	59	57	73	53	51	67	49	46	62	45	42	58	42	39	54	39	37	50	37	34
				Exposed	89	68	67	86	64	62	81	60	58	76	56	54	72	53	51	69	50	48	65	48	45	62	45	43	57	41	39	52	38	36	48	35	33	45	33	0	42	0	0	40	0	0
		11:12	42.5	Non-Exposed	89	88	89	89	82	84	89	77	78	89	73	73	89	69	68	87	65	64	83	62	60	79	59	57	73	53	51	67	49	46	62	45	42	57	42	39	54	39	37	50	37	34
				Exposed	89	68	67	85	63	62	80	60	58	76	56	54	72	53	51	69	50	48	65	48	45	62	45	43	57	41	39	52	38	36	48	35	33	45	33	0	42	0	0	40	0	0
		12:12	45	Non-Exposed	88	87	88	88	82	83	88	77	77	88	73	72	88	69	68	87	65	64	83	62	60	79	59	57	72	53	51	67	49	46	62	45	42	57	42	39	54	39	37	50	37	34
				Exposed	88	68	67	85	63	62	80	59	58	76	56	54	72	53	51	68	50	48	65	48	45	62	45	43	57	41	39	52	38	36	48	35	33	45	33	0	42	0	0	40	0	0

Tamarack 2.3 Rail – Hip Flush-Mount on 30 Foot Maximum Mean Roof Height – Portrait – Panel Length = 68 Inches or Less

Ground Snow Load	Exposure Category	Roof Pitch	Roof Angle	Wind Speed (mph)	95			100			105			110			115			120			125			130			140			150			160			170			180			190		
				Roof Area	1	2	3	1	2	3	1	2	3	1	2	3	1	2	3	1	2	3	1	2	3	1	2	3	1	2	3	1	2	3	1	2	3	1	2	3	1	2	3	1	2	3
5	B	2:12	9.5	Non-Exposed	87	87	87	87	87	87	87	87	87	87	87	87	87	87	87	87	87	87	87	87	85	87	85	81	87	77	73	79	70	67	74	65	62	69	60	57	64	56	53	60	52	50
				Exposed	87	87	87	87	87	87	87	86	82	87	81	77	86	76	73	81	72	69	77	69	65	74	65	62	68	59	57	63	55	52	58	50	48	54	47	44	51	44	41	48	41	39
		3:12	14.0	Non-Exposed	85	85	85	85	85	85	85	85	85	85	85	85	85	85	85	85	85	85	85	85	84	85	84	80	85	76	73	79	70	67	73	65	61	68	60	57	64	56	53	60	52	50
				Exposed	85	85	85	85	85	85	85	85	81	85	80	76	85	76	72	81	72	68	77	68	65	74	65	62	68	59	56	62	54	52	58	50	48	54	47	44	51	43	41	48	41	39
		4:12	18.4	Non-Exposed	86	86	86	86	86	86	86	86	86	86	86	86	86	86	86	86	86	86	86	86	83	86	84	79	85	76	72	78	70	66	73	64	61	68	60	57	64	56	53	60	52	50
				Exposed	86	86	86	86	86	86	86	85	81	86	80	76	84	75	72	80	72	68	77	68	65	73	65	62	67	59	56	62	54	52	58	50	48	54	46	44	51	43	41	48	41	39
		5:12	22.6	Non-Exposed	86	86		86	86		86	86		86	86		86	86		86	86		86	86		86	86		86	85		86	78		86	72		84	67		78	62		73	58	
				Exposed	86	86		86	86		86	86		86	86		86	85		86	80		86	76		86	73		84	66		76	61		70	56		65	52		61	48		57	45	
		6:12	26.6	Non-Exposed	86	86		86	86		86	86		86	86		86	86		86	86		86	86		86	86		86	85		86	78		86	72		84	67		78	62		73	58	
				Exposed	86	86		86	86		86	86		86	86		86	84		86	80		86	76		86	72		83	66		76	60		70	56		65	52		60	48		56	45	
		7:12	30.3	Non-Exposed	87	87	87	87	87	87	87	87	87	87	87	87	87	87	87	87	87	87	87	87	87	87	83	85	87	75	75	87	69	68	86	63	62	79	58	56	74	54	52	69	50	48
				Exposed	87	87	87	87	87	87	87	84	86	87	79	80	87	75	75	87	71	70	87	67	66	86	63	62	79	58	56	72	53	50	67	48	46	62	45	42	58	42	39	54	39	37
		8:12	33.7	Non-Exposed	87	87	87	87	87	87	87	87	87	87	87	87	87	87	87	87	87	87	87	87	87	87	83	84	87	75	75	87	68	68	85	63	61	79	58	56	74	54	52	69	50	48
				Exposed	87	87	87	87	87	87	87	84	86	87	79	80	87	74	74	87	70	70	87	67	66	86	63	62	78	57	55	72	52	50	66	48	46	62	45	42	57	41	39	54	39	37
		9:12	36.9	Non-Exposed	88	88	88	88	88	88	88	88	88	88	88	88	88	88	88	88	88	88	88	87	88	88	82	84	88	75	75	88	68	67	85	63	61	79	58	56	73	54	52	69	50	48
				Exposed	88	88	88	88	88	88	88	83	85	88	78	79	88	74	74	88	70	69	88	66	65	85	63	62	78	57	55	72	52	50	66	48	46	61	45	42	57	41	39	54	39	36
		10:12	39.8	Non-Exposed	88	88	88	88	88	88	88	88	88	88	88	88	88	88	88	88	88	88	88	86	88	88	82	83	88	74	74	88	68	67	84	62	61	78	58	56	73	54	51	68	50	48
				Exposed	88	88	88	88	88	88	88	83	84	88	78	79	88	74	74	88	70	69	88	66	65	85	63	61	77	57	55	71	52	50	66	48	46	61	44	42	57	41	39	54	39	36
		11:12	42.5	Non-Exposed	89	89	89	89	89	89	89	89	89	89	89	89	89	89	89	89	89	89	89	86	88	89	81	83	89	74	74	89	68	67	84	62	61	78	58	56	73	53	51	68	50	48
				Exposed	89	89	89	89	88	89	89	82	84	89	78	78	89	73	73	89	69	69	88	66	65	84	63	61	77	57	55	71	52	50	66	48	45	61	44	42	57	41	39	53	39	36
		12:12	45	Non-Exposed	88	88	88	88	88	88	88	88	88	88	88	88	88	88	88	88	88	88	88	85	87	88	81	82	88	74	74	88	67	67	84	62	61	78	57	56	73	53	51	68	50	47
				Exposed	88	88	88	88	87	88	88	82	83	88	77	78	88	73	73	88	69	69	88	66	65	84	62	61	77	57	55	71	52	50	66	48	45	61	44	42	57	41	39	53	39	36
	C	2:12	9.5	Non-Exposed	87	87	87	87	87	87	87	87	85	87	85	80	87	80	76	85	76	72	81	72	68	77	68	65	71	62	59	65	57	54	61	52	50	57	49	46	53	45	43	50	42	41
				Exposed	87	79	75	83	74	70	78	69	66	74	65	62	70	62	59	67	58	56	64	55	53	61	53	50	56	48	46	52	44	42	48	41	39	45	39	37	42	36	35	40	34	33
		3:12	14.0	Non-Exposed	85	85	85	85	85	85	85	85	85	85	84	80	85	79	75	84	75	71	80	71	68	77	68	64	70	62	59	65	57	54	60	52	50	56	49	46	53	45	43	50	42	41
				Exposed	85	78	74	82	73	70	78	69	65	73	65	62	70	61	58	66	58	55	63	55	53	61	53	50	56	48	46	52	44	42	48	41	39	45	38	37	42	36	35	40	34	33
		4:12	18.4	Non-Exposed	86	86	86	86	86	86	86	86	84	86	83	79	86	79	75	83	75	71	80	71	67	76	67	64	70	62	59	65	57	54	60	52	50	56	48	46	53	45	43	50	42	41
				Exposed	86	78	74	81	73	69	77	68	65	73	65	61	69	61	58	66	58	55	63	55	52	60	53	50	56	48	46	51	44	42	48	41	39	45	38	37	42	36	35	40	34	33
		5:12	22.6	Non-Exposed	86	86		86	86		86	86		86	86		86	86		86	84		86	80		86	76		86	69		80	63		73	58		68	54		63	50		59	47	
				Exposed	86	86		86	82		86	77		86	72		86	68		82	65		78	62		74	59		67	54		62	49		57	45		53	42		49	40		46	38	
		6:12	26.6	Non-Exposed	86	86		86	86		86	86		86	86		86	86		86	83		86	79		86	75		86	69		79	63		73	58		68	54		63	50		59	47	
				Exposed	86	86		86	81		86	76		86	72		86	68		81	65		77	61		74	59		67	53		61	49		57	45		53	42		49	40		46	38	
		7:12	30.3	Non-Exposed	87	87	87	87	87	87	87	87	87	87	83	85	87	78	79	87	74	74	87	70	69	87	66	65	82	60	58	75	55	53	69	51	48	64	47	44	60	43	41	56	41	38
				Exposed	87	77	77	87	72	71	87	67	66	86	63	62	81	60	58	77	56	54	73	53	51	70	51	48	64	46	44	59	42	40	54	39	37	50	36	34	47	34	32	44	32	0
		8:12	33.7	Non-Exposed	87	87	87	87	87	87	87	87	87	87	82	84	87	78	78	87	73	73	87	70	69	87	66	65	82	60	58	75	55	53	69	50	48	64	47	44	60	43	41	56	41	38
				Exposed	87	76	77	87	71	71	87	67	66	86	63	62	81	59	58	77	56	54	73	53	51	70	51	48	64	46	43	58	42	40	54	39	37	50	36	34	47	34	32	44	32	0
		9:12	36.9	Non-Exposed	88	88	88	88	88	88	88	87	88	88	82	83	88	77	78	88	73	73	88	69	69	88	66	65	81	60	58	75	55	53	69	50	48	64	47	44	60	43	41	56	40	38
				Exposed	88	76	76	88	71	71	88	67	66	85	63	61	81	59	58	76	56	54	73	53	51	69	51	48	63	46	43	58	42	40	54	39	37	50	36	34	47	34	32	44	32	0
		10:12	39.8	Non-Exposed	88	88	88	88	88	88	88	87	88	88	82	83	88	77	77	88	73	73	88	69	68	88	66	64	81	60	58	74	55	52	69	50	48	64	46	44	60	43	41	56	40	38
				Exposed	88	76	76	88	71	70	88	67	66	85	63	61	80	59	57	76	56	54	72	53	51	69	51	48	63	46	43	58	42	40	54	39	37	50	36	34	47	34	32	44	32	0
		11:12	42.5	Non-Exposed	89	89	89	89	89	89	89	86	88	89	81	82	89	77	77	89	73	72	89	69	68	88	65	64	80	59	58	74	54	52	68	50	48	64	46	44	59	43	41	56	40	38
				Exposed	89	75	76	89	71	70	89	66	65	84	62	61	80	59	57	76	56	54	72	53	51	69	50	48	63	46	43	58	42	40	54	39	37	50	36	34	46	34	32	44	32	0
		12:12	45	Non-Exposed	88	88	88	88	88	88	88	86	88	88	81	82	88	76	77	88	72	72	88	69	68	87	65	64	80	59	58	74	54	52	68	50	48	63	46	44	59	43	41	56	40	38
				Exposed	88	75	75	88	70	70	88	66	65	84	62	61	79	59	57	76	56	54	72	53	51	69	50	48	63	46	43	58	42	40	54	39	36	50	36	34	46	34	32	43	32	0
	D	2:12	9.5	Non-Exposed	87	87	87	87	86	81	87	81	76	85	76	72	81	72	68	77	68	64	73	64	61	70	61	58	64	56	53	59	51	49	55	47	45	51	44	42	48	41	39	45	39	37
				Exposed	79	71	67	75	66	63	71	62	59	67	59	56	64	55	53	61	53	50	58	50	48	55	48	45	51	43	41	47	40	39	44	38	36	41	35	34	39	33	0	37	0	0
		3:12	14.0	Non-Exposed	85	85	85	85	85	81	85	80	76	84	75	72	80	71	68	76	67	64	73	64	61	69	61	58	64	56	53	59	51	49	55	47	45	51	44	42	48	41	39	45	39	37
				Exposed	79	70	67	74	66	63	70	62	59	67	58	56	63	55	53	60	52	50	58	50	47	55	47	45	51	43	41	47	40	39	44	38	36	41	35	34	39	33	0	37	0	0
		4:12	18.4	Non-Exposed	86	86	86	86	85	80	86	79	76	84	75	71	80	71	67	76	67	64	72	64	61	69	61	58	64	55	53	59	51	49	55	47	45	51	44	42	48	41	39	45	39	37
				Exposed	78	70	66	74	65	62	70	62	59	66	58	55	63	55	52	60	52	50	57	50	47	55	47	45	51	43	41	47	40	38	44	38	36	41	35	34	39	33	0	36	0	0
		5:12	22.6	Non-Exposed	86	86		86	86		86	86		86	84		86	79		86	75		86	72		86	68		78	62		72	57		66	53		61	49		57	46		53	43	
				Exposed	86	78		86	73		86	69		82	65		78	62		74	58		70	56		66	53		60	48		55	44		51	41		47	39		44	36		41	35	
		6:12	26.6	Non-Exposed	86	86		86	86		86	86		86	83		86	79		86	75		86	71		85	68		78	62		71	57		66	52		61	49		57	45		53	43	
				Exposed	86	78		86	73		86	69		82	65		77	61		73	58		69	55		66	53		60	48		55	44		51	41		47	39		44	36		41	34	
		7:12	30.3	Non-Exposed	87	87	87	87	84	86	87	79	80	87	74	74	87	70	69	87	66	65	85	63	61	81	59	58	74	54	52	68	49	47	63	45	43	58	42	39	54	39	37	51	37	34
				Exposed	87	69	68	87	64	63	82	60	58	77	57	55	73	53	51	70	51	48	66	48	45	63	46	43	57	41	39	53	38	36	49	35	33	45	33	0	42	0	0	40	0	0
		8:12	33.7	Non-Exposed	87	87	87	87	84	85	87	78	79	87	74	74	87	70	69	87	66	65	85	62	61	81	59	57	74	54	52	68	49	47	62	45	43	58	42	39	54	39	37	51	37	34
				Exposed	87	68	68	87	64	63	82	60	58	77	56	54	73	53	51	69	50	48	66	48	45	63	45	43	57	41	39	53	38	36	49	35	33	45	33	0	42	0	0	40	0	0
		9:12	36.9	Non-Exposed	88	88	88	88	83	85	88	78	79	88	73	73	88	69	69	88	65	64	84	62	61	80	59	57	73	54	51	67	49	47	62	45	43	58	42	39	54	39	37	50	37	34
				Exposed	88	68	67	86	64	62	81	60	58	77	56	54	73	53	51	69	50	48	66	48	45	63	45	43	57	41	39	53	38	36	49	35	33	45	33	0	42	0	0	40	0	0
		10:12	39.8	Non-Exposed	88	88	88	88	83	84	88	78	78	88	73	73	88	69	68	88	65	64	84	62	60	80	59	57	73	53	51	67	49	46	62	45	42	58	42	39	54	39	37	50	37	34
				Exposed	88	68	67	86	64	62	81	60	58	76	56	54	72	53	51	69	50	48	65	48	45	62	45	43	57	41	39	52	38	36	48	35	33	45	33	0	42	0	0	40	0	0
		11:12	42.5	Non-Exposed	89	88	89	89	82	84	89	77	78	89	73	73	89	69	68	87	65	64	83	62	60	79	59	57	73	53	51	67	49	46	62	45	42	57	42	39	54	39	37	50	37	34
				Exposed	89	68	67	85	63	62	80	60	58	76	56	54	72	53	51	69	50	48	65	48	45	62	45	43	57	41	39	52	38	36	48	35	33	45	33	0	42	0	0	40	0	0
		12:12	45	Non-Exposed	88	87	88	88	82	83	88	77	77	88	73	72	88	69	68	87	65	64	83	62	60	79	59	57	72	53	51	67	49	46	62	45	42	57	42	39	54	39	37	50	37	34
				Exposed	88	68	67	85	63	62	80	59	58	76	56	54	72	53	51	68	50	48	65	48	45	62	45	43	57	41	39	52	38	36	48	35	33	45	33	0	42	0	0	40	0	0

Tamarack 2.3 Rail – Hip Flush-Mount on 30 Foot Maximum Mean Roof Height – Portrait – Panel Length = 68 Inches or Less

Ground Snow Load	Exposure Category	Roof Pitch	Roof Angle	Wind Speed (mph)	95			100			105			110			115			120			125			130			140			150			160			170			180			190		
				Roof Area	1	2	3	1	2	3	1	2	3	1	2	3	1	2	3	1	2	3	1	2	3	1	2	3	1	2	3	1	2	3	1	2	3	1	2	3	1	2	3	1	2	3
10	B	2:12	9.5	Non-Exposed	76	76	76	76	76	76	76	76	76	76	76	76	76	76	76	76	76	76	76	76	76	76	76	76	76	76	73	76	70	67	74	65	62	69	60	57	64	56	53	60	52	50
				Exposed	76	76	76	76	76	76	76	76	76	76	76	76	76	76	73	76	72	69	76	69	65	74	65	62	68	59	57	63	55	52	58	50	48	54	47	44	51	44	41	48	41	39
		3:12	14.0	Non-Exposed	74	74	74	74	74	74	74	74	74	74	74	74	74	74	74	74	74	74	74	74	74	74	74	74	74	74	73	74	70	67	73	65	61	68	60	57	64	56	53	60	52	50
				Exposed	74	74	74	74	74	74	74	74	74	74	74	74	74	74	72	74	72	68	74	68	65	74	65	62	68	59	56	62	54	52	58	50	48	54	47	44	51	43	41	48	41	39
		4:12	18.4	Non-Exposed	76	76	76	76	76	76	76	76	76	76	76	76	76	76	76	76	76	76	76	76	76	76	76	76	76	76	72	76	70	66	73	64	61	68	60	57	64	56	53	60	52	50
				Exposed	76	76	76	76	76	76	76	76	76	76	76	76	76	75	72	76	72	68	76	68	65	73	65	62	67	59	56	62	54	52	58	50	48	54	46	44	51	43	41	48	41	39
		5:12	22.6	Non-Exposed	77	77		77	77		77	77		77	77		77	77		77	77		77	77		77	77		77	77		77	77		77	72		77	67		75	62		73	58	
				Exposed	77	77		77	77		77	77		77	77		77	77		77	77		77	76		77	73		77	66		76	61		70	56		65	52		61	48		57	45	
		6:12	26.6	Non-Exposed	77	77		77	77		77	77		77	77		77	77		77	77		77	77		77	77		77	77		77	77		77	72		77	67		76	62		73	58	
				Exposed	77	77		77	77		77	77		77	77		77	77		77	77		77	76		77	72		77	66		76	60		70	56		65	52		60	48		56	45	
		7:12	30.3	Non-Exposed	78	78	78	78	78	78	78	78	78	78	78	78	78	78	78	78	78	78	78	78	78	78	78	78	78	75	75	78	69	68	78	63	62	78	58	56	74	54	52	69	50	48
				Exposed	78	78	78	78	78	78	78	78	78	78	78	78	78	75	75	78	71	70	78	67	66	78	63	62	78	58	56	72	53	50	67	48	46	62	45	42	58	42	39	54	39	37
		8:12	33.7	Non-Exposed	79	79	79	79	79	79	79	79	79	79	79	79	79	79	79	79	79	79	79	79	79	79	79	79	79	75	75	79	68	68	79	63	61	79	58	56	74	54	52	69	50	48
				Exposed	79	79	79	79	79	79	79	79	79	79	79	79	79	74	74	79	70	70	79	67	66	79	63	62	78	57	55	72	52	50	66	48	46	62	45	42	57	41	39	54	39	37
		9:12	36.9	Non-Exposed	80	80	80	80	80	80	80	80	80	80	80	80	80	80	80	80	80	80	80	80	80	80	80	80	80	75	75	80	68	67	80	63	61	79	58	56	73	54	52	69	50	48
				Exposed	80	80	80	80	80	80	80	80	80	80	78	79	80	74	74	80	70	69	80	66	65	80	63	62	78	57	55	72	52	50	66	48	46	61	45	42	57	41	39	54	39	36
		10:12	39.8	Non-Exposed	81	81	81	81	81	81	81	81	81	81	81	81	81	81	81	81	81	81	81	81	81	81	81	81	81	74	74	81	68	67	81	62	61	78	58	56	73	54	51	68	50	48
				Exposed	81	81	81	81	81	81	81	81	81	81	78	79	81	74	74	81	70	69	81	66	65	81	63	61	77	57	55	71	52	50	66	48	46	61	44	42	57	41	39	54	39	36
		11:12	42.5	Non-Exposed	82	82	82	82	82	82	82	82	82	82	82	82	82	82	82	82	82	82	82	82	82	82	81	82	82	74	74	82	68	67	82	62	61	78	58	56	73	53	51	68	50	48
				Exposed	82	82	82	82	82	82	82	82	82	82	78	78	82	73	73	82	69	69	82	66	65	82	63	61	77	57	55	71	52	50	66	48	45	61	44	42	57	41	39	53	39	36
		12:12	45	Non-Exposed	84	84	84	84	84	84	84	84	84	84	84	84	84	84	84	84	84	84	84	84	84	84	81	82	84	74	74	84	67	67	84	62	61	78	57	56	73	53	51	68	50	47
				Exposed	84	84	84	84	84	84	84	82	83	84	77	78	84	73	73	84	69	69	84	66	65	84	62	61	77	57	55	71	52	50	66	48	45	61	44	42	57	41	39	53	39	36
	C	2:12	9.5	Non-Exposed	76	76	76	76	76	76	76	76	76	76	76	76	76	76	76	76	76	72	76	72	68	76	68	65	71	62	59	65	57	54	61	52	50	57	49	46	53	45	43	50	42	41
				Exposed	76	76	75	76	74	70	76	69	66	74	65	62	70	62	59	67	58	56	64	55	53	61	53	50	56	48	46	52	44	42	48	41	39	45	39	37	42	36	35	40	34	33
		3:12	14.0	Non-Exposed	74	74	74	74	74	74	74	74	74	74	74	74	74	74	74	74	74	71	74	71	68	74	68	64	70	62	59	65	57	54	60	52	50	56	49	46	53	45	43	50	42	41
				Exposed	74	74	74	74	73	70	74	69	65	73	65	62	70	61	58	66	58	55	63	55	53	61	53	50	56	48	46	52	44	42	48	41	39	45	38	37	42	36	35	40	34	33
		4:12	18.4	Non-Exposed	76	76	76	76	76	76	76	76	76	76	76	76	76	76	75	76	75	71	76	71	67	76	67	64	70	62	59	65	57	54	60	52	50	56	48	46	53	45	43	50	42	41
				Exposed	76	76	74	76	73	69	76	68	65	73	65	61	69	61	58	66	58	55	63	55	52	60	53	50	56	48	46	51	44	42	48	41	39	45	38	37	42	36	35	40	34	33
		5:12	22.6	Non-Exposed	77	77		77	77		77	77		77	77		77	77		77	77		77	77		77	76		77	69		76	63		73	58		68	54		63	50		59	47	
				Exposed	77	77		77	77		77	77		77	72		77	68		77	65		77	62		74	59		67	54		62	49		57	45		53	42		49	40		46	38	
		6:12	26.6	Non-Exposed	77	77		77	77		77	77		77	77		77	77		77	77		77	77		77	75		77	69		76	63		73	58		68	54		63	50		59	47	
				Exposed	77	77		77	77		77	76		77	72		77	68		77	65		77	61		74	59		67	53		61	49		57	45		53	42		49	40		46	38	
10		7:12	30.3	Non-Exposed	78	78	78	78	78	78	78	78	78	78	78	78	78	78	78	78	74	74	78	70	69	78	66	65	78	60	58	75	55	53	69	51	48	64	47	44	60	43	41	56	41	38
				Exposed	78	77	77	78	72	71	78	67	66	78	63	62	78	60	58	77	56	54	73	53	51	70	51	48	64	46	44	59	42	40	54	39	37	50	36	34	47	34	32	44	32	0
		8:12	33.7	Non-Exposed	79	79	79	79	79	79	79	79	79	79	79	79	79	78	78	79	73	73	79	70	69	79	66	65	79	60	58	75	55	53	69	50	48	64	47	44	60	43	41	56	41	38
				Exposed	79	76	77	79	71	71	79	67	66	79	63	62	79	59	58	77	56	54	73	53	51	70	51	48	64	46	43	58	42	40	54	39	37	50	36	34	47	34	32	44	32	0
		9:12	36.9	Non-Exposed	80	80	80	80	80	80	80	80	80	80	80	80	80	77	78	80	73	73	80	69	69	80	66	65	80	60	58	75	55	53	69	50	48	64	47	44	60	43	41	56	40	38
				Exposed	80	76	76	80	71	71	80	67	66	80	63	61	80	59	58	76	56	54	73	53	51	69	51	48	63	46	43	58	42	40	54	39	37	50	36	34	47	34	32	44	32	0
		10:12	39.8	Non-Exposed	81	81	81	81	81	81	81	81	81	81	81	81	81	77	77	81	73	73	81	69	68	81	66	64	81	60	58	74	55	52	69	50	48	64	46	44	60	43	41	56	40	38
				Exposed	81	76	76	81	71	70	81	67	66	81	63	61	80	59	57	76	56	54	72	53	51	69	51	48	63	46	43	58	42	40	54	39	37	50	36	34	47	34	32	44	32	0
		11:12	42.5	Non-Exposed	82	82	82	82	82	82	82	82	82	82	81	82	82	77	77	82	73	72	82	69	68	82	65	64	80	59	58	74	54	52	68	50	48	64	46	44	59	43	41	56	40	38
				Exposed	82	75	76	82	71	70	82	66	65	82	62	61	80	59	57	76	56	54	72	53	51	69	50	48	63	46	43	58	42	40	54	39	37	50	36	34	46	34	32	44	32	0
		12:12	45	Non-Exposed	84	84	84	84	84	84	84	84	84	84	81	82	84	76	77	84	72	72	84	69	68	84	65	64	80	59	58	74	54	52	68	50	48	63	46	44	59	43	41	56	40	38
				Exposed	84	75	75	84	70	70	84	66	65	84	62	61	79	59	57	76	56	54	72	53	51	69	50	48	63	46	43	58	42	40	54	39	36	50	36	34	46	34	32	43	32	0
	D	2:12	9.5	Non-Exposed	76	76	76	76	76	76	76	76	76	76	76	72	76	72	68	76	68	64	73	64	61	70	61	58	64	56	53	59	51	49	55	47	45	51	44	42	48	41	39	45	39	37
				Exposed	76	71	67	75	66	63	71	62	59	67	59	56	64	55	53	61	53	50	58	50	48	55	48	45	51	43	41	47	40	39	44	38	36	41	35	34	39	33	0	37	0	0
		3:12	14.0	Non-Exposed	74	74	74	74	74	74	74	74	74	74	74	72	74	71	68	74	67	64	73	64	61	69	61	58	64	56	53	59	51	49	55	47	45	51	44	42	48	41	39	45	39	37
				Exposed	74	70	67	74	66	63	70	62	59	67	58	56	63	55	53	60	52	50	58	50	47	55	47	45	51	43	41	47	40	39	44	38	36	41	35	34	39	33	0	37	0	0
		4:12	18.4	Non-Exposed	76	76	76	76	76	76	76	76	76	76	75	71	76	71	67	76	67	64	72	64	61	69	61	58	64	55	53	59	51	49	55	47	45	51	44	42	48	41	39	45	39	37
				Exposed	76	70	66	74	65	62	70	62	59	66	58	55	63	55	52	60	52	50	57	50	47	55	47	45	51	43	41	47	40	38	44	38	36	41	35	34	39	33	0	36	0	0
		5:12	22.6	Non-Exposed	77	77		77	77		77	77		77	77		77	77		77	75		77	72		77	68		75	62		72	57		66	53		61	49		57	46		53	43	
				Exposed	77	77		77	73		77	69		77	65		77	62		74	58		70	56		66	53		60	48		55	44		51	41		47	39		44	36		41	35	
		6:12	26.6	Non-Exposed	77	77		77	77		77	77		77	77		77	77		77	75		77	71		77	68		76	62		71	57		66	52		61	49		57	45		53	43	
				Exposed	77	77		77	73		77	69		77	65		77	61		73	58		69	55		66	53		60	48		55	44		51	41		47	39		44	36		41	34	
		7:12	30.3	Non-Exposed	78	78	78	78	78	78	78	78	78	78	74	74	78	70	69	78	66	65	78	63	61	78	59	58	74	54	52	68	49	47	63	45	43	58	42	39	54	39	37	51	37	34
				Exposed	78	69	68	78	64	63	78	60	58	77	57	55	73	53	51	70	51	48	66	48	45	63	46	43	57	41	39	53	38	36	49	35	33	45	33	0	42	0	0	40	0	0
		8:12	33.7	Non-Exposed	79	79	79	79	79	79	79	78	79	79	74	74	79	70	69	79	66	65	79	62	61	79	59	57	74	54	52	68	49	47	62	45	43	58	42	39	54	39	37	51	37	34
				Exposed	79	68	68	79	64	63	79	60	58	77	56	54	73	53	51	69	50	48	66	48	45	63	45	43	57	41	39	53	38	36	49	35	33	45	33	0	42	0	0	40	0	0
		9:12	36.9	Non-Exposed	80	80	80	80	80	80	80	78	79	80	73	73	80	69	69	80	65	64	80	62	61	80	59	57	73	54	51	67	49	47	62	45	43	58	42	39	54	39	37	50	37	34
				Exposed	80	68	67	80	64	62	80	60	58	77	56	54	73	53	51	69	50	48	66	48	45	63	45	43	57	41	39	53	38	36	49	35	33	45	33	0	42	0	0	40	0	0
		10:12	39.8	Non-Exposed	81	81	81	81	81	81	81	78	78	81	73	73	81	69	68	81	65	64	81	62	60	80	59	57	73	53	51	67	49	46	62	45	42	58	42	39	54	39	37	50	37	34
				Exposed	81	68	67	81	64	62	81	60	58	76	56	54	72	53	51	69	50	48	65	48	45	62	45	43	57	41	39	52	38	36	48	35	33	45	33	0	42	0	0	40	0	0
		11:12	42.5	Non-Exposed	82	82	82	82	82	82	82	77	78	82	73	73	82	69	68	82	65	64	82	62	60	79	59	57	73	53	51	67	49	46	62	45	42	57	42	39	54	39	37	50	37	34
				Exposed	82	68	67	82	63	62	80	60	58	76	56	54	72	53	51	69	50	48	65	48	45	62	45	43	57	41	39	52	38	36	48	35	33	45	33	0	42	0	0	40	0	0
		12:12	45	Non-Exposed	84	84	84	84	82	83	84	77	77	84	73	72	84	69	68	84	65	64	83	62	60	79	59	57	72	53	51	67	49	46	62	45	42	57	42	39	54	39	37	50	37	34
				Exposed	84	68	67	84	63	62	80	59	58	76	56	54	72	53	51	68	50	48	65	48	45	62	45	43	57	41	39	52	38	36	48	35	33	45	33	0	42	0	0	40	0	0

Tamarack 2.3 Rail – Hip Flush-Mount on 30 Foot Maximum Mean Roof Height – Portrait – Panel Length = 68 Inches or Less

Ground Snow Load	Exposure Category	Roof Pitch	Roof Angle	Wind Speed (mph)	95			100			105			110			115			120			125			130			140			150			160			170			180			190		
				Roof Area	1	2	3	1	2	3	1	2	3	1	2	3	1	2	3	1	2	3	1	2	3	1	2	3	1	2	3	1	2	3	1	2	3	1	2	3	1	2	3	1	2	3
15	B	2:12	9.5	Non-Exposed	68	68	68	68	68	68	68	68	68	68	68	68	68	68	68	68	68	68	68	68	68	68	68	68	68	68	68	68	68	67	68	65	62	68	60	57	64	56	53	60	52	50
				Exposed	68	68	68	68	68	68	68	68	68	68	68	68	68	68	68	68	68	68	68	68	65	68	65	62	68	59	57	63	55	52	58	50	48	54	47	44	51	44	41	48	41	39
		3:12	14.0	Non-Exposed	66	66	66	66	66	66	66	66	66	66	66	66	66	66	66	66	66	66	66	66	66	66	66	66	66	66	66	66	66	66	66	65	61	66	60	57	64	56	53	60	52	50
				Exposed	66	66	66	66	66	66	66	66	66	66	66	66	66	66	66	66	66	66	66	66	65	66	65	62	66	59	56	62	54	52	58	50	48	54	47	44	51	43	41	48	41	39
		4:12	18.4	Non-Exposed	69	69	69	69	69	69	69	69	69	69	69	69	69	69	69	69	69	69	69	69	69	69	69	69	69	69	69	69	69	66	69	64	61	68	60	57	64	56	53	60	52	50
				Exposed	69	69	69	69	69	69	69	69	69	69	69	69	69	69	69	69	69	68	69	68	65	69	65	62	67	59	56	62	54	52	58	50	48	54	46	44	51	43	41	48	41	39
		5:12	22.6	Non-Exposed	70	70		70	70		70	70		70	70		70	70		70	70		70	70		70	70		70	70		70	70		70	70		69	67		68	62		67	58	
				Exposed	70	70		70	70		70	70		70	70		70	70		70	70		70	70		70	70		70	66		70	61		70	56		65	52		61	48		57	45	
		6:12	26.6	Non-Exposed	70	70		70	70		70	70		70	70		70	70		70	70		70	70		70	70		70	70		70	70		70	70		70	67		69	62		68	58	
				Exposed	70	70		70	70		70	70		70	70		70	70		70	70		70	70		70	70		70	66		70	60		70	56		65	52		60	48		56	45	
		7:12	30.3	Non-Exposed	72	72	72	72	72	72	72	72	72	72	72	72	72	72	72	72	72	72	72	72	72	72	72	72	72	72	72	72	69	68	72	63	62	72	58	56	70	54	52	69	50	48
				Exposed	72	72	72	72	72	72	72	72	72	72	72	72	72	72	72	72	71	70	72	67	66	72	63	62	72	58	56	72	53	50	67	48	46	62	45	42	58	42	39	54	39	37
		8:12	33.7	Non-Exposed	73	73	73	73	73	73	73	73	73	73	73	73	73	73	73	73	73	73	73	73	73	73	73	73	73	73	73	73	68	68	73	63	61	73	58	56	72	54	52	69	50	48
				Exposed	73	73	73	73	73	73	73	73	73	73	73	73	73	73	73	73	70	70	73	67	66	73	63	62	73	57	55	72	52	50	66	48	46	62	45	42	57	41	39	54	39	37
		9:12	36.9	Non-Exposed	74	74	74	74	74	74	74	74	74	74	74	74	74	74	74	74	74	74	74	74	74	74	74	74	74	74	74	74	68	67	74	63	61	74	58	56	73	54	52	69	50	48
				Exposed	74	74	74	74	74	74	74	74	74	74	74	74	74	74	74	74	70	69	74	66	65	74	63	62	74	57	55	72	52	50	66	48	46	61	45	42	57	41	39	54	39	36
		10:12	39.8	Non-Exposed	76	76	76	76	76	76	76	76	76	76	76	76	76	76	76	76	76	76	76	76	76	76	76	76	76	74	74	76	68	67	76	62	61	76	58	56	73	54	51	68	50	48
				Exposed	76	76	76	76	76	76	76	76	76	76	76	76	76	74	74	76	70	69	76	66	65	76	63	61	76	57	55	71	52	50	66	48	46	61	44	42	57	41	39	54	39	36
		11:12	42.5	Non-Exposed	77	77	77	77	77	77	77	77	77	77	77	77	77	77	77	77	77	77	77	77	77	77	77	77	77	74	74	77	68	67	77	62	61	77	58	56	73	53	51	68	50	48
				Exposed	77	77	77	77	77	77	77	77	77	77	77	77	77	73	73	77	69	69	77	66	65	77	63	61	77	57	55	71	52	50	66	48	45	61	44	42	57	41	39	53	39	36
		12:12	45	Non-Exposed	79	79	79	79	79	79	79	79	79	79	79	79	79	79	79	79	79	79	79	79	79	79	79	79	79	74	74	79	67	67	79	62	61	78	57	56	73	53	51	68	50	47
				Exposed	79	79	79	79	79	79	79	79	79	79	77	78	79	73	73	79	69	69	79	66	65	79	62	61	77	57	55	71	52	50	66	48	45	61	44	42	57	41	39	53	39	36
	C	2:12	9.5	Non-Exposed	68	68	68	68	68	68	68	68	68	68	68	68	68	68	68	68	68	68	68	68	68	68	68	68	68	62	59	65	57	54	61	52	50	57	49	46	53	45	43	50	42	41
				Exposed	68	68	68	68	68	68	68	68	66	68	65	62	68	62	59	67	58	56	64	55	53	61	53	50	56	48	46	52	44	42	48	41	39	45	39	37	42	36	35	40	34	33
		3:12	14.0	Non-Exposed	66	66	66	66	66	66	66	66	66	66	66	66	66	66	66	66	66	66	66	66	66	66	66	64	66	62	59	65	57	54	60	52	50	56	49	46	53	45	43	50	42	41
				Exposed	66	66	66	66	66	66	66	66	65	66	65	62	66	61	58	66	58	55	63	55	53	61	53	50	56	48	46	52	44	42	48	41	39	45	38	37	42	36	35	40	34	33
		4:12	18.4	Non-Exposed	69	69	69	69	69	69	69	69	69	69	69	69	69	69	69	69	69	69	69	69	67	69	67	64	69	62	59	65	57	54	60	52	50	56	48	46	53	45	43	50	42	41
				Exposed	69	69	69	69	69	69	69	68	65	69	65	61	69	61	58	66	58	55	63	55	52	60	53	50	56	48	46	51	44	42	48	41	39	45	38	37	42	36	35	40	34	33
		5:12	22.6	Non-Exposed	70	70		70	70		70	70		70	70		70	70		70	70		70	70		70	70		70	69		68	63		67	58		65	54		63	50		59	47	
				Exposed	70	70		70	70		70	70		70	70		70	68		70	65		70	62		70	59		67	54		62	49		57	45		53	42		49	40		46	38	
		6:12	26.6	Non-Exposed	70	70		70	70		70	70		70	70		70	70		70	70		70	70		70	70		70	69		69	63		68	58		66	54		63	50		59	47	
				Exposed	70	70		70	70		70	70		70	70		70	68		70	65		70	61		70	59		67	53		61	49		57	45		53	42		49	40		46	38	
15		7:12	30.3	Non-Exposed	72	72	72	72	72	72	72	72	72	72	72	72	72	72	72	72	72	72	72	70	69	72	66	65	72	60	58	71	55	53	69	51	48	64	47	44	60	43	41	56	41	38
				Exposed	72	72	72	72	72	71	72	67	66	72	63	62	72	60	58	72	56	54	72	53	51	70	51	48	64	46	44	59	42	40	54	39	37	50	36	34	47	34	32	44	32	0
		8:12	33.7	Non-Exposed	73	73	73	73	73	73	73	73	73	73	73	73	73	73	73	73	73	73	73	70	69	73	66	65	73	60	58	72	55	53	69	50	48	64	47	44	60	43	41	56	41	38
				Exposed	73	73	73	73	71	71	73	67	66	73	63	62	73	59	58	73	56	54	73	53	51	70	51	48	64	46	43	58	42	40	54	39	37	50	36	34	47	34	32	44	32	0
		9:12	36.9	Non-Exposed	74	74	74	74	74	74	74	74	74	74	74	74	74	74	74	74	73	73	74	69	69	74	66	65	74	60	58	73	55	53	69	50	48	64	47	44	60	43	41	56	40	38
				Exposed	74	74	74	74	71	71	74	67	66	74	63	61	74	59	58	74	56	54	73	53	51	69	51	48	63	46	43	58	42	40	54	39	37	50	36	34	47	34	32	44	32	0
		10:12	39.8	Non-Exposed	76	76	76	76	76	76	76	76	76	76	76	76	76	76	76	76	73	73	76	69	68	76	66	64	76	60	58	74	55	52	69	50	48	64	46	44	60	43	41	56	40	38
				Exposed	76	76	76	76	71	70	76	67	66	76	63	61	76	59	57	76	56	54	72	53	51	69	51	48	63	46	43	58	42	40	54	39	37	50	36	34	47	34	32	44	32	0
		11:12	42.5	Non-Exposed	77	77	77	77	77	77	77	77	77	77	77	77	77	77	77	77	73	72	77	69	68	77	65	64	77	59	58	74	54	52	68	50	48	64	46	44	59	43	41	56	40	38
				Exposed	77	75	76	77	71	70	77	66	65	77	62	61	77	59	57	76	56	54	72	53	51	69	50	48	63	46	43	58	42	40	54	39	37	50	36	34	46	34	32	44	32	0
		12:12	45	Non-Exposed	79	79	79	79	79	79	79	79	79	79	79	79	79	76	77	79	72	72	79	69	68	79	65	64	79	59	58	74	54	52	68	50	48	63	46	44	59	43	41	56	40	38
				Exposed	79	75	75	79	70	70	79	66	65	79	62	61	79	59	57	76	56	54	72	53	51	69	50	48	63	46	43	58	42	40	54	39	36	50	36	34	46	34	32	43	32	0
	D	2:12	9.5	Non-Exposed	68	68	68	68	68	68	68	68	68	68	68	68	68	68	68	68	68	64	68	64	61	68	61	58	64	56	53	59	51	49	55	47	45	51	44	42	48	41	39	45	39	37
				Exposed	68	68	67	68	66	63	68	62	59	67	59	56	64	55	53	61	53	50	58	50	48	55	48	45	51	43	41	47	40	39	44	38	36	41	35	34	39	33	0	37	0	0
		3:12	14.0	Non-Exposed	66	66	66	66	66	66	66	66	66	66	66	66	66	66	66	66	66	64	66	64	61	66	61	58	64	56	53	59	51	49	55	47	45	51	44	42	48	41	39	45	39	37
				Exposed	66	66	66	66	66	63	66	62	59	66	58	56	63	55	53	60	52	50	58	50	47	55	47	45	51	43	41	47	40	39	44	38	36	41	35	34	39	33	0	37	0	0
		4:12	18.4	Non-Exposed	69	69	69	69	69	69	69	69	69	69	69	69	69	69	67	69	67	64	69	64	61	69	61	58	64	55	53	59	51	49	55	47	45	51	44	42	48	41	39	45	39	37
				Exposed	69	69	66	69	65	62	69	62	59	66	58	55	63	55	52	60	52	50	57	50	47	55	47	45	51	43	41	47	40	38	44	38	36	41	35	34	39	33	0	36	0	0
		5:12	22.6	Non-Exposed	70	70		70	70		70	70		70	70		70	70		70	70		70	70		70	68		68	62		66	57		64	53		61	49		57	46		53	43	
				Exposed	70	70		70	70		70	69		70	65		70	62		70	58		70	56		66	53		60	48		55	44		51	41		47	39		44	36		41	35	
		6:12	26.6	Non-Exposed	70	70		70	70		70	70		70	70		70	70		70	70		70	70		70	68		69	62		67	57		65	52		61	49		57	45		53	43	
				Exposed	70	70		70	70		70	69		70	65		70	61		70	58		69	55		66	53		60	48		55	44		51	41		47	39		44	36		41	34	
		7:12	30.3	Non-Exposed	72	72	72	72	72	72	72	72	72	72	72	72	72	70	69	72	66	65	72	63	61	72	59	58	70	54	52	68	49	47	63	45	43	58	42	39	54	39	37	51	37	34
				Exposed	72	69	68	72	64	63	72	60	58	72	57	55	72	53	51	70	51	48	66	48	45	63	46	43	57	41	39	53	38	36	49	35	33	45	33	0	42	0	0	40	0	0
		8:12	33.7	Non-Exposed	73	73	73	73	73	73	73	73	73	73	73	73	73	70	69	73	66	65	73	62	61	73	59	57	72	54	52	68	49	47	62	45	43	58	42	39	54	39	37	51	37	34
				Exposed	73	68	68	73	64	63	73	60	58	73	56	54	73	53	51	69	50	48	66	48	45	63	45	43	57	41	39	53	38	36	49	35	33	45	33	0	42	0	0	40	0	0
		9:12	36.9	Non-Exposed	74	74	74	74	74	74	74	74	74	74	73	73	74	69	69	74	65	64	74	62	61	74	59	57	73	54	51	67	49	47	62	45	43	58	42	39	54	39	37	50	37	34
				Exposed	74	68	67	74	64	62	74	60	58	74	56	54	73	53	51	69	50	48	66	48	45	63	45	43	57	41	39	53	38	36	49	35	33	45	33	0	42	0	0	40	0	0
		10:12	39.8	Non-Exposed	76	76	76	76	76	76	76	76	76	76	73	73	76	69	68	76	65	64	76	62	60	76	59	57	73	53	51	67	49	46	62	45	42	58	42	39	54	39	37	50	37	34
				Exposed	76	68	67	76	64	62	76	60	58	76	56	54	72	53	51	69	50	48	65	48	45	62	45	43	57	41	39	52	38	36	48	35	33	45	33	0	42	0	0	40	0	0
		11:12	42.5	Non-Exposed	77	77	77	77	77	77	77	77	77	77	73	73	77	69	68	77	65	64	77	62	60	77	59	57	73	53	51	67	49	46	62	45	42	57	42	39	54	39	37	50	37	34
				Exposed	77	68	67	77	63	62	77	60	58	76	56	54	72	53	51	69	50	48	65	48	45	62	45	43	57	41	39	52	38	36	48	35	33	45	33	0	42	0	0	40	0	0
		12:12	45	Non-Exposed	79	79	79	79	79	79	79	77	77	79	73	72	79	69	68	79	65	64	79	62	60	79	59	57	72	53	51	67	49	46	62	45	42	57	42	39	54	39	37	50	37	34
				Exposed	79	68	67	79	63	62	79	59	58	76	56	54	72	53	51	68	50	48	65	48	45	62	45	43	57	41	39	52	38	36	48	35	33	45	33	0	42	0	0	40	0	0

Tamarack 2.3 Rail – Hip Flush-Mount on 30 Foot Maximum Mean Roof Height – Portrait – Panel Length = 68 Inches or Less

Ground Snow Load	Exposure Category	Roof Pitch	Roof Angle	Wind Speed (mph)	95			100			105			110			115			120			125			130			140			150			160			170			180			190		
				Roof Area	1	2	3	1	2	3	1	2	3	1	2	3	1	2	3	1	2	3	1	2	3	1	2	3	1	2	3	1	2	3	1	2	3	1	2	3	1	2	3	1	2	3
20	B	2:12	9.5	Non-Exposed	62	62	62	62	62	62	62	62	62	62	62	62	62	62	62	62	62	62	62	62	62	62	62	62	62	62	62	62	62	62	62	62	62	62	60	57	61	56	53	60	52	50
				Exposed	62	62	62	62	62	62	62	62	62	62	62	62	62	62	62	62	62	62	62	62	62	62	62	62	62	59	57	62	55	52	58	50	48	54	47	44	51	44	41	48	41	39
		3:12	14.0	Non-Exposed	60	60	60	60	60	60	60	60	60	60	60	60	60	60	60	60	60	60	60	60	60	60	60	60	60	60	60	60	60	60	60	60	60	60	60	57	59	56	53	58	52	50
				Exposed	60	60	60	60	60	60	60	60	60	60	60	60	60	60	60	60	60	60	60	60	60	60	60	60	60	59	56	60	54	52	58	50	48	54	47	44	51	43	41	48	41	39
		4:12	18.4	Non-Exposed	64	64	64	64	64	64	64	64	64	64	64	64	64	64	64	64	64	64	64	64	64	64	64	64	64	64	64	64	64	64	64	64	61	63	60	57	62	56	53	60	52	50
				Exposed	64	64	64	64	64	64	64	64	64	64	64	64	64	64	64	64	64	64	64	64	62	64	59	56	62	54	52	58	50	48	54	46	44	51	43	41	48	41	39	48	41	39
		5:12	22.6	Non-Exposed	64	64		64	64		64	64		64	64		64	64		64	64		64	64		64	64		64	64		64	64		64	64		64	64		63	62		62	58	
				Exposed	64	64		64	64		64	64		64	64		64	64		64	64		64	64		64	64		64	64		64	61		64	56		64	52		61	48		57	45	
		6:12	26.6	Non-Exposed	65	65		65	65		65	65		65	65		65	65		65	65		65	65		65	65		65	65		65	65		65	65		65	65		64	62		62	58	
				Exposed	65	65		65	65		65	65		65	65		65	65		65	65		65	65		65	65		65	65		65	60		65	56		65	52		60	48		56	45	
		7:12	30.3	Non-Exposed	66	66	66	66	66	66	66	66	66	66	66	66	66	66	66	66	66	66	66	66	66	66	66	66	66	66	66	66	66	66	66	63	62	66	58	56	65	54	52	64	50	48
				Exposed	66	66	66	66	66	66	66	66	66	66	66	66	66	66	66	66	66	66	66	66	66	66	63	62	66	58	56	66	53	50	66	48	46	62	45	42	58	42	39	54	39	37
		8:12	33.7	Non-Exposed	68	68	68	68	68	68	68	68	68	68	68	68	68	68	68	68	68	68	68	68	68	68	68	68	68	68	68	68	68	68	68	63	61	68	58	56	67	54	52	65	50	48
				Exposed	68	68	68	68	68	68	68	68	68	68	68	68	68	68	68	68	68	68	68	67	66	68	63	62	68	57	55	68	52	50	66	48	46	62	45	42	57	41	39	54	39	37
		9:12	36.9	Non-Exposed	70	70	70	70	70	70	70	70	70	70	70	70	70	70	70	70	70	70	70	70	70	70	70	70	70	70	70	70	68	67	70	63	61	70	58	56	68	54	52	67	50	48
				Exposed	70	70	70	70	70	70	70	70	70	70	70	70	70	70	70	70	70	69	70	66	65	70	63	62	70	57	55	70	52	50	66	48	46	61	45	42	57	41	39	54	39	36
		10:12	39.8	Non-Exposed	71	71	71	71	71	71	71	71	71	71	71	71	71	71	71	71	71	71	71	71	71	71	71	71	71	71	71	71	68	67	71	62	61	71	58	56	70	54	51	68	50	48
				Exposed	71	71	71	71	71	71	71	71	71	71	71	71	71	71	71	71	70	69	71	66	65	71	63	61	71	57	55	71	52	50	66	48	46	61	44	42	57	41	39	54	39	36
		11:12	42.5	Non-Exposed	73	73	73	73	73	73	73	73	73	73	73	73	73	73	73	73	73	73	73	73	73	73	73	73	73	73	73	73	68	67	73	62	61	73	58	56	72	53	51	68	50	48
				Exposed	73	73	73	73	73	73	73	73	73	73	73	73	73	73	73	73	69	69	73	66	65	73	63	61	73	57	55	71	52	50	66	48	45	61	44	42	57	41	39	53	39	36
		12:12	45	Non-Exposed	75	75	75	75	75	75	75	75	75	75	75	75	75	75	75	75	75	75	75	75	75	75	75	75	75	74	74	75	67	67	75	62	61	75	57	56	73	53	51	68	50	47
				Exposed	75	75	75	75	75	75	75	75	75	75	75	75	75	73	73	75	69	69	75	66	65	75	62	61	75	57	55	71	52	50	66	48	45	61	44	42	57	41	39	53	39	36
	C	2:12	9.5	Non-Exposed	62	62	62	62	62	62	62	62	62	62	62	62	62	62	62	62	62	62	62	62	62	62	62	62	62	62	59	61	57	54	60	52	50	57	49	46	53	45	43	50	42	41
				Exposed	62	62	62	62	62	62	62	62	62	62	62	62	62	62	59	62	58	56	62	55	53	61	53	50	56	48	46	52	44	42	48	41	39	45	39	37	42	36	35	40	34	33
		3:12	14.0	Non-Exposed	60	60	60	60	60	60	60	60	60	60	60	60	60	60	60	60	60	60	60	60	60	60	60	60	60	60	59	59	57	54	58	52	50	56	49	46	53	45	43	50	42	41
				Exposed	60	60	60	60	60	60	60	60	60	60	60	60	60	60	58	60	58	55	60	55	53	60	53	50	56	48	46	52	44	42	48	41	39	45	38	37	42	36	35	40	34	33
		4:12	18.4	Non-Exposed	64	64	64	64	64	64	64	64	64	64	64	64	64	64	64	64	64	64	64	64	64	64	64	64	64	62	59	62	57	54	60	52	50	56	48	46	53	45	43	50	42	41
				Exposed	64	64	64	64	64	64	64	64	64	64	64	61	64	61	58	64	58	55	63	55	52	60	53	50	56	48	46	51	44	42	48	41	39	45	38	37	42	36	35	40	34	33
		5:12	22.6	Non-Exposed	64	64		64	64		64	64		64	64		64	64		64	64		64	64		64	64		64	64		63	63		62	58		60	54		59	50		58	47	
				Exposed	64	64		64	64		64	64		64	64		64	64		64	64		64	62		64	59		64	54		62	49		57	45		53	42		49	40		46	38	
		6:12	26.6	Non-Exposed	65	65		65	65		65	65		65	65		65	65		65	65		65	65		65	65		65	65		64	63		63	58		61	54		60	50		58	47	
				Exposed	65	65		65	65		65	65		65	65		65	65		65	65		65	61		65	59		65	53		61	49		57	45		53	42		49	40		46	38	
20		7:12	30.3	Non-Exposed	66	66	66	66	66	66	66	66	66	66	66	66	66	66	66	66	66	66	66	66	66	66	66	65	66	60	58	65	55	53	64	51	48	62	47	44	60	43	41	56	41	38
				Exposed	66	66	66	66	66	66	66	66	66	66	63	62	66	60	58	66	56	54	66	53	51	66	51	48	64	46	44	59	42	40	54	39	37	50	36	34	47	34	32	44	32	0
		8:12	33.7	Non-Exposed	68	68	68	68	68	68	68	68	68	68	68	68	68	68	68	68	68	68	68	68	68	68	66	65	68	60	58	67	55	53	65	50	48	64	47	44	60	43	41	56	41	38
				Exposed	68	68	68	68	68	68	68	67	66	68	63	62	68	59	58	68	56	54	68	53	51	68	51	48	64	46	43	58	42	40	54	39	37	50	36	34	47	34	32	44	32	0
		9:12	36.9	Non-Exposed	70	70	70	70	70	70	70	70	70	70	70	70	70	70	70	70	70	70	70	69	69	70	66	65	70	60	58	68	55	53	67	50	48	64	47	44	60	43	41	56	40	38
				Exposed	70	70	70	70	70	70	70	67	66	70	63	61	70	59	58	70	56	54	70	53	51	69	51	48	63	46	43	58	42	40	54	39	37	50	36	34	47	34	32	44	32	0
		10:12	39.8	Non-Exposed	71	71	71	71	71	71	71	71	71	71	71	71	71	71	71	71	71	71	71	69	68	71	66	64	71	60	58	70	55	52	69	50	48	64	46	44	60	43	41	56	40	38
				Exposed	71	71	71	71	71	70	71	67	66	71	63	61	71	59	57	71	56	54	71	53	51	69	51	48	63	46	43	58	42	40	54	39	37	50	36	34	47	34	32	44	32	0
		11:12	42.5	Non-Exposed	73	73	73	73	73	73	73	73	73	73	73	73	73	73	73	73	73	72	73	69	68	73	65	64	73	59	58	72	54	52	68	50	48	64	46	44	59	43	41	56	40	38
				Exposed	73	73	73	73	71	70	73	66	65	73	62	61	73	59	57	73	56	54	72	53	51	69	50	48	63	46	43	58	42	40	54	39	37	50	36	34	46	34	32	44	32	0
		12:12	45	Non-Exposed	75	75	75	75	75	75	75	75	75	75	75	75	75	75	75	75	72	72	75	69	68	75	65	64	75	59	58	74	54	52	68	50	48	63	46	44	59	43	41	56	40	38
				Exposed	75	75	75	75	70	70	75	66	65	75	62	61	75	59	57	75	56	54	72	53	51	69	50	48	63	46	43	58	42	40	54	39	36	50	36	34	46	34	32	43	32	0
	D	2:12	9.5	Non-Exposed	62	62	62	62	62	62	62	62	62	62	62	62	62	62	62	62	62	62	62	62	61	62	61	58	61	56	53	59	51	49	55	47	45	51	44	42	48	41	39	45	39	37
				Exposed	62	62	62	62	62	62	62	62	59	62	59	56	62	55	53	61	53	50	58	50	48	55	48	45	51	43	41	47	40	39	44	38	36	41	35	34	39	33	0	37	0	0
		3:12	14.0	Non-Exposed	60	60	60	60	60	60	60	60	60	60	60	60	60	60	60	60	60	60	60	60	60	60	60	58	59	56	53	57	51	49	55	47	45	51	44	42	48	41	39	45	39	37
				Exposed	60	60	60	60	60	60	60	60	59	60	58	56	60	55	53	60	52	50	58	50	47	55	47	45	51	43	41	47	40	39	44	38	36	41	35	34	39	33	0	37	0	0
		4:12	18.4	Non-Exposed	64	64	64	64	64	64	64	64	64	64	64	64	64	64	64	64	64	64	64	64	61	63	61	58	62	55	53	59	51	49	55	47	45	51	44	42	48	41	39	45	39	37
				Exposed	64	64	64	64	64	62	64	62	59	64	58	55	63	55	52	60	52	50	57	50	47	55	47	45	51	43	41	47	40	38	44	38	36	41	35	34	39	33	0	36	0	0
		5:12	22.6	Non-Exposed	64	64		64	64		64	64		64	64		64	64		64	64		64	64		64	64		63	62		61	57		60	53		58	49		57	46		53	43	
				Exposed	64	64		64	64		64	64		64	64		64	62		64	58		64	56		64	53		60	48		55	44		51	41		47	39		44	36		41	35	
		6:12	26.6	Non-Exposed	65	65		65	65		65	65		65	65		65	65		65	65		65	65		65	65		64	62		62	57		61	52		59	49		57	45		53	43	
				Exposed	65	65		65	65		65	65		65	65		65	61		65	58		65	55		65	53		60	48		55	44		51	41		47	39		44	36		41	34	
		7:12	30.3	Non-Exposed	66	66	66	66	66	66	66	66	66	66	66	66	66	66	66	66	66	65	66	63	61	66	59	58	65	54	52	63	49	47	62	45	43	58	42	39	54	39	37	51	37	34
				Exposed	66	66	66	66	64	63	66	60	58	66	57	55	66	53	51	66	51	48	66	48	45	63	46	43	57	41	39	53	38	36	49	35	33	45	33	0	42	0	0	40	0	0
		8:12	33.7	Non-Exposed	68	68	68	68	68	68	68	68	68	68	68	68	68	68	68	68	66	65	68	62	61	68	59	57	66	54	52	65	49	47	62	45	43	58	42	39	54	39	37	51	37	34
				Exposed	68	68	68	68	64	63	68	60	58	68	56	54	68	53	51	68	50	48	66	48	45	63	45	43	57	41	39	53	38	36	49	35	33	45	33	0	42	0	0	40	0	0
		9:12	36.9	Non-Exposed	70	70	70	70	70	70	70	70	70	70	70	70	70	69	69	70	65	64	70	62	61	70	59	57	68	54	51	66	49	47	62	45	43	58	42	39	54	39	37	50	37	34
				Exposed	70	68	67	70	64	62	70	60	58	70	56	54	70	53	51	69	50	48	66	48	45	63	45	43	57	41	39	53	38	36	49	35	33	45	33	0	42	0	0	40	0	0
		10:12	39.8	Non-Exposed	71	71	71	71	71	71	71	71	71	71	71	71	71	69	68	71	65	64	71	62	60	71	59	57	70	53	51	67	49	46	62	45	42	58	42	39	54	39	37	50	37	34
				Exposed	71	68	67	71	64	62	71	60	58	71	56	54	71	53	51	69	50	48	65	48	45	62	45	43	57	41	39	52	38	36	48	35	33	45	33	0	42	0	0	40	0	0
		11:12	42.5	Non-Exposed	73	73	73	73	73	73	73	73	73	73	73	73	73	69	68	73	65	64	73	62	60	73	59	57	72	53	51	67	49	46	62	45	42	57	42	39	54	39	37	50	37	34
				Exposed	73	68	67	73	63	62	73	60	58	73	56	54	72	53	51	69	50	48	65	48	45	62	45	43	57	41	39	52	38	36	48	35	33	45	33	0	42	0	0	40	0	0
		12:12	45	Non-Exposed	75	75	75	75	75	75	75	75	75	75	73	72	75	69	68	75	65	64	75	62	60	75	59	57	72	53	51	67	49	46	62	45	42	57	42	39	54	39	37	50	37	34
				Exposed	75	68	67	75	63	62	75	59	58	75	56	54	72	53	51	68	50	48	65	48	45	62	45	43	57	41	39	52	38	36	48	35	33	45	33	0	42	0	0	40	0	0

Tamarack 2.3 Rail – Hip Flush-Mount on 30 Foot Maximum Mean Roof Height – Portrait – Panel Length = 68 Inches or Less

Ground Snow Load	Exposure Category	Roof Pitch	Roof Angle	Wind Speed (mph)	95			100			105			110			115			120			125			130			140			150			160			170			180			190		
				Roof Area	1	2	3	1	2	3	1	2	3	1	2	3	1	2	3	1	2	3	1	2	3	1	2	3	1	2	3	1	2	3	1	2	3	1	2	3	1	2	3	1	2	3
25	B	2:12	9.5	Non-Exposed	61	61	61	61	61	61	61	61	61	61	61	61	61	61	61	61	61	61	61	61	61	61	61	61	61	61	61	61	61	61	61	61	61	61	60	57	60	56	53	59	52	50
				Exposed	61	61	61	61	61	61	61	61	61	61	61	61	61	61	61	61	61	61	61	61	61	61	61	61	61	59	57	61	55	52	58	50	48	54	47	44	51	44	41	48	41	39
		3:12	14.0	Non-Exposed	59	59	59	59	59	59	59	59	59	59	59	59	59	59	59	59	59	59	59	59	59	59	59	59	59	59	59	59	59	59	59	59	59	59	59	57	58	56	53	57	52	50
				Exposed	59	59	59	59	59	59	59	59	59	59	59	59	59	59	59	59	59	59	59	59	59	59	59	59	59	59	56	59	54	52	58	50	48	54	47	44	51	43	41	48	41	39
		4:12	18.4	Non-Exposed	59	59	59	59	59	59	59	59	59	59	59	59	59	59	59	59	59	59	59	59	59	59	59	59	59	59	59	59	59	59	59	59	59	59	59	57	58	56	53	57	52	50
				Exposed	59	59	59	59	59	59	59	59	59	59	59	59	59	59	59	59	59	59	59	59	59	59	59	59	59	59	56	59	54	52	58	50	48	54	46	44	51	43	41	48	41	39
		5:12	22.6	Non-Exposed	60	60		60	60		60	60		60	60		60	60		60	60		60	60		60	60		60	60		60	60		60	60		59	59		58	58		57	57	
				Exposed	60	60		60	60		60	60		60	60		60	60		60	60		60	60		60	60		60	60		60	60		60	56		59	52		58	48		57	45	
		6:12	26.6	Non-Exposed	61	61		61	61		61	61		61	61		61	61		61	61		61	61		61	61		61	61		61	61		61	61		60	60		59	59		58	58	
				Exposed	61	61		61	61		61	61		61	61		61	61		61	61		61	61		61	61		61	61		61	60		61	56		60	52		59	48		56	45	
		7:12	30.3	Non-Exposed	62	62	62	62	62	62	62	62	62	62	62	62	62	62	62	62	62	62	62	62	62	62	62	62	62	62	62	62	62	62	62	62	62	62	58	56	61	54	52	60	50	48
				Exposed	62	62	62	62	62	62	62	62	62	62	62	62	62	62	62	62	62	62	62	62	62	62	62	62	62	58	56	62	53	50	62	48	46	62	45	42	58	42	39	54	39	37
		8:12	33.7	Non-Exposed	64	64	64	64	64	64	64	64	64	64	64	64	64	64	64	64	64	64	64	64	64	64	64	64	64	64	64	64	64	64	64	63	61	63	58	56	62	54	52	61	50	48
				Exposed	64	64	64	64	64	64	64	64	64	64	64	64	64	64	64	64	64	64	64	64	64	64	63	62	64	57	55	64	52	50	64	48	46	62	45	42	57	41	39	54	39	37
		9:12	36.9	Non-Exposed	66	66	66	66	66	66	66	66	66	66	66	66	66	66	66	66	66	66	66	66	66	66	66	66	66	66	66	66	66	66	66	63	61	65	58	56	64	54	52	63	50	48
				Exposed	66	66	66	66	66	66	66	66	66	66	66	66	66	66	66	66	66	66	66	66	65	66	63	62	66	57	55	66	52	50	66	48	46	61	45	42	57	41	39	54	39	36
		10:12	39.8	Non-Exposed	67	67	67	67	67	67	67	67	67	67	67	67	67	67	67	67	67	67	67	67	67	67	67	67	67	67	67	67	67	67	67	62	61	67	58	56	66	54	51	65	50	48
				Exposed	67	67	67	67	67	67	67	67	67	67	67	67	67	67	67	67	67	67	67	66	65	67	63	61	67	57	55	67	52	50	66	48	46	61	44	42	57	41	39	54	39	36
		11:12	42.5	Non-Exposed	69	69	69	69	69	69	69	69	69	69	69	69	69	69	69	69	69	69	69	69	69	69	69	69	69	69	69	69	68	67	69	62	61	69	58	56	68	53	51	67	50	48
				Exposed	69	69	69	69	69	69	69	69	69	69	69	69	69	69	69	69	69	69	69	66	65	69	63	61	69	57	55	69	52	50	66	48	45	61	44	42	57	41	39	53	39	36
		12:12	45	Non-Exposed	71	71	71	71	71	71	71	71	71	71	71	71	71	71	71	71	71	71	71	71	71	71	71	71	71	71	71	71	67	67	71	62	61	71	57	56	70	53	51	68	50	47
				Exposed	71	71	71	71	71	71	71	71	71	71	71	71	71	71	71	71	69	69	71	66	65	71	62	61	71	57	55	71	52	50	66	48	45	61	44	42	57	41	39	53	39	36
	C	2:12	9.5	Non-Exposed	61	61	61	61	61	61	61	61	61	61	61	61	61	61	61	61	61	61	61	61	61	61	61	61	61	61	59	60	57	54	59	52	50	57	49	46	53	45	43	50	42	41
				Exposed	61	61	61	61	61	61	61	61	61	61	61	61	61	61	59	61	58	56	61	55	53	61	53	50	56	48	46	52	44	42	48	41	39	45	39	37	42	36	35	40	34	33
		3:12	14.0	Non-Exposed	59	59	59	59	59	59	59	59	59	59	59	59	59	59	59	59	59	59	59	59	59	59	59	59	59	59	59	58	57	54	57	52	50	56	49	46	53	45	43	50	42	41
				Exposed	59	59	59	59	59	59	59	59	59	59	59	59	59	59	58	59	58	55	59	55	53	59	53	50	56	48	46	52	44	42	48	41	39	45	38	37	42	36	35	40	34	33
		4:12	18.4	Non-Exposed	59	59	59	59	59	59	59	59	59	59	59	59	59	59	59	59	59	59	59	59	59	59	59	59	59	59	59	58	57	54	57	52	50	56	48	46	53	45	43	50	42	41
				Exposed	59	59	59	59	59	59	59	59	59	59	59	59	59	59	58	59	58	55	59	55	52	59	53	50	56	48	46	51	44	42	48	41	39	45	38	37	42	36	35	40	34	33
		5:12	22.6	Non-Exposed	60	60		60	60		60	60		60	60		60	60		60	60		60	60		60	60		60	60		59	59		57	57		56	54		55	50		54	47	
				Exposed	60	60		60	60		60	60		60	60		60	60		60	60		60	60		60	59		60	54		59	49		57	45		53	42		49	40		46	38	
		6:12	26.6	Non-Exposed	61	61		61	61		61	61		61	61		61	61		61	61		61	61		61	61		61	61		60	60		59	58		57	54		56	50		55	47	
				Exposed	61	61		61	61		61	61		61	61		61	61		61	61		61	61		61	59		61	53		60	49		57	45		53	42		49	40		46	38	
25		7:12	30.3	Non-Exposed	62	62	62	62	62	62	62	62	62	62	62	62	62	62	62	62	62	62	62	62	62	62	62	62	62	60	58	61	55	53	60	51	48	59	47	44	57	43	41	56	41	38
				Exposed	62	62	62	62	62	62	62	62	62	62	62	62	62	60	58	62	56	54	62	53	51	62	51	48	62	46	44	59	42	40	54	39	37	50	36	34	47	34	32	44	32	0
		8:12	33.7	Non-Exposed	64	64	64	64	64	64	64	64	64	64	64	64	64	64	64	64	64	64	64	64	64	64	64	64	64	60	58	63	55	53	61	50	48	60	47	44	59	43	41	56	41	38
				Exposed	64	64	64	64	64	64	64	64	64	64	63	62	64	59	58	64	56	54	64	53	51	64	51	48	64	46	43	58	42	40	54	39	37	50	36	34	47	34	32	44	32	0
		9:12	36.9	Non-Exposed	66	66	66	66	66	66	66	66	66	66	66	66	66	66	66	66	66	66	66	66	66	66	66	65	66	60	58	64	55	53	63	50	48	62	47	44	60	43	41	56	40	38
				Exposed	66	66	66	66	66	66	66	66	66	66	63	61	66	59	58	66	56	54	66	53	51	66	51	48	63	46	43	58	42	40	54	39	37	50	36	34	47	34	32	44	32	0
		10:12	39.8	Non-Exposed	67	67	67	67	67	67	67	67	67	67	67	67	67	67	67	67	67	67	67	67	67	67	66	64	67	60	58	66	55	52	65	50	48	63	46	44	60	43	41	56	40	38
				Exposed	67	67	67	67	67	67	67	67	66	67	63	61	67	59	57	67	56	54	67	53	51	67	51	48	63	46	43	58	42	40	54	39	37	50	36	34	47	34	32	44	32	0
		11:12	42.5	Non-Exposed	69	69	69	69	69	69	69	69	69	69	69	69	69	69	69	69	69	69	69	69	68	69	65	64	69	59	58	68	54	52	67	50	48	64	46	44	59	43	41	56	40	38
				Exposed	69	69	69	69	69	69	69	66	65	69	62	61	69	59	57	69	56	54	69	53	51	69	50	48	63	46	43	58	42	40	54	39	37	50	36	34	46	34	32	44	32	0
		12:12	45	Non-Exposed	71	71	71	71	71	71	71	71	71	71	71	71	71	71	71	71	71	71	71	69	68	71	65	64	71	59	58	70	54	52	68	50	48	63	46	44	59	43	41	56	40	38
				Exposed	71	71	71	71	70	70	71	66	65	71	62	61	71	59	57	71	56	54	71	53	51	69	50	48	63	46	43	58	42	40	54	39	36	50	36	34	46	34	32	43	32	0
	D	2:12	9.5	Non-Exposed	61	61	61	61	61	61	61	61	61	61	61	61	61	61	61	61	61	61	61	61	61	61	61	58	60	56	53	58	51	49	55	47	45	51	44	42	48	41	39	45	39	37
				Exposed	61	61	61	61	61	61	61	61	59	61	59	56	61	55	53	61	53	50	58	50	48	55	48	45	51	43	41	47	40	39	44	38	36	41	35	34	39	33	0	37	0	0
		3:12	14.0	Non-Exposed	59	59	59	59	59	59	59	59	59	59	59	59	59	59	59	59	59	59	59	59	59	59	59	58	58	56	53	57	51	49	55	47	45	51	44	42	48	41	39	45	39	37
				Exposed	59	59	59	59	59	59	59	59	59	59	58	56	59	55	53	59	52	50	58	50	47	55	47	45	51	43	41	47	40	39	44	38	36	41	35	34	39	33	0	37	0	0
		4:12	18.4	Non-Exposed	59	59	59	59	59	59	59	59	59	59	59	59	59	59	59	59	59	59	59	59	59	59	59	58	58	55	53	56	51	49	55	47	45	51	44	42	48	41	39	45	39	37
				Exposed	59	59	59	59	59	59	59	59	59	59	58	55	59	55	52	59	52	50	57	50	47	55	47	45	51	43	41	47	40	38	44	38	36	41	35	34	39	33	0	36	0	0
		5:12	22.6	Non-Exposed	60	60		60	60		60	60		60	60		60	60		60	60		60	60		59	59		58	58		57	57		56	53		55	49		53	46		52	43	
				Exposed	60	60		60	60		60	60		60	60		60	60		60	58		60	56		59	53		58	48		55	44		51	41		47	39		44	36		41	35	
		6:12	26.6	Non-Exposed	61	61		61	61		61	61		61	61		61	61		61	61		61	61		61	61		59	59		58	57		57	52		56	49		54	45		53	43	
				Exposed	61	61		61	61		61	61		61	61		61	61		61	58		61	55		61	53		59	48		55	44		51	41		47	39		44	36		41	34	
		7:12	30.3	Non-Exposed	62	62	62	62	62	62	62	62	62	62	62	62	62	62	62	62	62	62	62	62	61	62	59	58	61	54	52	59	49	47	58	45	43	57	42	39	54	39	37	51	37	34
				Exposed	62	62	62	62	62	62	62	60	58	62	57	55	62	53	51	62	51	48	62	48	45	62	46	43	57	41	39	53	38	36	49	35	33	45	33	0	42	0	0	40	0	0
		8:12	33.7	Non-Exposed	64	64	64	64	64	64	64	64	64	64	64	64	64	64	64	64	64	64	64	62	61	64	59	57	62	54	52	61	49	47	60	45	43	58	42	39	54	39	37	51	37	34
				Exposed	64	64	64	64	64	63	64	60	58	64	56	54	64	53	51	64	50	48	64	48	45	63	45	43	57	41	39	53	38	36	49	35	33	45	33	0	42	0	0	40	0	0
		9:12	36.9	Non-Exposed	66	66	66	66	66	66	66	66	66	66	66	66	66	66	66	66	65	64	66	62	61	66	59	57	64	54	51	63	49	47	61	45	43	58	42	39	54	39	37	50	37	34
				Exposed	66	66	66	66	66	64	62	66	60	58	66	56	54	66	53	51	66	50	48	66	48	45	63	45	43	57	41	39	53	38	36	49	35	33	45	33	0	42	0	0	40	0	0
		10:12	39.8	Non-Exposed	67	67	67	67	67	67	67	67	67	67	67	67	67	67	67	67	65	64	67	62	60	67	59	57	66	53	51	64	49	46	62	45	42	58	42	39	54	39	37	50	37	34
				Exposed	67	67	67	67	64	62	67	60	58	67	56	54	67	53	51	67	50	48	65	48	45	62	45	43	57	41	39	52	38	36	48	35	33	45	33	0	42	0	0	40	0	0
		11:12	42.5	Non-Exposed	69	69	69	69	69	69	69	69	69	69	69	69	69	69	68	69	65	64	69	62	60	69	59	57	68	53	51	66	49	46	62	45	42	57	42	39	54	39	37	50	37	34
				Exposed	69	68	67	69	63	62	69	60	58	69	56	54	69	53	51	69	50	48	65	48	45	62	45	43	57	41	39	52	38	36	48	35	33	45	33	0	42	0	0	40	0	0
		12:12	45	Non-Exposed	71	71	71	71	71	71	71	71	71	71	71	71	71	69	68	71	65	64	71	62	60	71	59	57	70	53	51	67	49	46	62	45	42	57	42	39	54	39	37	50	37	34
				Exposed	71	68	67	71	63	62	71	59	58	71	56	54	71	53	51	68	50	48	65	48	45	62	45	43	57	41	39	52	38	36	48	35	33	45	33	0	42	0	0	40	0	0

Tamarack 2.3 Rail – Hip Flush-Mount on 30 Foot Maximum Mean Roof Height – Portrait – Panel Length = 68 Inches or Less

Ground Snow Load	Exposure Category	Roof Pitch	Roof Angle	Wind Speed (mph)	95			100			105			110			115			120			125			130			140			150			160			170			180			190		
				Roof Area	1	2	3	1	2	3	1	2	3	1	2	3	1	2	3	1	2	3	1	2	3	1	2	3	1	2	3	1	2	3	1	2	3	1	2	3	1	2	3	1	2	3
30	B	2:12	9.5	Non-Exposed	56	56	56	56	56	56	56	56	56	56	56	56	56	56	56	56	56	56	56	56	56	56	56	56	56	56	56	56	56	56	56	56	56	56	56	56	56	56	53	55	52	50
				Exposed	56	56	56	56	56	56	56	56	56	56	56	56	56	56	56	56	56	56	56	56	56	56	56	56	56	56	56	56	55	52	56	50	48	54	47	44	51	44	41	48	41	39
		3:12	14.0	Non-Exposed	54	54	54	54	54	54	54	54	54	54	54	54	54	54	54	54	54	54	54	54	54	54	54	54	54	54	54	54	54	54	54	54	54	54	54	54	54	54	53	53	52	50
				Exposed	54	54	54	54	54	54	54	54	54	54	54	54	54	54	54	54	54	54	54	54	54	54	54	54	54	54	54	54	54	52	54	50	48	54	47	44	51	43	41	48	41	39
		4:12	18.4	Non-Exposed	54	54	54	54	54	54	54	54	54	54	54	54	54	54	54	54	54	54	54	54	54	54	54	54	54	54	54	54	54	54	54	54	54	54	54	54	54	54	53	53	52	50
				Exposed	54	54	54	54	54	54	54	54	54	54	54	54	54	54	54	54	54	54	54	54	54	54	54	54	54	54	54	54	54	52	54	50	48	54	46	44	51	43	41	48	41	39
		5:12	22.6	Non-Exposed	55	55		55	55		55	55		55	55		55	55		55	55		55	55		55	55		55	55		55	55		55	55		55	55		55	55		54	54	
				Exposed	55	55		55	55		55	55		55	55		55	55		55	55		55	55		55	55		55	55		55	55		55	55		55	52		55	48		54	45	
		6:12	26.6	Non-Exposed	56	56		56	56		56	56		56	56		56	56		56	56		56	56		56	56		56	56		56	56		56	56		56	56		56	56		55	55	
				Exposed	56	56		56	56		56	56		56	56		56	56		56	56		56	56		56	56		56	56		56	56		56	56		56	52		56	48		55	45	
		7:12	30.3	Non-Exposed	58	58	58	58	58	58	58	58	58	58	58	58	58	58	58	58	58	58	58	58	58	58	58	58	58	58	58	58	58	56	57	54	52	57	50	48						
				Exposed	58	58	58	58	58	58	58	58	58	58	58	58	58	58	58	58	58	58	58	58	58	58	58	58	58	58	56	58	53	50	58	48	46	58	45	42	57	42	39	54	39	37
		8:12	33.7	Non-Exposed	60	60	60	60	60	60	60	60	60	60	60	60	60	60	60	60	60	60	60	60	60	60	60	60	60	60	60	60	60	56	59	54	52	58	50	48						
				Exposed	60	60	60	60	60	60	60	60	60	60	60	60	60	60	60	60	60	60	60	60	60	60	60	60	60	57	55	60	52	50	60	48	46	60	45	42	57	41	39	54	39	37
		9:12	36.9	Non-Exposed	62	62	62	62	62	62	62	62	62	62	62	62	62	62	62	62	62	62	62	62	62	62	62	62	62	62	62	62	62	62	62	62	61	62	58	56	61	54	52	60	50	48
				Exposed	62	62	62	62	62	62	62	62	62	62	62	62	62	62	62	62	62	62	62	62	62	62	62	62	62	57	55	62	52	50	62	48	46	61	45	42	57	41	39	54	39	36
		10:12	39.8	Non-Exposed	64	64	64	64	64	64	64	64	64	64	64	64	64	64	64	64	64	64	64	64	64	64	64	64	64	64	64	64	64	64	64	62	61	64	58	56	63	54	51	62	50	48
				Exposed	64	64	64	64	64	64	64	64	64	64	64	64	64	64	64	64	64	64	64	64	64	64	63	61	64	57	55	64	52	50	64	48	46	61	44	42	57	41	39	54	39	36
		11:12	42.5	Non-Exposed	66	66	66	66	66	66	66	66	66	66	66	66	66	66	66	66	66	66	66	66	66	66	66	66	66	66	66	66	66	66	66	62	61	66	58	56	65	53	51	64	50	48
				Exposed	66	66	66	66	66	66	66	66	66	66	66	66	66	66	66	66	66	66	66	66	65	66	63	61	66	57	55	66	52	50	66	48	45	61	44	42	57	41	39	53	39	36
		12:12	45	Non-Exposed	68	68	68	68	68	68	68	68	68	68	68	68	68	68	68	68	68	68	68	68	68	68	68	68	68	68	68	68	67	67	68	62	61	68	57	56	67	53	51	66	50	47
				Exposed	68	68	68	68	68	68	68	68	68	68	68	68	68	68	68	68	68	68	68	66	65	68	62	61	68	57	55	68	52	50	66	48	45	61	44	42	57	41	39	53	39	36
	C	2:12	9.5	Non-Exposed	56	56	56	56	56	56	56	56	56	56	56	56	56	56	56	56	56	56	56	56	56	56	56	56	56	56	56	55	52	50	54	49	46	53	45	43	50	42	41			
				Exposed	56	56	56	56	56	56	56	56	56	56	56	56	56	56	56	56	56	56	56	55	53	56	53	50	56	48	46	52	44	42	48	41	39	45	39	37	42	36	35	40	34	33
		3:12	14.0	Non-Exposed	54	54	54	54	54	54	54	54	54	54	54	54	54	54	54	54	54	54	54	54	54	54	54	54	54	54	54	54	54	54	53	52	50	53	49	46	52	45	43	50	42	41
				Exposed	54	54	54	54	54	54	54	54	54	54	54	54	54	54	54	54	54	54	54	54	53	54	53	50	54	48	46	52	44	42	48	41	39	45	38	37	42	36	35	40	34	33
		4:12	18.4	Non-Exposed	54	54	54	54	54	54	54	54	54	54	54	54	54	54	54	54	54	54	54	54	54	54	54	54	54	54	54	54	54	54	53	52	50	53	48	46	52	45	43	50	42	41
				Exposed	54	54	54	54	54	54	54	54	54	54	54	54	54	54	54	54	54	54	54	54	52	54	53	50	54	48	46	51	44	42	48	41	39	45	38	37	42	36	35	40	34	33
		5:12	22.6	Non-Exposed	55	55		55	55		55	55		55	55		55	55		55	55		55	55		55	55		55	55		55	55		54	54		53	53		52	50		51	47	
				Exposed	55	55		55	55		55	55		55	55		55	55		55	55		55	55		55	55		55	54		55	49		54	45		53	42		49	40		46	38	
		6:12	26.6	Non-Exposed	56	56		56	56		56	56		56	56		56	56		56	56		56	56		56	56		56	56		56	56		55	55		54	54		53	50		52	47	
				Exposed	56	56		56	56		56	56		56	56		56	56		56	56		56	56		56	56		56	53		56	49		55	45		53	42		49	40		46	38	
		7:12	30.3	Non-Exposed	58	58	58	58	58	58	58	58	58	58	58	58	58	58	58	58	58	58	58	58	58	58	58	58	58	58	58	58	55	53	57	51	48	55	47	44	54	43	41	53	41	38
				Exposed	58	58	58	58	58	58	58	58	58	58	58	58	58	58	58	58	56	54	58	53	51	58	51	48	58	46	44	58	42	40	54	39	37	50	36	34	47	34	32	44	32	0
		8:12	33.7	Non-Exposed	60	60	60	60	60	60	60	60	60	60	60	60	60	60	60	60	60	60	60	60	60	60	60	60	60	60	58	59	55	53	58	50	48	57	47	44	56	43	41	55	41	38
				Exposed	60	60	60	60	60	60	60	60	60	60	60	60	60	59	58	60	56	54	60	53	51	60	51	48	60	46	43	58	42	40	54	39	37	50	36	34	47	34	32	44	32	0
		9:12	36.9	Non-Exposed	62	62	62	62	62	62	62	62	62	62	62	62	62	62	62	62	62	62	62	62	62	62	62	62	62	60	58	61	55	53	60	50	48	59	47	44	57	43	41	56	40	38
				Exposed	62	62	62	62	62	62	62	62	62	62	62	61	62	59	58	62	56	54	62	53	51	62	51	48	62	46	43	58	42	40	54	39	37	50	36	34	47	34	32	44	32	0
		10:12	39.8	Non-Exposed	64	64	64	64	64	64	64	64	64	64	64	64	64	64	64	64	64	64	64	64	64	64	64	64	64	60	58	63	55	52	62	50	48	60	46	44	59	43	41	56	40	38
				Exposed	64	64	64	64	64	64	64	64	64	64	63	61	64	59	57	64	56	54	64	53	51	64	51	48	63	46	43	58	42	40	54	39	37	50	36	34	47	34	32	44	32	0
		11:12	42.5	Non-Exposed	66	66	66	66	66	66	66	66	66	66	66	66	66	66	66	66	66	66	66	66	66	66	65	64	66	59	58	65	54	52	64	50	48	62	46	44	59	43	41	56	40	38
				Exposed	66	66	66	66	66	66	66	66	65	66	62	61	66	59	57	66	56	54	66	53	51	66	50	48	63	46	43	58	42	40	54	39	37	50	36	34	46	34	32	44	32	0
		12:12	45	Non-Exposed	68	68	68	68	68	68	68	68	68	68	68	68	68	68	68	68	68	68	68	68	68	68	65	64	68	59	58	67	54	52	66	50	48	63	46	44	59	43	41	56	40	38
				Exposed	68	68	68	68	68	68	68	66	65	68	62	61	68	59	57	68	56	54	68	53	51	68	50	48	63	46	43	58	42	40	54	39	36	50	36	34	46	34	32	43	32	0
	D	2:12	9.5	Non-Exposed	56	56	56	56	56	56	56	56	56	56	56	56	56	56	56	56	56	56	56	56	56	56	56	56	56	56	53	55	51	49	54	47	45	51	44	42	48	41	39	45	39	37
				Exposed	56	56	56	56	56	56	56	56	56	56	56	56	56	55	53	56	53	50	56	50	48	55	48	45	51	43	41	47	40	39	44	38	36	41	35	34	39	33	0	37	0	0
		3:12	14.0	Non-Exposed	54	54	54	54	54	54	54	54	54	54	54	54	54	54	54	54	54	54	54	54	54	54	54	54	54	54	53	53	51	49	52	47	45	51	44	42	48	41	39	45	39	37
				Exposed	54	54	54	54	54	54	54	54	54	54	54	54	54	54	53	54	52	50	54	50	47	54	47	45	51	43	41	47	40	39	44	38	36	41	35	34	39	33	0	37	0	0
		4:12	18.4	Non-Exposed	54	54	54	54	54	54	54	54	54	54	54	54	54	54	54	54	54	54	54	54	54	54	54	54	54	54	53	53	51	49	52	47	45	51	44	42	48	41	39	45	39	37
				Exposed	54	54	54	54	54	54	54	54	54	54	54	54	54	54	52	54	52	50	54	50	47	54	47	45	51	43	41	47	40	38	44	38	36	41	35	34	39	33	0	36	0	0
		5:12	22.6	Non-Exposed	55	55		55	55		55	55		55	55		55	55		55	55		55	55		55	55		55	55		54	54		53	53		52	49		51	46		50	43	
				Exposed	55	55		55	55		55	55		55	55		55	55		55	55		55	55		55	53		55	48		54	44		51	41		47	39		44	36		41	35	
		6:12	26.6	Non-Exposed	56	56		56	56		56	56		56	56		56	56		56	56		56	56		56	56		56	56		55	55		54	52		53	49		52	45		50	43	
				Exposed	56	56		56	56		56	56		56	56		56	56		56	56		56	55		56	53		56	48		55	44		51	41		47	39		44	36		41	34	
		7:12	30.3	Non-Exposed	58	58	58	58	58	58	58	58	58	58	58	58	58	58	58	58	58	58	58	58	58	58	58	58	57	54	52	56	49	47	55	45	43	54	42	39	53	39	37	51	37	34
				Exposed	58	58	58	58	58	58	58	58	58	58	57	55	58	53	51	58	51	48	58	48	45	58	46	43	57	41	39	53	38	36	49	35	33	45	33	0	42	0	0	40	0	0
		8:12	33.7	Non-Exposed	60	60	60	60	60	60	60	60	60	60	60	60	60	60	60	60	60	60	60	60	60	60	59	57	59	54	52	58	49	47	57	45	43	55	42	39	54	39	37	51	37	34
				Exposed	60	60	60	60	60	60	60	58	60	56	54	60	53	51	60	50	48	60	48	45	60	45	43	57	41	39	53	38	36	49	35	33	45	33	0	42	0	0	40	0	0
		9:12	36.9	Non-Exposed	62	62	62	62	62	62	62	62	62	62	62	62	62	62	62	62	62	62	62	62	61	62	59	57	61	54	51	59	49	47	58	45	43	57	42	39	54	39	37	50	37	34
				Exposed	62	62	62	62	62	62	62	60	58	62	56	54	62	53	51	62	50	48	62	48	45	62	45	43	57	41	39	53	38	36	49	35	33	45	33	0	42	0	0	40	0	0
		10:12	39.8	Non-Exposed	64	64	64	64	64	64	64	64	64	64	64	64	64	64	64	64	64	64	64	62	60	64	59	57	63	53	51	61	49	46	60	45	42	58	42	39	54	39	37	50	37	34
				Exposed	64	64	64	64	64	62	64	60	58	64	56	54	64	53	51	64	50	48	64	48	45	62	45	43	57	41	39	52	38	36	48	35	33	45	33	0	42	0	0	40	0	0
		11:12	42.5	Non-Exposed	66	66	66	66	66	66	66	66	66	66	66	66	66	66	66	66	65	64	66	62	60	66	59	57	65	53	51	63	49	46	62	45	42	57	42	39	54	39	37	50	37	34
				Exposed	66	66	66	66	63	62	66	60	58	66	56	54	66	53	51	66	50	48	65	48	45	62	45	43	57	41	39	52	38	36	48	35	33	45	33	0	42	0	0	40	0	0
		12:12	45	Non-Exposed	68	68	68	68	68	68	68	68	68	68	68	68	68	68	68	68	65	64	68	62	60	68	59	57	67	53	51	65	49	46	62	45	42	57	42	39	54	39	37	50	37	34
				Exposed	68	68	67	68	63	62	68	59	58	68	56	54	68	53	51	68	50	48	65	48	45	62	45	43	57	41	39	52	38	36	48	35	33	45	33	0	42	0	0	40	0	0

Tamarack 2.3 Rail – Hip Flush-Mount on 30 Foot Maximum Mean Roof Height – Portrait – Panel Length = 68 Inches or Less

Ground Snow Load	Exposure Category	Roof Pitch	Roof Angle	Wind Speed (mph)	95			100			105			110			115			120			125			130			140			150			160			170			180			190		
				Roof Area	1	2	3	1	2	3	1	2	3	1	2	3	1	2	3	1	2	3	1	2	3	1	2	3	1	2	3	1	2	3	1	2	3	1	2	3	1	2	3	1	2	3
35	B	2:12	9.5	Non-Exposed	52	52	52	52	52	52	52	52	52	52	52	52	52	52	52	52	52	52	52	52	52	52	52	52	52	52	52	52	52	52	52	52	52	52	52	52	52	52	52	52	52	50
				Exposed	52	52	52	52	52	52	52	52	52	52	52	52	52	52	52	52	52	52	52	52	52	52	52	52	52	52	52	52	52	52	52	50	48	52	47	44	51	44	41	48	41	39
		3:12	14.0	Non-Exposed	50	50	50	50	50	50	50	50	50	50	50	50	50	50	50	50	50	50	50	50	50	50	50	50	50	50	50	50	50	50	50	50	50	50	50	50	50	50	50	50	50	50
				Exposed	50	50	50	50	50	50	50	50	50	50	50	50	50	50	50	50	50	50	50	50	50	50	50	50	50	50	50	50	50	50	50	50	48	50	47	44	50	43	41	48	41	39
		4:12	18.4	Non-Exposed	50	50	50	50	50	50	50	50	50	50	50	50	50	50	50	50	50	50	50	50	50	50	50	50	50	50	50	50	50	50	50	50	50	50	50	50	50	50	50	50	50	50
				Exposed	50	50	50	50	50	50	50	50	50	50	50	50	50	50	50	50	50	50	50	50	50	50	50	50	50	50	50	50	50	50	50	50	48	50	46	44	50	43	41	48	41	39
		5:12	22.6	Non-Exposed	51	51		51	51		51	51		51	51		51	51		51	51		51	51		51	51		51	51		51	51		51	51		51	51		51	51		51	51	
				Exposed	51	51		51	51		51	51		51	51		51	51		51	51		51	51		51	51		51	51		51	51		51	51		51	51		51	48		51	45	
		6:12	26.6	Non-Exposed	53	53		53	53		53	53		53	53		53	53		53	53		53	53		53	53		53	53		53	53		53	53		53	53		53	53		52	52	
				Exposed	53	53		53	53		53	53		53	53		53	53		53	53		53	53		53	53		53	53		53	52		53	48		52	45							
		7:12	30.3	Non-Exposed	54	54	54	54	54	54	54	54	54	54	54	54	54	54	54	54	54	54	54	54	54	54	54	54	54	54	54	54	54	54	54	54	54	54	54	54	54	54	52	54	50	48
				Exposed	54	54	54	54	54	54	54	54	54	54	54	54	54	54	54	54	54	54	54	54	54	54	54	54	54	54	54	54	53	50	54	48	46	54	45	42	54	42	39	54	39	37
		8:12	33.7	Non-Exposed	57	57	57	57	57	57	57	57	57	57	57	57	57	57	57	57	57	57	57	57	57	57	57	57	57	57	57	57	57	57	57	57	57	57	57	56	56	54	52	55	50	48
				Exposed	57	57	57	57	57	57	57	57	57	57	57	57	57	57	57	57	57	57	57	57	57	57	57	57	57	57	55	57	52	50	57	48	46	57	45	42	56	41	39	54	39	37
		9:12	36.9	Non-Exposed	59	59	59	59	59	59	59	59	59	59	59	59	59	59	59	59	59	59	59	59	59	59	59	59	59	59	59	59	59	59	59	59	59	59	58	56	58	54	52	57	50	48
				Exposed	59	59	59	59	59	59	59	59	59	59	59	59	59	59	59	59	59	59	59	59	59	59	59	59	59	57	55	59	52	50	59	48	46	59	45	42	57	41	39	54	39	36
		10:12	39.8	Non-Exposed	61	61	61	61	61	61	61	61	61	61	61	61	61	61	61	61	61	61	61	61	61	61	61	61	61	61	61	61	61	61	61	61	61	61	58	56	60	54	51	59	50	48
				Exposed	61	61	61	61	61	61	61	61	61	61	61	61	61	61	61	61	61	61	61	61	61	61	61	61	61	57	55	61	52	50	61	48	46	61	44	42	57	41	39	54	39	36
		11:12	42.5	Non-Exposed	63	63	63	63	63	63	63	63	63	63	63	63	63	63	63	63	63	63	63	63	63	63	63	63	63	63	63	63	63	63	63	62	61	63	58	56	62	53	51	61	50	48
				Exposed	63	63	63	63	63	63	63	63	63	63	63	63	63	63	63	63	63	63	63	63	63	63	63	61	63	57	55	63	52	50	63	48	45	61	44	42	57	41	39	53	39	36
		12:12	45	Non-Exposed	66	66	66	66	66	66	66	66	66	66	66	66	66	66	66	66	66	66	66	66	66	66	66	66	66	66	66	66	66	66	66	62	61	65	57	56	64	53	51	63	50	47
				Exposed	66	66	66	66	66	66	66	66	66	66	66	66	66	66	66	66	66	66	66	66	65	66	62	61	66	57	55	66	52	50	66	48	45	61	44	42	57	41	39	53	39	36
	C	2:12	9.5	Non-Exposed	52	52	52	52	52	52	52	52	52	52	52	52	52	52	52	52	52	52	52	52	52	52	52	52	52	52	52	52	52	52	52	52	50	51	49	46	51	45	43	50	42	41
				Exposed	52	52	52	52	52	52	52	52	52	52	52	52	52	52	52	52	52	52	52	52	52	52	52	50	52	48	46	52	44	42	48	41	39	45	39	37	42	36	35	40	34	33
		3:12	14.0	Non-Exposed	50	50	50	50	50	50	50	50	50	50	50	50	50	50	50	50	50	50	50	50	50	50	50	50	50	50	50	50	50	50	50	50	50	50	49	46	49	45	43	48	42	41
				Exposed	50	50	50	50	50	50	50	50	50	50	50	50	50	50	50	50	50	50	50	50	50	50	50	50	50	48	46	50	44	42	48	41	39	45	38	37	42	36	35	40	34	33
		4:12	18.4	Non-Exposed	50	50	50	50	50	50	50	50	50	50	50	50	50	50	50	50	50	50	50	50	50	50	50	50	50	50	50	50	50	50	50	50	50	50	48	46	49	45	43	48	42	41
				Exposed	50	50	50	50	50	50	50	50	50	50	50	50	50	50	50	50	50	50	50	50	50	50	50	50	50	48	46	50	44	42	48	41	39	45	38	37	42	36	35	40	34	33
		5:12	22.6	Non-Exposed	51	51		51	51		51	51		51	51		51	51		51	51		51	51		51	51		51	51		51	51		51	51		50	50		50	50		49	47	
				Exposed	51	51		51	51		51	51		51	51		51	51		51	51		51	51		51	51		51	51		51	49		51	45		50	42		49	40		46	38	
		6:12	26.6	Non-Exposed	53	53		53	53		53	53		53	53		53	53		53	53		53	53		53	53		53	53		53	53		52	52		51	51		51	50		50	47	
				Exposed	53	53		53	53		53	53		53	53		53	53		53	53		53	53		53	53		53	53		53	49		52	45		51	42		49	40		46	38	
35		7:12	30.3	Non-Exposed	54	54	54	54	54	54	54	54	54	54	54	54	54	54	54	54	54	54	54	54	54	54	54	54	54	54	54	54	54	53	54	51	48	53	47	44	52	43	41	51	41	38
				Exposed	54	54	54	54	54	54	54	54	54	54	54	54	54	54	54	54	54	54	54	53	51	54	51	48	54	46	44	54	42	40	54	39	37	50	36	34	47	34	32	44	32	0
		8:12	33.7	Non-Exposed	57	57	57	57	57	57	57	57	57	57	57	57	57	57	57	57	57	57	57	57	57	57	57	57	57	57	57	56	55	53	55	50	48	54	47	44	53	43	41	52	41	38
				Exposed	57	57	57	57	57	57	57	57	57	57	57	57	57	57	57	57	56	54	57	53	51	57	51	48	57	46	43	56	42	40	54	39	37	50	36	34	47	34	32	44	32	0
		9:12	36.9	Non-Exposed	59	59	59	59	59	59	59	59	59	59	59	59	59	59	59	59	59	59	59	59	59	59	59	59	59	59	58	58	55	53	57	50	48	56	47	44	55	43	41	54	40	38
				Exposed	59	59	59	59	59	59	59	59	59	59	59	59	59	59	58	59	56	54	59	53	51	59	51	48	59	46	43	58	42	40	54	39	37	50	36	34	47	34	32	44	32	0
		10:12	39.8	Non-Exposed	61	61	61	61	61	61	61	61	61	61	61	61	61	61	61	61	61	61	61	61	61	61	61	61	61	60	58	60	55	52	59	50	48	58	46	44	57	43	41	55	40	38
				Exposed	61	61	61	61	61	61	61	61	61	61	61	61	61	59	57	61	56	54	61	53	51	61	51	48	61	46	43	58	42	40	54	39	37	50	36	34	47	34	32	44	32	0
		11:12	42.5	Non-Exposed	63	63	63	63	63	63	63	63	63	63	63	63	63	63	63	63	63	63	63	63	63	63	63	63	63	59	58	62	54	52	61	50	48	60	46	44	58	43	41	56	40	38
				Exposed	63	63	63	63	63	63	63	63	63	63	62	61	63	59	57	63	56	54	63	53	51	63	50	48	63	46	43	58	42	40	54	39	37	50	36	34	46	34	32	44	32	0
		12:12	45	Non-Exposed	66	66	66	66	66	66	66	66	66	66	66	66	66	66	66	66	66	66	66	66	66	66	65	64	66	59	58	64	54	52	63	50	48	62	46	44	59	43	41	56	40	38
				Exposed	66	66	66	66	66	66	66	66	65	66	62	61	66	59	57	66	56	54	66	53	51	66	50	48	63	46	43	58	42	40	54	39	36	50	36	34	46	34	32	43	32	0
	D	2:12	9.5	Non-Exposed	52	52	52	52	52	52	52	52	52	52	52	52	52	52	52	52	52	52	52	52	52	52	52	52	52	52	52	52	51	49	51	47	45	50	44	42	48	41	39	45	39	37
				Exposed	52	52	52	52	52	52	52	52	52	52	52	52	52	52	52	52	52	50	52	50	48	52	48	45	51	43	41	47	40	39	44	38	36	41	35	34	39	33	0	37	0	0
		3:12	14.0	Non-Exposed	50	50	50	50	50	50	50	50	50	50	50	50	50	50	50	50	50	50	50	50	50	50	50	50	50	50	50	50	50	49	49	47	45	49	44	42	48	41	39	45	39	37
				Exposed	50	50	50	50	50	50	50	50	50	50	50	50	50	50	50	50	50	50	50	50	47	50	47	45	50	43	41	47	40	39	44	38	36	41	35	34	39	33	0	37	0	0
		4:12	18.4	Non-Exposed	50	50	50	50	50	50	50	50	50	50	50	50	50	50	50	50	50	50	50	50	50	50	50	50	50	50	50	50	50	49	49	47	45	49	44	42	48	41	39	45	39	37
				Exposed	50	50	50	50	50	50	50	50	50	50	50	50	50	50	50	50	50	50	50	50	47	50	47	45	50	43	41	47	40	38	44	38	36	41	35	34	39	33	0	36	0	0
		5:12	22.6	Non-Exposed	51	51		51	51		51	51		51	51		51	51		51	51		51	51		51	51		51	51		51	51		50	50		49	49		48	46		47	43	
				Exposed	51	51		51	51		51	51		51	51		51	51		51	51		51	51		51	51		51	48		51	44		50	41		47	39		44	36		41	35	
		6:12	26.6	Non-Exposed	53	53		53	53		53	53		53	53		53	53		53	53		53	53		53	53		53	53		52	52		51	51		50	49		49	45		48	43	
				Exposed	53	53		53	53		53	53		53	53		53	53		53	53		53	53		53	53		53	48		52	44		51	41		47	39		44	36		41	34	
		7:12	30.3	Non-Exposed	54	54	54	54	54	54	54	54	54	54	54	54	54	54	54	54	54	54	54	54	54	54	54	54	54	54	52	53	49	47	52	45	43	51	42	39	50	39	37	49	37	34
				Exposed	54	54	54	54	54	54	54	54	54	54	54	54	54	53	51	54	51	48	54	48	45	54	46	43	54	41	39	53	38	36	49	35	33	45	33	0	42	0	0	40	0	0
		8:12	33.7	Non-Exposed	57	57	57	57	57	57	57	57	57	57	57	57	57	57	57	57	57	57	57	57	57	57	57	57	56	54	52	55	49	47	54	45	43	53	42	39	52	39	37	51	37	34
				Exposed	57	57	57	57	57	57	57	57	57	57	56	54	57	53	51	57	50	48	57	48	45	57	45	43	56	41	39	53	38	36	49	35	33	45	33	0	42	0	0	40	0	0
		9:12	36.9	Non-Exposed	59	59	59	59	59	59	59	59	59	59	59	59	59	59	59	59	59	59	59	59	59	59	59	57	58	54	51	57	49	47	56	45	43	54	42	39	53	39	37	50	37	34
				Exposed	59	59	59	59	59	59	59	59	58	59	56	54	59	53	51	59	50	48	59	48	45	59	45	43	57	41	39	53	38	36	49	35	33	45	33	0	42	0	0	40	0	0
		10:12	39.8	Non-Exposed	61	61	61	61	61	61	61	61	61	61	61	61	61	61	61	61	61	61	61	61	60	61	59	57	60	53	51	59	49	46	57	45	42	56	42	39	54	39	37	50	37	34
				Exposed	61	61	61	61	61	61	61	60	58	61	56	54	61	53	51	61	50	48	61	48	45	61	45	43	57	41	39	52	38	36	48	35	33	45	33	0	42	0	0	40	0	0
		11:12	42.5	Non-Exposed	63	63	63	63	63	63	63	63	63	63	63	63	63	63	63	63	63	63	63	62	60	63	59	57	62	53	51	61	49	46	59	45	42	57	42	39	54	39	37	50	37	34
				Exposed	63	63	63	63	63	62	63	60	58	63	56	54	63	53	51	63	50	48	63	48	45	62	45	43	57	41	39	52	38	36	48	35	33	45	33	0	42	0	0	40	0	0
		12:12	45	Non-Exposed	66	66	66	66	66	66	66	66	66	66	66	66	66	66	66	66	65	64	66	62	60	66	59	57	64	53	51	63	49	46	61	45	42	57	42	39	54	39	37	50	37	34
				Exposed	66	66	66	66	63	62	66	59	58	66	56	54	66	53	51	66	50	48	65	48	45	62	45	43	57	41	39	52	38	36	48	35	33	45	33	0	42	0	0	40	0	0

Tamarack 2.3 Rail – Hip Flush-Mount on 30 Foot Maximum Mean Roof Height – Portrait – Panel Length = 68 Inches or Less

Ground Snow Load	Exposure Category	Roof Pitch	Roof Angle	Wind Speed (mph)	95			100			105			110			115			120			125			130			140			150			160			170			180			190		
				Roof Area	1	2	3	1	2	3	1	2	3	1	2	3	1	2	3	1	2	3	1	2	3	1	2	3	1	2	3	1	2	3	1	2	3	1	2	3	1	2	3	1	2	3
40	B	2:12	9.5	Non-Exposed	49	49	49	49	49	49	49	49	49	49	49	49	49	49	49	49	49	49	49	49	49	49	49	49	49	49	49	49	49	49	49	49	49	49	49	49	49	49	49	49	49	49
				Exposed	49	49	49	49	49	49	49	49	49	49	49	49	49	49	49	49	49	49	49	49	49	49	49	49	49	49	49	49	49	49	49	49	48	49	47	44	49	44	41	48	41	39
		3:12	14.0	Non-Exposed	47	47	47	47	47	47	47	47	47	47	47	47	47	47	47	47	47	47	47	47	47	47	47	47	47	47	47	47	47	47	47	47	47	47	47	47	47	47	47	47	47	47
				Exposed	47	47	47	47	47	47	47	47	47	47	47	47	47	47	47	47	47	47	47	47	47	47	47	47	47	47	47	47	47	47	47	47	47	47	47	44	47	43	41	47	41	39
		4:12	18.4	Non-Exposed	47	47	47	47	47	47	47	47	47	47	47	47	47	47	47	47	47	47	47	47	47	47	47	47	47	47	47	47	47	47	47	47	47	47	47	47	47	47	47	47	47	47
				Exposed	47	47	47	47	47	47	47	47	47	47	47	47	47	47	47	47	47	47	47	47	47	47	47	47	47	47	47	47	47	47	47	47	47	47	46	44	47	43	41	47	41	39
		5:12	22.6	Non-Exposed	48	48		48	48		48	48		48	48		48	48		48	48		48	48		48	48		48	48		48	48		48	48		48	48		48	48		48	48	
				Exposed	48	48		48	48		48	48		48	48		48	48		48	48		48	48		48	48		48	48		48	48		48	48		48	48		48	48		48	45	
		6:12	26.6	Non-Exposed	50	50		50	50		50	50		50	50		50	50		50	50		50	50		50	50		50	50		50	50		50	50		50	50		50	50		50	50	
				Exposed	50	50		50	50		50	50		50	50		50	50		50	50		50	50		50	50		50	50		50	50		50	50		50	50		50	48		50	45	
		7:12	30.3	Non-Exposed	51	51	51	51	51	51	51	51	51	51	51	51	51	51	51	51	51	51	51	51	51	51	51	51	51	51	51	51	51	51	51	51	51	51	51	51	51	50	48	51	50	48
				Exposed	51	51	51	51	51	51	51	51	51	51	51	51	51	51	51	51	51	51	51	51	51	51	51	51	51	51	51	51	51	50	51	48	46	51	45	42	51	42	39	51	39	37
		8:12	33.7	Non-Exposed	53	53	53	53	53	53	53	53	53	53	53	53	53	53	53	53	53	53	53	53	53	53	53	53	53	53	53	53	53	53	53	53	53	53	53	53	53	53	52	53	50	48
				Exposed	53	53	53	53	53	53	53	53	53	53	53	53	53	53	53	53	53	53	53	53	53	53	53	53	53	53	53	53	52	50	53	48	46	53	45	42	53	41	39	53	39	37
		9:12	36.9	Non-Exposed	56	56	56	56	56	56	56	56	56	56	56	56	56	56	56	56	56	56	56	56	56	56	56	56	56	56	56	56	56	56	56	56	56	56	56	56	55	54	52	55	50	48
				Exposed	56	56	56	56	56	56	56	56	56	56	56	56	56	56	56	56	56	56	56	56	55	56	56	56	56	56	55	56	52	50	56	48	46	56	45	42	55	41	39	54	39	36
		10:12	39.8	Non-Exposed	59	59	59	59	59	59	59	59	59	59	59	59	59	59	59	59	59	59	59	59	59	59	59	59	59	59	59	59	59	59	59	59	59	58	58	56	57	54	51	57	50	48
				Exposed	59	59	59	59	59	59	59	59	59	59	59	59	59	59	59	59	59	59	59	59	59	59	59	59	59	57	55	59	52	50	59	48	46	58	44	42	57	41	39	54	39	36
		11:12	42.5	Non-Exposed	61	61	61	61	61	61	61	61	61	61	61	61	61	61	61	61	61	61	61	61	61	61	61	61	61	61	61	61	61	61	61	61	61	60	58	56	59	53	51	59	50	48
				Exposed	61	61	61	61	61	61	61	61	61	61	61	61	61	61	61	61	61	61	61	61	61	61	61	61	61	57	55	61	52	50	61	48	45	60	44	42	57	41	39	53	39	36
		12:12	45	Non-Exposed	63	63	63	63	63	63	63	63	63	63	63	63	63	63	63	63	63	63	63	63	63	63	63	63	63	63	63	63	63	63	63	62	61	63	57	56	62	53	51	61	50	47
				Exposed	63	63	63	63	63	63	63	63	63	63	63	63	63	63	63	63	63	63	63	63	63	63	62	61	63	57	55	63	52	50	63	48	45	61	44	42	57	41	39	53	39	36
	C	2:12	9.5	Non-Exposed	49	49	49	49	49	49	49	49	49	49	49	49	49	49	49	49	49	49	49	49	49	49	49	49	49	49	49	49	49	49	49	49	49	49	49	46	48	45	43	47	42	41
				Exposed	49	49	49	49	49	49	49	49	49	49	49	49	49	49	49	49	49	49	49	49	49	49	49	49	49	48	46	49	44	42	48	41	39	45	39	37	42	36	35	40	34	33
		3:12	14.0	Non-Exposed	47	47	47	47	47	47	47	47	47	47	47	47	47	47	47	47	47	47	47	47	47	47	47	47	47	47	47	47	47	47	47	47	47	47	47	46	47	45	43	46	42	41
				Exposed	47	47	47	47	47	47	47	47	47	47	47	47	47	47	47	47	47	47	47	47	47	47	47	47	47	47	46	47	44	42	47	41	39	45	38	37	42	36	35	40	34	33
		4:12	18.4	Non-Exposed	47	47	47	47	47	47	47	47	47	47	47	47	47	47	47	47	47	47	47	47	47	47	47	47	47	47	47	47	47	47	47	47	47	47	47	46	47	45	43	46	42	41
				Exposed	47	47	47	47	47	47	47	47	47	47	47	47	47	47	47	47	47	47	47	47	47	47	47	47	47	47	46	47	44	42	47	41	39	45	38	37	42	36	35	40	34	33
		5:12	22.6	Non-Exposed	48	48		48	48		48	48		48	48		48	48		48	48		48	48		48	48		48	48		48	48		48	48		48	48		47	47		47	47	
				Exposed	48	48		48	48		48	48		48	48		48	48		48	48		48	48		48	48		48	48		48	48		48	45		48	42		47	40		46	38	
		6:12	26.6	Non-Exposed	50	50		50	50		50	50		50	50		50	50		50	50		50	50		50	50		50	50		50	50		50	50		49	49		48	48		48	47	
				Exposed	50	50		50	50		50	50		50	50		50	50		50	50		50	50		50	50		50	50		50	49		50	45		49	42		48	40		46	38	
		7:12	30.3	Non-Exposed	51	51	51	51	51	51	51	51	51	51	51	51	51	51	51	51	51	51	51	51	51	51	51	51	51	51	51	51	51	51	51	51	48	51	47	44	50	43	41	49	41	38
				Exposed	51	51	51	51	51	51	51	51	51	51	51	51	51	51	51	51	51	51	51	51	51	51	51	48	51	46	44	51	42	40	51	39	37	50	36	34	47	34	32	44	32	0
		8:12	33.7	Non-Exposed	53	53	53	53	53	53	53	53	53	53	53	53	53	53	53	53	53	53	53	53	53	53	53	53	53	53	53	53	53	53	53	50	48	52	47	44	51	43	41	50	41	38
				Exposed	53	53	53	53	53	53	53	53	53	53	53	53	53	53	53	53	53	53	53	53	51	53	51	48	53	46	43	53	42	40	53	39	37	50	36	34	47	34	32	44	32	0
		9:12	36.9	Non-Exposed	56	56	56	56	56	56	56	56	56	56	56	56	56	56	56	56	56	56	56	56	56	56	56	56	56	56	56	56	55	53	55	50	48	54	47	44	53	43	41	52	40	38
				Exposed	56	56	56	56	56	56	56	56	56	56	56	56	56	56	56	56	56	54	56	53	51	56	51	48	56	46	43	56	42	40	54	39	37	50	36	34	47	34	32	44	32	0
		10:12	39.8	Non-Exposed	59	59	59	59	59	59	59	59	59	59	59	59	59	59	59	59	59	59	59	59	59	59	59	59	59	59	58	58	55	52	57	50	48	56	46	44	54	43	41	53	40	38
				Exposed	59	59	59	59	59	59	59	59	59	59	59	59	59	59	57	59	56	54	59	53	51	59	51	48	59	46	43	58	42	40	54	39	37	50	36	34	47	34	32	44	32	0
		11:12	42.5	Non-Exposed	61	61	61	61	61	61	61	61	61	61	61	61	61	61	61	61	61	61	61	61	61	61	61	61	61	59	58	60	54	52	59	50	48	57	46	44	56	43	41	55	40	38
				Exposed	61	61	61	61	61	61	61	61	61	61	61	61	61	59	57	61	56	54	61	53	51	61	50	48	61	46	43	58	42	40	54	39	37	50	36	34	46	34	32	44	32	0
		12:12	45	Non-Exposed	63	63	63	63	63	63	63	63	63	63	63	63	63	63	63	63	63	63	63	63	63	63	63	63	63	59	58	62	54	52	61	50	48	59	46	44	58	43	41	56	40	38
				Exposed	63	63	63	63	63	63	63	63	63	63	62	61	63	59	57	63	56	54	63	53	51	63	50	48	63	46	43	58	42	40	54	39	36	50	36	34	46	34	32	43	32	0
	D	2:12	9.5	Non-Exposed	49	49	49	49	49	49	49	49	49	49	49	49	49	49	49	49	49	49	49	49	49	49	49	49	49	49	49	49	49	49	49	47	45	48	44	42	47	41	39	45	39	37
				Exposed	49	49	49	49	49	49	49	49	49	49	49	49	49	49	49	49	49	49	49	49	48	49	48	45	49	43	41	47	40	39	44	38	36	41	35	34	39	33	0	37	0	0
		3:12	14.0	Non-Exposed	47	47	47	47	47	47	47	47	47	47	47	47	47	47	47	47	47	47	47	47	47	47	47	47	47	47	47	47	47	47	47	47	45	46	44	42	46	41	39	45	39	37
				Exposed	47	47	47	47	47	47	47	47	47	47	47	47	47	47	47	47	47	47	47	47	47	47	47	45	47	43	41	47	40	39	44	38	36	41	35	34	39	33	0	37	0	0
		4:12	18.4	Non-Exposed	47	47	47	47	47	47	47	47	47	47	47	47	47	47	47	47	47	47	47	47	47	47	47	47	47	47	47	47	47	47	47	47	45	46	44	42	46	41	39	45	39	37
				Exposed	47	47	47	47	47	47	47	47	47	47	47	47	47	47	47	47	47	47	47	47	47	47	47	45	47	43	41	47	40	38	44	38	36	41	35	34	39	33	0	36	0	0
		5:12	22.6	Non-Exposed	48	48		48	48		48	48		48	48		48	48		48	48		48	48		48	48		48	48		48	48		48	48		47	47		46	46		45	43	
				Exposed	48	48		48	48		48	48		48	48		48	48		48	48		48	48		48	48		48	48		48	44		48	41		47	39		44	36		41	35	
		6:12	26.6	Non-Exposed	50	50		50	50		50	50		50	50		50	50		50	50		50	50		50	50		50	50		50	50		49	49		48	48		47	45		46	43	
				Exposed	50	50		50	50		50	50		50	50		50	50		50	50		50	50		50	50		50	48		50	44		49	41		47	39		44	36		41	34	
		7:12	30.3	Non-Exposed	51	51	51	51	51	51	51	51	51	51	51	51	51	51	51	51	51	51	51	51	51	51	51	51	51	51	51	51	49	47	50	45	43	49	42	39	48	39	37	47	37	34
				Exposed	51	51	51	51	51	51	51	51	51	51	51	51	51	51	51	51	51	48	51	48	45	51	46	43	51	41	39	51	38	36	49	35	33	45	33	0	42	0	0	40	0	0
		8:12	33.7	Non-Exposed	53	53	53	53	53	53	53	53	53	53	53	53	53	53	53	53	53	53	53	53	53	53	53	53	53	53	52	53	49	47	52	45	43	51	42	39	50	39	37	49	37	34
				Exposed	53	53	53	53	53	53	53	53	53	53	53	53	53	53	51	53	50	48	53	48	45	53	45	43	53	41	39	53	38	36	49	35	33	45	33	0	42	0	0	40	0	0
		9:12	36.9	Non-Exposed	56	56	56	56	56	56	56	56	56	56	56	56	56	56	56	56	56	56	56	56	56	56	56	56	55	54	51	54	49	47	53	45	43	52	42	39	51	39	37	50	37	34
				Exposed	56	56	56	56	56	56	56	56	56	56	56	54	56	53	51	56	50	48	56	48	45	56	45	43	55	41	39	53	38	36	49	35	33	45	33	0	42	0	0	40	0	0
		10:12	39.8	Non-Exposed	59	59	59	59	59	59	59	59	59	59	59	59	59	59	59	59	59	59	59	59	59	58	58	57	57	53	51	56	49	46	55	45	42	54	42	39	53	39	37	50	37	34
				Exposed	59	59	59	59	59	59	59	59	58	59	56	54	59	53	51	59	50	48	59	48	45	58	45	43	57	41	39	52	38	36	48	35	33	45	33	0	42	0	0	40	0	0
		11:12	42.5	Non-Exposed	61	61	61	61	61	61	61	61	61	61	61	61	61	61	61	61	61	61	61	61	60	61	59	57	59	53	51	58	49	46	57	45	42	56	42	39	54	39	37	50	37	34
				Exposed	61	61	61	61	61	61	61	60	58	61	56	54	61	53	51	61	50	48	61	48	45	61	45	43	57	41	39	52	38	36	48	35	33	45	33	0	42	0	0	40	0	0
		12:12	45	Non-Exposed	63	63	63	63	63	63	63	63	63	63	63	63	63	63	63	63	63	63	63	62	60	63	59	57	62	53	51	60	49	46	59	45	42	57	42	39	54	39	37	50	37	34
				Exposed	63	63	63	63	63	62	63	59	58	63	56	54	63	53	51	63	50	48	63	48	45	62	45	43	57	41	39	52	38	36	48	35	33	45	33	0	42	0	0	40	0	0

Tamarack 2.3 Rail – Hip Flush-Mount on 30 Foot Maximum Mean Roof Height – Portrait – Panel Length = 68 Inches or Less

Ground Snow Load	Exposure Category	Roof Pitch	Roof Angle	Wind Speed (mph)	95			100			105			110			115			120			125			130			140			150			160			170			180			190		
				Roof Area	1	2	3	1	2	3	1	2	3	1	2	3	1	2	3	1	2	3	1	2	3	1	2	3	1	2	3	1	2	3	1	2	3	1	2	3	1	2	3	1	2	3
45	B	2:12	9.5	Non-Exposed	46	46	46	46	46	46	46	46	46	46	46	46	46	46	46	46	46	46	46	46	46	46	46	46	46	46	46	46	46	46	46	46	46	46	46	46	46	46	46	46	46	46
				Exposed	46	46	46	46	46	46	46	46	46	46	46	46	46	46	46	46	46	46	46	46	46	46	46	46	46	46	46	46	46	46	46	46	46	46	46	44	46	44	41	46	41	39
		3:12	14.0	Non-Exposed	45	45	45	45	45	45	45	45	45	45	45	45	45	45	45	45	45	45	45	45	45	45	45	45	45	45	45	45	45	45	45	45	45	45	45	45	45	45	45	45	45	45
				Exposed	45	45	45	45	45	45	45	45	45	45	45	45	45	45	45	45	45	45	45	45	45	45	45	45	45	45	45	45	45	45	45	45	45	45	45	44	45	43	41	45	41	39
		4:12	18.4	Non-Exposed	45	45	45	45	45	45	45	45	45	45	45	45	45	45	45	45	45	45	45	45	45	45	45	45	45	45	45	45	45	45	45	45	45	45	45	45	45	45	45	45	45	45
				Exposed	45	45	45	45	45	45	45	45	45	45	45	45	45	45	45	45	45	45	45	45	45	45	45	45	45	45	45	45	45	45	45	45	45	45	45	44	45	43	41	45	41	39
		5:12	22.6	Non-Exposed	46	46		46	46		46	46		46	46		46	46		46	46		46	46		46	46		46	46		46	46		46	46		46	46		46	46		46	46	
				Exposed	46	46		46	46		46	46		46	46		46	46		46	46		46	46		46	46		46	46		46	46		46	46		46	46		46	46		46	45	
		6:12	26.6	Non-Exposed	47	47		47	47		47	47		47	47		47	47		47	47		47	47		47	47		47	47		47	47		47	47		47	47		47	47		47	47	
				Exposed	47	47		47	47		47	47		47	47		47	47		47	47		47	47		47	47		47	47		47	47		47	47		47	47		47	47		47	45	
		7:12	30.3	Non-Exposed	49	49	49	49	49	49	49	49	49	49	49	49	49	49	49	49	49	49	49	49	49	49	49	49	49	49	49	49	49	49	49	49	49	49	49	49	49	49	49	49	49	48
				Exposed	49	49	49	49	49	49	49	49	49	49	49	49	49	49	49	49	49	49	49	49	49	49	49	49	49	49	49	49	49	49	49	48	46	49	45	42	49	42	39	49	39	37
		8:12	33.7	Non-Exposed	51	51	51	51	51	51	51	51	51	51	51	51	51	51	51	51	51	51	51	51	51	51	51	51	51	51	51	51	51	51	51	51	51	51	51	51	51	51	51	50	48
				Exposed	51	51	51	51	51	51	51	51	51	51	51	51	51	51	51	51	51	51	51	51	51	51	51	51	51	51	51	51	51	50	51	48	46	51	45	42	51	41	39	51	39	37
		9:12	36.9	Non-Exposed	53	53	53	53	53	53	53	53	53	53	53	53	53	53	53	53	53	53	53	53	53	53	53	53	53	53	53	53	53	53	53	53	53	53	53	53	53	53	52	53	50	48
				Exposed	53	53	53	53	53	53	53	53	53	53	53	53	53	53	53	53	53	53	53	53	53	53	53	53	53	53	53	53	52	50	53	48	46	53	45	42	53	41	39	53	39	36
		10:12	39.8	Non-Exposed	56	56	56	56	56	56	56	56	56	56	56	56	56	56	56	56	56	56	56	56	56	56	56	56	56	56	56	56	56	56	56	56	56	56	56	56	55	54	51	54	50	48
				Exposed	56	56	56	56	56	56	56	56	56	56	56	56	56	56	56	56	56	56	56	56	55	56	56	56	56	56	55	56	52	50	56	48	46	56	44	42	55	41	39	54	39	36
		11:12	42.5	Non-Exposed	58	58	58	58	58	58	58	58	58	58	58	58	58	58	58	58	58	58	58	58	58	58	58	58	58	58	58	58	58	58	58	58	56	57	53	51	56	50	48
				Exposed	58	58	58	58	58	58	58	58	58	58	58	58	58	58	58	58	58	58	58	58	58	58	58	58	58	57	55	58	52	50	58	48	45	58	44	42	57	41	39	53	39	36
		12:12	45	Non-Exposed	61	61	61	61	61	61	61	61	61	61	61	61	61	61	61	61	61	61	61	61	61	61	61	61	61	61	61	61	61	61	61	61	61	60	57	56	60	53	51	59	50	47
				Exposed	61	61	61	61	61	61	61	61	61	61	61	61	61	61	61	61	61	61	61	61	61	61	61	61	61	57	55	61	52	50	61	48	45	60	44	42	57	41	39	53	39	36
	C	2:12	9.5	Non-Exposed	46	46	46	46	46	46	46	46	46	46	46	46	46	46	46	46	46	46	46	46	46	46	46	46	46	46	46	46	46	46	46	46	46	46	46	46	46	45	43	46	42	41
				Exposed	46	46	46	46	46	46	46	46	46	46	46	46	46	46	46	46	46	46	46	46	46	46	46	46	46	46	46	46	44	42	46	41	39	45	39	37	42	36	35	40	34	33
		3:12	14.0	Non-Exposed	45	45	45	45	45	45	45	45	45	45	45	45	45	45	45	45	45	45	45	45	45	45	45	45	45	45	45	45	45	45	45	45	45	45	45	45	45	45	43	44	42	41
				Exposed	45	45	45	45	45	45	45	45	45	45	45	45	45	45	45	45	45	45	45	45	45	45	45	45	45	45	45	45	44	42	45	41	39	45	38	37	42	36	35	40	34	33
		4:12	18.4	Non-Exposed	45	45	45	45	45	45	45	45	45	45	45	45	45	45	45	45	45	45	45	45	45	45	45	45	45	45	45	45	45	45	45	45	45	45	45	45	45	45	43	44	42	41
				Exposed	45	45	45	45	45	45	45	45	45	45	45	45	45	45	45	45	45	45	45	45	45	45	45	45	45	45	45	45	44	42	45	41	39	45	38	37	42	36	35	40	34	33
		5:12	22.6	Non-Exposed	46	46		46	46		46	46		46	46		46	46		46	46		46	46		46	46		46	46		46	46		46	46		46	46		45	45		45	45	
				Exposed	46	46		46	46		46	46		46	46		46	46		46	46		46	46		46	46		46	46		46	46		46	45		46	42		45	40		45	38	
		6:12	26.6	Non-Exposed	47	47		47	47		47	47		47	47		47	47		47	47		47	47		47	47		47	47		47	47		47	47		47	47		46	46		46	46	
				Exposed	47	47		47	47		47	47		47	47		47	47		47	47		47	47		47	47		47	47		47	47		47	45		47	42		46	40		46	38	
45		7:12	30.3	Non-Exposed	49	49	49	49	49	49	49	49	49	49	49	49	49	49	49	49	49	49	49	49	49	49	49	49	49	49	49	49	49	49	49	49	48	48	47	44	48	43	41	47	41	38
				Exposed	49	49	49	49	49	49	49	49	49	49	49	49	49	49	49	49	49	49	49	49	49	49	49	49	49	46	44	49	42	40	49	39	37	48	36	34	47	34	32	44	32	0
		8:12	33.7	Non-Exposed	51	51	51	51	51	51	51	51	51	51	51	51	51	51	51	51	51	51	51	51	51	51	51	51	51	51	51	51	51	51	51	50	48	50	47	44	49	43	41	48	41	38
				Exposed	51	51	51	51	51	51	51	51	51	51	51	51	51	51	51	51	51	51	51	51	51	51	51	48	51	46	43	51	42	40	51	39	37	50	36	34	47	34	32	44	32	0
		9:12	36.9	Non-Exposed	53	53	53	53	53	53	53	53	53	53	53	53	53	53	53	53	53	53	53	53	53	53	53	53	53	53	53	53	53	53	53	50	48	52	47	44	51	43	41	50	40	38
				Exposed	53	53	53	53	53	53	53	53	53	53	53	53	53	53	53	53	53	53	53	53	51	53	51	48	53	46	43	53	42	40	53	39	37	50	36	34	47	34	32	44	32	0
		10:12	39.8	Non-Exposed	56	56	56	56	56	56	56	56	56	56	56	56	56	56	56	56	56	56	56	56	56	56	56	56	56	56	56	55	55	52	54	50	48	54	46	44	53	43	41	52	40	38
				Exposed	56	56	56	56	56	56	56	56	56	56	56	56	56	56	56	56	56	54	56	53	51	56	51	48	56	46	43	55	42	40	54	39	37	50	36	34	47	34	32	44	32	0
		11:12	42.5	Non-Exposed	58	58	58	58	58	58	58	58	58	58	58	58	58	58	58	58	58	58	58	58	58	58	58	58	58	58	58	58	54	52	56	50	48	55	46	44	54	43	41	53	40	38
				Exposed	58	58	58	58	58	58	58	58	58	58	58	58	58	58	57	58	56	54	58	53	51	58	50	48	58	46	43	58	42	40	54	39	37	50	36	34	46	34	32	44	32	0
		12:12	45	Non-Exposed	61	61	61	61	61	61	61	61	61	61	61	61	61	61	61	61	61	61	61	61	61	61	61	61	61	59	58	60	54	52	59	50	48	57	46	44	56	43	41	55	40	38
				Exposed	61	61	61	61	61	61	61	61	61	61	61	61	61	59	57	61	56	54	61	53	51	61	50	48	61	46	43	58	42	40	54	39	36	50	36	34	46	34	32	43	32	0
	D	2:12	9.5	Non-Exposed	46	46	46	46	46	46	46	46	46	46	46	46	46	46	46	46	46	46	46	46	46	46	46	46	46	46	46	46	46	46	46	46	45	46	44	42	45	41	39	44	39	37
				Exposed	46	46	46	46	46	46	46	46	46	46	46	46	46	46	46	46	46	46	46	46	46	46	46	45	46	43	41	46	40	39	44	38	36	41	35	34	39	33	0	37	0	0
		3:12	14.0	Non-Exposed	45	45	45	45	45	45	45	45	45	45	45	45	45	45	45	45	45	45	45	45	45	45	45	45	45	45	45	45	45	45	45	45	45	44	44	42	44	41	39	43	39	37
				Exposed	45	45	45	45	45	45	45	45	45	45	45	45	45	45	45	45	45	45	45	45	45	45	45	45	45	43	41	45	40	39	44	38	36	41	35	34	39	33	0	37	0	0
		4:12	18.4	Non-Exposed	45	45	45	45	45	45	45	45	45	45	45	45	45	45	45	45	45	45	45	45	45	45	45	45	45	45	45	45	45	45	45	45	45	44	44	42	44	41	39	43	39	37
				Exposed	45	45	45	45	45	45	45	45	45	45	45	45	45	45	45	45	45	45	45	45	45	45	45	45	45	43	41	45	40	38	44	38	36	41	35	34	39	33	0	36	0	0
		5:12	22.6	Non-Exposed	46	46		46	46		46	46		46	46		46	46		46	46		46	46		46	46		46	46		46	46		46	46		45	45		44	44		44	43	
				Exposed	46	46		46	46		46	46		46	46		46	46		46	46		46	46		46	46		46	46		46	44		46	41		45	39		44	36		41	35	
		6:12	26.6	Non-Exposed	47	47		47	47		47	47		47	47		47	47		47	47		47	47		47	47		47	47		47	47		47	47		46	46		45	45		44	43	
				Exposed	47	47		47	47		47	47		47	47		47	47		47	47		47	47		47	47		47	47		47	44		47	41		46	39		44	36		41	34	
		7:12	30.3	Non-Exposed	49	49	49	49	49	49	49	49	49	49	49	49	49	49	49	49	49	49	49	49	49	49	49	49	49	49	49	49	49	47	48	45	43	47	42	39	46	39	37	46	37	34
				Exposed	49	49	49	49	49	49	49	49	49	49	49	49	49	49	49	49	49	48	49	48	45	49	46	43	49	41	39	49	38	36	48	35	33	45	33	0	42	0	0	40	0	0
		8:12	33.7	Non-Exposed	51	51	51	51	51	51	51	51	51	51	51	51	51	51	51	51	51	51	51	51	51	51	51	51	51	51	51	51	49	47	50	45	43	49	42	39	48	39	37	47	37	34
				Exposed	51	51	51	51	51	51	51	51	51	51	51	51	51	51	51	51	50	48	51	48	45	51	45	43	51	41	39	51	38	36	49	35	33	45	33	0	42	0	0	40	0	0
		9:12	36.9	Non-Exposed	53	53	53	53	53	53	53	53	53	53	53	53	53	53	53	53	53	53	53	53	53	53	53	53	53	53	51	52	49	47	51	45	43	50	42	39	49	39	37	48	37	34
				Exposed	53	53	53	53	53	53	53	53	53	53	53	53	53	53	51	53	50	48	53	48	45	53	45	43	53	41	39	52	38	36	49	35	33	45	33	0	42	0	0	40	0	0
		10:12	39.8	Non-Exposed	56	56	56	56	56	56	56	56	56	56	56	56	56	56	56	56	56	56	56	56	56	56	56	56	55	53	51	54	49	46	53	45	42	52	42	39	51	39	37	50	37	34
				Exposed	56	56	56	56	56	56	56	56	56	56	56	54	56	53	51	56	50	48	56	48	45	56	45	43	55	41	39	52	38	36	48	35	33	45	33	0	42	0	0	40	0	0
		11:12	42.5	Non-Exposed	58	58	58	58	58	58	58	58	58	58	58	58	58	58	58	58	58	58	58	58	58	58	58	57	57	53	51	56	49	46	55	45	42	54	42	39	53	39	37	50	37	34
				Exposed	58	58	58	58	58	58	58	58	58	58	56	54	58	53	51	58	50	48	58	48	45	58	45	43	57	41	39	52	38	36	48	35	33	45	33	0	42	0	0	40	0	0
		12:12	45	Non-Exposed	61	61	61	61	61	61	61	61	61	61	61	61	61	61	61	61	61	61	61	61	60	61	59	57	59	53	51	58	49	46	57	45	42	56	42	39	54	39	37	50	37	34
				Exposed	61	61	61	61	61	61	61	59	58	61	56	54	61	53	51	61	50	48	61	48	45	61	45	43	57	41	39	52	38	36	48	35	33	45	33	0	42	0	0	40	0	0

Tamarack 2.3 Rail – Hip Flush-Mount on 30 Foot Maximum Mean Roof Height – Portrait – Panel Length = 68 Inches or Less

Ground Snow Load	Exposure Category	Roof Pitch	Roof Angle	Wind Speed (mph)	95			100			105			110			115			120			125			130			140			150			160			170			180			190		
				Roof Area	1	2	3	1	2	3	1	2	3	1	2	3	1	2	3	1	2	3	1	2	3	1	2	3	1	2	3	1	2	3	1	2	3	1	2	3	1	2	3	1	2	3
50	B	2:12	9.5	Non-Exposed	44	44	44	44	44	44	44	44	44	44	44	44	44	44	44	44	44	44	44	44	44	44	44	44	44	44	44	44	44	44	44	44	44	44	44	44	44	44	44	44	44	44
				Exposed	44	44	44	44	44	44	44	44	44	44	44	44	44	44	44	44	44	44	44	44	44	44	44	44	44	44	44	44	44	44	44	44	44	44	44	44	44	44	41	44	41	39
		3:12	14.0	Non-Exposed	42	42	42	42	42	42	42	42	42	42	42	42	42	42	42	42	42	42	42	42	42	42	42	42	42	42	42	42	42	42	42	42	42	42	42	42	42	42	42	42	42	42
				Exposed	42	42	42	42	42	42	42	42	42	42	42	42	42	42	42	42	42	42	42	42	42	42	42	42	42	42	42	42	42	42	42	42	42	42	42	42	42	42	41	42	41	39
		4:12	18.4	Non-Exposed	42	42	42	42	42	42	42	42	42	42	42	42	42	42	42	42	42	42	42	42	42	42	42	42	42	42	42	42	42	42	42	42	42	42	42	42	42	42	42	42	42	42
				Exposed	42	42	42	42	42	42	42	42	42	42	42	42	42	42	42	42	42	42	42	42	42	42	42	42	42	42	42	42	42	42	42	42	42	42	42	42	42	42	41	42	41	39
		5:12	22.6	Non-Exposed	43	43		43	43		43	43		43	43		43	43		43	43		43	43		43	43		43	43		43	43		43	43		43	43		43	43		43	43	
				Exposed	43	43		43	43		43	43		43	43		43	43		43	43		43	43		43	43		43	43		43	43		43	43		43	43		43	43		43	43	
		6:12	26.6	Non-Exposed	45	45		45	45		45	45		45	45		45	45		45	45		45	45		45	45		45	45		45	45		45	45		45	45		45	45		45	45	
				Exposed	45	45		45	45		45	45		45	45		45	45		45	45		45	45		45	45		45	45		45	45		45	45		45	45		45	45		45	45	
		7:12	30.3	Non-Exposed	46	46	46	46	46	46	46	46	46	46	46	46	46	46	46	46	46	46	46	46	46	46	46	46	46	46	46	46	46	46	46	46	46	46	46	46	46	46	46	46	46	46
				Exposed	46	46	46	46	46	46	46	46	46	46	46	46	46	46	46	46	46	46	46	46	46	46	46	46	46	46	46	46	46	46	46	46	46	46	45	42	46	42	39	46	39	37
		8:12	33.7	Non-Exposed	48	48	48	48	48	48	48	48	48	48	48	48	48	48	48	48	48	48	48	48	48	48	48	48	48	48	48	48	48	48	48	48	48	48	48	48	48	48	48	48	48	48
				Exposed	48	48	48	48	48	48	48	48	48	48	48	48	48	48	48	48	48	48	48	48	48	48	48	48	48	48	48	48	48	46	48	45	42	48	41	39	48	39	37	48	39	37
		9:12	36.9	Non-Exposed	50	50	50	50	50	50	50	50	50	50	50	50	50	50	50	50	50	50	50	50	50	50	50	50	50	50	50	50	50	50	50	50	50	50	50	50	50	50	48	50	50	48
				Exposed	50	50	50	50	50	50	50	50	50	50	50	50	50	50	50	50	50	50	50	50	50	50	50	50	50	50	50	50	48	46	50	45	42	50	41	39	50	39	36	50	39	36
		10:12	39.8	Non-Exposed	53	53	53	53	53	53	53	53	53	53	53	53	53	53	53	53	53	53	53	53	53	53	53	53	53	53	53	53	53	53	53	53	53	53	53	53	53	53	51	53	50	48
				Exposed	53	53	53	53	53	53	53	53	53	53	53	53	53	53	53	53	53	53	53	53	53	53	53	53	53	53	53	53	48	46	53	45	42	53	41	39	53	39	36	53	39	36
		11:12	42.5	Non-Exposed	56	56	56	56	56	56	56	56	56	56	56	56	56	56	56	56	56	56	56	56	56	56	56	56	56	56	56	56	56	56	56	56	56	55	53	51	55	50	48	55	50	48
				Exposed	56	56	56	56	56	56	56	56	56	56	56	56	56	56	56	56	56	56	56	56	56	56	56	56	56	56	55	56	52	50	56	48	45	56	44	42	55	41	39	53	39	36
		12:12	45	Non-Exposed	59	59	59	59	59	59	59	59	59	59	59	59	59	59	59	59	59	59	59	59	59	59	59	59	59	59	59	59	59	59	59	59	59	58	57	56	58	53	51	57	50	47
				Exposed	59	59	59	59	59	59	59	59	59	59	59	59	59	59	59	59	59	59	59	59	59	59	59	59	59	57	55	59	52	50	59	48	45	58	44	42	57	41	39	53	39	36
	C	2:12	9.5	Non-Exposed	44	44	44	44	44	44	44	44	44	44	44	44	44	44	44	44	44	44	44	44	44	44	44	44	44	44	44	44	44	44	44	44	44	44	44	44	44	44	43	44	42	41
				Exposed	44	44	44	44	44	44	44	44	44	44	44	44	44	44	44	44	44	44	44	44	44	44	44	44	44	44	44	44	44	42	44	41	39	44	39	37	42	36	35	40	34	33
		3:12	14.0	Non-Exposed	42	42	42	42	42	42	42	42	42	42	42	42	42	42	42	42	42	42	42	42	42	42	42	42	42	42	42	42	42	42	42	42	42	42	42	42	42	42	42	42	42	41
				Exposed	42	42	42	42	42	42	42	42	42	42	42	42	42	42	42	42	42	42	42	42	42	42	42	42	42	42	42	42	42	39	42	38	37	42	36	35	40	34	33	40	34	33
		4:12	18.4	Non-Exposed	42	42	42	42	42	42	42	42	42	42	42	42	42	42	42	42	42	42	42	42	42	42	42	42	42	42	42	42	42	42	42	42	42	42	42	42	42	42	42	42	42	41
				Exposed	42	42	42	42	42	42	42	42	42	42	42	42	42	42	42	42	42	42	42	42	42	42	42	42	42	42	42	42	42	39	42	38	37	42	36	35	40	34	33	40	34	33
		5:12	22.6	Non-Exposed	43	43		43	43		43	43		43	43		43	43		43	43		43	43		43	43		43	43		43	43		43	43		43	43		43	43		43	43	
				Exposed	43	43		43	43		43	43		43	43		43	43		43	43		43	43		43	43		43	43		43	43		43	43		43	42		43	40		43	38	
		6:12	26.6	Non-Exposed	45	45		45	45		45	45		45	45		45	45		45	45		45	45		45	45		45	45		45	45		45	45		45	45		45	45		44	44	
				Exposed	45	45		45	45		45	45		45	45		45	45		45	45		45	45		45	45		45	45		45	45		45	45		45	42		45	40		44	38	
50		7:12	30.3	Non-Exposed	46	46	46	46	46	46	46	46	46	46	46	46	46	46	46	46	46	46	46	46	46	46	46	46	46	46	46	46	46	46	46	46	44	46	43	41	45	41	38			
				Exposed	46	46	46	46	46	46	46	46	46	46	46	46	46	46	46	46	46	46	46	46	44	46	46	46	46	46	42	40	46	39	37	46	36	34	46	34	32	44	32	0			
		8:12	33.7	Non-Exposed	48	48	48	48	48	48	48	48	48	48	48	48	48	48	48	48	48	48	48	48	48	48	48	48	48	48	48	48	48	48	48	48	47	47	43	41	47	41	38			
				Exposed	48	48	48	48	48	48	48	48	48	48	48	48	48	48	48	48	48	48	48	48	43	48	42	40	48	39	37	48	36	34	47	34	32	44	32	0						
		9:12	36.9	Non-Exposed	50	50	50	50	50	50	50	50	50	50	50	50	50	50	50	50	50	50	50	50	50	50	50	50	50	50	50	50	50	48	50	47	44	49	43	41	48	40	38			
				Exposed	50	50	50	50	50	50	50	50	50	50	50	50	50	50	50	50	50	50	50	50	43	50	42	40	50	39	37	50	36	34	47	34	32	44	32	0						
		10:12	39.8	Non-Exposed	53	53	53	53	53	53	53	53	53	53	53	53	53	53	53	53	53	53	53	53	53	53	53	53	53	53	52	53	50	48	52	46	44	51	43	41	50	40	38			
				Exposed	53	53	53	53	53	53	53	53	53	53	53	53	53	53	53	53	53	53	53	51	43	53	42	40	53	39	37	50	36	34	47	34	32	44	32	0						
		11:12	42.5	Non-Exposed	56	56	56	56	56	56	56	56	56	56	56	56	56	56	56	56	56	56	56	56	56	56	56	56	56	54	52	55	50	48	54	46	44	53	43	41	52	40	38			
				Exposed	56	56	56	56	56	56	56	56	56	56	56	56	56	56	56	56	54	56	53	51	43	56	42	40	54	39	37	50	36	34	46	34	32	44	32	0						
		12:12	45	Non-Exposed	59	59	59	59	59	59	59	59	59	59	59	59	59	59	59	59	59	59	59	59	59	59	59	58	58	54	52	57	50	48	56	46	44	55	43	41	53	40	38			
				Exposed	59	59	59	59	59	59	59	59	59	59	59	59	59	59	57	59	56	54	59	53	51	59	50	48	59	46	43	58	42	40	54	39	36	50	36	34	46	34	32	43	32	0	
	D	2:12	9.5	Non-Exposed	44	44	44	44	44	44	44	44	44	44	44	44	44	44	44	44	44	44	44	44	44	44	44	44	44	44	44	44	44	44	44	44	42	43	41	39	43	39	37			
				Exposed	44	44	44	44	44	44	44	44	44	44	44	44	44	44	44	44	44	44	44	44	41	44	40	39	44	38	36	41	35	34	39	33	0	37	0	0						
		3:12	14.0	Non-Exposed	42	42	42	42	42	42	42	42	42	42	42	42	42	42	42	42	42	42	42	42	42	42	42	42	42	42	42	42	42	42	42	42	42	42	41	39	41	39	37			
				Exposed	42	42	42	42	42	42	42	42	42	42	42	42	42	42	42	42	42	42	42	42	41	42	40	39	42	38	36	41	35	34	39	33	0	37	0	0						
		4:12	18.4	Non-Exposed	42	42	42	42	42	42	42	42	42	42	42	42	42	42	42	42	42	42	42	42	42	42	42	42	42	42	42	42	42	42	42	42	42	42	41	39	41	39	37			
				Exposed	42	42	42	42	42	42	42	42	42	42	42	42	42	42	42	42	42	42	42	42	41	42	40	38	42	38	36	41	35	34	39	33	0	36	0	0						
		5:12	22.6	Non-Exposed	43	43		43	43		43	43		43	43		43	43		43	43		43	43		43	43		43	43		43	43		43	43		43	43		43	43		42	42	
				Exposed	43	43		43	43		43	43		43	43		43	43		43	43		43	43		43	43		43	43		43	43		43	41		43	39		43	36		41	35	
		6:12	26.6	Non-Exposed	45	45		45	45		45	45		45	45		45	45		45	45		45	45		45	45		45	45		45	45		45	45		44	44		44	44		43	43	
				Exposed	45	45		45	45		45	45		45	45		45	45		45	45		45	45		45	45		45	45		45	44		45	41		44	39		44	36		41	34	
		7:12	30.3	Non-Exposed	46	46	46	46	46	46	46	46	46	46	46	46	46	46	46	46	46	46	46	46	46	46	46	46	46	46	46	46	45	43	46	42	39	45	39	37	44	37	34			
				Exposed	46	46	46	46	46	46	46	46	46	46	46	46	46	46	46	46	46	46	46	45	43	46	41	39	46	38	36	46	35	33	45	33	0	42	0	0	40	0	0			
		8:12	33.7	Non-Exposed	48	48	48	48	48	48	48	48	48	48	48	48	48	48	48	48	48	48	48	48	48	48	48	48	48	48	47	48	45	43	47	42	39	46	39	37	45	37	34			
				Exposed	48	48	48	48	48	48	48	48	48	48	48	48	48	48	48	48	48	48	48	45	43	48	41	39	48	38	36	48	35	33	45	33	0	42	0	0	40	0	0			
		9:12	36.9	Non-Exposed	50	50	50	50	50	50	50	50	50	50	50	50	50	50	50	50	50	50	50	50	50	50	50	50	50	50	49	47	50	45	43	49	42	39	48	39	37	47	37	34			
				Exposed	50	50	50	50	50	50	50	50	50	50	50	50	50	50	50	50	50	48	50	48	45	50	45	43	50	41	39	50	38	36	49	35	33	45	33	0	42	0	0	40	0	0
		10:12	39.8	Non-Exposed	53	53	53	53	53	53	53	53	53	53	53	53	53	53	53	53	53	53	53	53	53	53	53	53	53	53	51	52	49	46	51	45	42	50	42	39	49	39	37	48	37	34
				Exposed	53	53	53	53	53	53	53	53	53	53	53	53	53	53	51	53	50	48	53	48	45	53	45	43	53	41	39	52	38	36	48	35	33	45	33	0	42	0	0	40	0	0
		11:12	42.5	Non-Exposed	56	56	56	56	56	56	56	56	56	56	56	56	56	56	56	56	56	56	56	56	56	56	56	55	53	51	54	49	46	53	45	42	52	42	39	51	39	37	50	37	34
				Exposed	56	56	56	56	56	56	56	56	56	56	56	54	56	53	51	56	50	48	56	48	45	56	45	43	55	41	39	52	38	36	48	35	33	45	33	0	42	0	0	40	0	0
		12:12	45	Non-Exposed	59	59	59	59	59	59	59	59	59	59	59	59	59	59	59	59	59	59	59	59	59	59	59	57	58	53	51	56	49	46	55	45	42	54	42	39	53	39	37	50	37	34
				Exposed	59	59	59	59	59	59	59	59	58	59	56	54	59	53	51	59	50	48	59	48	45	59	45	43	57	41	39	52	38	36	48	35	33	45	33	0	42	0	0	40	0	0

Tamarack 2.3 Rail – Hip Flush-Mount on 30 Foot Maximum Mean Roof Height – Portrait – Panel Length = 68 Inches or Less

Ground Snow Load	Exposure Category	Roof Pitch	Roof Angle	Wind Speed (mph)	95			100			105			110			115			120			125			130			140			150			160			170			180			190		
				Roof Area	1	2	3	1	2	3	1	2	3	1	2	3	1	2	3	1	2	3	1	2	3	1	2	3	1	2	3	1	2	3	1	2	3	1	2	3	1	2	3	1	2	3
55	B	2:12	9.5	Non-Exposed	42	42	42	42	42	42	42	42	42	42	42	42	42	42	42	42	42	42	42	42	42	42	42	42	42	42	42	42	42	42	42	42	42	42	42	42	42	42	42	42	42	42
				Exposed	42	42	42	42	42	42	42	42	42	42	42	42	42	42	42	42	42	42	42	42	42	42	42	42	42	42	42	42	42	42	42	42	42	42	42	42	42	42	41	42	41	39
		3:12	14.0	Non-Exposed	40	40	40	40	40	40	40	40	40	40	40	40	40	40	40	40	40	40	40	40	40	40	40	40	40	40	40	40	40	40	40	40	40	40	40	40	40	40	40	40	40	40
				Exposed	40	40	40	40	40	40	40	40	40	40	40	40	40	40	40	40	40	40	40	40	40	40	40	40	40	40	40	40	40	40	40	40	40	40	40	40	40	40	40	40	40	39
		4:12	18.4	Non-Exposed	40	40	40	40	40	40	40	40	40	40	40	40	40	40	40	40	40	40	40	40	40	40	40	40	40	40	40	40	40	40	40	40	40	40	40	40	40	40	40	40	40	40
				Exposed	40	40	40	40	40	40	40	40	40	40	40	40	40	40	40	40	40	40	40	40	40	40	40	40	40	40	40	40	40	40	40	40	40	40	40	40	40	40	40	40	40	39
		5:12	22.6	Non-Exposed	41	41		41	41		41	41		41	41		41	41		41	41		41	41		41	41		41	41		41	41		41	41		41	41		41	41		41	41	
				Exposed	41	41		41	41		41	41		41	41		41	41		41	41		41	41		41	41		41	41		41	41		41	41		41	41		41	41		41	41	
		6:12	26.6	Non-Exposed	43	43		43	43		43	43		43	43		43	43		43	43		43	43		43	43		43	43		43	43		43	43		43	43		43	43		43	43	
				Exposed	43	43		43	43		43	43		43	43		43	43		43	43		43	43		43	43		43	43		43	43		43	43		43	43		43	43		43	43	
		7:12	30.3	Non-Exposed	44	44	44	44	44	44	44	44	44	44	44	44	44	44	44	44	44	44	44	44	44	44	44	44	44	44	44	44	44	44	44	44	44	44	44	44	44	44	44	44	44	44
				Exposed	44	44	44	44	44	44	44	44	44	44	44	44	44	44	44	44	44	44	44	44	44	44	44	44	44	44	44	44	44	44	44	44	44	44	44	42	44	42	39	44	39	37
		8:12	33.7	Non-Exposed	46	46	46	46	46	46	46	46	46	46	46	46	46	46	46	46	46	46	46	46	46	46	46	46	46	46	46	46	46	46	46	46	46	46	46	46	46	46	46	46	46	46
				Exposed	46	46	46	46	46	46	46	46	46	46	46	46	46	46	46	46	46	46	46	46	46	46	46	46	46	46	46	46	46	46	46	46	46	46	45	42	46	41	39	46	39	37
		9:12	36.9	Non-Exposed	48	48	48	48	48	48	48	48	48	48	48	48	48	48	48	48	48	48	48	48	48	48	48	48	48	48	48	48	48	48	48	48	48	48	48	48	48	48	48	48	48	48
				Exposed	48	48	48	48	48	48	48	48	48	48	48	48	48	48	48	48	48	48	48	48	48	48	48	48	48	48	48	48	48	46	48	45	42	48	41	39	48	39	36	48	39	36
		10:12	39.8	Non-Exposed	51	51	51	51	51	51	51	51	51	51	51	51	51	51	51	51	51	51	51	51	51	51	51	51	51	51	51	51	51	51	51	51	51	51	51	50	51	51	51	51	50	48
				Exposed	51	51	51	51	51	51	51	51	51	51	51	51	51	51	51	51	51	51	51	51	51	51	51	51	51	51	51	51	51	50	51	48	46	51	44	42	51	41	39	51	39	36
		11:12	42.5	Non-Exposed	53	53	53	53	53	53	53	53	53	53	53	53	53	53	53	53	53	53	53	53	53	53	53	53	53	53	53	53	53	53	53	53	53	53	53	51	53	50	48
				Exposed	53	53	53	53	53	53	53	53	53	53	53	53	53	53	53	53	53	53	53	53	53	53	53	53	53	53	53	53	52	50	53	48	45	53	44	42	53	41	39	53	39	36
		12:12	45	Non-Exposed	56	56	56	56	56	56	56	56	56	56	56	56	56	56	56	56	56	56	56	56	56	56	56	56	56	56	56	56	56	56	56	56	56	56	56	56	56	53	51	55	50	47
				Exposed	56	56	56	56	56	56	56	56	56	56	56	56	56	56	56	56	56	56	56	56	56	56	56	55	56	52	50	56	48	45	56	44	42	56	41	39	53	39	36
	C	2:12	9.5	Non-Exposed	42	42	42	42	42	42	42	42	42	42	42	42	42	42	42	42	42	42	42	42	42	42	42	42	42	42	42	42	42	42	42	42	42	42	42	42	42	42	42	42	42	41
				Exposed	42	42	42	42	42	42	42	42	42	42	42	42	42	42	42	42	42	42	42	42	42	42	42	42	42	42	42	42	42	42	42	41	39	42	39	37	42	36	35	40	34	33
		3:12	14.0	Non-Exposed	40	40	40	40	40	40	40	40	40	40	40	40	40	40	40	40	40	40	40	40	40	40	40	40	40	40	40	40	40	40	40	40	40	40	40	40	40	40	40	40	40	40
				Exposed	40	40	40	40	40	40	40	40	40	40	40	40	40	40	40	40	40	40	40	40	40	40	40	40	40	40	40	40	40	39	40	38	37	40	36	35	40	34	33	40	34	33
		4:12	18.4	Non-Exposed	40	40	40	40	40	40	40	40	40	40	40	40	40	40	40	40	40	40	40	40	40	40	40	40	40	40	40	40	40	40	40	40	40	40	40	40	40	40	40	40	40	40
				Exposed	40	40	40	40	40	40	40	40	40	40	40	40	40	40	40	40	40	40	40	40	40	40	40	40	40	40	40	40	40	39	40	38	37	40	36	35	40	34	33	40	34	33
		5:12	22.6	Non-Exposed	41	41		41	41		41	41		41	41		41	41		41	41		41	41		41	41		41	41		41	41		41	41		41	41		41	41		41	41	
				Exposed	41	41		41	41		41	41		41	41		41	41		41	41		41	41		41	41		41	41		41	41		41	41		41	41		41	40		41	38	
		6:12	26.6	Non-Exposed	43	43		43	43		43	43		43	43		43	43		43	43		43	43		43	43		43	43		43	43		43	43		43	43		43	43		43	43	
				Exposed	43	43		43	43		43	43		43	43		43	43		43	43		43	43		43	43		43	43		43	43		43	42		43	40		43	38				
		7:12	30.3	Non-Exposed	44	44	44	44	44	44	44	44	44	44	44	44	44	44	44	44	44	44	44	44	44	44	44	44	44	44	44	44	44	44	44	44	44	44	44	41	44	41	38			
				Exposed	44	44	44	44	44	44	44	44	44	44	44	44	44	44	44	44	44	44	44	44	44	44	44	44	44	42	40	44	39	37	44	36	34	44	34	32	44	32	0			
		8:12	33.7	Non-Exposed	46	46	46	46	46	46	46	46	46	46	46	46	46	46	46	46	46	46	46	46	46	46	46	46	46	46	46	46	46	46	46	46	44	46	43	41	45	41	38			
				Exposed	46	46	46	46	46	46	46	46	46	46	46	46	46	46	46	46	46	46	46	46	46	46	46	43	46	42	40	46	39	37	46	36	34	46	34	32	44	32	0			
		9:12	36.9	Non-Exposed	48	48	48	48	48	48	48	48	48	48	48	48	48	48	48	48	48	48	48	48	48	48	48	48	48	48	48	48	48	48	48	47	44	47	43	41	47	40	38			
				Exposed	48	48	48	48	48	48	48	48	48	48	48	48	48	48	48	48	48	48	48	48	48	48	46	43	48	42	40	48	39	37	48	36	34	47	34	32	44	32	0			
		10:12	39.8	Non-Exposed	51	51	51	51	51	51	51	51	51	51	51	51	51	51	51	51	51	51	51	51	51	51	51	51	51	51	51	51	50	48	50	46	44	49	43	41	48	40	38			
				Exposed	51	51	51	51	51	51	51	51	51	51	51	51	51	51	51	51	51	51	51	51	51	51	51	48	51	46	43	51	42	40	51	39	37	50	36	34	47	34	32	44	32	0
		11:12	42.5	Non-Exposed	53	53	53	53	53	53	53	53	53	53	53	53	53	53	53	53	53	53	53	53	53	53	53	53	53	53	53	53	52	50	52	46	44	51	43	41	50	40	38			
				Exposed	53	53	53	53	53	53	53	53	53	53	53	53	53	53	53	53	53	53	53	53	51	53	50	48	53	46	43	53	42	40	53	39	37	50	36	34	46	34	32	44	32	0
		12:12	45	Non-Exposed	56	56	56	56	56	56	56	56	56	56	56	56	56	56	56	56	56	56	56	56	56	56	56	56	56	56	56	56	54	52	55	50	48	54	46	44	53	43	41	52	40	38
				Exposed	56	56	56	56	56	56	56	56	56	56	56	56	56	56	56	56	56	54	56	53	51	56	50	48	56	46	43	56	42	40	54	39	36	50	36	34	46	34	32	43	32	0
	D	2:12	9.5	Non-Exposed	42	42	42	42	42	42	42	42	42	42	42	42	42	42	42	42	42	42	42	42	42	42	42	42	42	42	42	42	42	42	42	42	42	42	41	39	41	39	37			
				Exposed	42	42	42	42	42	42	42	42	42	42	42	42	42	42	42	42	42	42	42	42	42	42	42	41	42	40	39	42	38	36	41	35	34	39	33	0	37	0	0			
		3:12	14.0	Non-Exposed	40	40	40	40	40	40	40	40	40	40	40	40	40	40	40	40	40	40	40	40	40	40	40	40	40	40	40	40	40	40	40	40	40	40	40	39	40	39	37			
				Exposed	40	40	40	40	40	40	40	40	40	40	40	40	40	40	40	40	40	40	40	40	40	40	40	40	40	40	39	40	38	36	40	35	34	39	33	0	37	0	0			
		4:12	18.4	Non-Exposed	40	40	40	40	40	40	40	40	40	40	40	40	40	40	40	40	40	40	40	40	40	40	40	40	40	40	40	40	40	40	40	40	40	40	40	39	40	39	37			
				Exposed	40	40	40	40	40	40	40	40	40	40	40	40	40	40	40	40	40	40	40	40	40	40	40	40	40	40	40	40	40	38	40	38	36	40	35	34	39	33	0	36	0	0
		5:12	22.6	Non-Exposed	41	41		41	41		41	41		41	41		41	41		41	41		41	41		41	41		41	41		41	41		41	41		41	41		41	41		41	41	
				Exposed	41	41		41	41		41	41		41	41		41	41		41	41		41	41		41	41		41	41		41	41		41	41		41	39		41	36		41	35	
		6:12	26.6	Non-Exposed	43	43		43	43		43	43		43	43		43	43		43	43		43	43		43	43		43	43		43	43		43	43		43	43		42	42		42	42	
				Exposed	43	43		43	43		43	43		43	43		43	43		43	43		43	43		43	43		43	43		43	43		43	41		43	39		42	36		41	34	
		7:12	30.3	Non-Exposed	44	44	44	44	44	44	44	44	44	44	44	44	44	44	44	44	44	44	44	44	44	44	44	44	44	44	44	44	44	43	44	42	39	43	39	37	43	37	34			
				Exposed	44	44	44	44	44	44	44	44	44	44	44	44	44	44	44	44	44	44	44	44	44	44	44	43	44	41	39	44	38	36	44	35	33	44	33	0	42	0	0	40	0	0
		8:12	33.7	Non-Exposed	46	46	46	46	46	46	46	46	46	46	46	46	46	46	46	46	46	46	46	46	46	46	46	46	46	46	46	46	45	43	46	42	39	45	39	37	44	37	34			
				Exposed	46	46	46	46	46	46	46	46	46	46	46	46	46	46	46	46	46	46	46	46	45	46	45	43	46	41	39	46	38	36	46	35	33	45	33	0	42	0	0	40	0	0
		9:12	36.9	Non-Exposed	48	48	48	48	48	48	48	48	48	48	48	48	48	48	48	48	48	48	48	48	48	48	48	48	48	48	48	48	48	47	48	45	43	47	42	39	46	39	37	45	37	34
				Exposed	48	48	48	48	48	48	48	48	48	48	48	48	48	48	48	48	48	48	48	48	45	48	45	43	48	41	39	48	38	36	48	35	33	45	33	0	42	0	0	40	0	0
		10:12	39.8	Non-Exposed	51	51	51	51	51	51	51	51	51	51	51	51	51	51	51	51	51	51	51	51	51	51	51	51	51	51	51	51	49	46	50	45	42	49	42	39	48	39	37	47	37	34
				Exposed	51	51	51	51	51	51	51	51	51	51	51	51	51	51	51	51	50	48	51	48	45	51	45	43	51	41	39	51	38	36	48	35	33	45	33	0	42	0	0	40	0	0
		11:12	42.5	Non-Exposed	53	53	53	53	53	53	53	53	53	53	53	53	53	53	53	53	53	53	53	53	53	53	53	53	53	53	51	53	49	46	52	45	42	51	42	39	50	39	37	49	37	34
				Exposed	53	53	53	53	53	53	53	53	53	53	53	53	53	53	51	53	50	48	53	48	45	53	45	43	53	41	39	52	38	36	48	35	33	45	33	0	42	0	0	40	0	0
		12:12	45	Non-Exposed	56	56	56	56	56	56	56	56	56	56	56	56	56	56	56	56	56	56	56	56	56	56	56	56	56	53	51	55	49	46	54	45	42	53	42	39	51	39	37	50	37	34
				Exposed	56	56	56	56	56	56	56	56	56	56	56	54	56	53	51	56	50	48	56	48	45	56	45	43	56	41	39	52	38	36	48	35	33	45	33	0	42	0	0	40	0	0

Tamarack 2.3 Rail – Hip Flush-Mount on 30 Foot Maximum Mean Roof Height – Portrait – Panel Length = 68 Inches or Less

Ground Snow Load	Exposure Category	Roof Pitch	Roof Angle	Wind Speed (mph)	95			100			105			110			115			120			125			130			140			150			160			170			180			190		
				Roof Area	1	2	3	1	2	3	1	2	3	1	2	3	1	2	3	1	2	3	1	2	3	1	2	3	1	2	3	1	2	3	1	2	3	1	2	3	1	2	3	1	2	3
60	B	2:12	9.5	Non-Exposed	40	40	40	40	40	40	40	40	40	40	40	40	40	40	40	40	40	40	40	40	40	40	40	40	40	40	40	40	40	40	40	40	40	40	40	40	40	40	40	40	40	40
				Exposed	40	40	40	40	40	40	40	40	40	40	40	40	40	40	40	40	40	40	40	40	40	40	40	40	40	40	40	40	40	40	40	40	40	40	40	40	40	40	40	40	40	39
		3:12	14.0	Non-Exposed	39	39	39	39	39	39	39	39	39	39	39	39	39	39	39	39	39	39	39	39	39	39	39	39	39	39	39	39	39	39	39	39	39	39	39	39	39	39	39	39	39	39
				Exposed	39	39	39	39	39	39	39	39	39	39	39	39	39	39	39	39	39	39	39	39	39	39	39	39	39	39	39	39	39	39	39	39	39	39	39	39	39	39	39	39	39	39
		4:12	18.4	Non-Exposed	39	39	39	39	39	39	39	39	39	39	39	39	39	39	39	39	39	39	39	39	39	39	39	39	39	39	39	39	39	39	39	39	39	39	39	39	39	39	39	39	39	39
				Exposed	39	39	39	39	39	39	39	39	39	39	39	39	39	39	39	39	39	39	39	39	39	39	39	39	39	39	39	39	39	39	39	39	39	39	39	39	39	39	39	39	39	39
		5:12	22.6	Non-Exposed	40	40		40	40		40	40		40	40		40	40		40	40		40	40		40	40		40	40		40	40		40	40		40	40		40	40		40	40	
				Exposed	40	40		40	40		40	40		40	40		40	40		40	40		40	40		40	40		40	40		40	40		40	40		40	40		40	40		40	40	
		6:12	26.6	Non-Exposed	41	41		41	41		41	41		41	41		41	41		41	41		41	41		41	41		41	41		41	41		41	41		41	41		41	41		41	41	
				Exposed	41	41		41	41		41	41		41	41		41	41		41	41		41	41		41	41		41	41		41	41		41	41		41	41		41	41		41	41	
		7:12	30.3	Non-Exposed	42	42	42	42	42	42	42	42	42	42	42	42	42	42	42	42	42	42	42	42	42	42	42	42	42	42	42	42	42	42	42	42	42	42	42	42	42	42	42	42	42	42
				Exposed	42	42	42	42	42	42	42	42	42	42	42	42	42	42	42	42	42	42	42	42	42	42	42	42	42	42	42	42	42	42	42	42	42	42	42	42	42	42	42	42	39	37
		8:12	33.7	Non-Exposed	44	44	44	44	44	44	44	44	44	44	44	44	44	44	44	44	44	44	44	44	44	44	44	44	44	44	44	44	44	44	44	44	44	44	44	44	44	44	44	44	44	44
				Exposed	44	44	44	44	44	44	44	44	44	44	44	44	44	44	44	44	44	44	44	44	44	44	44	44	44	44	44	44	44	44	44	44	44	44	44	42	44	41	39	44	39	37
		9:12	36.9	Non-Exposed	46	46	46	46	46	46	46	46	46	46	46	46	46	46	46	46	46	46	46	46	46	46	46	46	46	46	46	46	46	46	46	46	46	46	46	46	46	46	46	46	46	46
				Exposed	46	46	46	46	46	46	46	46	46	46	46	46	46	46	46	46	46	46	46	46	46	46	46	46	46	46	46	46	46	46	46	45	42	46	41	39	46	39	36	46	36	34
		10:12	39.8	Non-Exposed	49	49	49	49	49	49	49	49	49	49	49	49	49	49	49	49	49	49	49	49	49	49	49	49	49	49	49	49	49	49	49	49	49	49	49	49	49	49	49	49	48	48
				Exposed	49	49	49	49	49	49	49	49	49	49	49	49	49	49	49	49	49	49	49	49	49	49	49	49	49	49	49	49	49	49	49	48	42	49	41	39	49	39	36	49	36	34
		11:12	42.5	Non-Exposed	51	51	51	51	51	51	51	51	51	51	51	51	51	51	51	51	51	51	51	51	51	51	51	51	51	51	51	51	51	51	51	50	48	51	46	44	50	43	41	49	40	38
				Exposed	51	51	51	51	51	51	51	51	51	51	51	51	51	51	51	51	51	51	51	51	51	51	50	48	51	46	43	51	42	40	51	39	37	50	36	34	46	34	32	44	32	0
		12:12	45	Non-Exposed	54	54	54	54	54	54	54	54	54	54	54	54	54	54	54	54	54	54	54	54	54	54	54	54	54	54	54	54	54	52	53	50	48	53	46	44	52	43	41	51	40	38
				Exposed	54	54	54	54	54	54	54	54	54	54	54	54	54	54	54	54	54	54	54	53	51	54	50	48	54	46	43	54	42	40	53	39	36	50	36	34	46	34	32	43	32	0
	C	2:12	9.5	Non-Exposed	40	40	40	40	40	40	40	40	40	40	40	40	40	40	40	40	40	40	40	40	40	40	40	40	40	40	40	40	40	40	40	40	40	40	40	40	40	40	40	40	40	40
				Exposed	40	40	40	40	40	40	40	40	40	40	40	40	40	40	40	40	40	40	40	40	40	40	40	40	40	40	40	40	40	40	40	40	39	40	39	37	40	36	35	40	34	33
		3:12	14.0	Non-Exposed	39	39	39	39	39	39	39	39	39	39	39	39	39	39	39	39	39	39	39	39	39	39	39	39	39	39	39	39	39	39	39	39	39	39	39	39	39	39	39	39	39	39
				Exposed	39	39	39	39	39	39	39	39	39	39	39	39	39	39	39	39	39	39	39	39	39	39	39	39	39	39	39	39	39	39	39	39	39	39	38	37	39	36	35	39	34	33
		4:12	18.4	Non-Exposed	39	39	39	39	39	39	39	39	39	39	39	39	39	39	39	39	39	39	39	39	39	39	39	39	39	39	39	39	39	39	39	39	39	39	39	39	39	39	39	39	39	39
				Exposed	39	39	39	39	39	39	39	39	39	39	39	39	39	39	39	39	39	39	39	39	39	39	39	39	39	39	39	39	39	39	39	39	39	39	38	37	39	36	35	39	34	33
		5:12	22.6	Non-Exposed	40	40		40	40		40	40		40	40		40	40		40	40		40	40		40	40		40	40		40	40		40	40		40	40		40	40		40	40	
				Exposed	40	40		40	40		40	40		40	40		40	40		40	40		40	40		40	40		40	40		40	40		40	40		40	40		40	40		40	38	
		6:12	26.6	Non-Exposed	41	41		41	41		41	41		41	41		41	41		41	41		41	41		41	41		41	41		41	41		41	41		41	41		41	41		41	41	
				Exposed	41	41		41	41		41	41		41	41		41	41		41	41		41	41		41	41		41	41		41	41		41	41		41	41		41	40		41	38	
60		7:12	30.3	Non-Exposed	42	42	42	42	42	42	42	42	42	42	42	42	42	42	42	42	42	42	42	42	42	42	42	42	42	42	42	42	42	42	42	42	42	42	42	42	42	42	41	42	41	38
				Exposed	42	42	42	42	42	42	42	42	42	42	42	42	42	42	42	42	42	42	42	42	42	42	42	42	42	42	42	42	42	40	42	39	37	42	36	34	42	34	32	42	32	0
		8:12	33.7	Non-Exposed	44	44	44	44	44	44	44	44	44	44	44	44	44	44	44	44	44	44	44	44	44	44	44	44	44	44	44	44	44	44	44	44	44	44	43	41	44	41	38	44	41	38
				Exposed	44	44	44	44	44	44	44	44	44	44	44	44	44	44	44	44	44	44	44	44	44	44	44	43	44	42	40	44	39	37	44	36	34	44	34	32	44	32	0	44	32	0
		9:12	36.9	Non-Exposed	46	46	46	46	46	46	46	46	46	46	46	46	46	46	46	46	46	46	46	46	46	46	46	46	46	46	46	46	46	44	46	43	41	45	40	38	45	40	38	45	40	38
				Exposed	46	46	46	46	46	46	46	46	46	46	46	46	46	46	46	46	46	46	46	46	46	46	46	43	46	42	40	46	39	37	46	36	34	46	34	32	44	32	0	44	32	0
		10:12	39.8	Non-Exposed	49	49	49	49	49	49	49	49	49	49	49	49	49	49	49	49	49	49	49	49	49	49	49	49	49	49	49	49	49	48	49	46	44	48	43	41	47	40	38	47	40	38
				Exposed	49	49	49	49	49	49	49	49	49	49	49	49	49	49	49	49	49	49	49	49	49	49	49	48	49	46	43	49	42	40	49	39	37	49	36	34	47	34	32	44	32	0
		11:12	42.5	Non-Exposed	51	51	51	51	51	51	51	51	51	51	51	51	51	51	51	51	51	51	51	51	51	51	51	51	51	51	51	51	51	51	51	50	48	51	46	44	50	43	41	49	40	38
				Exposed	51	51	51	51	51	51	51	51	51	51	51	51	51	51	51	51	51	51	51	51	51	51	50	48	51	46	43	51	42	40	51	39	37	50	36	34	46	34	32	44	32	0
		12:12	45	Non-Exposed	54	54	54	54	54	54	54	54	54	54	54	54	54	54	54	54	54	54	54	54	54	54	54	54	54	54	54	54	54	52	53	50	48	53	46	44	52	43	41	51	40	38
				Exposed	54	54	54	54	54	54	54	54	54	54	54	54	54	54	54	54	54	54	54	53	51	54	50	48	54	46	43	54	42	40	53	39	36	50	36	34	46	34	32	43	32	0
	D	2:12	9.5	Non-Exposed	40	40	40	40	40	40	40	40	40	40	40	40	40	40	40	40	40	40	40	40	40	40	40	40	40	40	40	40	40	40	40	40	39	40	40	40	40	40	39	40	39	37
				Exposed	40	40	40	40	40	40	40	40	40	40	40	40	40	40	40	40	40	40	40	40	40	40	40	40	40	40	40	40	40	39	40	38	36	40	35	34	39	33	0	37	0	0
		3:12	14.0	Non-Exposed	39	39	39	39	39	39	39	39	39	39	39	39	39	39	39	39	39	39	39	39	39	39	39	39	39	39	39	39	39	39	39	39	39	39	39	39	39	39	39	39	39	37
				Exposed	39	39	39	39	39	39	39	39	39	39	39	39	39	39	39	39	39	39	39	39	39	39	39	39	39	39	39	39	39	39	39	38	36	39	35	34	39	33	0	37	0	0
		4:12	18.4	Non-Exposed	39	39	39	39	39	39	39	39	39	39	39	39	39	39	39	39	39	39	39	39	39	39	39	39	39	39	39	39	39	39	39	39	39	39	39	39	39	39	39	39	39	37
				Exposed	39	39	39	39	39	39	39	39	39	39	39	39	39	39	39	39	39	39	39	39	39	39	39	39	39	39	39	39	39	38	39	38	36	39	35	34	39	33	0	36	0	0
		5:12	22.6	Non-Exposed	40	40		40	40		40	40		40	40		40	40		40	40		40	40		40	40		40	40		40	40		40	40		40	40		40	40		40	40	
				Exposed	40	40		40	40		40	40		40	40		40	40		40	40		40	40		40	40		40	40		40	40		40	40		40	39		40	36		40	35	
		6:12	26.6	Non-Exposed	41	41		41	41		41	41		41	41		41	41		41	41		41	41		41	41		41	41		41	41		41	41		41	41		41	41		40	40	
				Exposed	41	41		41	41		41	41		41	41		41	41		41	41		41	41		41	41		41	41		41	41		41	41		41	39		41	36		40	34	
		7:12	30.3	Non-Exposed	42	42	42	42	42	42	42	42	42	42	42	42	42	42	42	42	42	42	42	42	42	42	42	42	42	42	42	42	42	42	42	42	42	42	42	39	42	39	37	41	37	34
				Exposed	42	42	42	42	42	42	42	42	42	42	42	42	42	42	42	42	42	42	42	42	42	42	42	42	42	41	39	42	38	36	42	35	33	42	33	0	42	0	0	40	0	0
		8:12	33.7	Non-Exposed	44	44	44	44	44	44	44	44	44	44	44	44	44	44	44	44	44	44	44	44	44	44	44	44	44	44	44	44	44	44	44	44	43	44	42	39	43	39	37	43	37	34
				Exposed	44	44	44	44	44	44	44	44	44	44	44	44	44	44	44	44	44	44	44	44	44	44	44	43	44	41	39	44	38	36	44	35	33	44	33	0	42	0	0	40	0	0
		9:12	36.9	Non-Exposed	46	46	46	46	46	46	46	46	46	46	46	46	46	46	46	46	46	46	46	46	46	46	46	46	46	46	46	46	46	46	46	45	43	46	42	39	45	39	37	44	37	34
				Exposed	46	46	46	46	46	46	46	46	46	46	46	46	46	46	46	46	46	46	46	46	45	46	45	43	46	41	39	46	38	36	46	35	33	45	33	0	42	0	0	40	0	0
		10:12	39.8	Non-Exposed	49	49	49	49	49	49	49	49	49	49	49	49	49	49	49	49	49	49	49	49	49	49	49	49	49	49	49	49	49	46	48	45	42	47	42	39	47	39	37	46	37	34
				Exposed	49	49	49	49	49	49	49	49	49	49	49	49	49	49	49	49	49	48	49	48	45	49	45	43	49	41	39	49	38	36	48	35	33	45	33	0	42	0	0	40	0	0
		11:12	42.5	Non-Exposed	51	51	51	51	51	51	51	51	51	51	51	51	51	51	51	51	51	51	51	51	51	51	51	51	51	51	51	51	49	46	50	45	42	49	42	39	48	39	37	47	37	34
				Exposed	51	51	51	51	51	51	51	51	51	51	51	51	51	51	51	51	50	48	51	48	45	51	45	43	51	41	39	51	38	36	48	35	33	45	33	0	42	0	0	40	0	0
		12:12	45	Non-Exposed	54	54	54	54	54	54	54	54	54	54	54	54	54	54	54	54	54	54	54	54	54	54	54	54	54	53	51	53	49	46	52	45	42	51	42	39	50	39	37	49	37	34
				Exposed	54	54	54	54	54	54	54	54	54	54	54	54	54	53	51	54	50	48	54	48	45	54	45	43	54	41	39	52	38	36	48	35	33	45	33	0	42	0	0	40	0	0

Tamarack 2.3 Rail – Hip Flush-Mount on 30 Foot Maximum Mean Roof Height – Portrait – Panel Length = 68 Inches or Less

Ground Snow Load	Exposure Category	Roof Pitch	Roof Angle	Wind Speed (mph)	95			100			105			110			115			120			125			130			140			150			160			170			180			190		
				Roof Area	1	2	3	1	2	3	1	2	3	1	2	3	1	2	3	1	2	3	1	2	3	1	2	3	1	2	3	1	2	3	1	2	3	1	2	3	1	2	3	1	2	3
70	B	2:12	9.5	Non-Exposed	37	37	37	37	37	37	37	37	37	37	37	37	37	37	37	37	37	37	37	37	37	37	37	37	37	37	37	37	37	37	37	37	37	37	37	37	37	37	37	37	37	37
				Exposed	37	37	37	37	37	37	37	37	37	37	37	37	37	37	37	37	37	37	37	37	37	37	37	37	37	37	37	37	37	37	37	37	37	37	37	37	37	37	37	37	37	37
		3:12	14.0	Non-Exposed	36	36	36	36	36	36	36	36	36	36	36	36	36	36	36	36	36	36	36	36	36	36	36	36	36	36	36	36	36	36	36	36	36	36	36	36	36	36	36	36	36	36
				Exposed	36	36	36	36	36	36	36	36	36	36	36	36	36	36	36	36	36	36	36	36	36	36	36	36	36	36	36	36	36	36	36	36	36	36	36	36	36	36	36	36	36	36
		4:12	18.4	Non-Exposed	36	36	36	36	36	36	36	36	36	36	36	36	36	36	36	36	36	36	36	36	36	36	36	36	36	36	36	36	36	36	36	36	36	36	36	36	36	36	36	36	36	36
				Exposed	36	36	36	36	36	36	36	36	36	36	36	36	36	36	36	36	36	36	36	36	36	36	36	36	36	36	36	36	36	36	36	36	36	36	36	36	36	36	36	36	36	36
		5:12	22.6	Non-Exposed	37	37		37	37		37	37		37	37		37	37		37	37		37	37		37	37		37	37		37	37		37	37		37	37		37	37		37	37	
				Exposed	37	37		37	37		37	37		37	37		37	37		37	37		37	37		37	37		37	37		37	37		37	37		37	37		37	37		37	37	
		6:12	26.6	Non-Exposed	38	38		38	38		38	38		38	38		38	38		38	38		38	38		38	38		38	38		38	38		38	38		38	38		38	38		38	38	
				Exposed	38	38		38	38		38	38		38	38		38	38		38	38		38	38		38	38		38	38		38	38		38	38		38	38		38	38		38	38	
		7:12	30.3	Non-Exposed	39	39	39	39	39	39	39	39	39	39	39	39	39	39	39	39	39	39	39	39	39	39	39	39	39	39	39	39	39	39	39	39	39	39	39	39	39	39	39	39	39	39
				Exposed	39	39	39	39	39	39	39	39	39	39	39	39	39	39	39	39	39	39	39	39	39	39	39	39	39	39	39	39	39	39	39	39	39	39	39	39	39	39	39	39	39	37
		8:12	33.7	Non-Exposed	41	41	41	41	41	41	41	41	41	41	41	41	41	41	41	41	41	41	41	41	41	41	41	41	41	41	41	41	41	41	41	41	41	41	41	41	41	41	41	41	41	41
				Exposed	41	41	41	41	41	41	41	41	41	41	41	41	41	41	41	41	41	41	41	41	41	41	41	41	41	41	41	41	41	41	41	41	41	41	41	41	41	41	39	41	39	37
		9:12	36.9	Non-Exposed	43	43	43	43	43	43	43	43	43	43	43	43	43	43	43	43	43	43	43	43	43	43	43	43	43	43	43	43	43	43	43	43	43	43	43	43	43	43	43	43	43	43
				Exposed	43	43	43	43	43	43	43	43	43	43	43	43	43	43	43	43	43	43	43	43	43	43	43	43	43	43	43	43	43	43	43	43	43	43	43	42	43	41	39	43	39	36
		10:12	39.8	Non-Exposed	45	45	45	45	45	45	45	45	45	45	45	45	45	45	45	45	45	45	45	45	45	45	45	45	45	45	45	45	45	45	45	45	45	45	45	45	45	45	45	45	45	45
				Exposed	45	45	45	45	45	45	45	45	45	45	45	45	45	45	45	45	45	45	45	45	45	45	45	45	45	45	45	45	45	45	45	44	42	45	41	39	45	39	36	45	39	36
		11:12	42.5	Non-Exposed	48	48	48	48	48	48	48	48	48	48	48	48	48	48	48	48	48	48	48	48	48	48	48	48	48	48	48	48	48	48	48	48	48	48	48	48	48	48	48	48	48	48
				Exposed	48	48	48	48	48	48	48	48	48	48	48	48	48	48	48	48	48	48	48	48	48	48	48	48	48	48	48	48	48	45	48	44	42	48	41	39	48	39	36	48	39	36
		12:12	45	Non-Exposed	51	51	51	51	51	51	51	51	51	51	51	51	51	51	51	51	51	51	51	51	51	51	51	51	51	51	51	51	51	51	51	51	51	51	51	51	51	51	50	51	50	47
				Exposed	51	51	51	51	51	51	51	51	51	51	51	51	51	51	51	51	51	51	51	51	51	51	51	51	51	51	51	51	51	50	51	48	45	51	44	42	51	41	39	51	39	36
	C	2:12	9.5	Non-Exposed	37	37	37	37	37	37	37	37	37	37	37	37	37	37	37	37	37	37	37	37	37	37	37	37	37	37	37	37	37	37	37	37	37	37	37	37	37	37	37	37	37	37
				Exposed	37	37	37	37	37	37	37	37	37	37	37	37	37	37	37	37	37	37	37	37	37	37	37	37	37	37	37	37	37	37	37	37	37	37	36	35	37	34	33	37	34	33
		3:12	14.0	Non-Exposed	36	36	36	36	36	36	36	36	36	36	36	36	36	36	36	36	36	36	36	36	36	36	36	36	36	36	36	36	36	36	36	36	36	36	36	36	36	36	36	36	36	36
				Exposed	36	36	36	36	36	36	36	36	36	36	36	36	36	36	36	36	36	36	36	36	36	36	36	36	36	36	36	36	36	36	36	36	36	36	36	35	36	34	33	36	34	33
		4:12	18.4	Non-Exposed	36	36	36	36	36	36	36	36	36	36	36	36	36	36	36	36	36	36	36	36	36	36	36	36	36	36	36	36	36	36	36	36	36	36	36	36	36	36	36	36	36	36
				Exposed	36	36	36	36	36	36	36	36	36	36	36	36	36	36	36	36	36	36	36	36	36	36	36	36	36	36	36	36	36	36	36	36	36	36	36	35	36	34	33	36	34	33
		5:12	22.6	Non-Exposed	37	37		37	37		37	37		37	37		37	37		37	37		37	37		37	37		37	37		37	37		37	37		37	37		37	37		37	37	
				Exposed	37	37		37	37		37	37		37	37		37	37		37	37		37	37		37	37		37	37		37	37		37	37		37	37		37	37		37	37	
		6:12	26.6	Non-Exposed	38	38		38	38		38	38		38	38		38	38		38	38		38	38		38	38		38	38		38	38		38	38		38	38		38	38		38	38	
				Exposed	38	38		38	38		38	38		38	38		38	38		38	38		38	38		38	38		38	38		38	38		38	38		38	38		38	38		38	38	
		7:12	30.3	Non-Exposed	39	39	39	39	39	39	39	39	39	39	39	39	39	39	39	39	39	39	39	39	39	39	39	39	39	39	39	39	39	39	39	39	39	39	39	39	39	39	38	39	39	38
				Exposed	39	39	39	39	39	39	39	39	39	39	39	39	39	39	39	39	39	39	39	39	39	39	39	39	39	39	39	39	39	37	39	36	34	39	34	32	39	32	0	39	32	0
		8:12	33.7	Non-Exposed	41	41	41	41	41	41	41	41	41	41	41	41	41	41	41	41	41	41	41	41	41	41	41	41	41	41	41	41	41	41	41	41	41	41	41	41	41	41	38	41	41	38
				Exposed	41	41	41	41	41	41	41	41	41	41	41	41	41	41	41	41	41	41	41	41	41	41	41	41	41	41	41	41	41	40	41	39	37	41	36	34	41	34	32	41	32	0
		9:12	36.9	Non-Exposed	43	43	43	43	43	43	43	43	43	43	43	43	43	43	43	43	43	43	43	43	43	43	43	43	43	43	43	43	43	43	43	43	43	43	43	43	43	41	43	40	38
				Exposed	43	43	43	43	43	43	43	43	43	43	43	43	43	43	43	43	43	43	43	43	43	43	43	43	43	43	43	43	42	40	43	39	37	43	36	34	43	34	32	43	32	0
		10:12	39.8	Non-Exposed	45	45	45	45	45	45	45	45	45	45	45	45	45	45	45	45	45	45	45	45	45	45	45	45	45	45	45	45	45	44	45	43	41	45	40	38	45	40	38	45	40	38
				Exposed	45	45	45	45	45	45	45	45	45	45	45	45	45	45	45	45	45	45	45	45	45	45	45	45	45	45	43	45	42	40	45	39	37	45	36	34	45	34	32	44	32	0
		11:12	42.5	Non-Exposed	48	48	48	48	48	48	48	48	48	48	48	48	48	48	48	48	48	48	48	48	48	48	48	48	48	48	48	48	48	48	48	48	48	48	46	44	47	43	41	46	40	38
				Exposed	48	48	48	48	48	48	48	48	48	48	48	48	48	48	48	48	48	48	48	48	48	48	48	48	48	46	43	48	42	40	48	39	37	48	36	34	46	34	32	44	32	0
		12:12	45	Non-Exposed	51	51	51	51	51	51	51	51	51	51	51	51	51	51	51	51	51	51	51	51	51	51	51	51	51	51	51	51	51	51	51	50	48	50	46	44	49	43	41	48	40	38
				Exposed	51	51	51	51	51	51	51	51	51	51	51	51	51	51	51	51	51	51	51	51	51	51	50	48	51	46	43	51	42	40	51	39	36	50	36	34	46	34	32	43	32	0
	D	2:12	9.5	Non-Exposed	37	37	37	37	37	37	37	37	37	37	37	37	37	37	37	37	37	37	37	37	37	37	37	37	37	37	37	37	37	37	37	37	37	37	37	37	37	37	37	37	37	37
				Exposed	37	37	37	37	37	37	37	37	37	37	37	37	37	37	37	37	37	37	37	37	37	37	37	37	37	37	37	37	37	37	37	37	36	37	35	34	37	33	0	37	0	0
		3:12	14.0	Non-Exposed	36	36	36	36	36	36	36	36	36	36	36	36	36	36	36	36	36	36	36	36	36	36	36	36	36	36	36	36	36	36	36	36	36	36	36	36	36	36	36	36	36	36
				Exposed	36	36	36	36	36	36	36	36	36	36	36	36	36	36	36	36	36	36	36	36	36	36	36	36	36	36	36	36	36	36	36	36	36	36	35	34	36	33	0	36	0	0
		4:12	18.4	Non-Exposed	36	36	36	36	36	36	36	36	36	36	36	36	36	36	36	36	36	36	36	36	36	36	36	36	36	36	36	36	36	36	36	36	36	36	36	36	36	36	36	36	36	36
				Exposed	36	36	36	36	36	36	36	36	36	36	36	36	36	36	36	36	36	36	36	36	36	36	36	36	36	36	36	36	36	36	36	36	36	36	35	34	36	33	0	36	0	0
		5:12	22.6	Non-Exposed	37	37		37	37		37	37		37	37		37	37		37	37		37	37		37	37		37	37		37	37		37	37		37	37		37	37		37	37	
				Exposed	37	37		37	37		37	37		37	37		37	37		37	37		37	37		37	37		37	37		37	37		37	37		37	37		37	36		37	35	
		6:12	26.6	Non-Exposed	38	38		38	38		38	38		38	38		38	38		38	38		38	38		38	38		38	38		38	38		38	38		38	38		38	38		38	38	
				Exposed	38	38		38	38		38	38		38	38		38	38		38	38		38	38		38	38		38	38		38	38		38	38		38	38		38	36		38	34	
		7:12	30.3	Non-Exposed	39	39	39	39	39	39	39	39	39	39	39	39	39	39	39	39	39	39	39	39	39	39	39	39	39	39	39	39	39	39	39	39	39	39	39	39	39	39	37	39	37	34
				Exposed	39	39	39	39	39	39	39	39	39	39	39	39	39	39	39	39	39	39	39	39	39	39	39	39	39	39	39	39	38	36	39	35	33	39	33	0	39	0	0	39	0	0
		8:12	33.7	Non-Exposed	41	41	41	41	41	41	41	41	41	41	41	41	41	41	41	41	41	41	41	41	41	41	41	41	41	41	41	41	41	41	41	41	41	41	41	39	41	39	37	41	37	34
				Exposed	41	41	41	41	41	41	41	41	41	41	41	41	41	41	41	41	41	41	41	41	41	41	41	41	41	41	41	41	38	36	41	35	33	41	33	0	41	0	0	40	0	0
		9:12	36.9	Non-Exposed	43	43	43	43	43	43	43	43	43	43	43	43	43	43	43	43	43	43	43	43	43	43	43	43	43	43	43	43	43	43	43	43	43	43	42	39	43	39	37	42	37	34
				Exposed	43	43	43	43	43	43	43	43	43	43	43	43	43	43	43	43	43	43	43	43	43	43	43	43	43	41	39	43	38	36	43	35	33	43	33	0	42	0	0	40	0	0
		10:12	39.8	Non-Exposed	45	45	45	45	45	45	45	45	45	45	45	45	45	45	45	45	45	45	45	45	45	45	45	45	45	45	45	45	45	45	45	45	42	45	42	39	44	39	37	43	37	34
				Exposed	45	45	45	45	45	45	45	45	45	45	45	45	45	45	45	45	45	45	45	45	45	45	45	45	45	41	39	45	38	36	45	35	33	45	33	0	42	0	0	40	0	0
		11:12	42.5	Non-Exposed	48	48	48	48	48	48	48	48	48	48	48	48	48	48	48	48	48	48	48	48	48	48	48	48	48	48	48	48	48	46	48	45	42	47	42	39	46	39	37	45	37	34
				Exposed	48	48	48	48	48	48	48	48	48	48	48	48	48	48	48	48	48	48	48	48	45	48	45	43	48	41	39	48	38	36	48	35	33	45	33	0	42	0	0	40	0	0
		12:12	45	Non-Exposed	51	51	51	51	51	51	51	51	51	51	51	51	51	51	51	51	51	51	51	51	51	51	51	51	51	51	51	50	49	46	50	45	42	49	42	39	48	39	37	47	37	34
				Exposed	51	51	51	51	51	51	51	51	51	51	51	51	51	51	51	51	50	48	51	48	45	51	45	43	51	41	39	50	38	36	48	35	33	45	33	0	42	0	0	40	0	0

Tamarack 2.3 Rail – Hip Flush-Mount on 30 Foot Maximum Mean Roof Height – Portrait – Panel Length = 68 Inches or Less

Ground Snow Load	Exposure Category	Roof Pitch	Roof Angle	Wind Speed (mph)	95			100			105			110			115			120			125			130			140			150			160			170			180			190		
				Roof Area	1	2	3	1	2	3	1	2	3	1	2	3	1	2	3	1	2	3	1	2	3	1	2	3	1	2	3	1	2	3	1	2	3	1	2	3	1	2	3	1	2	3
80	B	2:12	9.5	Non-Exposed	35	35	35	35	35	35	35	35	35	35	35	35	35	35	35	35	35	35	35	35	35	35	35	35	35	35	35	35	35	35	35	35	35	35	35	35	35	35	35	35	35	35
				Exposed	35	35	35	35	35	35	35	35	35	35	35	35	35	35	35	35	35	35	35	35	35	35	35	35	35	35	35	35	35	35	35	35	35	35	35	35	35	35	35	35	35	35
		3:12	14.0	Non-Exposed	34	34	34	34	34	34	34	34	34	34	34	34	34	34	34	34	34	34	34	34	34	34	34	34	34	34	34	34	34	34	34	34	34	34	34	34	34	34	34	34	34	34
				Exposed	34	34	34	34	34	34	34	34	34	34	34	34	34	34	34	34	34	34	34	34	34	34	34	34	34	34	34	34	34	34	34	34	34	34	34	34	34	34	34	34	34	34
		4:12	18.4	Non-Exposed	34	34	34	34	34	34	34	34	34	34	34	34	34	34	34	34	34	34	34	34	34	34	34	34	34	34	34	34	34	34	34	34	34	34	34	34	34	34	34	34	34	34
				Exposed	34	34	34	34	34	34	34	34	34	34	34	34	34	34	34	34	34	34	34	34	34	34	34	34	34	34	34	34	34	34	34	34	34	34	34	34	34	34	34	34	34	34
		5:12	22.6	Non-Exposed	34	34		34	34		34	34		34	34		34	34		34	34		34	34		34	34		34	34		34	34		34	34		34	34		34	34		34	34	
				Exposed	34	34		34	34		34	34		34	34		34	34		34	34		34	34		34	34		34	34		34	34		34	34		34	34		34	34		34	34	
		6:12	26.6	Non-Exposed	35	35		35	35		35	35		35	35		35	35		35	35		35	35		35	35		35	35		35	35		35	35		35	35		35	35		35	35	
				Exposed	35	35		35	35		35	35		35	35		35	35		35	35		35	35		35	35		35	35		35	35		35	35		35	35		35	35		35	35	
		7:12	30.3	Non-Exposed	37	37	37	37	37	37	37	37	37	37	37	37	37	37	37	37	37	37	37	37	37	37	37	37	37	37	37	37	37	37	37	37	37	37	37	37	37	37	37	37	37	37
				Exposed	37	37	37	37	37	37	37	37	37	37	37	37	37	37	37	37	37	37	37	37	37	37	37	37	37	37	37	37	37	37	37	37	37	37	37	37	37	37	37	37	37	37
		8:12	33.7	Non-Exposed	39	39	39	39	39	39	39	39	39	39	39	39	39	39	39	39	39	39	39	39	39	39	39	39	39	39	39	39	39	39	39	39	39	39	39	39	39	39	39	39	39	39
				Exposed	39	39	39	39	39	39	39	39	39	39	39	39	39	39	39	39	39	39	39	39	39	39	39	39	39	39	39	39	39	39	39	39	39	39	39	39	39	39	39	39	39	37
		9:12	36.9	Non-Exposed	40	40	40	40	40	40	40	40	40	40	40	40	40	40	40	40	40	40	40	40	40	40	40	40	40	40	40	40	40	40	40	40	40	40	40	40	40	40	40	40	40	40
				Exposed	40	40	40	40	40	40	40	40	40	40	40	40	40	40	40	40	40	40	40	40	40	40	40	40	40	40	40	40	40	40	40	40	40	40	40	40	40	40	40	40	40	36
		10:12	39.8	Non-Exposed	43	43	43	43	43	43	43	43	43	43	43	43	43	43	43	43	43	43	43	43	43	43	43	43	43	43	43	43	43	43	43	43	43	43	43	43	43	43	43	43	43	43
				Exposed	43	43	43	43	43	43	43	43	43	43	43	43	43	43	43	43	43	43	43	43	43	43	43	43	43	43	43	43	43	42	43	43	43	43	43	42	43	41	39	43	39	36
		11:12	42.5	Non-Exposed	45	45	45	45	45	45	45	45	45	45	45	45	45	45	45	45	45	45	45	45	45	45	45	45	45	45	45	45	45	45	45	45	45	45	45	45	45	45	45	45	45	36
				Exposed	45	45	45	45	45	45	45	45	45	45	45	45	45	45	45	45	45	45	45	45	45	45	45	45	45	45	45	45	45	45	45	45	45	45	45	45	45	45	45	45	45	36
		12:12	45	Non-Exposed	48	48	48	48	48	48	48	48	48	48	48	48	48	48	48	48	48	48	48	48	48	48	48	48	48	48	48	48	48	48	48	48	48	48	46	44	47	43	41	46	40	38
				Exposed	48	48	48	48	48	48	48	48	48	48	48	48	48	48	48	48	48	48	48	48	48	48	48	48	48	46	43	48	42	40	48	39	36	48	36	34	46	34	32	43	32	0
	C	2:12	9.5	Non-Exposed	35	35	35	35	35	35	35	35	35	35	35	35	35	35	35	35	35	35	35	35	35	35	35	35	35	35	35	35	35	35	35	35	35	35	35	35	35	35	35	35	35	35
				Exposed	35	35	35	35	35	35	35	35	35	35	35	35	35	35	35	35	35	35	35	35	35	35	35	35	35	35	35	35	35	35	35	35	35	35	35	35	35	35	34	35	34	33
		3:12	14.0	Non-Exposed	34	34	34	34	34	34	34	34	34	34	34	34	34	34	34	34	34	34	34	34	34	34	34	34	34	34	34	34	34	34	34	34	34	34	34	34	34	34	34	34	34	34
				Exposed	34	34	34	34	34	34	34	34	34	34	34	34	34	34	34	34	34	34	34	34	34	34	34	34	34	34	34	34	34	34	34	34	34	34	34	34	34	34	34	34	34	33
		4:12	18.4	Non-Exposed	34	34	34	34	34	34	34	34	34	34	34	34	34	34	34	34	34	34	34	34	34	34	34	34	34	34	34	34	34	34	34	34	34	34	34	34	34	34	34	34	34	34
				Exposed	34	34	34	34	34	34	34	34	34	34	34	34	34	34	34	34	34	34	34	34	34	34	34	34	34	34	34	34	34	34	34	34	34	34	34	34	34	34	34	34	34	33
		5:12	22.6	Non-Exposed	34	34		34	34		34	34		34	34		34	34		34	34		34	34		34	34		34	34		34	34		34	34		34	34		34	34		34	34	
				Exposed	34	34		34	34		34	34		34	34		34	34		34	34		34	34		34	34		34	34		34	34		34	34		34	34		34	34		34	34	
		6:12	26.6	Non-Exposed	35	35		35	35		35	35		35	35		35	35		35	35		35	35		35	35		35	35		35	35		35	35		35	35		35	35		35	35	
				Exposed	35	35		35	35		35	35		35	35		35	35		35	35		35	35		35	35		35	35		35	35		35	35		35	35		35	35		35	35	
		7:12	30.3	Non-Exposed	37	37	37	37	37	37	37	37	37	37	37	37	37	37	37	37	37	37	37	37	37	37	37	37	37	37	37	37	37	37	37	37	37	37	37	37	37	37	37	37	37	37
				Exposed	37	37	37	37	37	37	37	37	37	37	37	37	37	37	37	37	37	37	37	37	37	37	37	37	37	37	37	37	37	37	37	37	37	37	36	34	37	34	32	37	32	0
		8:12	33.7	Non-Exposed	39	39	39	39	39	39	39	39	39	39	39	39	39	39	39	39	39	39	39	39	39	39	39	39	39	39	39	39	39	39	39	39	39	39	39	38	39	39	39	39	39	38
				Exposed	39	39	39	39	39	39	39	39	39	39	39	39	39	39	39	39	39	39	39	39	39	39	39	39	39	39	39	39	39	37	39	36	34	39	34	32	39	32	0	39	32	0
		9:12	36.9	Non-Exposed	40	40	40	40	40	40	40	40	40	40	40	40	40	40	40	40	40	40	40	40	40	40	40	40	40	40	40	40	40	40	40	40	40	40	40	38	40	40	40	40	40	38
				Exposed	40	40	40	40	40	40	40	40	40	40	40	40	40	40	40	40	40	40	40	40	40	40	40	40	40	40	40	40	40	39	37	40	36	34	40	34	32	40	32	0	40	32	0
		10:12	39.8	Non-Exposed	43	43	43	43	43	43	43	43	43	43	43	43	43	43	43	43	43	43	43	43	43	43	43	43	43	43	43	43	43	43	43	43	43	43	43	38	43	43	41	43	40	38
				Exposed	43	43	43	43	43	43	43	43	43	43	43	43	43	43	43	43	43	43	43	43	43	43	43	43	43	43	43	43	42	40	43	39	37	43	36	34	43	34	32	43	32	0
		11:12	42.5	Non-Exposed	45	45	45	45	45	45	45	45	45	45	45	45	45	45	45	45	45	45	45	45	45	45	45	45	45	45	45	45	45	45	45	45	45	45	45	38	45	43	41	44	40	38
				Exposed	45	45	45	45	45	45	45	45	45	45	45	45	45	45	45	45	45	45	45	45	45	45	45	45	45	45	43	45	42	40	45	39	37	45	36	34	45	34	32	44	32	0
		12:12	45	Non-Exposed	48	48	48	48	48	48	48	48	48	48	48	48	48	48	48	48	48	48	48	48	48	48	48	48	48	48	48	48	48	48	48	48	48	48	46	44	47	43	41	46	40	38
				Exposed	48	48	48	48	48	48	48	48	48	48	48	48	48	48	48	48	48	48	48	48	48	48	48	48	48	46	43	48	42	40	48	39	36	48	36	34	46	34	32	43	32	0
	D	2:12	9.5	Non-Exposed	35	35	35	35	35	35	35	35	35	35	35	35	35	35	35	35	35	35	35	35	35	35	35	35	35	35	35	35	35	35	35	35	35	35	35	35	35	35	35	35	35	35
				Exposed	35	35	35	35	35	35	35	35	35	35	35	35	35	35	35	35	35	35	35	35	35	35	35	35	35	35	35	35	35	35	35	35	35	35	35	34	35	33	0	35	0	0
		3:12	14.0	Non-Exposed	34	34	34	34	34	34	34	34	34	34	34	34	34	34	34	34	34	34	34	34	34	34	34	34	34	34	34	34	34	34	34	34	34	34	34	34	34	34	34	34	34	34
				Exposed	34	34	34	34	34	34	34	34	34	34	34	34	34	34	34	34	34	34	34	34	34	34	34	34	34	34	34	34	34	34	34	34	34	34	34	34	34	33	0	34	0	0
		4:12	18.4	Non-Exposed	34	34	34	34	34	34	34	34	34	34	34	34	34	34	34	34	34	34	34	34	34	34	34	34	34	34	34	34	34	34	34	34	34	34	34	34	34	34	34	34	34	34
				Exposed	34	34	34	34	34	34	34	34	34	34	34	34	34	34	34	34	34	34	34	34	34	34	34	34	34	34	34	34	34	34	34	34	34	34	34	34	34	33	0	34	0	0
		5:12	22.6	Non-Exposed	34	34		34	34		34	34		34	34		34	34		34	34		34	34		34	34		34	34		34	34		34	34		34	34		34	34		34	34	
				Exposed	34	34		34	34		34	34		34	34		34	34		34	34		34	34		34	34		34	34		34	34		34	34		34	34		34	34		34	34	
		6:12	26.6	Non-Exposed	35	35		35	35		35	35		35	35		35	35		35	35		35	35		35	35		35	35		35	35		35	35		35	35		35	35		35	35	
				Exposed	35	35		35	35		35	35		35	35		35	35		35	35		35	35		35	35		35	35		35	35		35	35		35	35		35	35		35	34	
		7:12	30.3	Non-Exposed	37	37	37	37	37	37	37	37	37	37	37	37	37	37	37	37	37	37	37	37	37	37	37	37	37	37	37	37	37	37	37	37	37	37	37	34	37	37	37	37	37	34
				Exposed	37	37	37	37	37	37	37	37	37	37	37	37	37	37	37	37	37	37	37	37	37	37	37	37	37	37	37	37	37	36	37	35	33	37	33	0	37	0	0	37	0	0
		8:12	33.7	Non-Exposed	39	39	39	39	39	39	39	39	39	39	39	39	39	39	39	39	39	39	39	39	39	39	39	39	39	39	39	39	39	39	39	39	39	39	39	34	39	39	37	39	37	34
				Exposed	39	39	39	39	39	39	39	39	39	39	39	39	39	39	39	39	39	39	39	39	39	39	39	39	39	39	39	39	38	36	39	35	33	39	33	0	39	0	0	39	0	0
		9:12	36.9	Non-Exposed	40	40	40	40	40	40	40	40	40	40	40	40	40	40	40	40	40	40	40	40	40	40	40	40	40	40	40	40	40	40	40	40	40	40	40	34	40	39	37	40	37	34
				Exposed	40	40	40	40	40	40	40	40	40	40	40	40	40	40	40	40	40	40	40	40	40	40	40	40	40	40	39	40	38	36	40	35	33	40	33	0	40	0	0	40	0	0
		10:12	39.8	Non-Exposed	43	43	43	43	43	43	43	43	43	43	43	43	43	43	43	43	43	43	43	43	43	43	43	43	43	43	43	43	43	43	43	43	42	43	42	39	42	39	37	42	37	34
				Exposed	43	43	43	43	43	43	43	43	43	43	43	43	43	43	43	43	43	43	43	43	43	43	43	43	43	41	39	43	38	36	43	35	33	43	33	0	42	0	0	40	0	0
		11:12	42.5	Non-Exposed	45	45	45	45	45	45	45	45	45	45	45	45	45	45	45	45	45	45	45	45	45	45	45	45	45	45	45	45	45	45	45	45	42	45	42	39	44	39	37	43	37	34
				Exposed	45	45	45	45	45	45	45	45	45	45	45	45	45	45	45	45	45	45	45	45	45	45	45	43	45	41	39	45	38	36	45	35	33	45	33	0	42	0	0	40	0	0
		12:12	45	Non-Exposed	48	48	48	48	48	48	48	48	48	48	48	48	48	48	48	48	48	48	48	48	48	48	48	48	48	48	48	48	48	46	47	45	42	47	42	39	46	39	37	45	37	34
				Exposed	48	48	48	48	48	48	48	48	48	48	48	48	48	48	48	48	48	48	48	48	45	48	45	43	48	41	39	48	38	36	47	35	33	45	33	0	42	0	0	40	0	0

Tamarack 2.3 Rail – Hip Flush-Mount on 30 Foot Maximum Mean Roof Height – Portrait – Panel Length = 68 Inches or Less

Ground Snow Load	Exposure Category	Roof Pitch	Roof Angle	Wind Speed (mph)	95			100			105			110			115			120			125			130			140			150			160			170			180			190		
				Roof Area	1	2	3	1	2	3	1	2	3	1	2	3	1	2	3	1	2	3	1	2	3	1	2	3	1	2	3	1	2	3	1	2	3	1	2	3	1	2	3	1	2	3
90	B	2:12	9.5	Non-Exposed	33	33	33	33	33	33	33	33	33	33	33	33	33	33	33	33	33	33	33	33	33	33	33	33	33	33	33	33	33	33	33	33	33	33	33	33	33	33	33	33	33	33
				Exposed	33	33	33	33	33	33	33	33	33	33	33	33	33	33	33	33	33	33	33	33	33	33	33	33	33	33	33	33	33	33	33	33	33	33	33	33	33	33	33	33	33	33
		3:12	14.0	Non-Exposed	32	32	32	32	32	32	32	32	32	32	32	32	32	32	32	32	32	32	32	32	32	32	32	32	32	32	32	32	32	32	32	32	32	32	32	32	32	32	32	32	32	32
				Exposed	32	32	32	32	32	32	32	32	32	32	32	32	32	32	32	32	32	32	32	32	32	32	32	32	32	32	32	32	32	32	32	32	32	32	32	32	32	32	32	32	32	32
		4:12	18.4	Non-Exposed	32	32	32	32	32	32	32	32	32	32	32	32	32	32	32	32	32	32	32	32	32	32	32	32	32	32	32	32	32	32	32	32	32	32	32	32	32	32	32	32	32	32
				Exposed	32	32	32	32	32	32	32	32	32	32	32	32	32	32	32	32	32	32	32	32	32	32	32	32	32	32	32	32	32	32	32	32	32	32	32	32	32	32	32	32	32	32
		5:12	22.6	Non-Exposed	32	32		32	32		32	32		32	32		32	32		32	32		32	32		32	32		32	32		32	32		32	32		32	32		32	32		32	32	
				Exposed	32	32		32	32		32	32		32	32		32	32		32	32		32	32		32	32		32	32		32	32		32	32		32	32		32	32		32	32	
		6:12	26.6	Non-Exposed	33	33		33	33		33	33		33	33		33	33		33	33		33	33		33	33		33	33		33	33		33	33		33	33		33	33		33	33	
				Exposed	33	33		33	33		33	33		33	33		33	33		33	33		33	33		33	33		33	33		33	33		33	33		33	33		33	33		33	33	
		7:12	30.3	Non-Exposed	35	35	35	35	35	35	35	35	35	35	35	35	35	35	35	35	35	35	35	35	35	35	35	35	35	35	35	35	35	35	35	35	35	35	35	35	35	35	35	35	35	35
				Exposed	35	35	35	35	35	35	35	35	35	35	35	35	35	35	35	35	35	35	35	35	35	35	35	35	35	35	35	35	35	35	35	35	35	35	35	35	35	35	35	35	35	35
		8:12	33.7	Non-Exposed	36	36	36	36	36	36	36	36	36	36	36	36	36	36	36	36	36	36	36	36	36	36	36	36	36	36	36	36	36	36	36	36	36	36	36	36	36	36	36	36	36	36
				Exposed	36	36	36	36	36	36	36	36	36	36	36	36	36	36	36	36	36	36	36	36	36	36	36	36	36	36	36	36	36	36	36	36	36	36	36	36	36	36	36	36	36	36
		9:12	36.9	Non-Exposed	38	38	38	38	38	38	38	38	38	38	38	38	38	38	38	38	38	38	38	38	38	38	38	38	38	38	38	38	38	38	38	38	38	38	38	38	38	38	38	38	38	38
				Exposed	38	38	38	38	38	38	38	38	38	38	38	38	38	38	38	38	38	38	38	38	38	38	38	38	38	38	38	38	38	38	38	38	38	38	38	38	38	38	38	38	38	36
		10:12	39.8	Non-Exposed	40	40	40	40	40	40	40	40	40	40	40	40	40	40	40	40	40	40	40	40	40	40	40	40	40	40	40	40	40	40	40	40	40	40	40	40	40	40	40	40	40	40
				Exposed	40	40	40	40	40	40	40	40	40	40	40	40	40	40	40	40	40	40	40	40	40	40	40	40	40	40	40	40	40	40	40	40	40	40	40	40	40	40	39	40	39	36
		11:12	42.5	Non-Exposed	43	43	43	43	43	43	43	43	43	43	43	43	43	43	43	43	43	43	43	43	43	43	43	43	43	43	43	43	43	43	43	43	43	43	43	43	43	43	43	43	43	43
				Exposed	43	43	43	43	43	43	43	43	43	43	43	43	43	43	43	43	43	43	43	43	43	43	43	43	43	43	43	43	43	43	43	43	42	43	41	39	43	39	36			
		12:12	45	Non-Exposed	45	45	45	45	45	45	45	45	45	45	45	45	45	45	45	45	45	45	45	45	45	45	45	45	45	45	45	45	45	45	45	45	45	45	45	45	45	45	45			
				Exposed	45	45	45	45	45	45	45	45	45	45	45	45	45	45	45	45	45	45	45	45	45	45	45	45	45	45	45	45	45	45	45	44	42	45	41	39	45	39	36			
	C	2:12	9.5	Non-Exposed	33	33	33	33	33	33	33	33	33	33	33	33	33	33	33	33	33	33	33	33	33	33	33	33	33	33	33	33	33	33	33	33	33	33	33	33	33	33	33	33	33	33
				Exposed	33	33	33	33	33	33	33	33	33	33	33	33	33	33	33	33	33	33	33	33	33	33	33	33	33	33	33	33	33	33	33	33	33	33	33	33	33	33	33	33	33	33
		3:12	14.0	Non-Exposed	32	32	32	32	32	32	32	32	32	32	32	32	32	32	32	32	32	32	32	32	32	32	32	32	32	32	32	32	32	32	32	32	32	32	32	32	32	32	32	32	32	32
				Exposed	32	32	32	32	32	32	32	32	32	32	32	32	32	32	32	32	32	32	32	32	32	32	32	32	32	32	32	32	32	32	32	32	32	32	32	32	32	32	32	32	32	32
		4:12	18.4	Non-Exposed	32	32	32	32	32	32	32	32	32	32	32	32	32	32	32	32	32	32	32	32	32	32	32	32	32	32	32	32	32	32	32	32	32	32	32	32	32	32	32	32	32	32
				Exposed	32	32	32	32	32	32	32	32	32	32	32	32	32	32	32	32	32	32	32	32	32	32	32	32	32	32	32	32	32	32	32	32	32	32	32	32	32	32	32	32	32	32
		5:12	22.6	Non-Exposed	32	32		32	32		32	32		32	32		32	32		32	32		32	32		32	32		32	32		32	32		32	32		32	32		32	32		32	32	
				Exposed	32	32		32	32		32	32		32	32		32	32		32	32		32	32		32	32		32	32		32	32		32	32		32	32		32	32		32	32	
		6:12	26.6	Non-Exposed	33	33		33	33		33	33		33	33		33	33		33	33		33	33		33	33		33	33		33	33		33	33		33	33		33	33		33	33	
				Exposed	33	33		33	33		33	33		33	33		33	33		33	33		33	33		33	33		33	33		33	33		33	33		33	33		33	33		33	33	
		7:12	30.3	Non-Exposed	35	35	35	35	35	35	35	35	35	35	35	35	35	35	35	35	35	35	35	35	35	35	35	35	35	35	35	35	35	35	35	35	35	35	35	35	35	35	35	35	35	35
				Exposed	35	35	35	35	35	35	35	35	35	35	35	35	35	35	35	35	35	35	35	35	35	35	35	35	35	35	35	35	35	35	35	35	34	35	34	32	35	32	0			
		8:12	33.7	Non-Exposed	36	36	36	36	36	36	36	36	36	36	36	36	36	36	36	36	36	36	36	36	36	36	36	36	36	36	36	36	36	36	36	36	36	36	36	36	36	36	36			
				Exposed	36	36	36	36	36	36	36	36	36	36	36	36	36	36	36	36	36	36	36	36	36	36	36	36	36	36	36	36	36	36	36	36	34	36	34	32	36	32	0			
		9:12	36.9	Non-Exposed	38	38	38	38	38	38	38	38	38	38	38	38	38	38	38	38	38	38	38	38	38	38	38	38	38	38	38	38	38	38	38	38	38	38	38	38	38	38	38			
				Exposed	38	38	38	38	38	38	38	38	38	38	38	38	38	38	38	38	38	38	38	38	38	38	38	38	38	38	38	38	38	37	38	36	34	38	34	32	38	32	0			
		10:12	39.8	Non-Exposed	40	40	40	40	40	40	40	40	40	40	40	40	40	40	40	40	40	40	40	40	40	40	40	40	40	40	40	40	40	40	40	40	40	40	40	40	40	40	38			
				Exposed	40	40	40	40	40	40	40	40	40	40	40	40	40	40	40	40	40	40	40	40	40	40	40	40	40	40	40	40	40	39	37	40	36	34	40	34	32	40	32	0			
		11:12	42.5	Non-Exposed	43	43	43	43	43	43	43	43	43	43	43	43	43	43	43	43	43	43	43	43	43	43	43	43	43	43	43	43	43	43	43	43	43	43	43	41	43	40	38			
				Exposed	43	43	43	43	43	43	43	43	43	43	43	43	43	43	43	43	43	43	43	43	43	43	43	43	43	43	43	43	42	40	43	39	37	43	36	34	43	34	32	43	32	0
		12:12	45	Non-Exposed	45	45	45	45	45	45	45	45	45	45	45	45	45	45	45	45	45	45	45	45	45	45	45	45	45	45	45	45	45	45	45	45	45	45	44	45	43	41	44	40	38	
				Exposed	45	45	45	45	45	45	45	45	45	45	45	45	45	45	45	45	45	45	45	45	45	45	45	45	45	45	43	45	42	40	45	39	36	45	36	34	45	34	32	43	32	0
	D	2:12	9.5	Non-Exposed	33	33	33	33	33	33	33	33	33	33	33	33	33	33	33	33	33	33	33	33	33	33	33	33	33	33	33	33	33	33	33	33	33	33	33	33	33	33	33	33	33	33
				Exposed	33	33	33	33	33	33	33	33	33	33	33	33	33	33	33	33	33	33	33	33	33	33	33	33	33	33	33	33	33	33	33	33	33	33	33	33	33	0	33	0	0	
		3:12	14.0	Non-Exposed	32	32	32	32	32	32	32	32	32	32	32	32	32	32	32	32	32	32	32	32	32	32	32	32	32	32	32	32	32	32	32	32	32	32	32	32	32	32	32	32	32	32
				Exposed	32	32	32	32	32	32	32	32	32	32	32	32	32	32	32	32	32	32	32	32	32	32	32	32	32	32	32	32	32	32	32	32	32	32	32	32	32	0	32	0	0	
		4:12	18.4	Non-Exposed	32	32	32	32	32	32	32	32	32	32	32	32	32	32	32	32	32	32	32	32	32	32	32	32	32	32	32	32	32	32	32	32	32	32	32	32	32	32	32	32	32	32
				Exposed	32	32	32	32	32	32	32	32	32	32	32	32	32	32	32	32	32	32	32	32	32	32	32	32	32	32	32	32	32	32	32	32	32	32	32	32	32	0	32	0	0	
		5:12	22.6	Non-Exposed	32	32		32	32		32	32		32	32		32	32		32	32		32	32		32	32		32	32		32	32		32	32		32	32		32	32		32	32	
				Exposed	32	32		32	32		32	32		32	32		32	32		32	32		32	32		32	32		32	32		32	32		32	32		32	32		32	32		32	32	
		6:12	26.6	Non-Exposed	33	33		33	33		33	33		33	33		33	33		33	33		33	33		33	33		33	33		33	33		33	33		33	33		33	33		33	33	
				Exposed	33	33		33	33		33	33		33	33		33	33		33	33		33	33		33	33		33	33		33	33		33	33		33	33		33	33		33	33	
		7:12	30.3	Non-Exposed	35	35	35	35	35	35	35	35	35	35	35	35	35	35	35	35	35	35	35	35	35	35	35	35	35	35	35	35	35	35	35	35	35	35	35	35	35	35	35	35	35	34
				Exposed	35	35	35	35	35	35	35	35	35	35	35	35	35	35	35	35	35	35	35	35	35	35	35	35	35	35	35	35	35	35	35	35	33	35	33	0	35	0	0	35	0	0
		8:12	33.7	Non-Exposed	36	36	36	36	36	36	36	36	36	36	36	36	36	36	36	36	36	36	36	36	36	36	36	36	36	36	36	36	36	36	36	36	36	36	36	36	36	36	36	36	36	34
				Exposed	36	36	36	36	36	36	36	36	36	36	36	36	36	36	36	36	36	36	36	36	36	36	36	36	36	36	36	36	36	36	36	35	33	36	33	0	36	0	0	36	0	0
		9:12	36.9	Non-Exposed	38	38	38	38	38	38	38	38	38	38	38	38	38	38	38	38	38	38	38	38	38	38	38	38	38	38	38	38	38	38	38	38	38	38	38	38	38	37	38	37	34	
				Exposed	38	38	38	38	38	38	38	38	38	38	38	38	38	38	38	38	38	38	38	38	38	38	38	38	38	38	38	38	36	38	35	33	38	33	0	38	0	0	38	0	0	
		10:12	39.8	Non-Exposed	40	40	40	40	40	40	40	40	40	40	40	40	40	40	40	40	40	40	40	40	40	40	40	40	40	40	40	40	40	40	40	40	40	40	39	40	39	37	40	37	34	
				Exposed	40	40	40	40	40	40	40	40	40	40	40	40	40	40	40	40	40	40	40	40	40	40	40	40	40	40	39	40	38	36	40	35	33	40	33	0	40	0	0	40	0	0
		11:12	42.5	Non-Exposed	43	43	43	43	43	43	43	43	43	43	43	43	43	43	43	43	43	43	43	43	43	43	43	43	43	43	43	43	43	43	43	43	42	43	42	39	42	39	37	42	37	34
				Exposed	43	43	43	43	43	43	43	43	43	43	43	43	43	43	43	43	43	43	43	43	43	43	43	43	43	41	39	43	38	36	43	35	33	43	33	0	42	0	0	40	0	0
		12:12	45	Non-Exposed	45	45	45	45	45	45	45	45	45	45	45	45	45	45	45	45	45	45	45	45	45	45	45	45	45	45	45	45	45	45	45	45	42	45	42	39	44	39	37	43	37	34
				Exposed	45	45	45	45	45	45	45	45	45	45	45	45	45	45	45	45	45	45	45	45	45	45	45	45	45	41	39	45	38	36	45	35	33	45	33	0	42	0	0	40	0	0

Tamarack 2.3 Rail – Hip Flush-Mount on 30 Foot Maximum Mean Roof Height – Portrait – Panel Length = 68 Inches or Less

Ground Snow Load	Exposure Category	Roof Pitch	Roof Angle	Wind Speed (mph)	95			100			105			110			115			120			125			130			140			150			160			170			180			190		
				Roof Area	1	2	3	1	2	3	1	2	3	1	2	3	1	2	3	1	2	3	1	2	3	1	2	3	1	2	3	1	2	3	1	2	3	1	2	3	1	2	3	1	2	3
100	B	2:12	9.5	Non-Exposed	31	31	31	31	31	31	31	31	31	31	31	31	31	31	31	31	31	31	31	31	31	31	31	31	31	31	31	31	31	31	31	31	31	31	31	31	31	31	31	31	31	31
				Exposed	31	31	31	31	31	31	31	31	31	31	31	31	31	31	31	31	31	31	31	31	31	31	31	31	31	31	31	31	31	31	31	31	31	31	31	31	31	31	31	31	31	31
		3:12	14.0	Non-Exposed	30	30	30	30	30	30	30	30	30	30	30	30	30	30	30	30	30	30	30	30	30	30	30	30	30	30	30	30	30	30	30	30	30	30	30	30	30	30	30	30	30	30
				Exposed	30	30	30	30	30	30	30	30	30	30	30	30	30	30	30	30	30	30	30	30	30	30	30	30	30	30	30	30	30	30	30	30	30	30	30	30	30	30	30	30	30	30
		4:12	18.4	Non-Exposed	30	30	30	30	30	30	30	30	30	30	30	30	30	30	30	30	30	30	30	30	30	30	30	30	30	30	30	30	30	30	30	30	30	30	30	30	30	30	30	30	30	30
				Exposed	30	30	30	30	30	30	30	30	30	30	30	30	30	30	30	30	30	30	30	30	30	30	30	30	30	30	30	30	30	30	30	30	30	30	30	30	30	30	30	30	30	30
		5:12	22.6	Non-Exposed	31	31		31	31		31	31		31	31		31	31		31	31		31	31		31	31		31	31		31	31		31	31		31	31		31	31		31	31	
				Exposed	31	31		31	31		31	31		31	31		31	31		31	31		31	31		31	31		31	31		31	31		31	31		31	31		31	31		31	31	
		6:12	26.6	Non-Exposed	32	32		32	32		32	32		32	32		32	32		32	32		32	32		32	32		32	32		32	32		32	32		32	32		32	32		32	32	
				Exposed	32	32		32	32		32	32		32	32		32	32		32	32		32	32		32	32		32	32		32	32		32	32		32	32		32	32		32	32	
		7:12	30.3	Non-Exposed	33	33	33	33	33	33	33	33	33	33	33	33	33	33	33	33	33	33	33	33	33	33	33	33	33	33	33	33	33	33	33	33	33	33	33	33	33	33	33	33	33	33
				Exposed	33	33	33	33	33	33	33	33	33	33	33	33	33	33	33	33	33	33	33	33	33	33	33	33	33	33	33	33	33	33	33	33	33	33	33	33	33	33	32	33	32	0
		8:12	33.7	Non-Exposed	35	35	35	35	35	35	35	35	35	35	35	35	35	35	35	35	35	35	35	35	35	35	35	35	35	35	35	35	35	35	35	35	35	35	35	35	35	35	35	35	35	35
				Exposed	35	35	35	35	35	35	35	35	35	35	35	35	35	35	35	35	35	35	35	35	35	35	35	35	35	35	35	35	35	34	35	35	35	35	35	34	35	34	32	35	32	0
		9:12	36.9	Non-Exposed	36	36	36	36	36	36	36	36	36	36	36	36	36	36	36	36	36	36	36	36	36	36	36	36	36	36	36	36	36	36	36	36	36	36	36	36	36	36	36	36	36	36
				Exposed	36	36	36	36	36	36	36	36	36	36	36	36	36	36	36	36	36	36	36	36	36	36	36	36	36	36	36	36	36	34	36	36	36	36	36	34	36	34	32	36	32	0
		10:12	39.8	Non-Exposed	38	38	38	38	38	38	38	38	38	38	38	38	38	38	38	38	38	38	38	38	38	38	38	38	38	38	38	38	38	38	38	38	38	38	38	38	38	38	38	38	38	38
				Exposed	38	38	38	38	38	38	38	38	38	38	38	38	38	38	38	38	38	38	38	38	38	38	38	38	38	38	38	38	38	36	38	38	38	38	38	34	38	34	32	38	32	0
		11:12	42.5	Non-Exposed	40	40	40	40	40	40	40	40	40	40	40	40	40	40	40	40	40	40	40	40	40	40	40	40	40	40	40	40	40	40	40	40	40	40	40	40	40	40	40	40	40	38
				Exposed	40	40	40	40	40	40	40	40	40	40	40	40	40	40	40	40	40	40	40	40	40	40	40	40	40	40	40	40	40	37	40	36	34	40	34	34	32	40	32	0
		12:12	45	Non-Exposed	43	43	43	43	43	43	43	43	43	43	43	43	43	43	43	43	43	43	43	43	43	43	43	43	43	43	43	43	43	43	43	43	43	43	43	43	43	43	41	43	40	38
				Exposed	43	43	43	43	43	43	43	43	43	43	43	43	43	43	43	43	43	43	43	43	43	43	43	43	43	43	43	43	42	40	43	39	36	43	36	34	43	34	32	43	32	0
	C	2:12	9.5	Non-Exposed	31	31	31	31	31	31	31	31	31	31	31	31	31	31	31	31	31	31	31	31	31	31	31	31	31	31	31	31	31	31	31	31	31	31	31	31	31	31	31	31	31	31
				Exposed	31	31	31	31	31	31	31	31	31	31	31	31	31	31	31	31	31	31	31	31	31	31	31	31	31	31	31	31	31	31	31	31	31	31	31	31	31	31	31	31	31	31
		3:12	14.0	Non-Exposed	30	30	30	30	30	30	30	30	30	30	30	30	30	30	30	30	30	30	30	30	30	30	30	30	30	30	30	30	30	30	30	30	30	30	30	30	30	30	30	30	30	30
				Exposed	30	30	30	30	30	30	30	30	30	30	30	30	30	30	30	30	30	30	30	30	30	30	30	30	30	30	30	30	30	30	30	30	30	30	30	30	30	30	30	30	30	30
		4:12	18.4	Non-Exposed	30	30	30	30	30	30	30	30	30	30	30	30	30	30	30	30	30	30	30	30	30	30	30	30	30	30	30	30	30	30	30	30	30	30	30	30	30	30	30	30	30	30
				Exposed	30	30	30	30	30	30	30	30	30	30	30	30	30	30	30	30	30	30	30	30	30	30	30	30	30	30	30	30	30	30	30	30	30	30	30	30	30	30	30	30	30	30
		5:12	22.6	Non-Exposed	31	31		31	31		31	31		31	31		31	31		31	31		31	31		31	31		31	31		31	31		31	31		31	31		31	31		31	31	
				Exposed	31	31		31	31		31	31		31	31		31	31		31	31		31	31		31	31		31	31		31	31		31	31		31	31		31	31		31	31	
		6:12	26.6	Non-Exposed	32	32		32	32		32	32		32	32		32	32		32	32		32	32		32	32		32	32		32	32		32	32		32	32		32	32		32	32	
				Exposed	32	32		32	32		32	32		32	32		32	32		32	32		32	32		32	32		32	32		32	32		32	32		32	32		32	32		32	32	
		7:12	30.3	Non-Exposed	33	33	33	33	33	33	33	33	33	33	33	33	33	33	33	33	33	33	33	33	33	33	33	33	33	33	33	33	33	33	33	33	33	33	33	33	33	33	33	33	33	33
				Exposed	33	33	33	33	33	33	33	33	33	33	33	33	33	33	33	33	33	33	33	33	33	33	33	33	33	33	33	33	33	33	33	33	33	33	33	33	33	33	32	33	32	0
		8:12	33.7	Non-Exposed	35	35	35	35	35	35	35	35	35	35	35	35	35	35	35	35	35	35	35	35	35	35	35	35	35	35	35	35	35	35	35	35	35	35	35	35	35	35	35	35	35	35
				Exposed	35	35	35	35	35	35	35	35	35	35	35	35	35	35	35	35	35	35	35	35	35	35	35	35	35	35	35	35	35	34	35	35	35	35	35	34	35	34	32	35	32	0
		9:12	36.9	Non-Exposed	36	36	36	36	36	36	36	36	36	36	36	36	36	36	36	36	36	36	36	36	36	36	36	36	36	36	36	36	36	36	36	36	36	36	36	36	36	36	36	36	36	36
				Exposed	36	36	36	36	36	36	36	36	36	36	36	36	36	36	36	36	36	36	36	36	36	36	36	36	36	36	36	36	36	34	36	36	36	36	36	34	36	34	32	36	32	0
		10:12	39.8	Non-Exposed	38	38	38	38	38	38	38	38	38	38	38	38	38	38	38	38	38	38	38	38	38	38	38	38	38	38	38	38	38	38	38	38	38	38	38	38	38	38	38	38	38	38
				Exposed	38	38	38	38	38	38	38	38	38	38	38	38	38	38	38	38	38	38	38	38	38	38	38	38	38	38	38	38	38	36	38	38	38	38	38	34	38	34	32	38	32	0
		11:12	42.5	Non-Exposed	40	40	40	40	40	40	40	40	40	40	40	40	40	40	40	40	40	40	40	40	40	40	40	40	40	40	40	40	40	40	40	40	40	40	40	40	40	40	40	40	40	38
				Exposed	40	40	40	40	40	40	40	40	40	40	40	40	40	40	40	40	40	40	40	40	40	40	40	40	40	40	40	40	40	37	40	36	34	40	34	34	32	40	32	0
		12:12	45	Non-Exposed	43	43	43	43	43	43	43	43	43	43	43	43	43	43	43	43	43	43	43	43	43	43	43	43	43	43	43	43	43	43	43	43	43	43	43	43	43	43	41	43	40	38
				Exposed	43	43	43	43	43	43	43	43	43	43	43	43	43	43	43	43	43	43	43	43	43	43	43	43	43	43	43	43	42	40	43	39	36	43	36	34	43	34	32	43	32	0
	D	2:12	9.5	Non-Exposed	31	31	31	31	31	31	31	31	31	31	31	31	31	31	31	31	31	31	31	31	31	31	31	31	31	31	31	31	31	31	31	31	31	31	31	31	31	31	31	31	31	31
				Exposed	31	31	31	31	31	31	31	31	31	31	31	31	31	31	31	31	31	31	31	31	31	31	31	31	31	31	31	31	31	31	31	31	31	31	31	31	31	31	0	31	0	0
		3:12	14.0	Non-Exposed	30	30	30	30	30	30	30	30	30	30	30	30	30	30	30	30	30	30	30	30	30	30	30	30	30	30	30	30	30	30	30	30	30	30	30	30	30	30	30	30	30	30
				Exposed	30	30	30	30	30	30	30	30	30	30	30	30	30	30	30	30	30	30	30	30	30	30	30	30	30	30	30	30	30	30	30	30	30	30	30	30	30	30	0	30	0	0
		4:12	18.4	Non-Exposed	30	30	30	30	30	30	30	30	30	30	30	30	30	30	30	30	30	30	30	30	30	30	30	30	30	30	30	30	30	30	30	30	30	30	30	30	30	30	30	30	30	30
				Exposed	30	30	30	30	30	30	30	30	30	30	30	30	30	30	30	30	30	30	30	30	30	30	30	30	30	30	30	30	30	30	30	30	30	30	30	30	30	30	0	30	0	0
		5:12	22.6	Non-Exposed	31	31		31	31		31	31		31	31		31	31		31	31		31	31		31	31		31	31		31	31		31	31		31	31		31	31		31	31	
				Exposed	31	31		31	31		31	31		31	31		31	31		31	31		31	31		31	31		31	31		31	31		31	31		31	31		31	31		31	31	
		6:12	26.6	Non-Exposed	32	32		32	32		32	32		32	32		32	32		32	32		32	32		32	32		32	32		32	32		32	32		32	32		32	32		32	32	
				Exposed	32	32		32	32		32	32		32	32		32	32		32	32		32	32		32	32		32	32		32	32		32	32		32	32		32	32		32	32	
		7:12	30.3	Non-Exposed	33	33	33	33	33	33	33	33	33	33	33	33	33	33	33	33	33	33	33	33	33	33	33	33	33	33	33	33	33	33	33	33	33	33	33	33	33	33	33	33	33	33
				Exposed	33	33	33	33	33	33	33	33	33	33	33	33	33	33	33	33	33	33	33	33	33	33	33	33	33	33	33	33	33	33	33	33	33	33	33	0	33	0	0	33	0	0
		8:12	33.7	Non-Exposed	35	35	35	35	35	35	35	35	35	35	35	35	35	35	35	35	35	35	35	35	35	35	35	35	35	35	35	35	35	35	35	35	35	35	35	35	35	35	35	35	35	34
				Exposed	35	35	35	35	35	35	35	35	35	35	35	35	35	35	35	35	35	35	35	35	35	35	35	35	35	35	35	35	35	35	35	35	35	35	33	0	35	0	0	35	0	0
		9:12	36.9	Non-Exposed	36	36	36	36	36	36	36	36	36	36	36	36	36	36	36	36	36	36	36	36	36	36	36	36	36	36	36	36	36	36	36	36	36	36	36	36	36	36	36	36	36	34
				Exposed	36	36	36	36	36	36	36	36	36	36	36	36	36	36	36	36	36	36	36	36	36	36	36	36	36	36	36	36	36	35	33	36	33	0	36	0	0	36	0	0	36	0
		10:12	39.8	Non-Exposed	38	38	38	38	38	38	38	38	38	38	38	38	38	38	38	38	38	38	38	38	38	38	38	38	38	38	38	38	38	38	38	38	38	38	38	38	38	38	37	38	37	34
				Exposed	38	38	38	38	38	38	38	38	38	38	38	38	38	38	38	38	38	38	38	38	38	38	38	38	38	38	38	38	38	36	38	35	33	38	33	0	38	0	0	38	0	0
		11:12	42.5	Non-Exposed	40	40	40	40	40	40	40	40	40	40	40	40	40	40	40	40	40	40	40	40	40	40	40	40	40	40	40	40	40	40	40	40	40	40	40	39	40	39	37	40	37	34
				Exposed	40	40	40	40	40	40	40	40	40	40	40	40	40	40	40	40	40	40	40	40	40	40	40	40	40	40	40	40	40	38	40	35	33	40	33	0	40	0	0	40	0	0
		12:12	45	Non-Exposed	43	43	43	43	43	43	43	43	43	43	43	43	43	43	43	43	43	43	43	43	43	43	43	43	43	43	43	43	43	39	42	42	39	42	42	39	42	39	37	42	37	34
				Exposed	43	43	43	43	43	43	43	43	43	43	43	43	43	43	43	43	43	43	43	43	43	43	43	43	43	41	39	43	38	36	43	35	33	43	33	0	42	0	0	40	0	0

Tamarack 2.3 Rail – Hip Flush-Mount on 30 Foot Maximum Mean Roof Height – Portrait – Panel Length = 68 Inches or Less

Ground Snow Load	Exposure Category	Roof Pitch	Roof Angle	Wind Speed (mph)	95			100			105			110			115			120			125			130			140			150			160			170			180			190		
				Roof Area	1	2	3	1	2	3	1	2	3	1	2	3	1	2	3	1	2	3	1	2	3	1	2	3	1	2	3	1	2	3	1	2	3	1	2	3	1	2	3	1	2	3
110	B	2:12	9.5	Non-Exposed	30	30	30	30	30	30	30	30	30	30	30	30	30	30	30	30	30	30	30	30	30	30	30	30	30	30	30	30	30	30	30	30	30	30	30	30	30	30	30	30	30	30
				Exposed	30	30	30	30	30	30	30	30	30	30	30	30	30	30	30	30	30	30	30	30	30	30	30	30	30	30	30	30	30	30	30	30	30	30	30	30	30	30	30	30	30	30
		3:12	14.0	Non-Exposed	29	29	29	29	29	29	29	29	29	29	29	29	29	29	29	29	29	29	29	29	29	29	29	29	29	29	29	29	29	29	29	29	29	29	29	29	29	29	29	29	29	29
				Exposed	29	29	29	29	29	29	29	29	29	29	29	29	29	29	29	29	29	29	29	29	29	29	29	29	29	29	29	29	29	29	29	29	29	29	29	29	29	29	29	29	29	29
		4:12	18.4	Non-Exposed	29	29	29	29	29	29	29	29	29	29	29	29	29	29	29	29	29	29	29	29	29	29	29	29	29	29	29	29	29	29	29	29	29	29	29	29	29	29	29	29	29	29
				Exposed	29	29	29	29	29	29	29	29	29	29	29	29	29	29	29	29	29	29	29	29	29	29	29	29	29	29	29	29	29	29	29	29	29	29	29	29	29	29	29	29	29	29
		5:12	22.6	Non-Exposed	29	29		29	29		29	29		29	29		29	29		29	29		29	29		29	29		29	29		29	29		29	29		29	29		29	29		29	29	
				Exposed	29	29		29	29		29	29		29	29		29	29		29	29		29	29		29	29		29	29		29	29		29	29		29	29		29	29		29	29	
		6:12	26.6	Non-Exposed	30	30		30	30		30	30		30	30		30	30		30	30		30	30		30	30		30	30		30	30		30	30		30	30		30	30		30	30	
				Exposed	30	30		30	30		30	30		30	30		30	30		30	30		30	30		30	30		30	30		30	30		30	30		30	30		30	30		30	30	
		7:12	30.3	Non-Exposed	31	31	31	31	31	31	31	31	31	31	31	31	31	31	31	31	31	31	31	31	31	31	31	31	31	31	31	31	31	31	31	31	31	31	31	31	31	31	31	31	31	31
				Exposed	31	31	31	31	31	31	31	31	31	31	31	31	31	31	31	31	31	31	31	31	31	31	31	31	31	31	31	31	31	31	31	31	31	31	31	31	31	31	31	31	31	31
		8:12	33.7	Non-Exposed	33	33	33	33	33	33	33	33	33	33	33	33	33	33	33	33	33	33	33	33	33	33	33	33	33	33	33	33	33	33	33	33	33	33	33	33	33	33	33	33	33	33
				Exposed	33	33	33	33	33	33	33	33	33	33	33	33	33	33	33	33	33	33	33	33	33	33	33	33	33	33	33	33	33	33	33	33	33	33	33	33	33	33	33	33	33	33
		9:12	36.9	Non-Exposed	35	35	35	35	35	35	35	35	35	35	35	35	35	35	35	35	35	35	35	35	35	35	35	35	35	35	35	35	35	35	35	35	35	35	35	35	35	35	35	35	35	35
				Exposed	35	35	35	35	35	35	35	35	35	35	35	35	35	35	35	35	35	35	35	35	35	35	35	35	35	35	35	35	35	35	35	35	35	35	35	35	35	35	35	35	35	35
		10:12	39.8	Non-Exposed	37	37	37	37	37	37	37	37	37	37	37	37	37	37	37	37	37	37	37	37	37	37	37	37	37	37	37	37	37	37	37	37	37	37	37	37	37	37	37	37	37	37
				Exposed	37	37	37	37	37	37	37	37	37	37	37	37	37	37	37	37	37	37	37	37	37	37	37	37	37	37	37	37	37	37	37	37	37	37	37	37	37	37	37	37	37	36
		11:12	42.5	Non-Exposed	39	39	39	39	39	39	39	39	39	39	39	39	39	39	39	39	39	39	39	39	39	39	39	39	39	39	39	39	39	39	39	39	39	39	39	39	39	39	39	39	39	39
				Exposed	39	39	39	39	39	39	39	39	39	39	39	39	39	39	39	39	39	39	39	39	39	39	39	39	39	39	39	39	39	39	39	39	39	39	39	39	39	39	39	39	39	36
		12:12	45	Non-Exposed	41	41	41	41	41	41	41	41	41	41	41	41	41	41	41	41	41	41	41	41	41	41	41	41	41	41	41	41	41	41	41	41	41	41	41	41	41	41	41	41	41	41
				Exposed	41	41	41	41	41	41	41	41	41	41	41	41	41	41	41	41	41	41	41	41	41	41	41	41	41	41	41	41	41	41	41	41	41	41	41	41	41	41	39	41	39	36
	C	2:12	9.5	Non-Exposed	30	30	30	30	30	30	30	30	30	30	30	30	30	30	30	30	30	30	30	30	30	30	30	30	30	30	30	30	30	30	30	30	30	30	30	30	30	30	30	30	30	30
				Exposed	30	30	30	30	30	30	30	30	30	30	30	30	30	30	30	30	30	30	30	30	30	30	30	30	30	30	30	30	30	30	30	30	30	30	30	30	30	30	30	30	30	30
		3:12	14.0	Non-Exposed	29	29	29	29	29	29	29	29	29	29	29	29	29	29	29	29	29	29	29	29	29	29	29	29	29	29	29	29	29	29	29	29	29	29	29	29	29	29	29	29	29	29
				Exposed	29	29	29	29	29	29	29	29	29	29	29	29	29	29	29	29	29	29	29	29	29	29	29	29	29	29	29	29	29	29	29	29	29	29	29	29	29	29	29	29	29	29
		4:12	18.4	Non-Exposed	29	29	29	29	29	29	29	29	29	29	29	29	29	29	29	29	29	29	29	29	29	29	29	29	29	29	29	29	29	29	29	29	29	29	29	29	29	29	29	29	29	29
				Exposed	29	29	29	29	29	29	29	29	29	29	29	29	29	29	29	29	29	29	29	29	29	29	29	29	29	29	29	29	29	29	29	29	29	29	29	29	29	29	29	29	29	29
		5:12	22.6	Non-Exposed	29	29		29	29		29	29		29	29		29	29		29	29		29	29		29	29		29	29		29	29		29	29		29	29		29	29		29	29	
				Exposed	29	29		29	29		29	29		29	29		29	29		29	29		29	29		29	29		29	29		29	29		29	29		29	29		29	29		29	29	
		6:12	26.6	Non-Exposed	30	30		30	30		30	30		30	30		30	30		30	30		30	30		30	30		30	30		30	30		30	30		30	30		30	30		30	30	
				Exposed	30	30		30	30		30	30		30	30		30	30		30	30		30	30		30	30		30	30		30	30		30	30		30	30		30	30		30	30	
		7:12	30.3	Non-Exposed	31	31	31	31	31	31	31	31	31	31	31	31	31	31	31	31	31	31	31	31	31	31	31	31	31	31	31	31	31	31	31	31	31	31	31	31	31	31	31	31	31	31
				Exposed	31	31	31	31	31	31	31	31	31	31	31	31	31	31	31	31	31	31	31	31	31	31	31	31	31	31	31	31	31	31	31	31	31	31	31	31	31	31	31	31	31	0
		8:12	33.7	Non-Exposed	33	33	33	33	33	33	33	33	33	33	33	33	33	33	33	33	33	33	33	33	33	33	33	33	33	33	33	33	33	33	33	33	33	33	33	33	33	33	33	33	33	33
				Exposed	33	33	33	33	33	33	33	33	33	33	33	33	33	33	33	33	33	33	33	33	33	33	33	33	33	33	33	33	33	33	33	33	33	33	33	32	33	32	0	33	32	0
		9:12	36.9	Non-Exposed	35	35	35	35	35	35	35	35	35	35	35	35	35	35	35	35	35	35	35	35	35	35	35	35	35	35	35	35	35	35	35	35	35	35	35	35	35	35	35	35	35	35
				Exposed	35	35	35	35	35	35	35	35	35	35	35	35	35	35	35	35	35	35	35	35	35	35	35	35	35	35	35	35	35	35	35	35	34	35	34	32	35	32	0	35	32	0
		10:12	39.8	Non-Exposed	37	37	37	37	37	37	37	37	37	37	37	37	37	37	37	37	37	37	37	37	37	37	37	37	37	37	37	37	37	37	37	37	37	37	37	37	37	37	37	37	37	37
				Exposed	37	37	37	37	37	37	37	37	37	37	37	37	37	37	37	37	37	37	37	37	37	37	37	37	37	37	37	37	37	37	37	36	34	37	34	32	37	32	0	37	32	0
		11:12	42.5	Non-Exposed	39	39	39	39	39	39	39	39	39	39	39	39	39	39	39	39	39	39	39	39	39	39	39	39	39	39	39	39	39	39	39	39	39	39	39	39	39	39	39	39	39	38
				Exposed	39	39	39	39	39	39	39	39	39	39	39	39	39	39	39	39	39	39	39	39	39	39	39	39	39	39	39	39	39	37	39	36	34	39	34	32	39	32	0	39	32	0
		12:12	45	Non-Exposed	41	41	41	41	41	41	41	41	41	41	41	41	41	41	41	41	41	41	41	41	41	41	41	41	41	41	41	41	41	41	41	41	41	41	41	41	41	40	38	41	40	38
				Exposed	41	41	41	41	41	41	41	41	41	41	41	41	41	41	41	41	41	41	41	41	41	41	41	41	41	41	41	40	41	39	36	41	36	34	41	34	32	41	32	0	41	32	0
	D	2:12	9.5	Non-Exposed	30	30	30	30	30	30	30	30	30	30	30	30	30	30	30	30	30	30	30	30	30	30	30	30	30	30	30	30	30	30	30	30	30	30	30	30	30	30	30	30	30	30
				Exposed	30	30	30	30	30	30	30	30	30	30	30	30	30	30	30	30	30	30	30	30	30	30	30	30	30	30	30	30	30	30	30	30	30	30	30	0	30	0	0	30	0	0
		3:12	14.0	Non-Exposed	29	29	29	29	29	29	29	29	29	29	29	29	29	29	29	29	29	29	29	29	29	29	29	29	29	29	29	29	29	29	29	29	29	29	29	29	29	29	29	29	29	29
				Exposed	29	29	29	29	29	29	29	29	29	29	29	29	29	29	29	29	29	29	29	29	29	29	29	29	29	29	29	29	29	29	29	29	29	29	29	29	29	0	29	0	0
		4:12	18.4	Non-Exposed	29	29	29	29	29	29	29	29	29	29	29	29	29	29	29	29	29	29	29	29	29	29	29	29	29	29	29	29	29	29	29	29	29	29	29	29	29	29	29	29	29	29
				Exposed	29	29	29	29	29	29	29	29	29	29	29	29	29	29	29	29	29	29	29	29	29	29	29	29	29	29	29	29	29	29	29	29	29	29	29	29	29	0	29	0	0
		5:12	22.6	Non-Exposed	29	29		29	29		29	29		29	29		29	29		29	29		29	29		29	29		29	29		29	29		29	29		29	29		29	29		29	29	
				Exposed	29	29		29	29		29	29		29	29		29	29		29	29		29	29		29	29		29	29		29	29		29	29		29	29		29	29		29	29	
		6:12	26.6	Non-Exposed	30	30		30	30		30	30		30	30		30	30		30	30		30	30		30	30		30	30		30	30		30	30		30	30		30	30		30	30	
				Exposed	30	30		30	30		30	30		30	30		30	30		30	30		30	30		30	30		30	30		30	30		30	30		30	30		30	30		30	30	
		7:12	30.3	Non-Exposed	31	31	31	31	31	31	31	31	31	31	31	31	31	31	31	31	31	31	31	31	31	31	31	31	31	31	31	31	31	31	31	31	31	31	31	31	31	31	31	31	31	31
				Exposed	31	31	31	31	31	31	31	31	31	31	31	31	31	31	31	31	31	31	31	31	31	31	31	31	31	31	31	31	31	31	31	31	0	31	0	0	31	0	0	31	0	0
		8:12	33.7	Non-Exposed	33	33	33	33	33	33	33	33	33	33	33	33	33	33	33	33	33	33	33	33	33	33	33	33	33	33	33	33	33	33	33	33	33	33	33	33	33	33	33	33	33	33
				Exposed	33	33	33	33	33	33	33	33	33	33	33	33	33	33	33	33	33	33	33	33	33	33	33	33	33	33	33	33	33	33	33	33	0	33	0	0	33	0	0	33	0	0
		9:12	36.9	Non-Exposed	35	35	35	35	35	35	35	35	35	35	35	35	35	35	35	35	35	35	35	35	35	35	35	35	35	35	35	35	35	35	35	35	35	35	35	35	35	35	35	35	35	34
				Exposed	35	35	35	35	35	35	35	35	35	35	35	35	35	35	35	35	35	35	35	35	35	35	35	35	35	35	35	35	35	33	35	33	0	35	0	0	35	0	0	35	0	0
		10:12	39.8	Non-Exposed	37	37	37	37	37	37	37	37	37	37	37	37	37	37	37	37	37	37	37	37	37	37	37	37	37	37	37	37	37	37	37	37	37	37	37	37	37	37	37	37	37	34
				Exposed	37	37	37	37	37	37	37	37	37	37	37	37	37	37	37	37	37	37	37	37	37	37	37	37	37	37	37	36	37	35	33	37	33	0	37	0	0	37	0	0	37	0	0
		11:12	42.5	Non-Exposed	39	39	39	39	39	39	39	39	39	39	39	39	39	39	39	39	39	39	39	39	39	39	39	39	39	39	39	39	39	39	39	39	39	39	39	39	39	37	39	37	34
				Exposed	39	39	39	39	39	39	39	39	39	39	39	39	39	39	39	39	39	39	39	39	39	39	39	39	39	39	39	38	36	39	35	33	39	33	0	39	0	0	39	0	0
		12:12	45	Non-Exposed	41	41	41	41	41	41	41	41	41	41	41	41	41	41	41	41	41	41	41	41	41	41	41	41	41	41	41	41	41	41	41	41	41	41	39	41	39	37	40	37	34
				Exposed	41	41	41	41	41	41	41	41	41	41	41	41	41	41	41	41	41	41	41	41	41	41	41	41	41	41	39	41	38	36	41	35	33	41	33	0	41	0	0	40	0	0

Tamarack 2.3 Rail – Hip Flush-Mount on 30 Foot Maximum Mean Roof Height – Portrait – Panel Length = 68 Inches or Less

Ground Snow Load	Exposure Category	Roof Pitch	Roof Angle	Wind Speed (mph)	95			100			105			110			115			120			125			130			140			150			160			170			180			190		
				Roof Area	1	2	3	1	2	3	1	2	3	1	2	3	1	2	3	1	2	3	1	2	3	1	2	3	1	2	3	1	2	3	1	2	3	1	2	3	1	2	3	1	2	3
120	B	2:12	9.5	Non-Exposed	29	29	29	29	29	29	29	29	29	29	29	29	29	29	29	29	29	29	29	29	29	29	29	29	29	29	29	29	29	29	29	29	29	29	29	29	29	29	29	29	29	29
				Exposed	29	29	29	29	29	29	29	29	29	29	29	29	29	29	29	29	29	29	29	29	29	29	29	29	29	29	29	29	29	29	29	29	29	29	29	29	29	29	29	29	29	29
		3:12	14.0	Non-Exposed	27	27	27	27	27	27	27	27	27	27	27	27	27	27	27	27	27	27	27	27	27	27	27	27	27	27	27	27	27	27	27	27	27	27	27	27	27	27	27	27	27	27
				Exposed	27	27	27	27	27	27	27	27	27	27	27	27	27	27	27	27	27	27	27	27	27	27	27	27	27	27	27	27	27	27	27	27	27	27	27	27	27	27	27	27	27	27
		4:12	18.4	Non-Exposed	27	27	27	27	27	27	27	27	27	27	27	27	27	27	27	27	27	27	27	27	27	27	27	27	27	27	27	27	27	27	27	27	27	27	27	27	27	27	27	27	27	27
				Exposed	27	27	27	27	27	27	27	27	27	27	27	27	27	27	27	27	27	27	27	27	27	27	27	27	27	27	27	27	27	27	27	27	27	27	27	27	27	27	27	27	27	27
		5:12	22.6	Non-Exposed	28	28		28	28		28	28		28	28		28	28		28	28		28	28		28	28		28	28		28	28		28	28		28	28		28	28		28	28	
				Exposed	28	28		28	28		28	28		28	28		28	28		28	28		28	28		28	28		28	28		28	28		28	28		28	28		28	28		28	28	
		6:12	26.6	Non-Exposed	29	29		29	29		29	29		29	29		29	29		29	29		29	29		29	29		29	29		29	29		29	29		29	29		29	29		29	29	
				Exposed	29	29		29	29		29	29		29	29		29	29		29	29		29	29		29	29		29	29		29	29		29	29		29	29		29	29		29	29	
		7:12	30.3	Non-Exposed	30	30	30	30	30	30	30	30	30	30	30	30	30	30	30	30	30	30	30	30	30	30	30	30	30	30	30	30	30	30	30	30	30	30	30	30	30	30	30	30	30	30
				Exposed	30	30	30	30	30	30	30	30	30	30	30	30	30	30	30	30	30	30	30	30	30	30	30	30	30	30	30	30	30	30	30	30	30	30	30	30	30	30	30	30	30	30
		8:12	33.7	Non-Exposed	31	31	31	31	31	31	31	31	31	31	31	31	31	31	31	31	31	31	31	31	31	31	31	31	31	31	31	31	31	31	31	31	31	31	31	31	31	31	31	31	31	31
				Exposed	31	31	31	31	31	31	31	31	31	31	31	31	31	31	31	31	31	31	31	31	31	31	31	31	31	31	31	31	31	31	31	31	31	31	31	31	31	31	31	31	31	31
		9:12	36.9	Non-Exposed	33	33	33	33	33	33	33	33	33	33	33	33	33	33	33	33	33	33	33	33	33	33	33	33	33	33	33	33	33	33	33	33	33	33	33	33	33	33	33	33	33	33
				Exposed	33	33	33	33	33	33	33	33	33	33	33	33	33	33	33	33	33	33	33	33	33	33	33	33	33	33	33	33	33	33	33	33	33	33	33	33	33	33	33	33	33	33
		10:12	39.8	Non-Exposed	35	35	35	35	35	35	35	35	35	35	35	35	35	35	35	35	35	35	35	35	35	35	35	35	35	35	35	35	35	35	35	35	35	35	35	35	35	35	35	35	35	35
				Exposed	35	35	35	35	35	35	35	35	35	35	35	35	35	35	35	35	35	35	35	35	35	35	35	35	35	35	35	35	35	35	35	35	35	35	35	34	35	34	32	35	32	0
		11:12	42.5	Non-Exposed	37	37	37	37	37	37	37	37	37	37	37	37	37	37	37	37	37	37	37	37	37	37	37	37	37	37	37	37	37	37	37	37	37	37	37	37	37	37	37	37	37	37
				Exposed	37	37	37	37	37	37	37	37	37	37	37	37	37	37	37	37	37	37	37	37	37	37	37	37	37	37	37	37	37	37	37	37	37	37	36	34	37	34	32	37	32	0
		12:12	45	Non-Exposed	39	39	39	39	39	39	39	39	39	39	39	39	39	39	39	39	39	39	39	39	39	39	39	39	39	39	39	39	39	39	39	39	39	39	39	39	39	39	39	39	39	38
				Exposed	39	39	39	39	39	39	39	39	39	39	39	39	39	39	39	39	39	39	39	39	39	39	39	39	39	39	39	39	39	39	39	39	36	39	36	34	39	34	32	39	32	0
	C	2:12	9.5	Non-Exposed	29	29	29	29	29	29	29	29	29	29	29	29	29	29	29	29	29	29	29	29	29	29	29	29	29	29	29	29	29	29	29	29	29	29	29	29	29	29	29	29	29	29
				Exposed	29	29	29	29	29	29	29	29	29	29	29	29	29	29	29	29	29	29	29	29	29	29	29	29	29	29	29	29	29	29	29	29	29	29	29	29	29	29	29	29	29	29
		3:12	14.0	Non-Exposed	27	27	27	27	27	27	27	27	27	27	27	27	27	27	27	27	27	27	27	27	27	27	27	27	27	27	27	27	27	27	27	27	27	27	27	27	27	27	27	27	27	27
				Exposed	27	27	27	27	27	27	27	27	27	27	27	27	27	27	27	27	27	27	27	27	27	27	27	27	27	27	27	27	27	27	27	27	27	27	27	27	27	27	27	27	27	27
		4:12	18.4	Non-Exposed	27	27	27	27	27	27	27	27	27	27	27	27	27	27	27	27	27	27	27	27	27	27	27	27	27	27	27	27	27	27	27	27	27	27	27	27	27	27	27	27	27	27
				Exposed	27	27	27	27	27	27	27	27	27	27	27	27	27	27	27	27	27	27	27	27	27	27	27	27	27	27	27	27	27	27	27	27	27	27	27	27	27	27	27	27	27	27
		5:12	22.6	Non-Exposed	28	28		28	28		28	28		28	28		28	28		28	28		28	28		28	28		28	28		28	28		28	28		28	28		28	28		28	28	
				Exposed	28	28		28	28		28	28		28	28		28	28		28	28		28	28		28	28		28	28		28	28		28	28		28	28		28	28		28	28	
		6:12	26.6	Non-Exposed	29	29		29	29		29	29		29	29		29	29		29	29		29	29		29	29		29	29		29	29		29	29		29	29		29	29		29	29	
				Exposed	29	29		29	29		29	29		29	29		29	29		29	29		29	29		29	29		29	29		29	29		29	29		29	29		29	29		29	29	
		7:12	30.3	Non-Exposed	30	30	30	30	30	30	30	30	30	30	30	30	30	30	30	30	30	30	30	30	30	30	30	30	30	30	30	30	30	30	30	30	30	30	30	30	30	30	30	30	30	30
				Exposed	30	30	30	30	30	30	30	30	30	30	30	30	30	30	30	30	30	30	30	30	30	30	30	30	30	30	30	30	30	30	30	30	30	30	30	30	30	30	30	30	30	0
		8:12	33.7	Non-Exposed	31	31	31	31	31	31	31	31	31	31	31	31	31	31	31	31	31	31	31	31	31	31	31	31	31	31	31	31	31	31	31	31	31	31	31	31	31	31	31	31	31	31
				Exposed	31	31	31	31	31	31	31	31	31	31	31	31	31	31	31	31	31	31	31	31	31	31	31	31	31	31	31	31	31	31	31	31	31	31	31	31	31	31	31	31	31	0
		9:12	36.9	Non-Exposed	33	33	33	33	33	33	33	33	33	33	33	33	33	33	33	33	33	33	33	33	33	33	33	33	33	33	33	33	33	33	33	33	33	33	33	33	33	33	33	33	33	33
				Exposed	33	33	33	33	33	33	33	33	33	33	33	33	33	33	33	33	33	33	33	33	33	33	33	33	33	33	33	33	33	33	33	33	33	33	33	33	33	33	32	33	32	0
		10:12	39.8	Non-Exposed	35	35	35	35	35	35	35	35	35	35	35	35	35	35	35	35	35	35	35	35	35	35	35	35	35	35	35	35	35	35	35	35	35	35	35	35	35	35	35	35	35	35
				Exposed	35	35	35	35	35	35	35	35	35	35	35	35	35	35	35	35	35	35	35	35	35	35	35	35	35	35	35	35	35	35	35	35	35	35	35	34	35	34	32	35	32	0
		11:12	42.5	Non-Exposed	37	37	37	37	37	37	37	37	37	37	37	37	37	37	37	37	37	37	37	37	37	37	37	37	37	37	37	37	37	37	37	37	37	37	37	37	37	37	37	37	37	37
				Exposed	37	37	37	37	37	37	37	37	37	37	37	37	37	37	37	37	37	37	37	37	37	37	37	37	37	37	37	37	37	37	37	37	37	37	36	34	37	34	32	37	32	0
		12:12	45	Non-Exposed	39	39	39	39	39	39	39	39	39	39	39	39	39	39	39	39	39	39	39	39	39	39	39	39	39	39	39	39	39	39	39	39	39	39	39	39	39	39	39	39	39	34
				Exposed	39	39	39	39	39	39	39	39	39	39	39	39	39	39	39	39	39	39	39	39	39	39	39	39	39	39	39	39	39	39	39	39	36	39	36	34	39	34	32	39	32	0
	D	2:12	9.5	Non-Exposed	29	29	29	29	29	29	29	29	29	29	29	29	29	29	29	29	29	29	29	29	29	29	29	29	29	29	29	29	29	29	29	29	29	29	29	29	29	29	29	29	29	29
				Exposed	29	29	29	29	29	29	29	29	29	29	29	29	29	29	29	29	29	29	29	29	29	29	29	29	29	29	29	29	29	29	29	29	29	29	29	29	29	29	0	29	0	0
		3:12	14.0	Non-Exposed	27	27	27	27	27	27	27	27	27	27	27	27	27	27	27	27	27	27	27	27	27	27	27	27	27	27	27	27	27	27	27	27	27	27	27	27	27	27	27	27	27	27
				Exposed	27	27	27	27	27	27	27	27	27	27	27	27	27	27	27	27	27	27	27	27	27	27	27	27	27	27	27	27	27	27	27	27	27	27	27	27	27	27	0	27	0	0
		4:12	18.4	Non-Exposed	27	27	27	27	27	27	27	27	27	27	27	27	27	27	27	27	27	27	27	27	27	27	27	27	27	27	27	27	27	27	27	27	27	27	27	27	27	27	27	27	27	27
				Exposed	27	27	27	27	27	27	27	27	27	27	27	27	27	27	27	27	27	27	27	27	27	27	27	27	27	27	27	27	27	27	27	27	27	27	27	27	27	27	0	27	0	0
		5:12	22.6	Non-Exposed	28	28		28	28		28	28		28	28		28	28		28	28		28	28		28	28		28	28		28	28		28	28		28	28		28	28		28	28	
				Exposed	28	28		28	28		28	28		28	28		28	28		28	28		28	28		28	28		28	28		28	28		28	28		28	28		28	28		28	28	
		6:12	26.6	Non-Exposed	29	29		29	29		29	29		29	29		29	29		29	29		29	29		29	29		29	29		29	29		29	29		29	29		29	29		29	29	
				Exposed	29	29		29	29		29	29		29	29		29	29		29	29		29	29		29	29		29	29		29	29		29	29		29	29		29	29		29	29	
		7:12	30.3	Non-Exposed	30	30	30	30	30	30	30	30	30	30	30	30	30	30	30	30	30	30	30	30	30	30	30	30	30	30	30	30	30	30	30	30	30	30	30	30	30	30	30	30	30	30
				Exposed	30	30	30	30	30	30	30	30	30	30	30	30	30	30	30	30	30	30	30	30	30	30	30	30	30	30	30	30	30	30	30	30	30	30	30	0	30	0	0	30	0	0
		8:12	33.7	Non-Exposed	31	31	31	31	31	31	31	31	31	31	31	31	31	31	31	31	31	31	31	31	31	31	31	31	31	31	31	31	31	31	31	31	31	31	31	31	31	31	31	31	31	31
				Exposed	31	31	31	31	31	31	31	31	31	31	31	31	31	31	31	31	31	31	31	31	31	31	31	31	31	31	31	31	31	31	31	31	31	31	31	0	31	0	0	31	0	0
		9:12	36.9	Non-Exposed	33	33	33	33	33	33	33	33	33	33	33	33	33	33	33	33	33	33	33	33	33	33	33	33	33	33	33	33	33	33	33	33	33	33	33	33	33	33	33	33	33	33
				Exposed	33	33	33	33	33	33	33	33	33	33	33	33	33	33	33	33	33	33	33	33	33	33	33	33	33	33	33	33	33	33	33	33	33	33	33	0	33	0	0	33	0	0
		10:12	39.8	Non-Exposed	35	35	35	35	35	35	35	35	35	35	35	35	35	35	35	35	35	35	35	35	35	35	35	35	35	35	35	35	35	35	35	35	35	35	35	35	35	35	35	35	35	34
				Exposed	35	35	35	35	35	35	35	35	35	35	35	35	35	35	35	35	35	35	35	35	35	35	35	35	35	35	35	35	35	35	35	35	33	35	33	0	35	0	0	35	0	0
		11:12	42.5	Non-Exposed	37	37	37	37	37	37	37	37	37	37	37	37	37	37	37	37	37	37	37	37	37	37	37	37	37	37	37	37	37	37	37	37	37	37	37	37	37	37	37	37	37	34
				Exposed	37	37	37	37	37	37	37	37	37	37	37	37	37	37	37	37	37	37	37	37	37	37	37	37	37	37	37	37	36	37	35	33	37	33	0	37	0	0	37	0	0
		12:12	45	Non-Exposed	39	39	39	39	39	39	39	39	39	39	39	39	39	39	39	39	39	39	39	39	39	39	39	39	39	39	39	39	39	39	39	39	39	39	39	39	39	39	37	39	37	34
				Exposed	39	39	39	39	39	39	39	39	39	39	39	39	39	39	39	39	39	39	39	39	39	39	39	39	39	39	39	38	36	39	35	33	39	33	0	39	0	0	39	0	0

Tamarack 2.3 Rail – Gable Flush-Mount on 30 Foot Maximum Mean Roof Height – Portrait – Panel Length = 80 Inches or Less

Ground Snow Load	Exposure Category	Roof Pitch	Roof Angle	Wind Speed (mph)	95			100			105			110			115			120			125			130			140			150			160			170			180			190		
				Roof Area	1	2	3	1	2	3	1	2	3	1	2	3	1	2	3	1	2	3	1	2	3	1	2	3	1	2	3	1	2	3	1	2	3	1	2	3	1	2	3	1	2	3
0	B	Flat	0	Non-Exposed	90	90	90	90	90	90	90	90	89	90	90	83	90	90	78	90	90	74	90	85	70	90	81	67	90	73	60	82	67	55	75	62	51	70	57	47	65	53	44	60	50	41
				Exposed	90	90	77	90	87	72	90	82	67	90	77	63	89	73	60	84	69	57	80	65	54	76	62	51	69	57	47	63	52	43	58	48	40	54	45	37	50	42	34	47	39	33
		1:12	4.8	Non-Exposed	88	88	88	88	88	88	88	88	88	88	88	82	88	88	78	88	88	73	88	84	70	88	80	66	88	73	60	81	67	55	75	62	51	69	57	47	64	53	44	60	50	41
				Exposed	88	88	76	88	87	71	88	81	67	88	76	63	88	72	60	83	68	57	79	65	54	75	62	51	68	57	47	63	52	43	58	48	40	54	45	37	50	42	34	47	39	33
		2:12	9.5	Non-Exposed	87	87	87	87	87	87	87	87	84	87	87	79	87	84	74	87	79	70	87	75	66	87	71	63	77	64	57	69	58	52	64	54	48	60	50	44	56	46	41	53	43	38
				Exposed	87	83	73	87	77	68	87	72	64	82	67	60	76	64	56	71	60	53	68	57	51	65	54	48	59	49	44	55	45	40	51	41	37	48	38	34	45	36	32	42	34	0
		3:12	14.0	Non-Exposed	86	86	86	86	86	86	86	86	84	86	86	78	86	83	74	86	78	70	86	74	66	86	70	63	76	64	57	69	58	52	64	53	48	60	49	44	56	46	41	53	43	38
				Exposed	86	82	73	86	76	68	86	71	63	81	67	60	75	63	56	71	60	53	67	57	50	64	54	48	59	49	44	55	45	40	51	41	37	47	38	34	44	35	32	42	34	0
		4:12	18.4	Non-Exposed	85	85	85	85	85	85	85	85	83	85	85	78	85	82	73	85	78	69	85	74	66	85	70	62	75	63	56	69	58	52	64	53	47	59	49	44	56	46	41	52	43	38
				Exposed	85	81	72	85	76	67	85	71	63	80	67	59	75	63	56	70	59	53	67	56	50	64	54	48	59	49	43	54	45	40	51	41	37	47	38	34	44	35	32	42	33	0
		5:12	22.6	Non-Exposed	84	84	84	84	84	84	84	84	84	84	84	84	84	84	84	84	84	80	84	82	76	84	78	72	84	70	65	81	64	59	75	59	54	70	55	50	65	51	47	61	48	43
				Exposed	84	84	83	84	84	78	84	79	73	84	74	68	84	70	64	84	66	61	79	63	58	76	60	55	69	54	50	64	50	45	59	46	42	55	43	39	52	40	36	49	37	34
		6:12	26.6	Non-Exposed	84	84	84	84	84	84	84	84	84	84	84	84	84	84	84	84	84	79	84	81	75	84	77	71	84	70	64	81	64	59	75	59	54	69	55	50	65	51	46	61	48	43
				Exposed	84	84	83	84	83	77	84	78	72	84	74	68	84	70	64	83	66	60	79	63	57	75	59	54	69	54	49	64	50	45	59	46	42	55	42	38	52	40	36	49	37	34
		7:12	30.3	Non-Exposed	83	83	83	83	83	83	83	83	83	83	83	83	83	83	83	83	83	83	83	83	80	83	83	76	83	79	69	81	73	64	74	67	59	69	62	54	64	58	51	59	54	47
				Exposed	83	83	83	83	83	82	83	83	77	83	83	73	83	78	69	83	74	65	79	71	62	75	67	59	68	62	54	62	56	49	57	52	46	53	48	42	49	45	40	46	42	37
		8:12	33.7	Non-Exposed	83	83	83	83	83	83	83	83	83	83	83	83	83	83	83	83	83	83	83	83	79	83	83	76	83	79	69	81	72	63	74	67	58	68	62	54	63	58	51	59	54	47
				Exposed	83	83	83	83	83	81	83	83	77	83	82	72	83	78	68	83	74	65	78	70	62	74	67	59	68	61	54	62	56	49	57	52	46	53	48	42	49	45	39	46	42	37
		9:12	36.9	Non-Exposed	82	82	82	82	82	82	82	82	82	82	82	82	82	82	82	82	82	82	82	82	79	82	82	75	82	78	69	80	72	63	74	66	58	68	62	54	63	58	50	59	54	47
				Exposed	82	82	82	82	82	81	82	82	76	82	82	72	82	78	68	82	74	65	78	70	61	74	67	59	67	61	54	62	56	49	57	52	45	52	48	42	49	45	39	45	42	37
		10:12	39.8	Non-Exposed	82	82	82	82	82	82	82	82	82	82	82	82	82	82	82	82	82	82	82	82	78	82	82	75	82	78	68	80	72	63	73	66	58	68	61	54	63	57	50	59	54	47
				Exposed	82	82	82	82	82	80	82	82	76	82	81	72	82	77	68	82	73	64	78	70	61	74	67	58	67	61	53	61	56	49	56	52	45	52	48	42	49	45	39	45	42	37
		11:12	42.5	Non-Exposed	82	82	82	82	82	82	82	82	82	82	82	82	82	82	82	82	82	82	82	82	78	82	82	74	82	77	68	79	71	63	73	66	58	68	61	54	63	57	50	59	54	47
				Exposed	82	82	82	82	82	80	82	82	75	82	81	71	82	77	68	81	73	64	77	70	61	73	66	58	67	61	53	61	56	49	56	52	45	52	48	42	49	45	39	45	42	37
		12:12	45	Non-Exposed	81	81	81	81	81	81	81	81	81	81	81	81	81	81	81	81	81	81	81	81	78	81	81	74	81	77	68	79	71	62	73	66	58	67	61	54	63	57	50	58	54	47
				Exposed	81	81	81	81	81	80	81	81	75	81	81	71	81	76	67	81	73	64	77	69	61	73	66	58	67	61	53	61	56	49	56	52	45	52	48	42	48	45	39	45	42	37
	C	Flat	0	Non-Exposed	90	90	81	90	90	75	90	86	71	90	80	66	90	76	63	88	72	59	83	68	56	79	65	54	72	59	49	66	54	45	61	50	41	56	47	38	52	44	36	49	41	34
				Exposed	90	75	62	86	70	58	80	66	54	75	62	51	71	59	48	67	56	46	64	53	44	61	51	42	56	46	38	51	42	35	47	39	33	44	37	0	41	34	0	38	32	0
		1:12	4.8	Non-Exposed	88	88	80	88	88	75	88	85	70	88	80	66	88	75	62	87	71	59	83	68	56	78	65	53	71	59	49	65	54	45	60	50	41	56	47	38	52	43	36	49	41	34
				Exposed	88	74	61	85	70	58	80	66	54	75	62	51	71	59	48	67	56	46	64	53	44	61	50	41	55	46	38	51	42	35	47	39	33	44	36	0	41	34	0	38	32	0
		2:12	9.5	Non-Exposed	87	87	77	87	81	71	87	75	67	87	71	63	81	66	59	75	63	56	70	59	53	67	56	50	62	51	46	57	47	42	53	43	38	49	40	36	46	37	33	44	35	32
				Exposed	79	65	58	73	61	54	68	57	51	65	54	48	61	51	45	58	48	43	56	46	41	53	43	39	49	39	35	45	36	33	42	34	0	39	32	0	37	0	0	35	0	0
		3:12	14.0	Non-Exposed	86	86	76	86	80	71	86	75	66	86	70	62	80	66	59	74	62	56	70	59	53	67	56	50	61	51	45	57	47	42	53	43	38	49	40	35	46	37	33	43	35	32
				Exposed	78	65	58	72	61	54	68	57	51	64	54	48	61	51	45	58	48	43	56	46	41	53	43	39	49	39	35	45	36	33	42	34	0	39	32	0	37	0	0	35	0	0
		4:12	18.4	Non-Exposed	85	85	75	85	79	70	85	74	66	85	70	62	79	66	59	74	62	55	70	59	53	67	56	50	61	51	45	57	47	42	53	43	38	49	40	35	46	37	33	43	35	32
				Exposed	77	65	58	71	61	54	67	57	51	64	53	48	61	51	45	58	48	43	55	45	40	53	43	39	49	39	35	45	36	33	42	34	0	39	32	0	37	0	0	35	0	0
		5:12	22.6	Non-Exposed	84	84	84	84	84	81	84	82	76	84	77	71	84	73	67	84	69	64	83	66	60	79	62	57	72	57	52	66	52	47	62	48	44	58	44	40	54	41	37	51	39	35
				Exposed	84	72	66	84	67	62	80	63	58	75	60	54	71	56	51	68	53	49	65	51	46	62	48	44	57	44	40	53	40	36	49	37	34	46	35	31	43	33	0	41	0	0
		6:12	26.6	Non-Exposed	84	84	84	84	84	81	84	82	76	84	77	71	84	73	67	84	69	63	82	65	60	78	62	57	71	57	52	66	52	47	61	48	43	57	44	40	54	41	37	51	39	35
				Exposed	84	71	66	84	67	62	79	63	58	75	59	54	71	56	51	68	53	48	65	51	46	62	48	44	57	44	40	53	40	36	49	37	34	46	35	31	43	33	0	40	0	0
		7:12	30.3	Non-Exposed	83	83	83	83	83	83	83	83	80	83	83	76	83	82	72	83	78	68	83	74	65	78	70	62	71	64	56	65	59	52	60	54	48	55	50	44	51	47	41	48	44	39
				Exposed	83	81	71	83	76	66	80	71	62	75	67	59	70	64	56	67	60	53	63	57	50	60	55	48	54	50	44	50	46	40	46	42	37	42	39	35	39	37	32	37	35	0
		8:12	33.7	Non-Exposed	83	83	83	83	83	83	83	83	80	83	83	75	83	81	71	83	77	68	82	73	64	78	70	61	71	64	56	65	59	51	59	54	47	55	50	44	51	47	41	48	44	38
				Exposed	83	80	70	83	75	66	79	71	62	74	67	59	70	63	56	66	60	53	63	57	50	60	55	48	54	50	44	50	46	40	46	42	37	42	39	35	39	37	32	37	35	0
		9:12	36.9	Non-Exposed	82	82	82	82	82	82	82	82	79	82	82	75	82	81	71	82	77	67	81	73	64	77	70	61	70	64	56	64	58	51	59	54	47	55	50	44	51	47	41	47	44	38
				Exposed	82	80	70	82	75	66	78	71	62	74	67	58	70	63	55	66	60	53	63	57	50	60	54	48	54	50	44	50	46	40	46	42	37	42	39	34	39	37	32	37	34	0
		10:12	39.8	Non-Exposed	82	82	82	82	82	82	82	82	79	82	82	75	82	80	71	82	76	67	81	73	64	77	69	61	70	63	56	64	58	51	59	54	47	55	50	44	51	47	41	47	44	38
				Exposed	82	79	70	82	74	65	78	70	62	74	66	58	69	63	55	66	60	52	62	57	50	59	54	48	54	50	43	49	46	40	46	42	37	42	39	34	39	37	32	37	34	0
		11:12	42.5	Non-Exposed	82	82	82	82	82	82	82	82	79	82	82	74	82	80	70	82	76	67	81	72	64	77	69	61	70	63	56	64	58	51	59	54	47	54	50	44	51	47	41	47	44	38
				Exposed	82	79	69	82	74	65	78	70	62	73	66	58	69	63	55	66	60	52	62	57	50	59	54	47	54	50	43	49	46	40	45	42	37	42	39	34	39	37	32	37	34	0
		12:12	45	Non-Exposed	81	81	81	81	81	81	81	81	78	81	81	74	81	80	70	81	76	67	80	72	63	76	69	61	69	63	55	64	58	51	59	54	47	54	50	44	51	47	41	47	44	38
				Exposed	81	79	69	81	74	65	77	70	61	73	66	58	69	63	55	65	59	52	62	57	50	59	54	47	54	49	43	49	46	40	45	42	37	42	39	34	39	37	32	37	34	0
	D	Flat	0	Non-Exposed	90	87	72	90	82	67	90	77	63	88	72	59	83	68	56	79	65	53	75	61	51	71	58	48	65	53	44	59	49	40	55	45	37	51	42	35	47	39	33	44	37	0
				Exposed	82	67	55	77	63	52	72	59	49	68	56	46	64	53	44	61	50	41	58	48	39	55	46	37	50	42	34	46	38	32	43	36	0	40	33	0	37	31	0	35	0	0
		1:12	4.8	Non-Exposed	88	87	72	88	81	67	88	76	63	87	72	59	82	68	56	78	64	53	74	61	50	70	58	48	64	53	44	59	49	40	54	45	37	51	42	35	47	39	33	44	37	0
				Exposed	81	67	55	76	63	52	71	59	49	67	56	46	64	53	43	60	50	41	57	48	39	55	45	37	50	42	34	46	38	32	43	35	0	40	33	0	37	31	0	35	0	0
		2:12	9.5	Non-Exposed	87	77	68	87	72	64	81	67	60	75	63	56	70	59	53	67	56	50	64	53	47	61	51	45	56	46	41	52	42	37	48	39	35	45	36	33	42	34	0	40	32	0
				Exposed	69	58	52	65	55	49	62	51	46	59	48	43	56	46	41	53	43	38	51	41	36	48	39	35	45	35	32	41	33	0	38	0	0	36	0	0	34	0	0	32	0	0
		3:12	14.0	Non-Exposed	86	76	68	86	71	63	81	67	59	75	63	56	70	59	53	67	56	50	64	53	47	61	50	45	56	46	41	52	42	37	48	39	35	45	36	33	42	34	0	40	32	0
				Exposed	69	58	52	65	54	49	62	51	46	58	48	43	55	45	41	53	43	38	50	41	36	48	39	35	44	35	32	41	33	0	38	0	0	36	0	0	34	0	0	32	0	0
		4:12	18.4	Non-Exposed	85	76	67	85	71	63	80	66	59	74	62	56	70	59	52	66	56	50	63	53	47	61	50	45	56	46	41	51	42	37	48	39	35	45	36	32	42	34	0	39	32	0
				Exposed	69	58	52	65	54	48	61	51	45	58	48	43	55	45	40	53	43	38	50	41	36	48	39	35	44	35	32	41	33	0	38	0	0	36	0	0	34	0	0	32	0	0
		5:12	22.6	Non-Exposed	84	84	78	84	79	73	84	74	68	84	69	64	83	66	60	78	62	57	75	59	54	71	56	51	65	51	46	60	47	42	56	43	39	52	40	36	49	37	34	46	35	32
				Exposed	82	65	59	76	60	55	72	57	52	68	54	49	65	51	46	62	48	44	59	46	41	56	43	39	52	40	36	48	36	33	45	34	31	42	32	0	39	0	0	37	0	0
		6:12	26.6	Non-Exposed	84	83	77	84	78	72	84	73	67	84	69	63	82	65	60	78	62	57	74	59	54	71	56	51	65	51	46	60	47	42	56	43	39	52	40	36	49	37	34	46	35	32
				Exposed	81	64	59	76	60	55	71	57	52	68	53	49	64	50	46	61	48	43	59	45	41	56	43	39	52	39	36	48	36	33	45	34	0	42	32	0	39	0	0	37	0	0
		7:12	30.3	Non-Exposed	83	83	82	83	83	77	83	83	72	83	78	68	83	74	65	78	70	61	74	66	58	70	63	55	64	58	51	58	53	46	53	49	43	49	46	40	46	42	37	43	40	35
				Exposed	81	73	64	76	68	60	71	64	56	67	61	53	63	57	50	60	54	48	57	52	45	54	49	43	49	45	39	45	41	36	41	38	34	38	36	31	35	34	0	33	32	0
		8:12	33.7	Non-Exposed	83	83	81	83	83	76	83	82	72	83	77	68	82	73	64	77	70	61	73	66	58	70	63	55	63	58	50	58	53	46	53	49	43	49	45	40	46	42	37	43	40	35
				Exposed	81	72	63	75	68	59	71	64	56	67	60	53	63	57	50	59	54	48	56	52	45	54	49	43	49	45	39	45	41	36	41	38	34	38	36	31	35	33	0	33	32	0
		9:12	36.9	Non-Exposed	82	82	81	82	82	76	82	81	72	82	77	68	81	73	64	77	69	61	73	66	58	69	63	55	63	57	50	58	53	46	53	49	43	49	45	40	46	42	37	43	40	35
				Exposed	80	72	63	75	68	59	70	64	56	66	60	53	63	57	50	59	54	47	56	52	45	53	49	43	49	45	39	45	41	36	41	38	34	38	35	31	35	33	0	33	32	0
		10:12	39.8	Non-Exposed	82	82	80	82	82	76	82	81	71	82	77	67	81	73	64	77	69	61	73	66	58	69	63	55	63	57	50	58	53	46	53	49	43	49	45	40	46	42	37	43	40	35
				Exposed	80	72	63	75	67	59	70	63	56	66	60	53	62	57	50	59	54	47	56	51	45	53	49	43	49	45	39	44	41	36	41	38	34	38	35	31	35	33	0	33	32	0
		11:12	42.5	Non-Exposed	82	82	80	82	82	75	82	81	71	82	76	67	80	72	64	76	69	60	72	65	58	69	62	55	63	57	50	57	53	46	53	49	43	49	45	40	46	42	37	43	40	35
				Exposed	79	71	63	74	67	59	70	63	56	66	60	53	62	57	50	59	54	47	56	51	45	53	49	43	48	45	39	44	41	36	41	38	34	38	35	31	35	33	0	33	32	0
		12:12	45	Non-Exposed	81	81	80	81	81	75	81	80	71	81	76	67	80	72	63	76	69	60	72	65	57	69	62	55	62	57	50	57	52	46	53	49	43	49	45	40	45	42	37	42	39	35
				Exposed	79	71	63	74	67	59	70	63	55	66	60	52	62	57	50	59	54	47	56	51	45	53	49	43	48	45	39	44	41	36	41	38	34	38	35	31	35	33	0	33	32	0

Tamarack 2.3 Rail – Gable Flush-Mount on 30 Foot Maximum Mean Roof Height – Portrait – Panel Length = 80 Inches or Less

Ground Snow Load	Exposure Category	Roof Pitch	Roof Angle	Wind Speed (mph)	95			100			105			110			115			120			125			130			140			150			160			170			180			190		
				Roof Area	1	2	3	1	2	3	1	2	3	1	2	3	1	2	3	1	2	3	1	2	3	1	2	3	1	2	3	1	2	3	1	2	3	1	2	3	1	2	3	1	2	3
5	B	Flat	0	Non-Exposed	85	85	85	85	85	85	85	85	85	85	85	83	85	85	78	85	85	74	85	85	70	85	81	67	85	73	60	82	67	55	75	62	51	70	57	47	65	53	44	60	50	41
				Exposed	85	85	77	85	85	72	85	82	67	85	77	63	85	73	60	84	69	57	80	65	54	76	62	51	69	57	47	63	52	43	58	48	40	54	45	37	50	42	34	47	39	33
		1:12	4.8	Non-Exposed	82	82	82	82	82	82	82	82	82	82	82	82	82	82	78	82	82	73	82	82	70	82	80	66	82	73	60	81	67	55	75	62	51	69	57	47	64	53	44	60	50	41
				Exposed	82	82	76	82	82	71	82	81	67	82	76	63	82	72	60	82	68	57	79	65	54	75	62	51	68	57	47	63	52	43	58	48	40	54	45	37	50	42	34	47	39	33
		2:12	9.5	Non-Exposed	80	80	80	80	80	80	80	80	80	80	80	79	80	80	74	80	79	70	80	75	66	80	71	63	77	64	57	69	58	52	64	54	48	60	50	44	56	46	41	53	43	38
				Exposed	80	80	73	80	77	68	80	72	64	80	67	60	76	64	56	71	60	53	68	57	51	65	54	48	59	49	44	55	45	40	51	41	37	48	38	34	45	36	32	42	34	0
		3:12	14.0	Non-Exposed	78	78	78	78	78	78	78	78	78	78	78	78	78	78	74	78	78	70	78	74	66	78	70	63	76	64	57	69	58	52	64	53	48	60	49	44	56	46	41	53	43	38
				Exposed	78	78	73	78	76	68	78	71	63	78	67	60	75	63	56	71	60	53	67	57	50	64	54	48	59	49	44	55	45	40	51	41	37	47	38	34	44	35	32	42	34	0
		4:12	18.4	Non-Exposed	80	80	80	80	80	80	80	80	80	80	80	78	80	80	73	80	78	69	80	74	66	80	70	62	75	63	56	69	58	52	64	53	47	59	49	44	56	46	41	52	43	38
				Exposed	80	80	72	80	76	67	80	71	63	80	67	59	75	63	56	70	59	53	67	56	50	64	54	48	59	49	43	54	45	40	51	41	37	47	38	34	44	35	32	42	33	0
		5:12	22.6	Non-Exposed	79	79	79	79	79	79	79	79	79	79	79	79	79	79	79	79	79	79	79	79	76	79	78	72	79	70	65	79	64	59	75	59	54	70	55	50	65	51	47	61	48	43
				Exposed	79	79	79	79	79	78	79	79	73	79	74	68	79	70	64	79	66	61	79	63	58	76	60	55	69	54	50	64	50	45	59	46	42	55	43	39	52	40	36	49	37	34
		6:12	26.6	Non-Exposed	80	80	80	80	80	80	80	80	80	80	80	80	80	80	80	80	80	79	80	80	75	80	77	71	80	70	64	80	64	59	75	59	54	69	55	50	65	51	46	61	48	43
				Exposed	80	80	80	80	80	77	80	78	72	80	74	68	80	70	64	80	66	60	79	63	57	75	59	54	69	54	49	64	50	45	59	46	42	55	42	38	52	40	36	49	37	34
		7:12	30.3	Non-Exposed	80	80	80	80	80	80	80	80	80	80	80	80	80	80	80	80	80	80	80	80	80	80	80	76	80	79	69	80	73	64	74	67	59	69	62	54	64	58	51	59	54	47
				Exposed	80	80	80	80	80	80	80	80	77	80	80	73	80	78	69	80	74	65	79	71	62	75	67	59	68	62	54	62	56	49	57	52	46	53	48	42	49	45	40	46	42	37
		8:12	33.7	Non-Exposed	80	80	80	80	80	80	80	80	80	80	80	80	80	80	80	80	80	80	80	80	79	80	80	76	80	79	69	80	72	63	74	67	58	68	62	54	63	58	51	59	54	47
				Exposed	80	80	80	80	80	80	80	80	77	80	80	72	80	78	68	80	74	65	78	70	62	74	67	59	68	61	54	62	56	49	57	52	46	53	48	42	49	45	39	46	42	37
		9:12	36.9	Non-Exposed	81	81	81	81	81	81	81	81	81	81	81	81	81	81	81	81	81	81	81	81	79	81	81	75	81	78	69	80	72	63	74	66	58	68	62	54	63	58	50	59	54	47
				Exposed	81	81	81	81	81	81	81	81	76	81	81	72	81	78	68	81	74	65	78	70	61	74	67	59	67	61	54	62	56	49	57	52	45	52	48	42	49	45	39	45	42	37
		10:12	39.8	Non-Exposed	81	81	81	81	81	81	81	81	81	81	81	81	81	81	81	81	81	81	81	81	78	81	81	75	81	78	68	80	72	63	73	66	58	68	61	54	63	57	50	59	54	47
				Exposed	81	81	81	81	81	80	81	81	76	81	81	72	81	77	68	81	73	64	78	70	61	74	67	58	67	61	53	61	56	49	56	52	45	52	48	42	49	45	39	45	42	37
		11:12	42.5	Non-Exposed	82	82	82	82	82	82	82	82	82	82	82	82	82	82	82	82	82	82	82	82	78	82	82	74	82	77	68	79	71	63	73	66	58	68	61	54	63	57	50	59	54	47
				Exposed	82	82	82	82	82	80	82	82	75	82	81	71	82	77	68	81	73	64	77	70	61	73	66	58	67	61	53	61	56	49	56	52	45	52	48	42	49	45	39	45	42	37
		12:12	45	Non-Exposed	81	81	81	81	81	81	81	81	81	81	81	81	81	81	81	81	81	81	81	81	78	81	81	74	81	77	68	79	71	62	73	66	58	67	61	54	63	57	50	58	54	47
				Exposed	81	81	81	81	81	80	81	81	75	81	81	71	81	76	67	81	73	64	77	69	61	73	66	58	67	61	53	61	56	49	56	52	45	52	48	42	48	45	39	45	42	37
	C	Flat	0	Non-Exposed	85	85	81	85	85	75	85	85	71	85	80	66	85	76	63	85	72	59	83	68	56	79	65	54	72	59	49	66	54	45	61	50	41	56	47	38	52	44	36	49	41	34
				Exposed	85	75	62	85	70	58	80	66	54	75	62	51	71	59	48	67	56	46	64	53	44	61	51	42	56	46	38	51	42	35	47	39	33	44	37	0	41	34	0	38	32	0
		1:12	4.8	Non-Exposed	82	82	80	82	82	75	82	82	70	82	80	66	82	75	62	82	71	59	82	68	56	78	65	53	71	59	49	65	54	45	60	50	41	56	47	38	52	43	36	49	41	34
				Exposed	82	74	61	82	70	58	80	66	54	75	62	51	71	59	48	67	56	46	64	53	44	61	50	41	55	46	38	51	42	35	47	39	33	44	36	0	41	34	0	38	32	0
		2:12	9.5	Non-Exposed	80	80	77	80	80	71	80	75	67	80	71	63	80	66	59	75	63	56	70	59	53	67	56	50	62	51	46	57	47	42	53	43	38	49	40	36	46	37	33	44	35	32
				Exposed	79	65	58	73	61	54	68	57	51	65	54	48	61	51	45	58	48	43	56	46	41	53	43	39	49	39	35	45	36	33	42	34	0	39	32	0	37	0	0	35	0	0
		3:12	14.0	Non-Exposed	78	78	76	78	78	71	78	75	66	78	70	62	78	66	59	74	62	56	70	59	53	67	56	50	61	51	45	57	47	42	53	43	38	49	40	35	46	37	33	43	35	32
				Exposed	78	65	58	72	61	54	68	57	51	64	54	48	61	51	45	58	48	43	56	46	41	53	43	39	49	39	35	45	36	33	42	34	0	39	32	0	37	0	0	35	0	0
		4:12	18.4	Non-Exposed	80	80	75	80	79	70	80	74	66	80	70	62	79	66	59	74	62	55	70	59	53	67	56	50	61	51	45	57	47	42	53	43	38	49	40	35	46	37	33	43	35	32
				Exposed	77	65	58	71	61	54	67	57	51	64	53	48	61	51	45	58	48	43	55	45	40	53	43	39	49	39	35	45	36	33	42	34	0	39	32	0	37	0	0	35	0	0
		5:12	22.6	Non-Exposed	79	79	79	79	79	79	79	79	76	79	77	71	79	73	67	79	69	64	79	66	60	79	62	57	72	57	52	66	52	47	62	48	44	58	44	40	54	41	37	51	39	35
				Exposed	79	72	66	79	67	62	79	63	58	75	60	54	71	56	51	68	53	49	65	51	46	62	48	44	57	44	40	53	40	36	49	37	34	46	35	31	43	33	0	41	0	0
		6:12	26.6	Non-Exposed	80	80	80	80	80	80	80	80	76	80	77	71	80	73	67	80	69	63	80	65	60	78	62	57	71	57	52	66	52	47	61	48	43	57	44	40	54	41	37	51	39	35
				Exposed	80	71	66	80	67	62	79	63	58	75	59	54	71	56	51	68	53	48	65	51	46	62	48	44	57	44	40	53	40	36	49	37	34	46	35	31	43	33	0	40	0	0
		7:12	30.3	Non-Exposed	80	80	80	80	80	80	80	80	80	80	80	76	80	80	72	80	78	68	80	74	65	78	70	62	71	64	56	65	59	52	60	54	48	55	50	44	51	47	41	48	44	39
				Exposed	80	80	71	80	76	66	80	71	62	75	67	59	70	64	56	67	60	53	63	57	50	60	55	48	54	50	44	50	46	40	46	42	37	42	39	35	39	37	32	37	35	0
		8:12	33.7	Non-Exposed	80	80	80	80	80	80	80	80	80	80	80	75	80	80	71	80	77	68	80	73	64	78	70	61	71	64	56	65	59	51	59	54	47	55	50	44	51	47	41	48	44	38
				Exposed	80	80	70	80	75	66	79	71	62	74	67	59	70	63	56	66	60	53	63	57	50	60	55	48	54	50	44	50	46	40	46	42	37	42	39	35	39	37	32	37	35	0
		9:12	36.9	Non-Exposed	81	81	81	81	81	81	81	81	79	81	81	75	81	81	71	81	77	67	81	73	64	77	70	61	70	64	56	64	58	51	59	54	47	55	50	44	51	47	41	47	44	38
				Exposed	81	80	70	81	75	66	78	71	62	74	67	58	70	63	55	66	60	53	63	57	50	60	54	48	54	50	44	50	46	40	46	42	37	42	39	34	39	37	32	37	34	0
		10:12	39.8	Non-Exposed	81	81	81	81	81	81	81	81	79	81	81	75	81	80	71	81	76	67	81	73	64	77	69	61	70	63	56	64	58	51	59	54	47	55	50	44	51	47	41	47	44	38
				Exposed	81	79	70	81	74	65	78	70	62	74	66	58	69	63	55	66	60	52	62	57	50	59	54	48	54	50	43	49	46	40	46	42	37	42	39	34	39	37	32	37	34	0
		11:12	42.5	Non-Exposed	82	82	82	82	82	82	82	82	79	82	82	74	82	80	70	82	76	67	81	72	64	77	69	61	70	63	56	64	58	51	59	54	47	54	50	44	51	47	41	47	44	38
				Exposed	82	79	69	82	74	65	78	70	62	73	66	58	69	63	55	66	60	52	62	57	50	59	54	47	54	50	43	49	46	40	45	42	37	42	39	34	39	37	32	37	34	0
		12:12	45	Non-Exposed	81	81	81	81	81	81	81	81	78	81	81	74	81	80	70	81	76	67	80	72	63	76	69	61	69	63	55	64	58	51	59	54	47	54	50	44	51	47	41	47	44	38
				Exposed	81	79	69	81	74	65	77	70	61	73	66	58	69	63	55	65	59	52	62	57	50	59	54	47	54	49	43	49	46	40	45	42	37	42	39	34	39	37	32	37	34	0
	D	Flat	0	Non-Exposed	85	85	72	85	82	67	85	77	63	85	72	59	83	68	56	79	65	53	75	61	51	71	58	48	65	53	44	59	49	40	55	45	37	51	42	35	47	39	33	44	37	0
				Exposed	82	67	55	77	63	52	72	59	49	68	56	46	64	53	44	61	50	41	58	48	39	55	46	37	50	42	34	46	38	32	43	36	0	40	33	0	37	31	0	35	0	0
		1:12	4.8	Non-Exposed	82	82	72	82	81	67	82	76	63	82	72	59	82	68	56	78	64	53	74	61	50	70	58	48	64	53	44	59	49	40	54	45	37	51	42	35	47	39	33	44	37	0
				Exposed	81	67	55	76	63	52	71	59	49	67	56	46	64	53	43	60	50	41	57	48	39	55	45	37	50	42	34	46	38	32	43	35	0	40	33	0	37	31	0	35	0	0
		2:12	9.5	Non-Exposed	80	77	68	80	72	64	80	67	60	75	63	56	70	59	53	67	56	50	64	53	47	61	51	45	56	46	41	52	42	37	48	39	35	45	36	33	42	34	0	40	32	0
				Exposed	69	58	52	65	55	49	62	51	46	59	48	43	56	46	41	53	43	38	51	41	36	48	39	35	45	35	32	41	33	0	38	0	0	36	0	0	34	0	0	32	0	0
		3:12	14.0	Non-Exposed	78	76	68	78	71	63	78	67	59	75	63	56	70	59	53	67	56	50	64	53	47	61	50	45	56	46	41	52	42	37	48	39	35	45	36	33	42	34	0	40	32	0
				Exposed	69	58	52	65	54	49	62	51	46	58	48	43	55	45	41	53	43	38	50	41	36	48	39	35	44	35	32	41	33	0	38	0	0	36	0	0	34	0	0	32	0	0
		4:12	18.4	Non-Exposed	80	76	67	80	71	63	80	66	59	74	62	56	70	59	52	66	56	50	63	53	47	61	50	45	56	46	41	51	42	37	48	39	35	45	36	32	42	34	0	39	32	0
				Exposed	69	58	52	65	54	48	61	51	45	58	48	43	55	45	40	53	43	38	50	41	36	48	39	35	44	35	32	41	33	0	38	0	0	36	0	0	34	0	0	32	0	0
		5:12	22.6	Non-Exposed	79	79	78	79	79	73	79	74	68	79	69	64	79	66	60	78	62	57	75	59	54	71	56	51	65	51	46	60	47	42	56	43	39	52	40	36	49	37	34	46	35	32
				Exposed	79	65	59	76	60	55	72	57	52	68	54	49	65	51	46	62	48	44	59	46	41	56	43	39	52	40	36	48	36	33	45	34	31	42	32	0	39	0	0	37	0	0
		6:12	26.6	Non-Exposed	80	80	77	80	78	72	80	73	67	80	69	63	80	65	60	78	62	57	74	59	54	71	56	51	65	51	46	60	47	42	56	43	39	52	40	36	49	37	34	46	35	32
				Exposed	80	64	59	76	60	55	71	57	52	68	53	49	64	50	46	61	48	43	59	45	41	56	43	39	52	39	36	48	36	33	45	34	0	42	32	0	39	0	0	37	0	0
		7:12	30.3	Non-Exposed	80	80	80	80	80	77	80	80	72	80	78	68	80	74	65	78	70	61	74	66	58	70	63	55	64	58	51	58	53	46	53	49	43	49	46	40	46	42	37	43	40	35
				Exposed	80	73	64	76	68	60	71	64	56	67	61	53	63	57	50	60	54	48	57	52	45	54	49	43	49	45	39	45	41	36	41	38	34	38	36	31	35	34	0	33	32	0
		8:12	33.7	Non-Exposed	80	80	80	80	80	76	80	80	72	80	77	68	80	73	64	77	70	61	73	66	58	70	63	55	63	58	50	58	53	46	53	49	43	49	45	40	46	42	37	43	40	35
				Exposed	80	72	63	75	68	59	71	64	56	67	60	53	63	57	50	59	54	48	56	52	45	54	49	43	49	45	39	45	41	36	41	38	34	38	36	31	35	33	0	33	32	0
		9:12	36.9	Non-Exposed	81	81	81	81	81	76	81	81	72	81	77	68	81	73	64	77	69	61	73	66	58	69	63	55	63	57	50	58	53	46	53	49	43	49	45	40	46	42	37	43	40	35
				Exposed	80	72	63	75	68	59	70	64	56	66	60	53	63	57	50	59	54	47	56	52	45	53	49	43	49	45	39	45	41	36	41	38	34	38	35	31	35	33	0	33	32	0
		10:12	39.8	Non-Exposed	81	81	80	81	81	76	81	81	71	81	77	67	81	73	64	77	69	61	73	66	58	69	63	55	63	57	50	58	53	46	53	49	43	49	45	40	46	42	37	43	40	35
				Exposed	80	72	63	75	67	59	70	63	56	66	60	53	62	57	50	59	54	47	56	51	45	53	49	43	49	45	39	44	41	36	41	38	34	38	35	31	35	33	0	33	32	0
		11:12	42.5	Non-Exposed	82	82	80	82	82	75	82	81	71	82	76	67	80	72	64	76	69	60	72	65	58	69	62	55	63	57	50	57	53	46	53	49	43	49	45	40	46	42	37	43	40	35
				Exposed	79	71	63	74	67	59	70	63	56	66	60	53	62	57	50	59	54	47	56	51	45	53	49	43	48	45	39	44	41	36	41	38	34	38	35	31	35	33	0	33	32	0
		12:12	45	Non-Exposed	81	81	80	81	81	75	81	80	71	81	76	67	80	72	63	76	69	60	72	65	57	69	62	55	62	57	50	57	52	46	53	49	43	49	45	40	45	42	37	42	39	35
				Exposed	79	71	63	74	67	59	70	63	55	66	60	52	60	57	50	59	54	47	56	51	45	53	49	43	48	45	39	44	41	36	41	38	34	38	35	31	35	33	0	33	32	0

Tamarack 2.3 Rail – Gable Flush-Mount on 30 Foot Maximum Mean Roof Height – Portrait – Panel Length = 80 Inches or Less

Ground Snow Load	Exposure Category	Roof Pitch	Roof Angle	Wind Speed (mph)	95			100			105			110			115			120			125			130			140			150			160			170			180			190		
				Roof Area	1	2	3	1	2	3	1	2	3	1	2	3	1	2	3	1	2	3	1	2	3	1	2	3	1	2	3	1	2	3	1	2	3	1	2	3	1	2	3	1	2	3
10	B	Flat	0	Non-Exposed	75	75	75	75	75	75	75	75	75	75	75	75	75	75	75	75	75	74	75	75	70	75	75	67	75	73	60	75	67	55	75	62	51	70	57	47	65	53	44	60	50	41
				Exposed	75	75	75	75	75	72	75	75	67	75	75	63	75	73	60	75	69	57	75	65	54	75	62	51	69	57	47	63	52	43	58	48	40	54	45	37	50	42	34	47	39	33
		1:12	4.8	Non-Exposed	72	72	72	72	72	72	72	72	72	72	72	72	72	72	72	72	72	72	72	72	70	72	72	66	72	72	60	72	67	55	72	62	51	69	57	47	64	53	44	60	50	41
				Exposed	72	72	72	72	72	71	72	72	67	72	72	63	72	72	60	72	68	57	72	65	54	72	62	51	68	57	47	63	52	43	58	48	40	54	45	37	50	42	34	47	39	33
		2:12	9.5	Non-Exposed	70	70	70	70	70	70	70	70	70	70	70	70	70	70	70	70	70	70	70	70	66	70	70	63	70	64	57	69	58	52	64	54	48	60	50	44	56	46	41	53	43	38
				Exposed	70	70	70	70	70	68	70	70	64	70	67	60	70	64	56	70	60	53	68	57	51	65	54	48	59	49	44	55	45	40	51	41	37	48	38	34	45	36	32	42	34	0
		3:12	14.0	Non-Exposed	68	68	68	68	68	68	68	68	68	68	68	68	68	68	68	68	68	68	68	68	66	68	68	63	68	64	57	68	58	52	64	53	48	60	49	44	56	46	41	53	43	38
				Exposed	68	68	68	68	68	68	68	68	63	68	67	60	68	63	56	68	60	53	67	57	50	64	54	48	59	49	44	55	45	40	51	41	37	47	38	34	44	35	32	42	34	0
		4:12	18.4	Non-Exposed	70	70	70	70	70	70	70	70	70	70	70	70	70	70	70	70	70	69	70	70	66	70	70	62	70	63	56	69	58	52	64	53	47	59	49	44	56	46	41	52	43	38
				Exposed	70	70	70	70	70	67	70	70	63	70	67	59	70	63	56	70	59	53	67	56	50	64	54	48	59	49	43	54	45	40	51	41	37	47	38	34	44	35	32	42	33	0
		5:12	22.6	Non-Exposed	71	71	71	71	71	71	71	71	71	71	71	71	71	71	71	71	71	71	71	71	71	71	71	71	71	70	65	71	64	59	71	59	54	70	55	50	65	51	47	61	48	43
				Exposed	71	71	71	71	71	71	71	71	71	71	71	68	71	70	64	71	66	61	71	63	58	71	60	55	69	54	50	64	50	45	59	46	42	55	43	39	52	40	36	49	37	34
		6:12	26.6	Non-Exposed	71	71	71	71	71	71	71	71	71	71	71	71	71	71	71	71	71	71	71	71	71	71	71	71	71	70	64	71	64	59	71	59	54	69	55	50	65	51	46	61	48	43
				Exposed	71	71	71	71	71	71	71	71	71	71	71	68	71	70	64	71	66	60	71	63	57	71	59	54	69	54	49	64	50	45	59	46	42	55	42	38	52	40	36	49	37	34
		7:12	30.3	Non-Exposed	72	72	72	72	72	72	72	72	72	72	72	72	72	72	72	72	72	72	72	72	72	72	72	72	72	72	69	72	72	64	71	67	59	69	62	54	64	58	51	59	54	47
				Exposed	72	72	72	72	72	72	72	72	72	72	72	72	72	72	69	72	72	65	72	71	62	72	67	59	68	62	54	62	56	49	57	52	46	53	48	42	49	45	40	46	42	37
		8:12	33.7	Non-Exposed	73	73	73	73	73	73	73	73	73	73	73	73	73	73	73	73	73	73	73	73	73	73	73	73	73	73	69	73	72	63	71	67	58	68	62	54	63	58	51	59	54	47
				Exposed	73	73	73	73	73	73	73	73	73	73	73	72	73	73	68	73	73	65	73	70	62	73	67	59	68	61	54	62	56	49	57	52	46	53	48	42	49	45	39	46	42	37
		9:12	36.9	Non-Exposed	74	74	74	74	74	74	74	74	74	74	74	74	74	74	74	74	74	74	74	74	74	74	74	74	74	74	69	74	72	63	73	66	58	68	62	54	63	58	50	59	54	47
				Exposed	74	74	74	74	74	74	74	74	74	74	74	72	74	74	68	74	74	65	74	70	61	74	67	59	67	61	54	62	56	49	57	52	45	52	48	42	49	45	39	45	42	37
		10:12	39.8	Non-Exposed	75	75	75	75	75	75	75	75	75	75	75	75	75	75	75	75	75	75	75	75	75	75	75	75	75	75	68	75	72	63	73	66	58	68	61	54	63	57	50	59	54	47
				Exposed	75	75	75	75	75	75	75	75	75	75	75	72	75	75	68	75	73	64	75	70	61	74	67	58	67	61	53	61	56	49	56	52	45	52	48	42	49	45	39	45	42	37
		11:12	42.5	Non-Exposed	76	76	76	76	76	76	76	76	76	76	76	76	76	76	76	76	76	76	76	76	74	76	76	68	76	71	63	73	66	58	68	61	54	63	57	50	59	54	47
				Exposed	76	76	76	76	76	76	76	76	75	76	76	71	76	76	68	76	73	64	76	70	61	73	66	58	67	61	53	61	56	49	56	52	45	52	48	42	49	45	39	45	42	37
		12:12	45	Non-Exposed	77	77	77	77	77	77	77	77	77	77	77	77	77	77	77	77	77	77	77	77	77	77	77	74	77	77	68	77	71	62	73	66	58	67	61	54	63	57	50	58	54	47
				Exposed	77	77	77	77	77	77	77	77	75	77	77	71	77	76	67	77	73	64	77	69	61	73	66	58	67	61	53	61	56	49	56	52	45	52	48	42	48	45	39	45	42	37
	C	Flat	0	Non-Exposed	75	75	75	75	75	75	75	75	71	75	75	66	75	75	63	75	72	59	75	68	56	75	65	54	72	59	49	66	54	45	61	50	41	56	47	38	52	44	36	49	41	34
				Exposed	75	75	62	75	70	58	75	66	54	75	62	51	71	59	48	67	56	46	64	53	44	61	51	42	56	46	38	51	42	35	47	39	33	44	37	0	41	34	0	38	32	0
		1:12	4.8	Non-Exposed	72	72	72	72	72	72	72	72	70	72	72	66	72	72	62	72	71	59	72	68	56	72	65	53	71	59	49	65	54	45	60	50	41	56	47	38	52	43	36	49	41	34
				Exposed	72	72	61	72	70	58	72	66	54	72	62	51	71	59	48	67	56	46	64	53	44	61	50	41	55	46	38	51	42	35	47	39	33	44	36	0	41	34	0	38	32	0
		2:12	9.5	Non-Exposed	70	70	70	70	70	70	70	70	67	70	70	63	70	66	59	70	63	56	70	59	53	67	56	50	62	51	46	57	47	42	53	43	38	49	40	36	46	37	33	44	35	32
				Exposed	70	65	58	70	61	54	68	57	51	65	54	48	61	51	45	58	48	43	56	46	41	53	43	39	49	39	35	45	36	33	42	34	0	39	32	0	37	0	0	35	0	0
		3:12	14.0	Non-Exposed	68	68	68	68	68	68	68	68	66	68	68	62	68	66	59	68	62	56	68	59	53	67	56	50	61	51	45	57	47	42	53	43	38	49	40	35	46	37	33	43	35	32
				Exposed	68	65	58	68	61	54	68	57	51	64	54	48	61	51	45	58	48	43	56	46	41	53	43	39	49	39	35	45	36	33	42	34	0	39	32	0	37	0	0	35	0	0
		4:12	18.4	Non-Exposed	70	70	70	70	70	70	70	70	66	70	70	62	70	66	59	70	62	55	70	59	53	67	56	50	61	51	45	57	47	42	53	43	38	49	40	35	46	37	33	43	35	32
				Exposed	70	65	58	70	61	54	67	57	51	64	53	48	61	51	45	58	48	43	55	45	40	53	43	39	49	39	35	45	36	33	42	34	0	39	32	0	37	0	0	35	0	0
		5:12	22.6	Non-Exposed	71	71	71	71	71	71	71	71	71	71	71	71	71	71	67	71	69	64	71	66	60	71	62	57	71	57	52	66	52	47	62	48	44	58	44	40	54	41	37	51	39	35
				Exposed	71	71	66	71	67	62	71	63	58	71	60	54	71	56	51	68	53	49	65	51	46	62	48	44	57	44	40	53	40	36	49	37	34	46	35	31	43	33	0	41	0	0
		6:12	26.6	Non-Exposed	71	71	71	71	71	71	71	71	71	71	71	71	71	71	67	71	69	63	71	65	60	71	62	57	71	57	52	66	52	47	61	48	43	57	44	40	54	41	37	51	39	35
				Exposed	71	71	66	71	67	62	71	63	58	71	59	54	71	56	51	68	53	48	65	51	46	62	48	44	57	44	40	53	40	36	49	37	34	46	35	31	43	33	0	40	0	0
		7:12	30.3	Non-Exposed	72	72	72	72	72	72	72	72	72	72	72	72	72	72	72	72	72	68	72	72	65	72	70	62	69	64	56	65	59	52	60	54	48	55	50	44	51	47	41	48	44	39
				Exposed	72	72	71	72	72	66	72	71	62	72	67	59	70	64	56	67	60	53	63	57	50	60	55	48	54	50	44	50	46	40	46	42	37	42	39	35	39	37	32	37	35	0
		8:12	33.7	Non-Exposed	73	73	73	73	73	73	73	73	73	73	73	73	73	73	71	73	73	68	73	73	64	73	70	61	70	64	56	65	59	51	59	54	47	55	50	44	51	47	41	48	44	38
				Exposed	73	73	70	73	73	66	73	71	62	73	67	59	70	63	56	66	60	53	63	57	50	60	55	48	54	50	44	50	46	40	46	42	37	42	39	35	39	37	32	37	35	0
		9:12	36.9	Non-Exposed	74	74	74	74	74	74	74	74	74	74	74	74	74	74	71	74	74	67	74	73	64	74	70	61	70	64	56	64	58	51	59	54	47	55	50	44	51	47	41	47	44	38
				Exposed	74	74	70	74	74	66	74	71	62	74	67	58	70	63	55	66	60	53	63	57	50	60	54	48	54	50	44	50	46	40	46	42	37	42	39	34	39	37	32	37	34	0
		10:12	39.8	Non-Exposed	75	75	75	75	75	75	75	75	75	75	75	75	75	75	71	75	75	67	75	73	64	75	69	61	70	63	56	64	58	51	59	54	47	55	50	44	51	47	41	47	44	38
				Exposed	75	75	70	75	74	65	75	70	62	74	66	58	69	63	55	66	60	52	62	57	50	59	54	48	54	50	43	49	46	40	46	42	37	42	39	34	39	37	32	37	34	0
		11:12	42.5	Non-Exposed	76	76	76	76	76	76	76	76	76	76	76	74	76	76	70	76	76	67	76	72	64	76	69	61	70	63	56	64	58	51	59	54	47	54	50	44	51	47	41	47	44	38
				Exposed	76	76	69	76	74	65	76	70	62	73	66	58	69	63	55	66	60	52	62	57	50	59	54	47	54	50	43	49	46	40	45	42	37	42	39	34	39	37	32	37	34	0
		12:12	45	Non-Exposed	77	77	77	77	77	77	77	77	77	77	77	74	77	77	70	77	76	67	77	72	63	76	69	61	69	63	55	64	58	51	59	54	47	54	50	44	51	47	41	47	44	38
				Exposed	77	77	69	77	74	65	77	70	61	73	66	58	69	63	55	65	59	52	62	57	50	59	54	47	54	49	43	49	46	40	45	42	37	42	39	34	39	37	32	37	34	0
	D	Flat	0	Non-Exposed	75	75	72	75	75	67	75	75	63	75	72	59	75	68	56	75	65	53	75	61	51	71	58	48	65	53	44	59	49	40	55	45	37	51	42	35	47	39	33	44	37	0
				Exposed	75	67	55	75	63	52	72	59	49	68	56	46	64	53	44	61	50	41	58	48	39	55	46	37	50	42	34	46	38	32	43	36	0	40	33	0	37	31	0	35	0	0
		1:12	4.8	Non-Exposed	72	72	72	72	72	67	72	72	63	72	72	59	72	68	56	72	64	53	72	61	50	70	58	48	64	53	44	59	49	40	54	45	37	51	42	35	47	39	33	44	37	0
				Exposed	72	67	55	72	63	52	71	59	49	67	56	46	64	53	43	60	50	41	57	48	39	55	45	37	50	42	34	46	38	32	43	35	0	40	33	0	37	31	0	35	0	0
		2:12	9.5	Non-Exposed	70	70	68	70	70	64	70	67	60	70	63	56	70	59	53	67	56	50	64	53	47	61	51	45	56	46	41	52	42	37	48	39	35	45	36	33	42	34	0	40	32	0
				Exposed	69	58	52	65	55	49	62	51	46	59	48	43	56	46	41	53	43	38	51	41	36	48	39	35	45	35	32	41	33	0	38	0	0	36	0	0	34	0	0	32	0	0
		3:12	14.0	Non-Exposed	68	68	68	68	68	63	68	67	59	68	63	56	68	59	53	67	56	50	64	53	47	61	50	45	56	46	41	52	42	37	48	39	35	45	36	33	42	34	0	40	32	0
				Exposed	68	58	52	65	54	49	62	51	46	58	48	43	55	45	41	53	43	38	50	41	36	48	39	35	44	35	32	41	33	0	38	0	0	36	0	0	34	0	0	32	0	0
		4:12	18.4	Non-Exposed	70	70	67	70	70	63	70	66	59	70	62	56	70	59	52	66	56	50	63	53	47	61	50	45	56	46	41	51	42	37	48	39	35	45	36	32	42	34	0	39	32	0
				Exposed	69	58	52	65	54	48	61	51	45	58	48	43	55	45	40	53	43	38	50	41	36	48	39	35	44	35	32	41	33	0	38	0	0	36	0	0	34	0	0	32	0	0
		5:12	22.6	Non-Exposed	71	71	71	71	71	71	71	71	68	71	69	64	71	66	60	71	62	57	71	59	54	71	56	51	65	51	46	60	47	42	56	43	39	52	40	36	49	37	34	46	35	32
				Exposed	71	65	59	71	60	55	71	57	52	68	54	49	65	51	46	62	48	44	59	46	41	56	43	39	52	40	36	48	36	33	45	34	31	42	32	0	39	0	0	37	0	0
		6:12	26.6	Non-Exposed	71	71	71	71	71	71	71	71	67	71	69	63	71	65	60	71	62	57	71	59	54	71	56	51	65	51	46	60	47	42	56	43	39	52	40	36	49	37	34	46	35	32
				Exposed	71	64	59	71	60	55	71	57	52	68	53	49	64	50	46	61	48	43	59	45	41	56	43	39	52	39	36	48	36	33	45	34	0	42	32	0	39	0	0	37	0	0
		7:12	30.3	Non-Exposed	72	72	72	72	72	72	72	72	72	72	72	68	72	72	65	72	70	61	70	66	58	69	63	55	64	58	51	58	53	46	53	49	43	49	46	40	46	42	37	43	40	35
				Exposed	72	72	64	72	68	60	71	64	56	67	61	53	63	57	50	60	54	48	57	52	45	54	49	43	49	45	39	45	41	36	41	38	34	38	36	31	35	34	0	33	32	0
		8:12	33.7	Non-Exposed	73	73	73	73	73	73	73	73	72	73	73	68	73	73	64	73	70	61	71	66	58	70	63	55	63	58	50	58	53	46	53	49	43	49	45	40	46	42	37	43	40	35
				Exposed	73	72	63	73	68	59	71	64	56	67	60	53	63	57	50	59	54	48	56	52	45	54	49	43	49	45	39	45	41	36	41	38	34	38	36	31	35	33	0	33	32	0
		9:12	36.9	Non-Exposed	74	74	74	74	74	74	74	74	72	74	74	68	74	73	64	74	69	61	72	66	58	69	63	55	63	57	50	58	53	46	53	49	43	49	45	40	46	42	37	43	40	35
				Exposed	74	72	63	74	68	59	70	64	56	66	60	53	63	57	50	59	54	47	56	52	45	53	49	43	49	45	39	45	41	36	41	38	34	38	35	31	35	33	0	33	32	0
		10:12	39.8	Non-Exposed	75	75	75	75	75	75	75	75	71	75	75	67	75	73	64	75	69	61	73	66	58	69	63	55	63	57	50	58	53	46	53	49	43	49	45	40	46	42	37	43	40	35
				Exposed	75	72	63	75	67	59	70	63	56	66	60	53	62	57	50	59	54	47	56	51	45	53	49	43	49	45	39	44	41	36	41	38	34	38	35	31	35	33	0	33	32	0
		11:12	42.5	Non-Exposed	76	76	76	76	76	75	76	76	71	76	76	67	76	72	64	76	69	60	72	65	58	69	62	55	63	57	50	57	53	46	53	49	43	49	45	40	46	42	37	43	40	35
				Exposed	76	71	63	74	67	59	70	63	56	66	60	53	62	57	50	59	54	47	56	51	45	53	49	43	48	45	39	44	41	36	41	38	34	38	35	31	35	33	0	33	32	0
		12:12	45	Non-Exposed	77	77	77	77	77	75	77	77	71	77	76	67	77	72	63	76	69	60	72	65	57	69	62	55	62	57	50	57	52	46	53	49	43	49	45	40	45	42	37	42	39	35
				Exposed	77	71	63	74	67	59	70	63	55	66	60	52	62	57	50	59	54	47	56	51	45	53	49	43	48	45	39	44	41	36	41	38	34	38	35	31	35	33	0	33	32	0

Tamarack 2.3 Rail – Gable Flush-Mount on 30 Foot Maximum Mean Roof Height – Portrait – Panel Length = 80 Inches or Less

Ground Snow Load	Exposure Category	Roof Pitch	Roof Angle	Wind Speed (mph)	95			100			105			110			115			120			125			130			140			150			160			170			180			190		
				Roof Area	1	2	3	1	2	3	1	2	3	1	2	3	1	2	3	1	2	3	1	2	3	1	2	3	1	2	3	1	2	3	1	2	3	1	2	3	1	2	3	1	2	3
15	B	Flat	0	Non-Exposed	68	68	68	68	68	68	68	68	68	68	68	68	68	68	68	68	68	68	68	68	68	68	68	67	68	68	60	68	67	55	68	62	51	68	57	47	65	53	44	60	50	41
				Exposed	68	68	68	68	68	68	68	68	67	68	68	63	68	68	60	68	68	57	68	65	54	68	62	51	68	57	47	63	52	43	58	48	40	54	45	37	50	42	34	47	39	33
		1:12	4.8	Non-Exposed	65	65	65	65	65	65	65	65	65	65	65	65	65	65	65	65	65	65	65	65	65	65	65	65	65	65	60	65	65	55	65	62	51	65	57	47	64	53	44	60	50	41
				Exposed	65	65	65	65	65	65	65	65	65	65	65	63	65	65	60	65	65	57	65	65	54	65	62	51	65	57	47	63	52	43	58	48	40	54	45	37	50	42	34	47	39	33
		2:12	9.5	Non-Exposed	63	63	63	63	63	63	63	63	63	63	63	63	63	63	63	63	63	63	63	63	63	63	63	57	63	58	52	63	54	48	60	50	44	56	46	41	53	43	38			
				Exposed	63	63	63	63	63	63	63	63	63	63	63	60	63	63	56	63	60	53	63	57	51	63	54	48	59	49	44	55	45	40	51	41	37	48	38	34	45	36	32	42	34	0
		3:12	14.0	Non-Exposed	61	61	61	61	61	61	61	61	61	61	61	61	61	61	61	61	61	61	61	61	61	61	61	61	61	61	57	61	58	52	61	53	48	60	49	44	56	46	41	53	43	38
				Exposed	61	61	61	61	61	61	61	61	61	61	61	60	61	61	56	61	60	53	61	57	50	61	54	48	59	49	44	55	45	40	51	41	37	47	38	34	44	35	32	42	34	0
		4:12	18.4	Non-Exposed	64	64	64	64	64	64	64	64	64	64	64	64	64	64	64	64	64	64	64	64	64	64	64	62	64	63	56	64	58	52	64	53	47	59	49	44	56	46	41	52	43	38
				Exposed	64	64	64	64	64	64	64	64	63	64	64	59	64	63	56	64	59	53	64	56	50	64	54	48	59	49	43	54	45	40	51	41	37	47	38	34	44	35	32	42	33	0
		5:12	22.6	Non-Exposed	64	64	64	64	64	64	64	64	64	64	64	64	64	64	64	64	64	64	64	64	64	64	64	64	64	64	64	64	64	59	64	59	54	64	55	50	64	51	47	61	48	43
				Exposed	64	64	64	64	64	64	64	64	64	64	64	64	64	64	64	64	64	61	64	63	58	64	60	55	64	54	50	64	50	45	59	46	42	55	43	39	52	40	36	49	37	34
		6:12	26.6	Non-Exposed	65	65	65	65	65	65	65	65	65	65	65	65	65	65	65	65	65	65	65	65	65	65	65	65	65	65	64	65	64	59	65	59	54	65	55	50	65	51	46	61	48	43
				Exposed	65	65	65	65	65	65	65	65	65	65	65	65	65	65	64	65	65	60	65	63	57	65	59	54	65	54	49	64	50	45	59	46	42	55	42	38	52	40	36	49	37	34
		7:12	30.3	Non-Exposed	66	66	66	66	66	66	66	66	66	66	66	66	66	66	66	66	66	66	66	66	66	66	66	66	66	66	66	66	66	64	64	64	59	63	62	54	61	58	51	59	54	47
				Exposed	66	66	66	66	66	66	66	66	66	66	66	66	66	66	66	66	66	65	66	66	62	66	66	59	66	62	54	62	56	49	57	52	46	53	48	42	49	45	40	46	42	37
		8:12	33.7	Non-Exposed	67	67	67	67	67	67	67	67	67	67	67	67	67	67	67	67	67	67	67	67	67	67	67	67	67	67	67	67	67	63	66	66	58	64	62	54	62	58	51	59	54	47
				Exposed	67	67	67	67	67	67	67	67	67	67	67	67	67	67	67	67	67	65	67	67	62	67	67	59	67	61	54	62	56	49	57	52	46	53	48	42	49	45	39	46	42	37
		9:12	36.9	Non-Exposed	68	68	68	68	68	68	68	68	68	68	68	68	68	68	68	68	68	68	68	68	68	68	68	68	68	68	68	68	68	63	67	66	58	65	62	54	63	58	50	59	54	47
				Exposed	68	68	68	68	68	68	68	68	68	68	68	68	68	68	68	68	68	65	68	68	61	68	67	59	67	61	54	62	56	49	57	52	45	52	48	42	49	45	39	45	42	37
		10:12	39.8	Non-Exposed	70	70	70	70	70	70	70	70	70	70	70	70	70	70	70	70	70	70	70	70	70	70	70	70	70	70	68	70	70	63	68	66	58	67	61	54	63	57	50	59	54	47
				Exposed	70	70	70	70	70	70	70	70	70	70	70	70	70	70	68	70	70	64	70	70	61	70	67	58	67	61	53	61	56	49	56	52	45	52	48	42	49	45	39	45	42	37
		11:12	42.5	Non-Exposed	71	71	71	71	71	71	71	71	71	71	71	71	71	71	71	71	71	71	71	71	71	71	71	71	71	71	68	71	71	63	70	66	58	68	61	54	63	57	50	59	54	47
				Exposed	71	71	71	71	71	71	71	71	71	71	71	71	71	71	68	71	71	64	71	70	61	71	66	58	67	61	53	61	56	49	56	52	45	52	48	42	49	45	39	45	42	37
		12:12	45	Non-Exposed	73	73	73	73	73	73	73	73	73	73	73	73	73	73	73	73	73	73	73	73	73	73	73	73	73	73	68	73	71	62	71	66	58	67	61	54	63	57	50	58	54	47
				Exposed	73	73	73	73	73	73	73	73	73	73	73	71	73	73	67	73	73	64	73	69	61	73	66	58	67	61	53	61	56	49	56	52	45	52	48	42	48	45	39	45	42	37
	C	Flat	0	Non-Exposed	68	68	68	68	68	68	68	68	68	68	68	66	68	68	63	68	68	59	68	68	56	68	65	54	68	59	49	66	54	45	61	50	41	56	47	38	52	44	36	49	41	34
				Exposed	68	68	62	68	68	58	68	66	54	68	62	51	68	59	48	67	56	46	64	53	44	61	51	42	56	46	38	51	42	35	47	39	33	44	37	0	41	34	0	38	32	0
		1:12	4.8	Non-Exposed	65	65	65	65	65	65	65	65	65	65	65	65	65	65	62	65	65	59	65	65	56	65	65	53	65	59	49	65	54	45	60	50	41	56	47	38	52	43	36	49	41	34
				Exposed	65	65	61	65	65	58	65	65	54	65	62	51	65	59	48	65	56	46	64	53	44	61	50	41	55	46	38	51	42	35	47	39	33	44	36	0	41	34	0	38	32	0
		2:12	9.5	Non-Exposed	63	63	63	63	63	63	63	63	63	63	63	63	63	63	59	63	63	56	63	59	53	63	56	50	62	51	46	57	47	42	53	43	38	49	40	36	46	37	33	44	35	32
				Exposed	63	63	58	63	61	54	63	57	51	63	54	48	61	51	45	58	48	43	56	46	41	53	43	39	49	39	35	45	36	33	42	34	0	39	32	0	37	0	0	35	0	0
		3:12	14.0	Non-Exposed	61	61	61	61	61	61	61	61	61	61	61	61	61	61	59	61	61	56	61	59	53	61	56	50	61	51	45	57	47	42	53	43	38	49	40	35	46	37	33	43	35	32
				Exposed	61	61	58	61	61	54	61	57	51	61	54	48	61	51	45	58	48	43	56	46	41	53	43	39	49	39	35	45	36	33	42	34	0	39	32	0	37	0	0	35	0	0
		4:12	18.4	Non-Exposed	64	64	64	64	64	64	64	64	64	64	64	62	64	64	59	64	62	55	64	59	53	64	56	50	61	51	45	57	47	42	53	43	38	49	40	35	46	37	33	43	35	32
				Exposed	64	64	58	64	61	54	64	57	51	64	53	48	61	51	45	58	48	43	55	45	40	53	43	39	49	39	35	45	36	33	42	34	0	39	32	0	37	0	0	35	0	0
		5:12	22.6	Non-Exposed	64	64	64	64	64	64	64	64	64	64	64	64	64	64	64	64	64	64	64	64	60	64	62	57	64	57	52	64	52	47	62	48	44	58	44	40	54	41	37	51	39	35
				Exposed	64	64	64	64	64	62	64	63	58	64	60	54	64	56	51	64	53	49	64	51	46	62	48	44	57	44	40	53	40	36	49	37	34	46	35	31	43	33	0	41	0	0
		6:12	26.6	Non-Exposed	65	65	65	65	65	65	65	65	65	65	65	65	65	65	65	65	65	63	65	65	60	65	62	57	65	57	52	65	52	47	61	48	43	57	44	40	54	41	37	51	39	35
				Exposed	65	65	65	65	65	62	65	63	58	65	59	54	65	56	51	65	53	48	65	51	46	62	48	44	57	44	40	53	40	36	49	37	34	46	35	31	43	33	0	40	0	0
		7:12	30.3	Non-Exposed	66	66	66	66	66	66	66	66	66	66	66	66	66	66	66	66	66	66	66	66	65	65	65	62	64	64	56	62	59	52	60	54	48	55	50	44	51	47	41	48	44	39
				Exposed	66	66	66	66	66	66	66	66	62	66	66	59	66	64	56	66	60	53	63	57	50	60	55	48	54	50	44	50	46	40	46	42	37	42	39	35	39	37	32	37	35	0
		8:12	33.7	Non-Exposed	67	67	67	67	67	67	67	67	67	67	67	67	67	67	67	67	67	67	67	67	64	67	67	61	65	64	56	63	59	51	59	54	47	55	50	44	51	47	41	48	44	38
				Exposed	67	67	67	67	67	66	67	67	62	67	67	59	67	63	56	66	60	53	63	57	50	60	55	48	54	50	44	50	46	40	46	42	37	42	39	35	39	37	32	37	35	0
		9:12	36.9	Non-Exposed	68	68	68	68	68	68	68	68	68	68	68	68	68	68	68	68	68	67	68	68	64	68	68	61	66	64	56	64	58	51	59	54	47	55	50	44	51	47	41	47	44	38
				Exposed	68	68	68	68	68	66	68	68	62	68	67	58	68	63	55	66	60	53	63	57	50	60	54	48	54	50	44	50	46	40	46	42	37	42	39	34	39	37	32	37	34	0
		10:12	39.8	Non-Exposed	70	70	70	70	70	70	70	70	70	70	70	70	70	70	70	70	70	67	70	70	64	70	69	61	67	63	56	64	58	51	59	54	47	55	50	44	51	47	41	47	44	38
				Exposed	70	70	70	70	70	65	70	70	62	70	66	58	69	63	55	66	60	52	62	57	50	59	54	48	54	50	43	49	46	40	46	42	37	42	39	34	39	37	32	37	34	0
		11:12	42.5	Non-Exposed	71	71	71	71	71	71	71	71	71	71	71	71	71	71	70	71	71	67	71	71	64	71	69	61	69	63	56	64	58	51	59	54	47	54	50	44	51	47	41	47	44	38
				Exposed	71	71	69	71	71	65	71	70	62	71	66	58	69	63	55	66	60	52	62	57	50	59	54	47	54	50	43	49	46	40	45	42	37	42	39	34	39	37	32	37	34	0
		12:12	45	Non-Exposed	73	73	73	73	73	73	73	73	73	73	73	73	73	73	70	73	73	67	73	72	63	73	69	61	69	63	55	64	58	51	59	54	47	54	50	44	51	47	41	47	44	38
				Exposed	73	73	69	73	73	65	73	70	61	73	66	58	69	63	55	65	59	52	62	57	50	59	54	47	54	49	43	49	46	40	45	42	37	42	39	34	39	37	32	37	34	0
	D	Flat	0	Non-Exposed	68	68	68	68	68	67	68	68	63	68	68	59	68	68	56	68	65	53	68	61	51	68	58	48	65	53	44	59	49	40	55	45	37	51	42	35	47	39	33	44	37	0
				Exposed	68	67	55	68	63	52	68	59	49	68	56	46	64	53	44	61	50	41	58	48	39	55	46	37	50	42	34	46	38	32	43	36	0	40	33	0	37	31	0	35	0	0
		1:12	4.8	Non-Exposed	65	65	65	65	65	65	65	65	63	65	65	59	65	65	56	65	64	53	65	61	50	65	58	48	64	53	44	59	49	40	54	45	37	51	42	35	47	39	33	44	37	0
				Exposed	65	65	55	65	63	52	65	59	49	65	56	46	64	53	43	60	50	41	57	48	39	55	45	37	50	42	34	46	38	32	43	35	0	40	33	0	37	31	0	35	0	0
		2:12	9.5	Non-Exposed	63	63	63	63	63	63	63	63	60	63	63	56	63	59	53	63	56	50	63	53	47	61	51	45	56	46	41	52	42	37	48	39	35	45	36	33	42	34	0	40	32	0
				Exposed	63	58	52	63	55	49	62	51	46	59	48	43	56	46	41	53	43	38	51	41	36	48	39	35	45	35	32	41	33	0	38	0	0	36	0	0	34	0	0	32	0	0
		3:12	14.0	Non-Exposed	61	61	61	61	61	61	61	61	59	61	61	56	61	59	53	61	56	50	61	53	47	61	50	45	56	46	41	52	42	37	48	39	35	45	36	33	42	34	0	40	32	0
				Exposed	61	58	52	61	54	49	61	51	46	58	48	43	55	45	41	53	43	38	50	41	36	48	39	35	44	35	32	41	33	0	38	0	0	36	0	0	34	0	0	32	0	0
		4:12	18.4	Non-Exposed	64	64	64	64	64	63	64	64	59	64	62	56	64	59	52	64	56	50	63	53	47	61	50	45	56	46	41	51	42	37	48	39	35	45	36	32	42	34	0	39	32	0
				Exposed	64	58	52	64	54	48	61	51	45	58	48	43	55	45	40	53	43	38	50	41	36	48	39	35	44	35	32	41	33	0	38	0	0	36	0	0	34	0	0	32	0	0
		5:12	22.6	Non-Exposed	64	64	64	64	64	64	64	64	64	64	64	64	64	64	60	64	62	57	64	59	54	64	56	51	64	51	46	60	47	42	56	43	39	52	40	36	49	37	34	46	35	32
				Exposed	64	64	59	64	60	55	64	57	52	64	54	49	64	51	46	62	48	44	59	46	41	56	43	39	52	40	36	48	36	33	45	34	31	42	32	0	39	0	0	37	0	0
		6:12	26.6	Non-Exposed	65	65	65	65	65	65	65	65	65	65	65	63	65	65	60	65	62	57	65	59	54	65	56	51	65	51	46	60	47	42	56	43	39	52	40	36	49	37	34	46	35	32
				Exposed	65	64	59	65	60	55	65	57	52	65	53	49	64	50	46	61	48	43	59	45	41	56	43	39	52	39	36	48	36	33	45	34	0	42	32	0	39	0	0	37	0	0
		7:12	30.3	Non-Exposed	66	66	66	66	66	66	66	66	66	66	66	66	66	66	65	65	65	61	64	64	58	63	63	55	61	58	51	58	53	46	53	49	43	49	46	40	46	42	37	43	40	35
				Exposed	66	66	64	66	66	60	66	64	56	66	61	53	63	57	50	60	54	48	57	52	45	54	49	43	49	45	39	45	41	36	41	38	34	38	36	31	35	34	0	33	32	0
		8:12	33.7	Non-Exposed	67	67	67	67	67	67	67	67	67	67	67	67	67	67	64	67	67	61	65	65	58	64	63	55	62	58	50	58	53	46	53	49	43	49	45	40	46	42	37	43	40	35
				Exposed	67	67	63	67	67	59	67	64	56	67	60	53	63	57	50	59	54	48	56	52	45	54	49	43	49	45	39	45	41	36	41	38	34	38	36	31	35	33	0	33	32	0
		9:12	36.9	Non-Exposed	68	68	68	68	68	68	68	68	68	68	68	68	68	68	64	68	68	61	67	66	58	66	63	55	63	57	50	58	53	46	53	49	43	49	45	40	46	42	37	43	40	35
				Exposed	68	68	63	68	68	59	68	64	56	66	60	53	63	57	50	59	54	47	56	52	45	53	49	43	49	45	39	45	41	36	41	38	34	38	35	31	35	33	0	33	32	0
		10:12	39.8	Non-Exposed	70	70	70	70	70	70	70	70	70	70	70	67	70	70	64	69	69	61	68	66	58	67	63	55	63	57	50	58	53	46	53	49	43	49	45	40	46	42	37	43	40	35
				Exposed	70	70	63	70	67	59	70	63	56	66	60	53	62	57	50	59	54	47	56	51	45	53	49	43	49	45	39	44	41	36	41	38	34	38	35	31	35	33	0	33	32	0
		11:12	42.5	Non-Exposed	71	71	71	71	71	71	71	71	71	71	71	67	71	71	64	71	69	60	70	65	58	68	62	55	63	57	50	57	53	46	53	49	43	49	45	40	46	42	37	43	40	35
				Exposed	71	71	63	71	67	59	70	63	56	66	60	53	62	57	50	59	54	47	56	51	45	53	49	43	48	45	39	44	41	36	41	38	34	38	35	31	35	33	0	33	32	0
		12:12	45	Non-Exposed	73	73	73	73	73	73	73	73	71	73	73	67	73	72	63	72	69	60	71	65	57	69	62	55	62	57	50	57	52	46	53	49	43	49	45	40	45	42	37	42	39	35
				Exposed	73	71	63	73	67	59	70	63	55	66	60	52	62	57	50	59	54	47	56	51	45	53	49	43	48	45	39	44	41	36	41	38	34	38	35	31	35	33	0	33	32	0

Tamarack 2.3 Rail – Gable Flush-Mount on 30 Foot Maximum Mean Roof Height – Portrait – Panel Length = 80 Inches or Less

Ground Snow Load	Exposure Category	Roof Pitch	Roof Angle	Wind Speed (mph)	95			100			105			110			115			120			125			130			140			150			160			170			180			190		
				Roof Area	1	2	3	1	2	3	1	2	3	1	2	3	1	2	3	1	2	3	1	2	3	1	2	3	1	2	3	1	2	3	1	2	3	1	2	3	1	2	3	1	2	3
20	B	Flat	0	Non-Exposed	63	63	63	63	63	63	63	63	63	63	63	63	63	63	63	63	63	63	63	63	63	63	63	63	63	63	60	63	63	55	63	62	51	63	57	47	63	53	44	60	50	41
				Exposed	63	63	63	63	63	63	63	63	63	63	63	63	63	63	60	63	63	57	63	63	54	63	62	51	63	57	47	63	52	43	58	48	40	54	45	37	50	42	34	47	39	33
		1:12	4.8	Non-Exposed	60	60	60	60	60	60	60	60	60	60	60	60	60	60	60	60	60	60	60	60	60	60	60	60	60	60	60	60	60	55	60	60	51	60	57	47	60	53	44	60	50	41
				Exposed	60	60	60	60	60	60	60	60	60	60	60	60	60	60	60	60	60	57	60	60	54	60	60	51	60	57	47	60	52	43	58	48	40	54	45	37	50	42	34	47	39	33
		2:12	9.5	Non-Exposed	57	57	57	57	57	57	57	57	57	57	57	57	57	57	57	57	57	57	57	57	57	57	57	57	57	57	57	57	57	52	57	54	48	57	50	44	56	46	41	53	43	38
				Exposed	57	57	57	57	57	57	57	57	57	57	57	57	57	57	56	57	57	53	57	57	51	57	54	48	57	49	44	55	45	40	51	41	37	48	38	34	45	36	32	42	34	0
		3:12	14.0	Non-Exposed	55	55	55	55	55	55	55	55	55	55	55	55	55	55	55	55	55	55	55	55	55	55	55	55	55	55	55	55	55	52	55	53	48	55	49	44	55	46	41	53	43	38
				Exposed	55	55	55	55	55	55	55	55	55	55	55	55	55	55	55	55	55	53	55	55	50	55	54	48	55	49	44	55	45	40	51	41	37	47	38	34	44	35	32	42	34	0
		4:12	18.4	Non-Exposed	59	59	59	59	59	59	59	59	59	59	59	59	59	59	59	59	59	59	59	59	59	59	59	59	59	59	56	59	58	52	59	53	47	59	49	44	56	46	41	52	43	38
				Exposed	59	59	59	59	59	59	59	59	59	59	59	59	59	59	56	59	59	53	59	56	50	59	54	48	59	49	43	54	45	40	51	41	37	47	38	34	44	35	32	42	33	0
		5:12	22.6	Non-Exposed	59	59	59	59	59	59	59	59	59	59	59	59	59	59	59	59	59	59	59	59	59	59	59	59	59	59	59	59	59	59	59	59	54	59	55	50	59	51	47	59	48	43
				Exposed	59	59	59	59	59	59	59	59	59	59	59	59	59	59	59	59	59	59	59	59	58	59	59	55	59	54	50	59	50	45	59	46	42	55	43	39	52	40	36	49	37	34
		6:12	26.6	Non-Exposed	60	60	60	60	60	60	60	60	60	60	60	60	60	60	60	60	60	60	60	60	60	60	60	60	60	60	60	60	60	59	60	59	54	60	55	50	60	51	46	60	48	43
				Exposed	60	60	60	60	60	60	60	60	60	60	60	60	60	60	60	60	60	60	60	60	57	60	59	54	60	54	49	60	50	45	59	46	42	55	42	38	52	40	36	49	37	34
		7:12	30.3	Non-Exposed	61	61	61	61	61	61	61	61	61	61	61	61	61	61	61	61	61	61	61	61	61	61	61	61	61	61	61	61	61	61	60	60	59	58	58	54	57	57	51	56	54	47
				Exposed	61	61	61	61	61	61	61	61	61	61	61	61	61	61	61	61	61	61	61	61	61	61	61	59	61	61	54	61	56	49	57	52	46	53	48	42	49	45	40	46	42	37
		8:12	33.7	Non-Exposed	63	63	63	63	63	63	63	63	63	63	63	63	63	63	63	63	63	63	63	63	63	63	63	63	63	63	63	62	62	62	61	61	58	60	60	54	58	58	51	57	54	47
				Exposed	63	63	63	63	63	63	63	63	63	63	63	63	63	63	63	63	63	62	63	63	59	63	61	54	62	56	49	57	52	46	53	48	42	49	45	39	46	42	37
		9:12	36.9	Non-Exposed	64	64	64	64	64	64	64	64	64	64	64	64	64	64	64	64	64	64	64	64	64	64	64	64	64	64	64	64	64	63	63	63	58	61	61	54	60	58	50	58	54	47
				Exposed	64	64	64	64	64	64	64	64	64	64	64	64	64	64	64	64	64	64	64	64	61	64	64	59	64	61	54	62	56	49	57	52	45	52	48	42	49	45	39	45	42	37
		10:12	39.8	Non-Exposed	66	66	66	66	66	66	66	66	66	66	66	66	66	66	66	66	66	66	66	66	66	66	66	66	66	66	66	66	66	63	64	64	58	63	61	54	61	57	50	59	54	47
				Exposed	66	66	66	66	66	66	66	66	66	66	66	66	66	66	66	66	66	64	66	66	61	66	66	58	66	61	53	61	56	49	56	52	45	52	48	42	49	45	39	45	42	37
		11:12	42.5	Non-Exposed	67	67	67	67	67	67	67	67	67	67	67	67	67	67	67	67	67	67	67	67	67	67	67	67	67	67	67	67	67	63	66	66	58	64	61	54	63	57	50	59	54	47
				Exposed	67	67	67	67	67	67	67	67	67	67	67	67	67	67	67	67	67	64	67	67	61	67	66	58	67	61	53	61	56	49	56	52	45	52	48	42	49	45	39	45	42	37
		12:12	45	Non-Exposed	69	69	69	69	69	69	69	69	69	69	69	69	69	69	69	69	69	69	69	69	69	69	69	69	69	69	68	69	69	62	67	66	58	66	61	54	63	57	50	58	54	47
				Exposed	69	69	69	69	69	69	69	69	69	69	69	69	69	69	67	69	69	64	69	69	61	69	66	58	67	61	53	61	56	49	56	52	45	52	48	42	48	45	39	45	42	37
	C	Flat	0	Non-Exposed	63	63	63	63	63	63	63	63	63	63	63	63	63	63	63	63	63	59	63	63	56	63	63	54	63	59	49	63	54	45	61	50	41	56	47	38	52	44	36	49	41	34
				Exposed	63	63	62	63	63	58	63	63	54	63	62	51	63	59	48	63	56	46	63	53	44	61	51	42	56	46	38	51	42	35	47	39	33	44	37	0	41	34	0	38	32	0
		1:12	4.8	Non-Exposed	60	60	60	60	60	60	60	60	60	60	60	60	60	60	60	60	60	59	60	60	56	60	60	53	60	59	49	60	54	45	60	50	41	56	47	38	52	43	36	49	41	34
				Exposed	60	60	60	60	60	58	60	60	54	60	60	51	60	59	48	60	56	46	60	53	44	60	50	41	55	46	38	51	42	35	47	39	33	44	36	0	41	34	0	38	32	0
		2:12	9.5	Non-Exposed	57	57	57	57	57	57	57	57	57	57	57	57	57	57	57	57	57	56	57	57	53	57	56	50	57	51	46	57	47	42	53	43	38	49	40	36	46	37	33	44	35	32
				Exposed	57	57	57	57	57	54	57	57	51	57	54	48	57	51	45	57	48	43	56	46	41	53	43	39	49	39	35	45	36	33	42	34	0	39	32	0	37	0	0	35	0	0
		3:12	14.0	Non-Exposed	55	55	55	55	55	55	55	55	55	55	55	55	55	55	55	55	55	55	55	55	53	55	55	50	55	51	45	55	47	42	53	43	38	49	40	35	46	37	33	43	35	32
				Exposed	55	55	55	55	55	54	55	55	51	55	54	48	55	51	45	55	48	43	55	46	41	53	43	39	49	39	35	45	36	33	42	34	0	39	32	0	37	0	0	35	0	0
		4:12	18.4	Non-Exposed	59	59	59	59	59	59	59	59	59	59	59	59	59	59	59	59	59	55	59	59	53	59	56	50	59	51	45	57	47	42	53	43	38	49	40	35	46	37	33	43	35	32
				Exposed	59	59	58	59	59	54	59	57	51	59	53	48	59	51	45	58	48	43	55	45	40	53	43	39	49	39	35	45	36	33	42	34	0	39	32	0	37	0	0	35	0	0
		5:12	22.6	Non-Exposed	59	59	59	59	59	59	59	59	59	59	59	59	59	59	59	59	59	59	59	59	59	59	59	57	59	57	52	59	52	47	59	48	44	58	44	40	54	41	37	51	39	35
				Exposed	59	59	59	59	59	59	59	59	58	59	59	54	59	56	51	59	53	49	59	51	46	59	48	44	57	44	40	53	40	36	49	37	34	46	35	31	43	33	0	41	0	0
		6:12	26.6	Non-Exposed	60	60	60	60	60	60	60	60	60	60	60	60	60	60	60	60	60	60	60	60	60	60	60	57	60	57	52	60	52	47	60	48	43	57	44	40	54	41	37	51	39	35
				Exposed	60	60	60	60	60	60	60	60	58	60	59	54	60	56	51	60	53	48	60	51	46	60	48	44	57	44	40	53	40	36	49	37	34	46	35	31	43	33	0	40	0	0
		7:12	30.3	Non-Exposed	61	61	61	61	61	61	61	61	61	61	61	61	61	61	61	61	61	61	61	61	61	60	60	60	59	59	56	57	57	52	56	54	48	54	50	44	51	47	41	48	44	39
				Exposed	61	61	61	61	61	61	61	61	61	61	61	59	61	61	56	61	60	53	61	57	50	60	55	48	54	50	44	50	46	40	46	42	37	42	39	35	39	37	32	37	35	0
		8:12	33.7	Non-Exposed	63	63	63	63	63	63	63	63	63	63	63	63	63	63	63	63	63	63	63	63	63	62	62	61	60	60	56	59	59	51	57	54	47	55	50	44	51	47	41	48	44	38
				Exposed	63	63	63	63	63	63	63	63	62	63	63	59	63	63	56	63	60	53	63	57	50	60	55	48	54	50	44	50	46	40	46	42	37	42	39	35	39	37	32	37	35	0
		9:12	36.9	Non-Exposed	64	64	64	64	64	64	64	64	64	64	64	64	64	64	64	64	64	64	64	64	64	63	63	61	62	62	56	60	58	51	58	54	47	55	50	44	51	47	41	47	44	38
				Exposed	64	64	64	64	64	64	64	64	62	64	64	58	64	63	55	64	60	53	63	57	50	60	54	48	54	50	44	50	46	40	46	42	37	42	39	34	39	37	32	37	34	0
		10:12	39.8	Non-Exposed	66	66	66	66	66	66	66	66	66	66	66	66	66	66	66	66	66	66	66	66	64	65	65	61	63	63	56	61	58	51	59	54	47	55	50	44	51	47	41	47	44	38
				Exposed	66	66	66	66	66	65	66	66	62	66	66	58	66	63	55	66	60	52	62	57	50	59	54	48	54	50	43	49	46	40	46	42	37	42	39	34	39	37	32	37	34	0
		11:12	42.5	Non-Exposed	67	67	67	67	67	67	67	67	67	67	67	67	67	67	67	67	67	67	67	67	64	67	67	61	65	63	56	63	58	51	59	54	47	54	50	44	51	47	41	47	44	38
				Exposed	67	67	67	67	67	65	67	67	62	67	66	58	67	63	55	66	60	52	62	57	50	59	54	47	54	50	43	49	46	40	45	42	37	42	39	34	39	37	32	37	34	0
		12:12	45	Non-Exposed	69	69	69	69	69	69	69	69	69	69	69	69	69	69	69	69	69	67	69	69	63	69	69	61	66	63	55	64	58	51	59	54	47	54	50	44	51	47	41	47	44	38
				Exposed	69	69	69	69	69	65	69	69	61	69	66	58	69	63	55	65	59	52	62	57	50	59	54	47	54	49	43	49	46	40	45	42	37	42	39	34	39	37	32	37	34	0
	D	Flat	0	Non-Exposed	63	63	63	63	63	63	63	63	63	63	63	59	63	63	56	63	63	53	63	61	51	63	58	48	63	53	44	59	49	40	55	45	37	51	42	35	47	39	33	44	37	0
				Exposed	63	63	55	63	63	52	63	59	49	63	56	46	63	53	44	61	50	41	58	48	39	55	46	37	50	42	34	46	38	32	43	36	0	40	33	0	37	31	0	35	0	0
		1:12	4.8	Non-Exposed	60	60	60	60	60	60	60	60	60	60	60	59	60	60	56	60	60	53	60	60	50	60	58	48	60	53	44	59	49	40	54	45	37	51	42	35	47	39	33	44	37	0
				Exposed	60	60	55	60	60	52	60	59	49	60	56	46	60	53	43	60	50	41	57	48	39	55	45	37	50	42	34	46	38	32	43	35	0	40	33	0	37	31	0	35	0	0
		2:12	9.5	Non-Exposed	57	57	57	57	57	57	57	57	57	57	57	56	57	57	53	57	56	50	57	53	47	57	51	45	56	46	41	52	42	37	48	39	35	45	36	33	42	34	0	40	32	0
				Exposed	57	57	52	57	55	49	57	51	46	57	48	43	56	46	41	53	43	38	51	41	36	48	39	35	45	35	32	41	33	0	38	0	0	36	0	0	34	0	0	32	0	0
		3:12	14.0	Non-Exposed	55	55	55	55	55	55	55	55	55	55	55	55	55	55	53	55	55	50	55	53	47	55	50	45	55	46	41	52	42	37	48	39	35	45	36	33	42	34	0	40	32	0
				Exposed	55	55	52	55	54	49	55	51	46	55	48	43	55	45	41	53	43	38	50	41	36	48	39	35	44	35	32	41	33	0	38	0	0	36	0	0	34	0	0	32	0	0
		4:12	18.4	Non-Exposed	59	59	59	59	59	59	59	59	59	59	59	56	59	59	52	59	56	50	59	53	47	59	50	45	56	46	41	51	42	37	48	39	35	45	36	32	42	34	0	39	32	0
				Exposed	59	58	52	59	54	48	59	51	45	58	48	43	55	45	40	53	43	38	50	41	36	48	39	35	44	35	32	41	33	0	38	0	0	36	0	0	34	0	0	32	0	0
		5:12	22.6	Non-Exposed	59	59	59	59	59	59	59	59	59	59	59	59	59	59	59	59	59	57	59	59	54	59	56	51	59	51	46	59	47	42	56	43	39	52	40	36	49	37	34	46	35	32
				Exposed	59	59	59	59	59	55	59	57	52	59	54	49	59	51	46	59	48	44	59	46	41	56	43	39	52	40	36	48	36	33	45	34	31	42	32	0	39	0	0	37	0	0
		6:12	26.6	Non-Exposed	60	60	60	60	60	60	60	60	60	60	60	60	60	60	60	60	60	57	60	59	54	60	56	51	60	51	46	60	47	42	56	43	39	52	40	36	49	37	34	46	35	32
				Exposed	60	60	59	60	60	55	60	57	52	60	53	49	60	50	46	60	48	43	59	45	41	56	43	39	52	39	36	48	36	33	45	34	0	42	32	0	39	0	0	37	0	0
		7:12	30.3	Non-Exposed	61	61	61	61	61	61	61	61	61	61	61	61	61	61	61	60	60	60	60	60	58	59	59	55	57	57	51	55	53	46	53	49	43	49	46	40	46	42	37	43	40	35
				Exposed	61	61	61	61	61	60	61	61	56	61	61	53	61	57	50	60	54	48	57	52	45	54	49	43	49	45	39	45	41	36	41	38	34	38	36	31	35	34	0	33	32	0
		8:12	33.7	Non-Exposed	63	63	63	63	63	63	63	63	63	63	63	63	63	63	63	62	62	61	61	61	58	60	60	55	58	58	50	57	53	46	53	49	43	49	45	40	46	42	37	43	40	35
				Exposed	63	63	63	63	63	59	63	63	56	63	60	53	63	57	50	59	54	48	56	52	45	54	49	43	49	45	39	45	41	36	41	38	34	38	36	31	35	33	0	33	32	0
		9:12	36.9	Non-Exposed	64	64	64	64	64	64	64	64	64	64	64	64	64	64	63	63	61	62	62	58	62	62	55	60	57	50	58	53	46	53	49	43	49	45	40	46	42	37	43	40	35
				Exposed	64	64	63	64	64	59	64	64	56	64	60	53	63	57	50	59	54	47	56	52	45	53	49	43	49	45	39	45	41	36	41	38	34	38	35	31	35	33	0	33	32	0
		10:12	39.8	Non-Exposed	66	66	66	66	66	66	66	66	66	66	66	66	66	66	64	65	65	61	64	64	58	63	63	55	61	57	50	58	53	46	53	49	43	49	45	40	46	42	37	43	40	35
				Exposed	66	66	63	66	66	59	66	63	56	66	60	53	62	57	50	59	54	47	56	51	45	53	49	43	49	45	39	44	41	36	41	38	34	38	35	31	35	33	0	33	32	0
		11:12	42.5	Non-Exposed	67	67	67	67	67	67	67	67	67	67	67	67	67	67	64	67	67	60	66	65	58	65	62	55	62	57	50	57	53	46	53	49	43	49	45	40	46	42	37	43	40	35
				Exposed	67	67	63	67	67	59	67	63	56	66	60	53	62	57	50	59	54	47	56	51	45	53	49	43	48	45	39	44	41	36	41	38	34	38	35	31	35	33	0	33	32	0
		12:12	45	Non-Exposed	69	69	69	69	69	69	69	69	69	69	69	67	69	69	63	68	68	60	67	65	57	66	62	55	62	57	50	57	52	46	53	49	43	49	45	40	45	42	37	42	39	35
				Exposed	69	69	63	69	67	59	69	63	55	66	60	52	62	57	50	59	54	47	56	51	45	53	49	43	48	45	39	44	41	36	41	38	34	38	35	31	35	33	0	33	32	0

Tamarack 2.3 Rail – Gable Flush-Mount on 30 Foot Maximum Mean Roof Height – Portrait – Panel Length = 80 Inches or Less

Ground Snow Load	Exposure Category	Roof Pitch	Roof Angle	Wind Speed (mph)	95			100			105			110			115			120			125			130			140			150			160			170			180			190		
				Roof Area	1	2	3	1	2	3	1	2	3	1	2	3	1	2	3	1	2	3	1	2	3	1	2	3	1	2	3	1	2	3	1	2	3	1	2	3	1	2	3	1	2	3
25	B	Flat	0	Non-Exposed	62	62	62	62	62	62	62	62	62	62	62	62	62	62	62	62	62	62	62	62	62	62	62	62	62	62	60	62	62	55	62	62	51	62	57	47	62	53	44	60	50	41
				Exposed	62	62	62	62	62	62	62	62	62	62	62	62	62	62	60	62	62	57	62	62	54	62	62	51	62	57	47	62	52	43	58	48	40	54	45	37	50	42	34	47	39	33
		1:12	4.8	Non-Exposed	59	59	59	59	59	59	59	59	59	59	59	59	59	59	59	59	59	59	59	59	59	59	59	59	59	59	59	59	59	55	59	59	51	59	57	47	59	53	44	59	50	41
				Exposed	59	59	59	59	59	59	59	59	59	59	59	59	59	59	59	59	59	57	59	59	54	59	59	51	59	57	47	59	52	43	58	48	40	54	45	37	50	42	34	47	39	33
		2:12	9.5	Non-Exposed	56	56	56	56	56	56	56	56	56	56	56	56	56	56	56	56	56	56	56	56	56	56	56	56	56	56	56	56	56	52	56	54	48	56	50	44	56	46	41	53	43	38
				Exposed	56	56	56	56	56	56	56	56	56	56	56	56	56	56	56	56	56	53	56	56	51	56	54	48	56	49	44	55	45	40	51	41	37	48	38	34	45	36	32	42	34	0
		3:12	14.0	Non-Exposed	54	54	54	54	54	54	54	54	54	54	54	54	54	54	54	54	54	54	54	54	54	54	54	54	54	54	54	54	54	52	54	53	48	54	49	44	54	46	41	53	43	38
				Exposed	54	54	54	54	54	54	54	54	54	54	54	54	54	54	54	54	54	53	54	54	50	54	54	48	54	49	44	54	45	40	51	41	37	47	38	34	44	35	32	42	34	0
		4:12	18.4	Non-Exposed	54	54	54	54	54	54	54	54	54	54	54	54	54	54	54	54	54	54	54	54	54	54	54	54	54	54	54	54	54	52	54	53	47	54	49	44	54	46	41	52	43	38
				Exposed	54	54	54	54	54	54	54	54	54	54	54	54	54	54	54	54	54	53	54	54	50	54	54	48	54	49	43	54	45	40	51	41	37	47	38	34	44	35	32	42	33	0
		5:12	22.6	Non-Exposed	55	55	55	55	55	55	55	55	55	55	55	55	55	55	55	55	55	55	55	55	55	55	55	55	55	55	55	55	55	55	55	55	54	55	55	50	55	51	47	55	48	43
				Exposed	55	55	55	55	55	55	55	55	55	55	55	55	55	55	55	55	55	55	55	55	55	55	55	55	55	54	50	55	50	45	55	46	42	55	43	39	52	40	36	49	37	34
		6:12	26.6	Non-Exposed	56	56	56	56	56	56	56	56	56	56	56	56	56	56	56	56	56	56	56	56	56	56	56	56	56	56	56	56	56	56	56	56	54	56	55	50	56	51	46	56	48	43
				Exposed	56	56	56	56	56	56	56	56	56	56	56	56	56	56	56	56	56	56	56	56	54	56	54	49	56	50	45	56	46	42	55	42	38	52	40	36	49	37	34	47	37	34
		7:12	30.3	Non-Exposed	57	57	57	57	57	57	57	57	57	57	57	57	57	57	57	57	57	57	57	57	57	57	57	57	57	57	57	57	57	57	56	56	56	55	55	54	54	54	51	53	53	47
				Exposed	57	57	57	57	57	57	57	57	57	57	57	57	57	57	57	57	57	57	57	57	57	57	57	57	57	57	54	57	56	49	56	52	46	53	48	42	49	45	40	46	42	37
		8:12	33.7	Non-Exposed	59	59	59	59	59	59	59	59	59	59	59	59	59	59	59	59	59	59	59	59	59	59	59	59	59	59	59	58	58	58	57	57	57	56	56	54	55	55	51	54	54	47
				Exposed	59	59	59	59	59	59	59	59	59	59	59	59	59	59	59	59	59	59	59	59	59	59	59	59	59	59	54	58	56	49	57	52	46	53	48	42	49	45	39	46	42	37
		9:12	36.9	Non-Exposed	60	60	60	60	60	60	60	60	60	60	60	60	60	60	60	60	60	60	60	60	60	60	60	60	60	60	60	60	60	60	59	59	58	58	58	54	56	56	50	55	54	47
				Exposed	60	60	60	60	60	60	60	60	60	60	60	60	60	60	60	60	60	60	60	60	60	60	60	59	60	60	54	60	56	49	57	52	45	52	48	42	49	45	39	45	42	37
		10:12	39.8	Non-Exposed	62	62	62	62	62	62	62	62	62	62	62	62	62	62	62	62	62	62	62	62	62	62	62	62	62	62	62	62	62	62	61	61	58	59	59	54	58	57	50	57	54	47
				Exposed	62	62	62	62	62	62	62	62	62	62	62	62	62	62	62	62	62	62	62	62	61	62	62	58	62	61	53	61	56	49	56	52	45	52	48	42	49	45	39	45	42	37
		11:12	42.5	Non-Exposed	64	64	64	64	64	64	64	64	64	64	64	64	64	64	64	64	64	64	64	64	64	64	64	64	64	64	64	64	64	63	62	62	58	61	61	54	60	57	50	58	54	47
				Exposed	64	64	64	64	64	64	64	64	64	64	64	64	64	64	64	64	64	64	64	64	61	64	64	58	64	61	53	61	56	49	56	52	45	52	48	42	49	45	39	45	42	37
		12:12	45	Non-Exposed	66	66	66	66	66	66	66	66	66	66	66	66	66	66	66	66	66	66	66	66	66	66	66	66	66	66	66	66	66	62	64	64	58	63	61	54	61	57	50	58	54	47
				Exposed	66	66	66	66	66	66	66	66	66	66	66	66	66	66	66	66	66	64	66	66	61	66	66	58	66	61	53	61	56	49	56	52	45	52	48	42	48	45	39	45	42	37
	C	Flat	0	Non-Exposed	62	62	62	62	62	62	62	62	62	62	62	62	62	62	62	62	62	59	62	62	56	62	62	54	62	59	49	62	54	45	61	50	41	56	47	38	52	44	36	49	41	34
				Exposed	62	62	62	62	62	58	62	62	54	62	62	51	62	59	48	62	56	46	62	53	44	61	51	42	56	46	38	51	42	35	47	39	33	44	37	0	41	34	0	38	32	0
		1:12	4.8	Non-Exposed	59	59	59	59	59	59	59	59	59	59	59	59	59	59	59	59	59	59	59	59	56	59	59	53	59	59	49	59	54	45	59	50	41	56	47	38	52	43	36	49	41	34
				Exposed	59	59	59	59	59	58	59	59	54	59	59	51	59	59	48	59	56	46	59	53	44	59	50	41	55	46	38	51	42	35	47	39	33	44	36	0	41	34	0	38	32	0
		2:12	9.5	Non-Exposed	56	56	56	56	56	56	56	56	56	56	56	56	56	56	56	56	56	56	56	56	53	56	56	50	56	51	46	56	47	42	53	43	38	49	40	36	46	37	33	44	35	32
				Exposed	56	56	56	56	56	54	56	56	51	56	54	48	56	51	45	56	48	43	56	46	41	53	43	39	49	39	35	45	36	33	42	34	0	39	32	0	37	0	0	35	0	0
		3:12	14.0	Non-Exposed	54	54	54	54	54	54	54	54	54	54	54	54	54	54	54	54	54	54	54	54	53	54	54	50	54	51	45	54	47	42	53	43	38	49	40	35	46	37	33	43	35	32
				Exposed	54	54	54	54	54	54	54	54	51	54	54	48	54	51	45	54	48	43	54	46	41	53	43	39	49	39	35	45	36	33	42	34	0	39	32	0	37	0	0	35	0	0
		4:12	18.4	Non-Exposed	54	54	54	54	54	54	54	54	54	54	54	54	54	54	54	54	54	54	54	54	53	54	54	50	54	51	45	54	47	42	53	43	38	49	40	35	46	37	33	43	35	32
				Exposed	54	54	54	54	54	54	54	54	51	54	53	48	54	51	45	54	48	43	54	46	40	53	43	39	49	39	35	45	36	33	42	34	0	39	32	0	37	0	0	35	0	0
		5:12	22.6	Non-Exposed	55	55	55	55	55	55	55	55	55	55	55	55	55	55	55	55	55	55	55	55	55	55	55	55	55	55	52	55	52	47	55	48	44	54	44	40	53	41	37	51	39	35
				Exposed	55	55	55	55	55	55	55	55	55	55	55	54	55	55	51	55	53	49	55	51	46	55	48	44	55	44	40	53	40	36	49	37	34	46	35	31	43	33	0	41	0	0
		6:12	26.6	Non-Exposed	56	56	56	56	56	56	56	56	56	56	56	56	56	56	56	56	56	56	56	56	56	56	56	56	56	56	52	56	52	47	56	48	43	55	44	40	54	41	37	51	39	35
				Exposed	56	56	56	56	56	56	56	56	56	56	56	54	56	56	51	56	53	48	56	51	46	56	48	44	56	44	40	53	40	36	49	37	34	46	35	31	43	33	0	40	0	0
		7:12	30.3	Non-Exposed	57	57	57	57	57	57	57	57	57	57	57	57	57	57	57	57	57	57	57	57	57	57	57	57	55	55	55	54	54	52	53	53	48	51	50	44	50	47	41	48	44	39
				Exposed	57	57	57	57	57	57	57	57	57	57	57	57	57	57	56	57	57	53	57	57	50	57	55	48	54	50	44	50	46	40	46	42	37	42	39	35	39	37	32	37	35	0
		8:12	33.7	Non-Exposed	59	59	59	59	59	59	59	59	59	59	59	59	59	59	59	59	59	59	59	59	59	58	58	58	57	57	56	55	55	51	54	54	47	53	50	44	51	47	41	48	44	38
				Exposed	59	59	59	59	59	59	59	59	59	59	59	59	59	59	56	59	59	53	59	57	50	58	55	48	54	50	44	50	46	40	46	42	37	42	39	35	39	37	32	37	35	0
		9:12	36.9	Non-Exposed	60	60	60	60	60	60	60	60	60	60	60	60	60	60	60	60	60	60	60	60	60	60	60	60	58	58	56	57	57	51	55	54	47	54	50	44	51	47	41	47	44	38
				Exposed	60	60	60	60	60	60	60	60	60	60	60	58	60	60	55	60	60	53	60	57	50	60	54	48	54	50	44	50	46	40	46	42	37	42	39	34	39	37	32	37	34	0
		10:12	39.8	Non-Exposed	62	62	62	62	62	62	62	62	62	62	62	62	62	62	62	62	62	62	62	62	62	61	61	61	60	60	56	58	58	51	57	54	47	55	50	44	51	47	41	47	44	38
				Exposed	62	62	62	62	62	62	62	62	62	62	62	58	62	62	55	62	60	52	62	57	50	59	54	48	54	50	43	49	46	40	46	42	37	42	39	34	39	37	32	37	34	0
		11:12	42.5	Non-Exposed	64	64	64	64	64	64	64	64	64	64	64	64	64	64	64	64	64	64	64	64	64	63	63	61	62	62	56	60	58	51	58	54	47	54	50	44	51	47	41	47	44	38
				Exposed	64	64	64	64	64	64	64	64	62	64	64	58	64	63	55	64	60	52	62	57	50	59	54	47	54	50	43	49	46	40	45	42	37	42	39	34	39	37	32	37	34	0
		12:12	45	Non-Exposed	66	66	66	66	66	66	66	66	66	66	66	66	66	66	66	66	66	66	66	66	63	65	65	61	63	63	55	61	58	51	59	54	47	54	50	44	51	47	41	47	44	38
				Exposed	66	66	66	66	66	65	66	66	61	66	66	58	66	63	55	65	59	52	62	57	50	59	54	47	54	49	43	49	46	40	45	42	37	42	39	34	39	37	32	37	34	0
	D	Flat	0	Non-Exposed	62	62	62	62	62	62	62	62	62	62	62	59	62	62	56	62	62	53	62	61	51	62	58	48	62	53	44	59	49	40	55	45	37	51	42	35	47	39	33	44	37	0
				Exposed	62	62	55	62	62	52	62	59	49	62	56	46	62	53	44	61	50	41	58	48	39	55	46	37	50	42	34	46	38	32	43	36	0	40	33	0	37	31	0	35	0	0
		1:12	4.8	Non-Exposed	59	59	59	59	59	59	59	59	59	59	59	59	59	59	56	59	59	53	59	59	50	59	58	48	59	53	44	59	49	40	54	45	37	51	42	35	47	39	33	44	37	0
				Exposed	59	59	55	59	59	52	59	59	49	59	56	46	59	53	43	59	50	41	57	48	39	55	45	37	50	42	34	46	38	32	43	35	0	40	33	0	37	31	0	35	0	0
		2:12	9.5	Non-Exposed	56	56	56	56	56	56	56	56	56	56	56	56	56	56	53	56	56	50	56	53	47	56	51	45	56	46	41	52	42	37	48	39	35	45	36	33	42	34	0	40	32	0
				Exposed	56	56	52	56	55	49	56	51	46	56	48	43	56	46	41	53	43	38	51	41	36	48	39	35	45	35	32	41	33	0	38	0	0	36	0	0	34	0	0	32	0	0
		3:12	14.0	Non-Exposed	54	54	54	54	54	54	54	54	54	54	54	54	54	54	53	54	54	50	54	53	47	54	50	45	54	46	41	52	42	37	48	39	35	45	36	33	42	34	0	40	32	0
				Exposed	54	54	52	54	54	49	54	51	46	54	48	43	54	45	41	53	43	38	50	41	36	48	39	35	44	35	32	41	33	0	38	0	0	36	0	0	34	0	0	32	0	0
		4:12	18.4	Non-Exposed	54	54	54	54	54	54	54	54	54	54	54	54	54	54	52	54	54	50	54	53	47	54	50	45	54	46	41	51	42	37	48	39	35	45	36	32	42	34	0	39	32	0
				Exposed	54	54	52	54	54	48	54	51	45	54	48	43	54	45	40	53	43	38	50	41	36	48	39	35	44	35	32	41	33	0	38	0	0	36	0	0	34	0	0	32	0	0
		5:12	22.6	Non-Exposed	55	55	55	55	55	55	55	55	55	55	55	55	55	55	55	55	55	55	55	55	54	55	55	51	55	51	46	55	47	42	54	43	39	52	40	36	49	37	34	46	35	32
				Exposed	55	55	55	55	55	55	55	55	52	55	54	49	55	51	46	55	48	44	55	46	41	55	43	39	52	40	36	48	36	33	45	34	31	42	32	0	39	0	0	37	0	0
		6:12	26.6	Non-Exposed	56	56	56	56	56	56	56	56	56	56	56	56	56	56	56	56	56	56	56	56	54	56	56	51	56	51	46	56	47	42	55	43	39	52	40	36	49	37	34	46	35	32
				Exposed	56	56	56	56	56	55	56	56	52	56	53	49	56	50	46	56	48	43	56	45	41	56	43	39	52	39	36	48	36	33	45	34	0	42	32	0	39	0	0	37	0	0
		7:12	30.3	Non-Exposed	57	57	57	57	57	57	57	57	57	57	57	57	57	57	57	56	56	56	56	56	56	55	55	55	54	54	51	52	52	46	51	49	43	49	46	40	46	42	37	43	40	35
				Exposed	57	57	57	57	57	57	57	57	56	57	57	53	57	57	50	56	54	48	56	52	45	54	49	43	49	45	39	45	41	36	41	38	34	38	36	31	35	34	0	33	32	0
		8:12	33.7	Non-Exposed	59	59	59	59	59	59	59	59	59	59	59	59	59	59	59	58	58	58	57	57	57	57	57	55	55	55	50	54	53	46	52	49	43	49	45	40	46	42	37	43	40	35
				Exposed	59	59	59	59	59	59	59	59	56	59	59	53	59	57	50	58	54	48	56	52	45	54	49	43	49	45	39	45	41	36	41	38	34	38	36	31	35	33	0	33	32	0
		9:12	36.9	Non-Exposed	60	60	60	60	60	60	60	60	60	60	60	60	60	60	60	60	60	60	59	59	58	58	58	55	56	56	50	55	53	46	53	49	43	49	45	40	46	42	37	43	40	35
				Exposed	60	60	60	60	60	59	60	60	56	60	60	53	60	57	50	59	54	47	56	52	45	53	49	43	49	45	39	45	41	36	41	38	34	38	35	31	35	33	0	33	32	0
		10:12	39.8	Non-Exposed	62	62	62	62	62	62	62	62	62	62	62	62	62	62	62	61	61	61	60	60	58	60	60	55	58	57	50	56	53	46	53	49	43	49	45	40	46	42	37	43	40	35
				Exposed	62	62	62	62	62	59	62	62	56	62	60	53	62	57	50	59	54	47	56	51	45	53	49	43	49	45	39	44	41	36	41	38	34	38	35	31	35	33	0	33	32	0
		11:12	42.5	Non-Exposed	64	64	64	64	64	64	64	64	64	64	64	64	64	64	64	63	63	60	62	62	58	61	61	55	59	57	50	57	53	46	53	49	43	49	45	40	46	42	37	43	40	35
				Exposed	64	64	63	64	64	59	64	63	56	64	60	53	62	57	50	59	54	47	56	51	45	53	49	43	48	45	39	44	41	36	41	38	34	38	35	31	35	33	0	33	32	0
		12:12	45	Non-Exposed	66	66	66	66	66	66	66	66	66	66	66	66	66	66	63	65	65	60	64	64	57	63	62	55	61	57	50	57	52	46	53	49	43	49	45	40	45	42	37	42	39	35
				Exposed	66	66	63	66	66	59	66	63	55	66	60	52	62	57	50	59	54	47	56	51	45	53	49	43	48	45	39	44	41	36	41	38	34	38	35	31	35	33	0	33	32	0

Tamarack 2.3 Rail – Gable Flush-Mount on 30 Foot Maximum Mean Roof Height – Portrait – Panel Length = 80 Inches or Less

Ground Snow Load	Exposure Category	Roof Pitch	Roof Angle	Wind Speed (mph)	95			100			105			110			115			120			125			130			140			150			160			170			180			190		
				Roof Area	1	2	3	1	2	3	1	2	3	1	2	3	1	2	3	1	2	3	1	2	3	1	2	3	1	2	3	1	2	3	1	2	3	1	2	3	1	2	3	1	2	3
30	B	Flat	0	Non-Exposed	58	58	58	58	58	58	58	58	58	58	58	58	58	58	58	58	58	58	58	58	58	58	58	58	58	58	58	58	58	55	58	58	51	58	57	47	58	53	44	58	50	41
				Exposed	58	58	58	58	58	58	58	58	58	58	58	58	58	58	58	58	58	57	58	58	54	58	58	51	58	57	47	58	52	43	58	48	40	54	45	37	50	42	34	47	39	33
		1:12	4.8	Non-Exposed	55	55	55	55	55	55	55	55	55	55	55	55	55	55	55	55	55	55	55	55	55	55	55	55	55	55	55	55	55	55	55	55	51	55	55	47	55	53	44	55	50	41
				Exposed	55	55	55	55	55	55	55	55	55	55	55	55	55	55	55	55	55	55	55	55	54	55	55	51	55	55	47	55	52	43	55	48	40	54	45	37	50	42	34	47	39	33
		2:12	9.5	Non-Exposed	52	52	52	52	52	52	52	52	52	52	52	52	52	52	52	52	52	52	52	52	52	52	52	52	52	52	52	52	52	52	52	52	48	52	50	44	52	46	41	52	43	38
				Exposed	52	52	52	52	52	52	52	52	52	52	52	52	52	52	52	52	52	52	52	52	51	52	52	48	52	49	44	52	45	40	51	41	37	48	38	34	45	36	32	42	34	0
		3:12	14.0	Non-Exposed	50	50	50	50	50	50	50	50	50	50	50	50	50	50	50	50	50	50	50	50	50	50	50	50	50	50	50	50	50	50	50	50	48	50	49	44	50	46	41	50	43	38
				Exposed	50	50	50	50	50	50	50	50	50	50	50	50	50	50	50	50	50	50	50	50	50	50	50	48	50	49	44	50	45	40	50	41	37	47	38	34	44	35	32	42	34	0
		4:12	18.4	Non-Exposed	50	50	50	50	50	50	50	50	50	50	50	50	50	50	50	50	50	50	50	50	50	50	50	50	50	50	50	50	50	50	50	50	47	50	49	44	50	46	41	50	43	38
				Exposed	50	50	50	50	50	50	50	50	50	50	50	50	50	50	50	50	50	50	50	50	48	50	49	43	50	45	40	50	41	37	47	38	34	44	35	32	42	33	0
		5:12	22.6	Non-Exposed	51	51	51	51	51	51	51	51	51	51	51	51	51	51	51	51	51	51	51	51	51	51	51	51	51	51	51	51	51	51	51	51	51	51	51	50	51	51	47	51	48	43
				Exposed	51	51	51	51	51	51	51	51	51	51	51	51	51	51	51	51	51	51	51	51	51	51	51	51	51	51	50	51	50	45	51	46	42	51	43	39	51	40	36	49	37	34
		6:12	26.6	Non-Exposed	52	52	52	52	52	52	52	52	52	52	52	52	52	52	52	52	52	52	52	52	52	52	52	52	52	52	52	52	52	52	52	52	52	52	52	50	52	51	46	52	48	43
				Exposed	52	52	52	52	52	52	52	52	52	52	52	52	52	52	52	52	52	52	52	52	52	52	52	52	52	52	49	52	50	45	52	46	42	52	42	38	52	40	36	49	37	34
		7:12	30.3	Non-Exposed	54	54	54	54	54	54	54	54	54	54	54	54	54	54	54	54	54	54	54	54	54	54	54	54	54	54	54	54	54	54	53	53	53	52	52	52	51	51	51	50	50	47
				Exposed	54	54	54	54	54	54	54	54	54	54	54	54	54	54	54	54	54	54	54	54	54	54	54	54	54	54	54	54	54	49	53	52	46	52	48	42	49	45	40	46	42	37
		8:12	33.7	Non-Exposed	56	56	56	56	56	56	56	56	56	56	56	56	56	56	56	56	56	56	56	56	56	56	56	56	56	56	56	55	55	55	54	54	54	53	53	53	52	52	51	51	51	47
				Exposed	56	56	56	56	56	56	56	56	56	56	56	56	56	56	56	56	56	56	56	56	56	56	56	56	56	56	54	55	55	49	54	52	46	53	48	42	49	45	39	46	42	37
		9:12	36.9	Non-Exposed	57	57	57	57	57	57	57	57	57	57	57	57	57	57	57	57	57	57	57	57	57	57	57	57	57	57	57	57	57	57	56	56	56	55	55	54	54	54	50	53	53	47
				Exposed	57	57	57	57	57	57	57	57	57	57	57	57	57	57	57	57	57	57	57	57	57	57	57	57	57	57	54	57	56	49	56	52	45	52	48	42	49	45	39	45	42	37
		10:12	39.8	Non-Exposed	59	59	59	59	59	59	59	59	59	59	59	59	59	59	59	59	59	59	59	59	59	59	59	59	59	59	59	59	59	59	58	58	58	56	56	54	55	55	50	54	54	47
				Exposed	59	59	59	59	59	59	59	59	59	59	59	59	59	59	59	59	59	59	59	59	59	59	59	58	59	59	53	59	56	49	56	52	45	52	48	42	49	45	39	45	42	37
		11:12	42.5	Non-Exposed	61	61	61	61	61	61	61	61	61	61	61	61	61	61	61	61	61	61	61	61	61	61	61	61	61	61	61	61	61	61	59	59	58	58	58	54	57	57	50	56	54	47
				Exposed	61	61	61	61	61	61	61	61	61	61	61	61	61	61	61	61	61	61	61	61	61	61	61	58	61	61	53	61	56	49	56	52	45	52	48	42	49	45	39	45	42	37
		12:12	45	Non-Exposed	63	63	63	63	63	63	63	63	63	63	63	63	63	63	63	63	63	63	63	63	63	63	63	63	63	63	63	63	63	62	61	61	58	60	60	54	59	57	50	57	54	47
				Exposed	63	63	63	63	63	63	63	63	63	63	63	63	63	63	63	63	63	63	63	63	61	63	63	58	63	61	53	61	56	49	56	52	45	52	48	42	48	45	39	45	42	37
	C	Flat	0	Non-Exposed	58	58	58	58	58	58	58	58	58	58	58	58	58	58	58	58	58	58	58	58	56	58	58	54	58	58	49	58	54	45	58	50	41	56	47	38	52	44	36	49	41	34
				Exposed	58	58	58	58	58	58	58	58	54	58	58	51	58	58	48	58	56	46	58	53	44	58	51	42	56	46	38	51	42	35	47	39	33	44	37	0	41	34	0	38	32	0
		1:12	4.8	Non-Exposed	55	55	55	55	55	55	55	55	55	55	55	55	55	55	55	55	55	55	55	55	55	55	55	53	55	55	49	55	54	45	55	50	41	55	47	38	52	43	36	49	41	34
				Exposed	55	55	55	55	55	55	55	55	54	55	55	51	55	55	48	55	55	46	55	53	44	55	50	41	55	46	38	51	42	35	47	39	33	44	36	0	41	34	0	38	32	0
		2:12	9.5	Non-Exposed	52	52	52	52	52	52	52	52	52	52	52	52	52	52	52	52	52	52	52	52	52	52	52	50	52	51	46	52	47	42	52	43	38	49	40	36	46	37	33	44	35	32
				Exposed	52	52	52	52	52	52	52	52	51	52	52	48	52	51	45	52	48	43	52	46	41	52	43	39	49	39	35	45	36	33	42	34	0	39	32	0	37	0	0	35	0	0
		3:12	14.0	Non-Exposed	50	50	50	50	50	50	50	50	50	50	50	50	50	50	50	50	50	50	50	50	50	50	50	50	50	50	45	50	47	42	50	43	38	49	40	35	46	37	33	43	35	32
				Exposed	50	50	50	50	50	50	50	50	50	50	50	48	50	50	45	50	48	43	50	46	41	50	43	39	49	39	35	45	36	33	42	34	0	39	32	0	37	0	0	35	0	0
		4:12	18.4	Non-Exposed	50	50	50	50	50	50	50	50	50	50	50	50	50	50	50	50	50	50	50	50	50	50	50	50	50	50	45	50	47	42	50	43	38	49	40	35	46	37	33	43	35	32
				Exposed	50	50	50	50	50	50	50	50	50	50	50	48	50	50	45	50	48	43	50	45	40	50	43	39	49	39	35	45	36	33	42	34	0	39	32	0	37	0	0	35	0	0
		5:12	22.6	Non-Exposed	51	51	51	51	51	51	51	51	51	51	51	51	51	51	51	51	51	51	51	51	51	51	51	51	51	51	51	51	51	47	51	48	44	51	44	40	50	41	37	49	39	35
				Exposed	51	51	51	51	51	51	51	51	51	51	51	51	51	51	51	51	51	49	51	51	46	51	48	44	51	44	40	51	40	36	49	37	34	46	35	31	43	33	0	41	0	0
		6:12	26.6	Non-Exposed	52	52	52	52	52	52	52	52	52	52	52	52	52	52	52	52	52	52	52	52	52	52	52	52	52	52	52	52	52	47	52	48	43	52	44	40	51	41	37	50	39	35
				Exposed	52	52	52	52	52	52	52	52	52	52	52	52	52	52	51	52	52	48	52	51	46	52	48	44	52	44	40	52	40	36	49	37	34	46	35	31	43	33	0	40	0	0
		7:12	30.3	Non-Exposed	54	54	54	54	54	54	54	54	54	54	54	54	54	54	54	54	54	54	54	54	54	53	53	53	52	52	52	51	51	51	50	50	48	49	49	44	48	47	41	47	44	39
				Exposed	54	54	54	54	54	54	54	54	54	54	54	54	54	54	54	54	54	53	54	54	50	53	53	48	52	50	44	50	46	40	46	42	37	42	39	35	39	37	32	37	35	0
		8:12	33.7	Non-Exposed	56	56	56	56	56	56	56	56	56	56	56	56	56	56	56	56	56	56	55	55	55	55	55	55	54	54	54	53	53	51	51	51	47	50	50	44	49	47	41	48	44	38
				Exposed	56	56	56	56	56	56	56	56	56	56	56	56	56	56	56	56	56	53	55	55	50	55	55	48	54	50	44	50	46	40	46	42	37	42	39	35	39	37	32	37	35	0
		9:12	36.9	Non-Exposed	57	57	57	57	57	57	57	57	57	57	57	57	57	57	57	57	57	57	57	57	57	57	57	57	55	55	55	54	54	51	53	53	47	51	50	44	50	47	41	47	44	38
				Exposed	57	57	57	57	57	57	57	57	57	57	57	57	57	57	55	57	57	53	57	57	50	57	54	48	54	50	44	50	46	40	46	42	37	42	39	34	39	37	32	37	34	0
		10:12	39.8	Non-Exposed	59	59	59	59	59	59	59	59	59	59	59	59	59	59	59	59	59	59	59	59	59	58	58	58	57	57	56	56	56	51	54	54	47	53	50	44	51	47	41	47	44	38
				Exposed	59	59	59	59	59	59	59	59	59	59	59	58	59	59	55	59	59	52	59	57	50	58	54	48	54	50	43	49	46	40	46	42	37	42	39	34	39	37	32	37	34	0
		11:12	42.5	Non-Exposed	61	61	61	61	61	61	61	61	61	61	61	61	61	61	61	61	61	61	61	61	61	60	60	60	59	59	56	57	57	51	56	54	47	54	50	44	51	47	41	47	44	38
				Exposed	61	61	61	61	61	61	61	61	61	61	61	58	61	61	55	61	60	52	61	57	50	59	54	47	54	50	43	49	46	40	45	42	37	42	39	34	39	37	32	37	34	0
		12:12	45	Non-Exposed	63	63	63	63	63	63	63	63	63	63	63	63	63	63	63	63	63	63	63	63	63	62	62	61	61	61	55	59	58	51	57	54	47	54	50	44	51	47	41	47	44	38
				Exposed	63	63	63	63	63	63	63	63	61	63	63	58	63	63	55	63	59	52	62	57	50	59	54	47	54	49	43	49	46	40	45	42	37	42	39	34	39	37	32	37	34	0
	D	Flat	0	Non-Exposed	58	58	58	58	58	58	58	58	58	58	58	58	58	58	56	58	58	53	58	58	51	58	58	48	58	53	44	58	49	40	55	45	37	51	42	35	47	39	33	44	37	0
				Exposed	58	58	55	58	58	52	58	58	49	58	56	46	58	53	44	58	50	41	58	48	39	55	46	37	50	42	34	46	38	32	43	36	0	40	33	0	37	31	0	35	0	0
		1:12	4.8	Non-Exposed	55	55	55	55	55	55	55	55	55	55	55	55	55	55	55	55	55	53	55	55	50	55	55	48	55	53	44	55	49	40	54	45	37	51	42	35	47	39	33	44	37	0
				Exposed	55	55	55	55	55	52	55	55	49	55	55	46	55	53	43	55	50	41	55	48	39	55	45	37	50	42	34	46	38	32	43	35	0	40	33	0	37	31	0	35	0	0
		2:12	9.5	Non-Exposed	52	52	52	52	52	52	52	52	52	52	52	52	52	52	52	52	52	50	52	52	47	52	51	45	52	46	41	52	42	37	48	39	35	45	36	33	42	34	0	40	32	0
				Exposed	52	52	52	52	52	49	52	51	46	52	48	43	52	46	41	52	43	38	51	41	36	48	39	35	45	35	32	41	33	0	38	0	0	36	0	0	34	0	0	32	0	0
		3:12	14.0	Non-Exposed	50	50	50	50	50	50	50	50	50	50	50	50	50	50	50	50	50	50	50	50	47	50	50	45	50	46	41	50	42	37	48	39	35	45	36	33	42	34	0	40	32	0
				Exposed	50	50	50	50	50	49	50	50	46	50	48	43	50	45	41	50	43	38	50	41	36	48	39	35	44	35	32	41	33	0	38	0	0	36	0	0	34	0	0	32	0	0
		4:12	18.4	Non-Exposed	50	50	50	50	50	50	50	50	50	50	50	50	50	50	50	50	50	50	50	50	47	50	50	45	50	46	41	50	42	37	48	39	35	45	36	32	42	34	0	39	32	0
				Exposed	50	50	50	50	50	48	50	50	45	50	48	43	50	45	40	50	43	38	50	41	36	48	39	35	44	35	32	41	33	0	38	0	0	36	0	0	34	0	0	32	0	0
		5:12	22.6	Non-Exposed	51	51	51	51	51	51	51	51	51	51	51	51	51	51	51	51	51	51	51	51	51	51	51	51	51	51	46	51	47	42	51	43	39	50	40	36	49	37	34	46	35	32
				Exposed	51	51	51	51	51	51	51	51	51	51	51	49	51	51	46	51	48	44	51	46	41	51	43	39	51	40	36	48	36	33	45	34	31	42	32	0	39	0	0	37	0	0
		6:12	26.6	Non-Exposed	52	52	52	52	52	52	52	52	52	52	52	52	52	52	52	52	52	52	52	52	52	52	52	51	52	51	46	52	47	42	52	43	39	51	40	36	49	37	34	46	35	32
				Exposed	52	52	52	52	52	52	52	52	52	52	52	49	52	50	46	52	48	43	52	45	41	52	43	39	52	39	36	48	36	33	45	34	0	42	32	0	39	0	0	37	0	0
		7:12	30.3	Non-Exposed	54	54	54	54	54	54	54	54	54	54	54	54	54	54	54	53	53	53	53	53	53	52	52	52	51	51	51	50	50	46	48	48	43	47	46	40	46	42	37	43	40	35
				Exposed	54	54	54	54	54	54	54	54	54	54	54	53	54	54	50	53	53	48	53	52	45	52	49	43	49	45	39	45	41	36	41	38	34	38	36	31	35	34	0	33	32	0
		8:12	33.7	Non-Exposed	56	56	56	56	56	56	56	56	56	56	56	56	55	55	55	55	55	55	54	54	54	54	54	54	52	52	50	51	51	46	50	49	43	48	45	40	46	42	37	43	40	35
				Exposed	56	56	56	56	56	56	56	56	56	56	56	53	55	55	50	55	54	48	54	52	45	54	49	43	49	45	39	45	41	36	41	38	34	38	36	31	35	33	0	33	32	0
		9:12	36.9	Non-Exposed	57	57	57	57	57	57	57	57	57	57	57	57	57	57	57	56	56	56	56	56	56	55	55	55	54	54	50	52	52	46	51	49	43	49	45	40	46	42	37	43	40	35
				Exposed	57	57	57	57	57	57	57	57	56	57	57	53	57	57	50	56	54	47	56	52	45	53	49	43	49	45	39	45	41	36	41	38	34	38	35	31	35	33	0	33	32	0
		10:12	39.8	Non-Exposed	59	59	59	59	59	59	59	59	59	59	59	59	59	59	59	58	58	58	58	58	58	57	57	55	55	55	50	54	53	46	52	49	43	49	45	40	46	42	37	43	40	35
				Exposed	59	59	59	59	59	59	59	59	56	59	59	53	59	59	57	50	58	54	47	56	51	45	53	49	43	49	45	39	44	41	36	41	38	34	38	35	31	35	33	0	33	32	0
		11:12	42.5	Non-Exposed	61	61	61	61	61	61	61	61	61	61	61	61	61	61	61	60	60	60	59	59	58	59	59	55	57	57	50	55	53	46	53	49	43	49	45	40	46	42	37	43	40	35
				Exposed	61	61	61	61	61	59	61	61	56	61	60	53	61	57	50	59	54	47	56	51	45	53	49	43	48	45	39	44	41	36	41	38	34	38	35	31	35	33	0	33	32	0
		12:12	45	Non-Exposed	63	63	63	63	63	63	63	63	63	63	63	63	63	63	63	62	62	60	61	61	57	60	60	55	59	57	50	57	52	46	53	49	43	49	45	40	45	42	37	42	39	35
				Exposed	63	63	63	63	63	59	63	63	55	63	60	52	62	57	50	59	54	47	56	51	45	53	49	43	48	45	39	44	41	36	41	38	34	38	35	31	35	33	0	33	32	0

Tamarack 2.3 Rail – Gable Flush-Mount on 30 Foot Maximum Mean Roof Height – Portrait – Panel Length = 80 Inches or Less

Ground Snow Load	Exposure Category	Roof Pitch	Roof Angle	Wind Speed (mph)	95			100			105			110			115			120			125			130			140			150			160			170			180			190		
				Roof Area	1	2	3	1	2	3	1	2	3	1	2	3	1	2	3	1	2	3	1	2	3	1	2	3	1	2	3	1	2	3	1	2	3	1	2	3	1	2	3	1	2	3
35	B	Flat	0	Non-Exposed	55	55	55	55	55	55	55	55	55	55	55	55	55	55	55	55	55	55	55	55	55	55	55	55	55	55	55	55	55	55	55	55	51	55	55	47	55	53	44	55	50	41
				Exposed	55	55	55	55	55	55	55	55	55	55	55	55	55	55	55	55	55	55	55	55	54	55	55	51	55	55	47	55	52	43	55	48	40	54	45	37	50	42	34	47	39	33
		1:12	4.8	Non-Exposed	51	51	51	51	51	51	51	51	51	51	51	51	51	51	51	51	51	51	51	51	51	51	51	51	51	51	51	51	51	51	51	51	51	51	51	47	51	51	44	51	50	41
				Exposed	51	51	51	51	51	51	51	51	51	51	51	51	51	51	51	51	51	51	51	51	51	51	51	51	51	51	47	51	51	43	51	48	40	51	45	37	50	42	34	47	39	33
		2:12	9.5	Non-Exposed	48	48	48	48	48	48	48	48	48	48	48	48	48	48	48	48	48	48	48	48	48	48	48	48	48	48	48	48	48	48	48	48	48	48	48	44	48	46	41	48	43	38
				Exposed	48	48	48	48	48	48	48	48	48	48	48	48	48	48	48	48	48	48	48	48	48	48	48	48	48	48	44	48	45	40	48	41	37	48	38	34	45	36	32	42	34	0
		3:12	14.0	Non-Exposed	46	46	46	46	46	46	46	46	46	46	46	46	46	46	46	46	46	46	46	46	46	46	46	46	46	46	46	46	46	46	46	46	46	46	46	44	46	46	41	46	43	38
				Exposed	46	46	46	46	46	46	46	46	46	46	46	46	46	46	46	46	46	46	46	46	44	46	46	40	46	41	37	46	38	34	44	35	32	42	34	0						
		4:12	18.4	Non-Exposed	46	46	46	46	46	46	46	46	46	46	46	46	46	46	46	46	46	46	46	46	46	46	46	46	46	46	46	46	46	46	46	46	46	46	46	44	46	46	41	46	43	38
				Exposed	46	46	46	46	46	46	46	46	46	46	46	46	46	46	46	46	46	46	46	46	43	46	46	40	46	41	37	46	38	34	44	35	32	42	34	0						
		5:12	22.6	Non-Exposed	47	47	47	47	47	47	47	47	47	47	47	47	47	47	47	47	47	47	47	47	47	47	47	47	47	47	47	47	47	47	47	47	47	47	47	47	47	47	47	47	47	43
				Exposed	47	47	47	47	47	47	47	47	47	47	47	47	47	47	47	47	47	47	47	47	47	47	47	47	47	47	47	47	47	45	47	46	42	47	43	39	47	40	36	47	37	34
		6:12	26.6	Non-Exposed	48	48	48	48	48	48	48	48	48	48	48	48	48	48	48	48	48	48	48	48	48	48	48	48	48	48	48	48	48	48	48	48	48	48	48	48	48	48	46	48	48	43
				Exposed	48	48	48	48	48	48	48	48	48	48	48	48	48	48	48	48	48	48	48	48	48	48	48	48	48	48	48	48	48	45	48	46	42	48	42	38	48	40	36	48	37	34
		7:12	30.3	Non-Exposed	50	50	50	50	50	50	50	50	50	50	50	50	50	50	50	50	50	50	50	50	50	50	50	50	50	50	50	50	50	50	50	50	50	49	49	49	49	49	49	48	48	47
				Exposed	50	50	50	50	50	50	50	50	50	50	50	50	50	50	50	50	50	50	50	50	50	50	50	50	50	50	50	50	50	49	50	50	46	49	48	42	49	45	40	46	42	37
		8:12	33.7	Non-Exposed	52	52	52	52	52	52	52	52	52	52	52	52	52	52	52	52	52	52	52	52	52	52	52	52	52	52	52	52	52	52	52	52	52	51	51	51	50	50	50	49	49	47
				Exposed	52	52	52	52	52	52	52	52	52	52	52	52	52	52	52	52	52	52	52	52	52	52	52	52	52	52	52	52	52	49	52	52	46	51	48	42	49	45	39	46	42	37
		9:12	36.9	Non-Exposed	54	54	54	54	54	54	54	54	54	54	54	54	54	54	54	54	54	54	54	54	54	54	54	54	54	54	54	54	54	54	53	53	53	52	52	52	51	51	50	50	50	47
				Exposed	54	54	54	54	54	54	54	54	54	54	54	54	54	54	54	54	54	54	54	54	54	54	54	54	54	54	54	54	54	49	53	52	45	52	48	42	49	45	39	45	42	37
		10:12	39.8	Non-Exposed	56	56	56	56	56	56	56	56	56	56	56	56	56	56	56	56	56	56	56	56	56	56	56	56	56	56	56	56	56	56	55	55	55	54	54	54	53	53	50	52	52	47
				Exposed	56	56	56	56	56	56	56	56	56	56	56	56	56	56	56	56	56	56	56	56	56	56	56	56	56	56	53	56	56	49	55	52	45	52	48	42	49	45	39	45	42	37
		11:12	42.5	Non-Exposed	58	58	58	58	58	58	58	58	58	58	58	58	58	58	58	58	58	58	58	58	58	58	58	58	58	58	58	58	58	58	57	57	57	56	56	54	55	55	50	54	54	47
				Exposed	58	58	58	58	58	58	58	58	58	58	58	58	58	58	58	58	58	58	58	58	58	58	58	58	58	58	53	58	56	49	56	52	45	52	48	42	49	45	39	45	42	37
		12:12	45	Non-Exposed	60	60	60	60	60	60	60	60	60	60	60	60	60	60	60	60	60	60	60	60	60	60	60	60	60	60	60	60	60	60	59	59	58	58	58	54	56	56	50	55	54	47
				Exposed	60	60	60	60	60	60	60	60	60	60	60	60	60	60	60	60	60	60	60	60	60	60	60	60	60	60	53	60	56	49	56	52	45	52	48	42	48	45	39	45	42	37
	C	Flat	0	Non-Exposed	55	55	55	55	55	55	55	55	55	55	55	55	55	55	55	55	55	55	55	55	55	55	55	54	55	55	49	55	54	45	55	50	41	55	47	38	52	44	36	49	41	34
				Exposed	55	55	55	55	55	55	55	55	54	55	55	51	55	55	48	55	55	46	55	53	44	55	51	42	55	46	38	51	42	35	47	39	33	44	37	0	41	34	0	38	32	0
		1:12	4.8	Non-Exposed	51	51	51	51	51	51	51	51	51	51	51	51	51	51	51	51	51	51	51	51	51	51	51	51	51	51	49	51	51	45	51	50	41	51	47	38	51	43	36	49	41	34
				Exposed	51	51	51	51	51	51	51	51	51	51	51	51	51	51	48	51	51	46	51	51	44	51	50	41	51	46	38	51	42	35	47	39	33	44	36	0	41	34	0	38	32	0
		2:12	9.5	Non-Exposed	48	48	48	48	48	48	48	48	48	48	48	48	48	48	48	48	48	48	48	48	48	48	48	48	48	48	46	48	47	42	48	43	38	48	40	36	46	37	33	44	35	32
				Exposed	48	48	48	48	48	48	48	48	48	48	48	48	48	48	45	48	48	43	48	46	41	48	43	39	48	39	35	45	36	33	42	34	0	39	32	0	37	0	0	35	0	0
		3:12	14.0	Non-Exposed	46	46	46	46	46	46	46	46	46	46	46	46	46	46	46	46	46	46	46	46	46	46	46	46	46	46	45	46	46	42	46	43	38	46	40	35	46	37	33	43	35	32
				Exposed	46	46	46	46	46	46	46	46	46	46	46	46	46	46	45	46	46	43	46	46	41	46	43	39	46	39	35	45	36	33	42	34	0	39	32	0	37	0	0	35	0	0
		4:12	18.4	Non-Exposed	46	46	46	46	46	46	46	46	46	46	46	46	46	46	46	46	46	46	46	46	46	46	46	46	46	46	45	46	46	42	46	43	38	46	40	35	46	37	33	43	35	32
				Exposed	46	46	46	46	46	46	46	46	46	46	46	46	46	46	45	46	46	43	46	45	40	46	43	39	46	39	35	45	36	33	42	34	0	39	32	0	37	0	0	35	0	0
		5:12	22.6	Non-Exposed	47	47	47	47	47	47	47	47	47	47	47	47	47	47	47	47	47	47	47	47	47	47	47	47	47	47	47	47	47	47	47	47	44	47	44	40	47	41	37	47	39	35
				Exposed	47	47	47	47	47	47	47	47	47	47	47	47	47	47	47	47	47	47	47	47	46	47	47	44	47	44	40	47	40	36	47	37	34	46	35	31	43	33	0	41	0	0
		6:12	26.6	Non-Exposed	48	48	48	48	48	48	48	48	48	48	48	48	48	48	48	48	48	48	48	48	48	48	48	48	48	48	48	48	48	47	48	48	43	48	44	40	48	41	37	48	39	35
				Exposed	48	48	48	48	48	48	48	48	48	48	48	48	48	48	48	48	48	46	48	48	44	48	44	40	48	40	36	48	37	34	46	35	31	43	33	0	40	0	0			
		7:12	30.3	Non-Exposed	50	50	50	50	50	50	50	50	50	50	50	50	50	50	50	50	50	50	50	50	50	50	50	50	50	50	50	49	49	49	48	48	48	47	47	44	46	46	41	45	44	39
				Exposed	50	50	50	50	50	50	50	50	50	50	50	50	50	50	50	50	50	50	50	50	50	50	50	48	50	50	44	49	46	40	46	42	37	42	39	35	39	37	32	37	35	0
		8:12	33.7	Non-Exposed	52	52	52	52	52	52	52	52	52	52	52	52	52	52	52	52	52	52	52	52	52	52	52	52	51	51	51	50	50	50	49	49	47	48	48	44	47	47	41	46	44	38
				Exposed	52	52	52	52	52	52	52	52	52	52	52	52	52	52	52	52	52	52	52	52	50	52	52	48	51	50	44	50	46	40	46	42	37	42	39	35	39	37	32	37	35	0
		9:12	36.9	Non-Exposed	54	54	54	54	54	54	54	54	54	54	54	54	54	54	54	54	54	54	54	54	54	54	54	54	53	53	53	52	52	51	50	50	47	49	49	44	48	47	41	47	44	38
				Exposed	54	54	54	54	54	54	54	54	54	54	54	54	54	54	54	54	54	53	54	54	50	54	54	48	53	50	44	50	46	40	46	42	37	42	39	34	39	37	32	37	34	0
		10:12	39.8	Non-Exposed	56	56	56	56	56	56	56	56	56	56	56	56	56	56	56	56	56	56	56	56	56	56	56	56	54	54	54	53	53	51	52	52	47	51	50	44	50	47	41	47	44	38
				Exposed	56	56	56	56	56	56	56	56	56	56	56	56	56	56	55	56	56	52	56	56	50	56	54	48	54	50	43	49	46	40	46	42	37	42	39	34	39	37	32	37	34	0
		11:12	42.5	Non-Exposed	58	58	58	58	58	58	58	58	58	58	58	58	58	58	58	58	58	58	58	58	58	58	58	56	56	56	55	55	51	54	54	47	52	50	44	51	47	41	47	44	38
				Exposed	58	58	58	58	58	58	58	58	58	58	58	58	58	58	55	58	58	52	58	57	50	58	54	47	54	50	43	49	46	40	45	42	37	42	39	34	39	37	32	37	34	0
		12:12	45	Non-Exposed	60	60	60	60	60	60	60	60	60	60	60	60	60	60	60	60	60	60	60	60	60	60	60	58	58	55	57	57	51	55	54	47	54	50	44	51	47	41	47	44	38
				Exposed	60	60	60	60	60	60	60	60	60	60	60	58	60	60	55	60	59	52	60	57	50	59	54	47	54	49	43	49	46	40	45	42	37	42	39	34	39	37	32	37	34	0
	D	Flat	0	Non-Exposed	55	55	55	55	55	55	55	55	55	55	55	55	55	55	55	55	55	53	55	55	51	55	55	48	55	53	44	55	49	40	55	45	37	51	42	35	47	39	33	44	37	0
				Exposed	55	55	55	55	55	52	55	55	49	55	55	46	55	53	44	55	50	41	55	48	39	55	46	37	50	42	34	46	38	32	43	36	0	40	33	0	37	31	0	35	0	0
		1:12	4.8	Non-Exposed	51	51	51	51	51	51	51	51	51	51	51	51	51	51	51	51	51	51	51	51	50	51	51	48	51	51	44	51	49	40	51	45	37	51	42	35	47	39	33	44	37	0
				Exposed	51	51	51	51	51	51	51	51	49	51	51	46	51	51	43	51	50	41	51	48	39	51	45	37	50	42	34	46	38	32	43	35	0	40	33	0	37	31	0	35	0	0
		2:12	9.5	Non-Exposed	48	48	48	48	48	48	48	48	48	48	48	48	48	48	48	48	48	48	48	48	47	48	48	45	48	46	41	48	42	37	48	39	35	45	36	33	42	34	0	40	32	0
				Exposed	48	48	48	48	48	48	48	48	46	48	48	43	48	46	41	48	43	38	48	41	36	48	39	35	45	35	32	41	33	0	38	0	0	36	0	0	34	0	0	32	0	0
		3:12	14.0	Non-Exposed	46	46	46	46	46	46	46	46	46	46	46	46	46	46	46	46	46	46	46	46	46	46	46	45	46	46	41	46	42	37	46	39	35	45	36	33	42	34	0	40	32	0
				Exposed	46	46	46	46	46	46	46	46	46	46	46	43	46	45	41	46	43	38	46	41	36	46	39	35	44	35	32	41	33	0	38	0	0	36	0	0	34	0	0	32	0	0
		4:12	18.4	Non-Exposed	46	46	46	46	46	46	46	46	46	46	46	46	46	46	46	46	46	46	46	46	46	46	46	45	46	46	41	46	42	37	46	39	35	45	36	32	42	34	0	39	32	0
				Exposed	46	46	46	46	46	46	46	45	46	46	43	46	45	40	46	43	38	46	41	36	46	39	35	44	35	32	41	33	0	38	0	0	36	0	0	34	0	0	32	0	0
		5:12	22.6	Non-Exposed	47	47	47	47	47	47	47	47	47	47	47	47	47	47	47	47	47	47	47	47	47	47	47	47	47	47	46	47	47	42	47	43	39	47	40	36	47	37	34	46	35	32
				Exposed	47	47	47	47	47	47	47	47	47	47	47	47	47	46	47	47	44	47	46	41	47	43	39	47	40	36	47	36	33	45	34	31	42	32	0	39	0	0	37	0	0
		6:12	26.6	Non-Exposed	48	48	48	48	48	48	48	48	48	48	48	48	48	48	48	48	48	48	48	48	48	48	48	48	48	48	46	48	47	42	48	43	39	48	40	36	47	37	34	46	35	32
				Exposed	48	48	48	48	48	48	48	48	48	48	48	48	48	48	46	48	48	43	48	45	41	48	43	39	48	39	36	48	36	33	45	34	0	42	32	0	39	0	0	37	0	0
		7:12	30.3	Non-Exposed	50	50	50	50	50	50	50	50	50	50	50	50	50	50	50	50	50	50	50	50	50	50	50	48	48	48	47	47	46	46	46	43	45	45	40	44	42	37	43	40	35
				Exposed	50	50	50	50	50	50	50	50	50	50	50	50	50	50	50	50	50	48	50	50	45	50	49	43	48	45	39	45	41	36	41	38	34	38	36	31	35	34	0	33	32	0
		8:12	33.7	Non-Exposed	52	52	52	52	52	52	52	52	52	52	52	52	52	52	52	52	52	52	52	52	52	52	51	51	51	50	50	50	49	49	46	48	48	43	46	45	40	45	42	37	43	40	35
				Exposed	52	52	52	52	52	52	52	52	52	52	52	52	52	52	50	52	52	48	52	52	45	51	49	43	49	45	39	45	41	36	41	38	34	38	36	31	35	33	0	33	32	0
		9:12	36.9	Non-Exposed	54	54	54	54	54	54	54	54	54	54	54	54	54	54	54	54	54	54	54	54	53	53	53	53	53	51	51	50	50	50	46	49	49	43	48	45	40	46	42	37	43	40	35
				Exposed	54	54	54	54	54	54	54	54	54	54	54	53	54	54	50	54	54	47	53	52	45	53	49	43	49	45	39	45	41	36	41	38	34	38	35	31	35	33	0	33	32	0
		10:12	39.8	Non-Exposed	56	56	56	56	56	56	56	56	56	56	56	56	56	56	56	56	56	56	55	55	55	54	54	54	53	53	50	52	52	46	50	49	43	49	45	40	46	42	37	43	40	35
				Exposed	56	56	56	56	56	56	56	56	56	56	56	53	56	56	50	56	54	47	55	51	45	53	49	43	49	45	39	44	41	36	41	38	34	38	35	31	35	33	0	33	32	0
		11:12	42.5	Non-Exposed	58	58	58	58	58	58	58	58	58	58	58	58	58	58	58	58	58	58	57	57	57	56	56	55	55	55	50	53	53	46	52	49	43	49	45	40	46	42	37	43	40	35
				Exposed	58	58	58	58	58	58	58	58	56	58	58	53	58	57	50	58	54	47	56	51	45	53	49	43	48	45	39	44	41	36	41	38	34	38	35	31	35	33	0	33	32	0
		12:12	45	Non-Exposed	60	60	60	60	60	60	60	60	60	60	60	60	60	60	60	60	60	60	59	59	57	58	58	55	56	56	50	55	52	46	53	49	43	49	45	40	45	42	37	42	39	35
				Exposed	60	60	60	60	60	59	60	60	55	60	60	52	60	57	50	59	54	47	56	51	45	53	49	43	48	45	39	44	41	36	41	38	34	38	35	31	35	33	0	33	32	0

Tamarack 2.3 Rail – Gable Flush-Mount on 30 Foot Maximum Mean Roof Height – Portrait – Panel Length = 80 Inches or Less

Ground Snow Load	Exposure Category	Roof Pitch	Roof Angle	Wind Speed (mph)	95			100			105			110			115			120			125			130			140			150			160			170			180			190		
				Roof Area	1	2	3	1	2	3	1	2	3	1	2	3	1	2	3	1	2	3	1	2	3	1	2	3	1	2	3	1	2	3	1	2	3	1	2	3	1	2	3	1	2	3
		Flat	0	Non-Exposed	51	51	51	51	51	51	51	51	51	51	51	51	51	51	51	51	51	51	51	51	51	51	51	51	51	51	51	51	51	51	51	51	51	51	51	47	51	51	44	51	50	41
				Exposed	51	51	51	51	51	51	51	51	51	51	51	51	51	51	51	51	51	51	51	51	51	51	51	51	51	51	47	51	51	43	51	48	40	51	45	37	50	42	34	47	39	33
		1:12	4.8	Non-Exposed	48	48	48	48	48	48	48	48	48	48	48	48	48	48	48	48	48	48	48	48	48	48	48	48	48	48	48	48	48	48	48	48	48	48	48	47	48	48	44	48	48	41
				Exposed	48	48	48	48	48	48	48	48	48	48	48	48	48	48	48	48	48	48	48	48	48	48	48	48	48	48	47	48	48	43	48	48	40	48	45	37	48	42	34	47	39	33
		2:12	9.5	Non-Exposed	45	45	45	45	45	45	45	45	45	45	45	45	45	45	45	45	45	45	45	45	45	45	45	45	45	45	45	45	45	45	45	45	45	45	45	44	45	45	41	45	43	38
				Exposed	45	45	45	45	45	45	45	45	45	45	45	45	45	45	45	45	45	45	45	45	45	45	45	45	45	45	44	45	45	40	45	41	37	45	38	34	45	36	32	42	34	0
		3:12	14.0	Non-Exposed	43	43	43	43	43	43	43	43	43	43	43	43	43	43	43	43	43	43	43	43	43	43	43	43	43	43	43	43	43	43	43	43	43	43	43	43	43	43	41	43	43	38
				Exposed	43	43	43	43	43	43	43	43	43	43	43	43	43	43	43	43	43	43	43	43	43	43	43	43	43	43	43	43	43	40	43	41	37	43	38	34	43	35	32	42	34	0
		4:12	18.4	Non-Exposed	43	43	43	43	43	43	43	43	43	43	43	43	43	43	43	43	43	43	43	43	43	43	43	43	43	43	43	43	43	43	43	43	43	43	43	43	43	43	41	43	43	38
				Exposed	43	43	43	43	43	43	43	43	43	43	43	43	43	43	43	43	43	43	43	43	43	43	43	43	43	43	43	43	43	40	43	41	37	43	38	34	43	35	32	42	33	0
		5:12	22.6	Non-Exposed	44	44	44	44	44	44	44	44	44	44	44	44	44	44	44	44	44	44	44	44	44	44	44	44	44	44	44	44	44	44	44	44	44	44	44	44	44	44	44	44	44	43
				Exposed	44	44	44	44	44	44	44	44	44	44	44	44	44	44	44	44	44	44	44	44	44	44	44	44	44	44	44	44	44	44	44	44	42	44	43	39	44	40	36	44	37	34
	B	6:12	26.6	Non-Exposed	46	46	46	46	46	46	46	46	46	46	46	46	46	46	46	46	46	46	46	46	46	46	46	46	46	46	46	46	46	46	46	46	46	46	46	46	46	46	46	46	46	43
				Exposed	46	46	46	46	46	46	46	46	46	46	46	46	46	46	46	46	46	46	46	46	46	46	46	46	46	46	46	46	46	45	46	46	42	46	42	38	46	40	36	46	37	34
		7:12	30.3	Non-Exposed	47	47	47	47	47	47	47	47	47	47	47	47	47	47	47	47	47	47	47	47	47	47	47	47	47	47	47	47	47	47	47	47	47	47	47	47	46	46	46	46	46	46
				Exposed	47	47	47	47	47	47	47	47	47	47	47	47	47	47	47	47	47	47	47	47	47	47	47	47	47	47	47	47	47	47	47	47	46	47	47	42	46	45	40	46	42	37
		8:12	33.7	Non-Exposed	49	49	49	49	49	49	49	49	49	49	49	49	49	49	49	49	49	49	49	49	49	49	49	49	49	49	49	49	49	49	49	49	49	49	49	49	48	48	48	47	47	47
				Exposed	49	49	49	49	49	49	49	49	49	49	49	49	49	49	49	49	49	49	49	49	49	49	49	49	49	49	49	49	49	49	49	49	46	49	48	42	48	45	39	46	42	37
		9:12	36.9	Non-Exposed	51	51	51	51	51	51	51	51	51	51	51	51	51	51	51	51	51	51	51	51	51	51	51	51	51	51	51	51	51	51	51	51	51	50	50	50	49	49	49	48	48	47
				Exposed	51	51	51	51	51	51	51	51	51	51	51	51	51	51	51	51	51	51	51	51	51	51	51	51	51	51	51	51	51	49	51	51	45	50	48	42	49	45	39	45	42	37
		10:12	39.8	Non-Exposed	54	54	54	54	54	54	54	54	54	54	54	54	54	54	54	54	54	54	54	54	54	54	54	54	54	54	54	54	54	54	53	53	53	52	52	52	51	51	50	50	50	47
				Exposed	54	54	54	54	54	54	54	54	54	54	54	54	54	54	54	54	54	54	54	54	54	54	54	54	54	54	53	54	54	49	53	52	45	52	48	42	49	45	39	45	42	37
		11:12	42.5	Non-Exposed	56	56	56	56	56	56	56	56	56	56	56	56	56	56	56	56	56	56	56	56	56	56	56	56	56	56	56	56	56	56	55	55	55	54	54	54	53	53	50	52	52	47
				Exposed	56	56	56	56	56	56	56	56	56	56	56	56	56	56	56	56	56	56	56	56	56	56	56	56	56	56	53	56	56	49	55	52	45	52	48	42	49	45	39	45	42	37
		12:12	45	Non-Exposed	58	58	58	58	58	58	58	58	58	58	58	58	58	58	58	58	58	58	58	58	58	58	58	58	58	58	58	58	58	58	57	57	57	56	56	54	54	54	50	53	53	47
				Exposed	58	58	58	58	58	58	58	58	58	58	58	58	58	58	58	58	58	58	58	58	58	58	58	58	58	58	53	58	56	49	56	52	45	52	48	42	48	45	39	45	42	37
		Flat	0	Non-Exposed	51	51	51	51	51	51	51	51	51	51	51	51	51	51	51	51	51	51	51	51	51	51	51	51	51	51	49	51	51	45	51	50	41	51	47	38	51	44	36	49	41	34
				Exposed	51	51	51	51	51	51	51	51	51	51	51	51	51	51	48	51	51	46	51	51	44	51	51	42	51	46	38	51	42	35	47	39	33	44	37	0	41	34	0	38	32	0
		1:12	4.8	Non-Exposed	48	48	48	48	48	48	48	48	48	48	48	48	48	48	48	48	48	48	48	48	48	48	48	48	48	48	48	48	48	45	48	48	41	48	47	38	48	43	36	48	41	34
				Exposed	48	48	48	48	48	48	48	48	48	48	48	48	48	48	48	48	48	46	48	48	44	48	48	41	48	46	38	48	42	35	47	39	33	44	36	0	41	34	0	38	32	0
		2:12	9.5	Non-Exposed	45	45	45	45	45	45	45	45	45	45	45	45	45	45	45	45	45	45	45	45	45	45	45	45	45	45	45	45	45	42	45	43	38	45	40	36	45	37	33	44	35	32
				Exposed	45	45	45	45	45	45	45	45	45	45	45	45	45	45	45	45	45	43	45	45	41	45	43	39	45	39	35	45	36	33	42	34	0	39	32	0	37	0	0	35	0	0
		3:12	14.0	Non-Exposed	43	43	43	43	43	43	43	43	43	43	43	43	43	43	43	43	43	43	43	43	43	43	43	43	43	43	43	43	43	42	43	43	38	43	40	35	43	37	33	43	35	32
				Exposed	43	43	43	43	43	43	43	43	43	43	43	43	43	43	43	43	43	41	43	43	39	43	39	35	43	36	33	42	34	0	39	32	0	37	0	0	35	0	0
		4:12	18.4	Non-Exposed	43	43	43	43	43	43	43	43	43	43	43	43	43	43	43	43	43	43	43	43	43	43	43	43	43	43	43	43	43	42	43	43	38	43	40	35	43	37	33	43	35	32
				Exposed	43	43	43	43	43	43	43	43	43	43	43	43	43	43	43	43	43	40	43	43	39	43	39	35	43	36	33	42	34	0	39	32	0	37	0	0	35	0	0
		5:12	22.6	Non-Exposed	44	44	44	44	44	44	44	44	44	44	44	44	44	44	44	44	44	44	44	44	44	44	44	44	44	44	44	44	44	44	44	44	44	44	44	40	44	41	37	44	39	35
				Exposed	44	44	44	44	44	44	44	44	44	44	44	44	44	44	44	44	44	44	44	44	44	44	44	40	44	40	36	44	37	34	44	35	31	43	33	0	41	0	0			
40	C	6:12	26.6	Non-Exposed	46	46	46	46	46	46	46	46	46	46	46	46	46	46	46	46	46	46	46	46	46	46	46	46	46	46	46	46	46	43	46	44	40	46	41	37	46	39	35			
				Exposed	46	46	46	46	46	46	46	46	46	46	46	46	46	46	46	46	46	46	46	46	44	46	44	40	46	40	36	46	37	34	46	35	31	43	33	0	40	0	0			
		7:12	30.3	Non-Exposed	47	47	47	47	47	47	47	47	47	47	47	47	47	47	47	47	47	47	47	47	47	47	47	47	47	47	47	47	47	46	46	46	45	45	44	44	44	41	43	43	39	
				Exposed	47	47	47	47	47	47	47	47	47	47	47	47	47	47	47	47	47	47	47	47	47	47	47	44	47	46	40	46	42	37	42	39	35	39	37	32	37	35	0			
		8:12	33.7	Non-Exposed	49	49	49	49	49	49	49	49	49	49	49	49	49	49	49	49	49	49	49	49	49	49	49	49	48	48	48	47	47	47	46	46	44	45	45	41	44	44	38			
				Exposed	49	49	49	49	49	49	49	49	49	49	49	49	49	49	49	49	49	49	49	49	49	49	49	48	49	49	44	48	46	40	46	42	37	42	39	35	39	37	32	37	35	0
		9:12	36.9	Non-Exposed	51	51	51	51	51	51	51	51	51	51	51	51	51	51	51	51	51	51	51	51	51	51	51	51	50	50	50	48	48	47	47	47	44	46	46	41	45	44	38			
				Exposed	51	51	51	51	51	51	51	51	51	51	51	51	51	51	51	51	51	51	51	51	50	51	51	48	51	50	44	50	46	40	46	42	37	42	39	34	39	37	32	37	34	0
		10:12	39.8	Non-Exposed	54	54	54	54	54	54	54	54	54	54	54	54	54	54	54	54	54	54	54	54	54	53	53	53	52	52	52	51	51	51	50	50	47	49	49	44	48	47	41	47	44	38
				Exposed	54	54	54	54	54	54	54	54	54	54	54	54	54	54	54	54	54	52	54	54	50	53	53	48	52	50	43	49	46	40	46	42	37	42	39	34	39	37	32	37	34	0
		11:12	42.5	Non-Exposed	56	56	56	56	56	56	56	56	56	56	56	56	56	56	56	56	56	56	56	56	56	55	55	55	54	54	54	53	53	51	52	52	47	50	50	44	49	47	41	47	44	38
				Exposed	56	56	56	56	56	56	56	56	56	56	56	56	56	56	55	56	56	52	56	56	50	55	54	47	54	50	43	49	46	40	45	42	37	42	39	34	39	37	32	37	34	0
		12:12	45	Non-Exposed	58	58	58	58	58	58	58	58	58	58	58	58	58	58	58	58	58	58	58	58	58	57	57	57	56	56	55	55	55	51	53	53	47	52	50	44	51	47	41	47	44	38
				Exposed	58	58	58	58	58	58	58	58	58	58	58	58	58	58	55	58	58	52	58	57	50	57	54	47	54	49	43	49	46	40	45	42	37	42	39	34	39	37	32	37	34	0
		Flat	0	Non-Exposed	51	51	51	51	51	51	51	51	51	51	51	51	51	51	51	51	51	51	51	51	51	51	51	48	51	51	44	51	49	40	51	45	37	51	42	35	47	39	33	44	37	0
				Exposed	51	51	51	51	51	51	51	51	49	51	51	46	51	51	44	51	50	41	51	48	39	51	46	37	50	42	34	46	38	32	43	36	0	40	33	0	37	31	0	35	0	0
		1:12	4.8	Non-Exposed	48	48	48	48	48	48	48	48	48	48	48	48	48	48	48	48	48	48	48	48	48	48	48	48	48	48	44	48	48	40	48	45	37	48	42	35	47	39	33	44	37	0
				Exposed	48	48	48	48	48	48	48	48	48	48	48	46	48	48	43	48	48	41	48	48	39	48	45	37	48	42	34	46	38	32	43	35	0	40	33	0	37	31	0	35	0	0
		2:12	9.5	Non-Exposed	45	45	45	45	45	45	45	45	45	45	45	45	45	45	45	45	45	45	45	45	45	45	45	45	45	45	41	45	42	37	45	39	35	45	36	33	42	34	0	40	32	0
				Exposed	45	45	45	45	45	45	45	45	45	45	45	43	45	45	41	45	43	38	45	41	36	45	39	35	45	35	32	41	33	0	38	0	0	36	0	0	34	0	0	32	0	0
		3:12	14.0	Non-Exposed	43	43	43	43	43	43	43	43	43	43	43	43	43	43	43	43	43	43	43	43	43	43	43	43	43	43	41	43	42	37	43	39	35	43	36	33	42	34	0	40	32	0
				Exposed	43	43	43	43	43	43	43	43	43	43	43	43	43	43	41	43	43	38	43	41	36	43	39	35	43	35	32	41	33	0	38	0	0	36	0	0	34	0	0	32	0	0
		4:12	18.4	Non-Exposed	43	43	43	43	43	43	43	43	43	43	43	43	43	43	43	43	43	43	43	43	43	43	43	43	43	43	41	43	42	37	43	39	35	43	36	32	42	34	0	39	32	0
				Exposed	43	43	43	43	43	43	43	43	43	43	43	43	43	40	43	43	38	43	41	36	43	39	35	43	35	32	41	33	0	38	0	0	36	0	0	34	0	0	32	0	0
		5:12	22.6	Non-Exposed	44	44	44	44	44	44	44	44	44	44	44	44	44	44	44	44	44	44	44	44	44	44	44	44	44	44	44	44	42	42	44	43	39	44	40	36	44	37	34	44	35	32
				Exposed	44	44	44	44	44	44	44	44	44	44	44	44	44	44	44	44	44	44	44	44	41	44	43	39	44	40	36	44	36	33	44	34	31	42	32	0	39	0	0	37	0	0
	D	6:12	26.6	Non-Exposed	46	46	46	46	46	46	46	46	46	46	46	46	46	46	46	46	46	46	46	46	46	46	46	46	46	46	46	46	42	42	46	43	39	46	40	36	45	37	34	45	35	32
				Exposed	46	46	46	46	46	46	46	46	46	46	46	46	46	46	46	46	43	46	45	41	46	43	39	46	39	36	46	36	33	45	34	0	42	32	0	39	0	0	37	0	0
		7:12	30.3	Non-Exposed	47	47	47	47	47	47	47	47	47	47	47	47	47	47	47	47	47	47	47	47	47	47	47	47	46	46	46	45	45	45	44	44	43	43	43	40	42	42	37	42	40	35
				Exposed	47	47	47	47	47	47	47	47	47	47	47	47	47	47	47	47	47	47	47	47	45	47	47	43	46	45	39	45	41	36	41	38	34	38	36	31	35	34	0	33	32	0
		8:12	33.7	Non-Exposed	49	49	49	49	49	49	49	49	49	49	49	49	49	49	49	49	49	49	49	49	49	49	49	49	48	48	48	47	47	46	46	46	43	45	45	40	44	42	37	43	40	35
				Exposed	49	49	49	49	49	49	49	49	49	49	49	49	49	49	49	49	49	48	49	49	45	49	49	43	48	45	39	45	41	36	41	38	34	38	36	31	35	33	0	33	32	0
		9:12	36.9	Non-Exposed	51	51	51	51	51	51	51	51	51	51	51	51	51	51	51	51	51	51	51	51	51	50	50	50	49	49	49	48	48	46	47	47	43	46	45	40	45	42	37	43	40	35
				Exposed	51	51	51	51	51	51	51	51	51	51	51	51	51	51	50	51	51	47	51	51	45	50	49	43	49	45	39	45	41	36	41	38	34	38	35	31	35	33	0	33	32	0
		10:12	39.8	Non-Exposed	54	54	54	54	54	54	54	54	54	54	54	54	54	54	54	53	53	53	53	53	53	52	52	52	51	51	50	50	50	46	48	48	43	47	45	40	46	42	37	43	40	35
				Exposed	54	54	54	54	54	54	54	54	54	54	54	53	54	54	50	53	53	47	53	51	45	52	49	43	49	45	39	44	41	36	41	38	34	38	35	31	35	33	0	33	32	0
		11:12	42.5	Non-Exposed	56	56	56	56	56	56	56	56	56	56	56	56	56	56	56	55	55	55	55	55	55	54	54	54	53	53	50	51	51	46	50	49	43	49	45	40	46	42	37	43	40	35
				Exposed	56	56	56	56	56	56	56	56	56	56	56	53	56	56	50	55	54	47	55	51	45	53	49	43	48	45	39	44	41	36	41	38	34	38	35	31	35	33	0	33	32	0
		12:12	45	Non-Exposed	58	58	58	58	58	58	58	58	58	58	58	58	58	58	58	57	57	57	57	57	57	56	56	55	54	54	50	53	52	46	52	49	43	49	45	40	45	42	37	42	39	35
				Exposed	58	58	58	58	58	58	58	58	55	58	58	52	58	57	50	57	54	47	56	51	45	53	49	43	48	45	39	44	41	36	41	38	34	38	35	31	35	33	0	33	32	0

Tamarack 2.3 Rail – Gable Flush-Mount on 30 Foot Maximum Mean Roof Height – Portrait – Panel Length = 80 Inches or Less

Ground Snow Load	Exposure Category	Roof Pitch	Roof Angle	Wind Speed (mph)	95			100			105			110			115			120			125			130			140			150			160			170			180			190		
				Roof Area	1	2	3	1	2	3	1	2	3	1	2	3	1	2	3	1	2	3	1	2	3	1	2	3	1	2	3	1	2	3	1	2	3	1	2	3	1	2	3	1	2	3
45	B	Flat	0	Non-Exposed	48	48	48	48	48	48	48	48	48	48	48	48	48	48	48	48	48	48	48	48	48	48	48	48	48	48	48	48	48	48	48	48	48	48	48	47	48	48	44	48	48	41
				Exposed	48	48	48	48	48	48	48	48	48	48	48	48	48	48	48	48	48	48	48	48	48	48	48	48	48	48	47	48	48	43	48	48	40	48	45	37	48	42	34	47	39	33
		1:12	4.8	Non-Exposed	45	45	45	45	45	45	45	45	45	45	45	45	45	45	45	45	45	45	45	45	45	45	45	45	45	45	45	45	45	45	45	45	45	45	45	45	45	45	44	45	45	41
				Exposed	45	45	45	45	45	45	45	45	45	45	45	45	45	45	45	45	45	45	45	45	45	45	45	45	45	45	45	45	45	43	45	45	40	45	45	37	45	42	34	45	39	33
		2:12	9.5	Non-Exposed	43	43	43	43	43	43	43	43	43	43	43	43	43	43	43	43	43	43	43	43	43	43	43	43	43	43	43	43	43	43	43	43	41	43	43	43	43	43	41	43	43	38
				Exposed	43	43	43	43	43	43	43	43	43	43	43	43	43	43	43	43	43	43	43	43	43	43	43	43	43	43	43	43	43	40	43	41	37	43	38	34	43	36	32	42	34	0
		3:12	14.0	Non-Exposed	41	41	41	41	41	41	41	41	41	41	41	41	41	41	41	41	41	41	41	41	41	41	41	41	41	41	41	41	41	41	41	41	41	41	41	41	41	41	41	41	41	38
				Exposed	41	41	41	41	41	41	41	41	41	41	41	41	41	41	41	41	41	41	41	41	41	41	41	41	41	41	41	41	41	40	41	41	37	41	38	34	41	35	32	41	34	0
		4:12	18.4	Non-Exposed	41	41	41	41	41	41	41	41	41	41	41	41	41	41	41	41	41	41	41	41	41	41	41	41	41	41	41	41	41	41	41	41	41	41	41	41	41	41	41	41	41	38
				Exposed	41	41	41	41	41	41	41	41	41	41	41	41	41	41	41	41	41	41	41	41	41	41	41	41	41	41	41	41	41	40	41	41	37	41	38	34	41	35	32	41	34	0
		5:12	22.6	Non-Exposed	42	42	42	42	42	42	42	42	42	42	42	42	42	42	42	42	42	42	42	42	42	42	42	42	42	42	42	42	42	42	42	42	42	42	42	42	42	42	42	42	42	42
				Exposed	42	42	42	42	42	42	42	42	42	42	42	42	42	42	42	42	42	42	42	42	42	42	42	42	42	42	42	42	42	42	42	42	42	42	42	39	42	40	36	42	37	34
		6:12	26.6	Non-Exposed	43	43	43	43	43	43	43	43	43	43	43	43	43	43	43	43	43	43	43	43	43	43	43	43	43	43	43	43	43	43	43	43	43	43	43	43	43	43	43	43	43	43
				Exposed	43	43	43	43	43	43	43	43	43	43	43	43	43	43	43	43	43	43	43	43	43	43	43	43	43	43	43	43	43	42	43	42	38	43	40	36	43	37	34	43	37	34
		7:12	30.3	Non-Exposed	45	45	45	45	45	45	45	45	45	45	45	45	45	45	45	45	45	45	45	45	45	45	45	45	45	45	45	45	45	45	45	45	45	45	45	45	45	45	44	44	44	44
				Exposed	45	45	45	45	45	45	45	45	45	45	45	45	45	45	45	45	45	45	45	45	45	45	45	45	45	45	45	45	45	45	45	45	42	45	45	42	45	45	40	44	42	37
		8:12	33.7	Non-Exposed	47	47	47	47	47	47	47	47	47	47	47	47	47	47	47	47	47	47	47	47	47	47	47	47	47	47	47	47	47	47	47	47	47	47	47	47	47	47	47	47	47	47
				Exposed	47	47	47	47	47	47	47	47	47	47	47	47	47	47	47	47	47	47	47	47	47	47	47	47	47	47	47	47	47	47	47	47	46	47	47	42	46	45	39	45	42	37
		9:12	36.9	Non-Exposed	49	49	49	49	49	49	49	49	49	49	49	49	49	49	49	49	49	49	49	49	49	49	49	49	49	49	49	49	49	49	49	49	49	48	48	48	47	47	47	47	47	47
				Exposed	49	49	49	49	49	49	49	49	49	49	49	49	49	49	49	49	49	49	49	49	49	49	49	49	49	49	49	49	49	49	49	49	45	48	48	42	47	45	39	45	42	37
		10:12	39.8	Non-Exposed	51	51	51	51	51	51	51	51	51	51	51	51	51	51	51	51	51	51	51	51	51	51	51	51	51	51	51	51	51	51	51	51	50	50	50	49	49	49	49	48	48	47
				Exposed	51	51	51	51	51	51	51	51	51	51	51	51	51	51	51	51	51	51	51	51	51	51	51	51	51	51	51	51	51	49	51	51	45	50	48	42	49	45	39	45	42	37
		11:12	42.5	Non-Exposed	54	54	54	54	54	54	54	54	54	54	54	54	54	54	54	54	54	54	54	54	54	54	54	54	54	54	54	54	54	54	53	53	53	52	52	52	51	51	50	50	50	47
				Exposed	54	54	54	54	54	54	54	54	54	54	54	54	54	54	54	54	54	54	54	54	54	54	54	54	54	54	53	54	54	49	53	52	45	52	48	42	49	45	39	45	42	37
		12:12	45	Non-Exposed	56	56	56	56	56	56	56	56	56	56	56	56	56	56	56	56	56	56	56	56	56	56	56	56	56	56	56	56	56	56	55	55	55	54	54	54	53	53	50	52	52	47
				Exposed	56	56	56	56	56	56	56	56	56	56	56	56	56	56	56	56	56	56	56	56	53	56	56	49	55	52	45	52	48	42	48	45	39	45	42	37
	C	Flat	0	Non-Exposed	48	48	48	48	48	48	48	48	48	48	48	48	48	48	48	48	48	48	48	48	48	48	48	48	48	48	48	48	48	45	48	48	41	48	47	38	48	44	36	48	41	34
				Exposed	48	48	48	48	48	48	48	48	48	48	48	48	48	48	48	48	48	46	48	48	44	48	48	42	48	46	38	48	42	35	47	39	33	44	37	0	41	34	0	38	32	0
		1:12	4.8	Non-Exposed	45	45	45	45	45	45	45	45	45	45	45	45	45	45	45	45	45	45	45	45	45	45	45	45	45	45	45	45	45	45	45	45	41	45	45	38	45	43	36	45	41	34
				Exposed	45	45	45	45	45	45	45	45	45	45	45	45	45	45	45	45	45	45	45	45	44	45	45	41	45	45	38	45	42	35	45	39	33	44	36	0	41	34	0	38	32	0
		2:12	9.5	Non-Exposed	43	43	43	43	43	43	43	43	43	43	43	43	43	43	43	43	43	43	43	43	43	43	43	43	43	43	43	43	43	42	43	43	38	43	40	36	43	37	33	43	35	32
				Exposed	43	43	43	43	43	43	43	43	43	43	43	43	43	43	43	43	43	43	43	43	41	43	43	39	43	39	35	43	36	33	42	34	0	39	32	0	37	0	0	35	0	0
		3:12	14.0	Non-Exposed	41	41	41	41	41	41	41	41	41	41	41	41	41	41	41	41	41	41	41	41	41	41	41	41	41	41	41	41	41	41	41	41	38	41	40	35	41	37	33	41	35	32
				Exposed	41	41	41	41	41	41	41	41	41	41	41	41	41	41	41	41	41	41	41	41	41	41	41	39	41	39	35	41	36	33	41	34	0	39	32	0	37	0	0	35	0	0
		4:12	18.4	Non-Exposed	41	41	41	41	41	41	41	41	41	41	41	41	41	41	41	41	41	41	41	41	41	41	41	41	41	41	41	41	41	41	41	41	38	41	40	35	41	37	33	41	35	32
				Exposed	41	41	41	41	41	41	41	41	41	41	41	41	41	41	41	41	41	40	41	41	39	41	39	35	41	36	33	41	34	0	39	32	0	37	0	0	35	0	0	35	0	0
		5:12	22.6	Non-Exposed	42	42	42	42	42	42	42	42	42	42	42	42	42	42	42	42	42	42	42	42	42	42	42	42	42	42	42	42	42	42	42	42	42	42	42	40	42	41	37	42	39	35
				Exposed	42	42	42	42	42	42	42	42	42	42	42	42	42	42	42	42	42	42	42	42	42	42	42	40	42	40	36	42	37	34	42	35	31	42	33	0	41	0	0	40	0	0
		6:12	26.6	Non-Exposed	43	43	43	43	43	43	43	43	43	43	43	43	43	43	43	43	43	43	43	43	43	43	43	43	43	43	43	43	43	43	43	43	43	43	43	40	43	41	37	43	39	35
				Exposed	43	43	43	43	43	43	43	43	43	43	43	43	43	43	43	43	43	43	43	43	43	43	43	40	43	40	36	43	37	34	43	35	31	43	33	0	40	0	0	40	0	0
		7:12	30.3	Non-Exposed	45	45	45	45	45	45	45	45	45	45	45	45	45	45	45	45	45	45	45	45	45	45	45	45	45	45	45	45	45	45	44	44	44	43	43	43	42	42	41	41	41	39
				Exposed	45	45	45	45	45	45	45	45	45	45	45	45	45	45	45	45	45	45	45	45	44	45	45	40	44	42	37	42	39	35	39	37	32	37	35	0						
		8:12	33.7	Non-Exposed	47	47	47	47	47	47	47	47	47	47	47	47	47	47	47	47	47	47	47	47	47	47	47	47	47	47	47	46	46	46	45	45	45	44	44	44	44	44	41	43	43	38
				Exposed	47	47	47	47	47	47	47	47	47	47	47	47	47	47	47	47	47	47	47	47	44	46	46	40	45	42	37	42	39	35	39	37	32	37	35	0						
		9:12	36.9	Non-Exposed	49	49	49	49	49	49	49	49	49	49	49	49	49	49	49	49	49	49	49	49	49	49	49	49	49	49	49	48	48	48	47	47	47	46	46	44	45	45	41	44	44	38
				Exposed	49	49	49	49	49	49	49	49	49	49	49	49	49	49	49	49	49	49	49	49	49	49	49	48	49	49	44	48	46	40	46	42	37	42	39	34	39	37	32	37	34	0
		10:12	39.8	Non-Exposed	51	51	51	51	51	51	51	51	51	51	51	51	51	51	51	51	51	51	51	51	51	51	51	50	50	50	49	49	49	48	48	47	47	47	44	46	46	41	45	44	38
				Exposed	51	51	51	51	51	51	51	51	51	51	51	51	51	51	51	51	51	51	51	51	50	51	51	48	50	50	43	49	46	40	46	42	37	42	39	34	39	37	32	37	34	0
		11:12	42.5	Non-Exposed	54	54	54	54	54	54	54	54	54	54	54	54	54	54	54	54	54	54	54	54	54	53	53	53	52	52	52	51	51	51	50	50	47	49	49	44	48	47	41	47	44	38
				Exposed	54	54	54	54	54	54	54	54	54	54	54	54	54	54	54	54	54	52	54	54	50	53	53	47	52	50	43	49	46	40	45	42	37	42	39	34	39	37	32	37	34	0
		12:12	45	Non-Exposed	56	56	56	56	56	56	56	56	56	56	56	56	56	56	56	56	56	56	56	56	56	55	55	55	54	54	54	53	53	51	52	52	47	50	50	44	49	47	41	47	44	38
				Exposed	56	56	56	56	56	56	56	56	56	56	56	56	56	56	55	56	56	52	56	56	50	55	54	47	54	49	43	49	46	40	45	42	37	42	39	34	39	37	32	37	34	0
	D	Flat	0	Non-Exposed	48	48	48	48	48	48	48	48	48	48	48	48	48	48	48	48	48	48	48	48	48	48	48	48	48	48	44	48	48	40	48	45	37	48	42	35	47	39	33	44	37	0
				Exposed	48	48	48	48	48	48	48	48	48	48	48	46	48	48	44	48	48	41	48	48	39	48	46	37	48	42	34	46	38	32	43	36	0	40	33	0	37	31	0	35	0	0
		1:12	4.8	Non-Exposed	45	45	45	45	45	45	45	45	45	45	45	45	45	45	45	45	45	45	45	45	45	45	45	45	45	45	44	45	45	40	45	45	37	45	42	35	45	39	33	44	37	0
				Exposed	45	45	45	45	45	45	45	45	45	45	45	45	45	45	43	45	45	41	45	45	39	45	45	37	45	42	34	45	38	32	43	35	0	40	33	0	37	31	0	35	0	0
		2:12	9.5	Non-Exposed	43	43	43	43	43	43	43	43	43	43	43	43	43	43	43	43	43	43	43	43	43	43	43	43	43	43	41	43	42	37	43	39	35	43	36	33	42	34	0	40	32	0
				Exposed	43	43	43	43	43	43	43	43	43	43	43	43	43	43	41	43	43	38	43	41	36	43	39	35	43	35	32	41	33	0	38	0	0	36	0	0	34	0	0	32	0	0
		3:12	14.0	Non-Exposed	41	41	41	41	41	41	41	41	41	41	41	41	41	41	41	41	41	41	41	41	41	41	41	41	41	41	41	41	41	37	41	39	35	41	36	33	41	34	0	40	32	0
				Exposed	41	41	41	41	41	41	41	41	41	41	41	41	41	41	41	41	41	38	41	41	36	41	39	35	41	35	32	41	33	0	38	0	0	36	0	0	34	0	0	32	0	0
		4:12	18.4	Non-Exposed	41	41	41	41	41	41	41	41	41	41	41	41	41	41	41	41	41	41	41	41	41	41	41	41	41	41	41	41	41	37	41	39	35	41	36	32	41	34	0	39	32	0
				Exposed	41	41	41	41	41	41	41	41	41	41	41	41	40	41	41	38	41	41	36	41	39	35	41	35	32	41	33	0	38	0	0	36	0	0	34	0	0	32	0	0		
		5:12	22.6	Non-Exposed	42	42	42	42	42	42	42	42	42	42	42	42	42	42	42	42	42	42	42	42	42	42	42	42	42	42	42	42	42	42	42	42	39	42	40	36	42	37	34	42	35	32
				Exposed	42	42	42	42	42	42	42	42	42	42	42	42	42	42	42	42	42	42	42	42	41	42	42	39	42	40	36	42	36	33	42	34	31	42	32	0	39	0	0	37	0	0
		6:12	26.6	Non-Exposed	43	43	43	43	43	43	43	43	43	43	43	43	43	43	43	43	43	43	43	43	43	43	43	43	43	43	43	43	43	42	43	43	39	43	40	36	43	37	34	43	35	32
				Exposed	43	43	43	43	43	43	43	43	43	43	43	43	43	43	43	43	43	43	43	43	41	43	43	39	43	39	36	43	36	33	43	34	0	42	32	0	39	0	0	37	0	0
		7:12	30.3	Non-Exposed	45	45	45	45	45	45	45	45	45	45	45	45	45	45	45	45	45	45	45	45	45	45	45	45	45	45	45	44	44	44	43	43	43	42	42	40	41	41	37	40	40	35
				Exposed	45	45	45	45	45	45	45	45	45	45	45	45	45	45	45	45	45	45	45	45	45	45	45	43	45	45	39	44	41	36	41	38	34	38	36	31	35	34	0	33	32	0
		8:12	33.7	Non-Exposed	47	47	47	47	47	47	47	47	47	47	47	47	47	47	47	47	47	47	47	47	47	47	47	47	46	46	46	45	45	45	44	44	43	43	43	40	42	42	37	41	40	35
				Exposed	47	47	47	47	47	47	47	47	47	47	47	47	47	47	47	47	47	45	47	47	43	46	45	39	45	41	36	41	38	34	38	36	31	35	33	0	33	32	0			
		9:12	36.9	Non-Exposed	49	49	49	49	49	49	49	49	49	49	49	49	49	49	49	49	49	49	49	49	49	48	48	48	47	47	47	46	46	46	45	45	43	44	44	40	43	42	37	42	40	35
				Exposed	49	49	49	49	49	49	49	49	49	49	49	49	49	49	49	49	49	47	49	49	45	48	48	43	47	45	39	45	41	36	41	38	34	38	35	31	35	33	0	33	32	0
		10:12	39.8	Non-Exposed	51	51	51	51	51	51	51	51	51	51	51	51	51	51	51	51	51	51	51	51	51	50	50	50	49	49	49	48	48	46	47	47	43	46	45	40	45	42	37	43	40	35
				Exposed	51	51	51	51	51	51	51	51	51	51	51	51	51	51	50	51	51	47	51	51	45	50	49	43	49	45	39	44	41	36	41	38	34	38	35	31	35	33	0	33	32	0
		11:12	42.5	Non-Exposed	54	54	54	54	54	54	54	54	54	54	54	54	54	54	54	53	53	53	53	53	53	52	52	52	51	51	50	50	50	46	48	48	43	47	45	40	46	42	37	43	40	35
				Exposed	54	54	54	54	54	54	54	54	54	54	54	53	54	54	50	53	53	47	53	51	45	52	49	43	48	45	39	44	41	36	41	38	34	38	35	31	35	33	0	33	32	0
		12:12	45	Non-Exposed	56	56	56	56	56	56	56	56	56	56	56	56	56	56	56	55	55	55	55	55	55	54	54	54	53	53	50	51	51	46	50	49	43	49	45	40	45	42	37	42	39	35
				Exposed	56	56	56	56	56	56	56	56	55	56	56	52	56	56	50	55	54	47	55	51	45	53	49	43	48	45	39	44	41	36	41	38	34	38	35	31	35	33	0	33	32	0

Tamarack 2.3 Rail – Gable Flush-Mount on 30 Foot Maximum Mean Roof Height – Portrait – Panel Length = 80 Inches or Less

Ground Snow Load	Exposure Category	Roof Pitch	Roof Angle	Wind Speed (mph)	95			100			105			110			115			120			125			130			140			150			160			170			180			190		
				Roof Area	1	2	3	1	2	3	1	2	3	1	2	3	1	2	3	1	2	3	1	2	3	1	2	3	1	2	3	1	2	3	1	2	3	1	2	3	1	2	3	1	2	3
50	B	Flat	0	Non-Exposed	46	46	46	46	46	46	46	46	46	46	46	46	46	46	46	46	46	46	46	46	46	46	46	46	46	46	46	46	46	46	46	46	46	46	46	46	46	46	44	46	46	41
				Exposed	46	46	46	46	46	46	46	46	46	46	46	46	46	46	46	46	46	46	46	46	46	46	46	46	46	46	46	46	46	43	46	46	40	46	45	37	46	42	34	46	39	33
		1:12	4.8	Non-Exposed	43	43	43	43	43	43	43	43	43	43	43	43	43	43	43	43	43	43	43	43	43	43	43	43	43	43	43	43	43	43	43	43	43	43	43	43	43	43	43	43	43	41
				Exposed	43	43	43	43	43	43	43	43	43	43	43	43	43	43	43	43	43	43	43	43	43	43	43	43	43	43	43	43	43	43	43	43	40	43	43	37	43	42	34	43	39	33
		2:12	9.5	Non-Exposed	41	41	41	41	41	41	41	41	41	41	41	41	41	41	41	41	41	41	41	41	41	41	41	41	41	41	41	41	41	41	41	41	41	41	41	41	41	41	41	41	41	38
				Exposed	41	41	41	41	41	41	41	41	41	41	41	41	41	41	41	41	41	41	41	41	41	41	41	41	41	41	41	41	41	40	41	41	37	41	38	34	41	36	32	41	34	0
		3:12	14.0	Non-Exposed	39	39	39	39	39	39	39	39	39	39	39	39	39	39	39	39	39	39	39	39	39	39	39	39	39	39	39	39	39	39	39	39	39	39	39	39	39	39	39	39	39	38
				Exposed	39	39	39	39	39	39	39	39	39	39	39	39	39	39	39	39	39	39	39	39	39	39	39	39	39	39	39	39	39	37	39	38	34	39	35	32	39	34	0			
		4:12	18.4	Non-Exposed	39	39	39	39	39	39	39	39	39	39	39	39	39	39	39	39	39	39	39	39	39	39	39	39	39	39	39	39	39	39	39	39	39	39	39	39	39	39	39	39	39	38
				Exposed	39	39	39	39	39	39	39	39	39	39	39	39	39	39	39	39	39	39	39	39	39	39	39	39	39	39	39	39	39	37	39	38	34	39	35	32	39	34	0			
		5:12	22.6	Non-Exposed	40	40	40	40	40	40	40	40	40	40	40	40	40	40	40	40	40	40	40	40	40	40	40	40	40	40	40	40	40	40	40	40	40	40	40	40	40	40	40	40	40	40
				Exposed	40	40	40	40	40	40	40	40	40	40	40	40	40	40	40	40	40	40	40	40	40	40	40	40	40	40	40	40	40	40	40	40	40	40	40	39	40	40	36	40	37	34
		6:12	26.6	Non-Exposed	41	41	41	41	41	41	41	41	41	41	41	41	41	41	41	41	41	41	41	41	41	41	41	41	41	41	41	41	41	41	41	41	41	41	41	41	41	41	41	41	41	41
				Exposed	41	41	41	41	41	41	41	41	41	41	41	41	41	41	41	41	41	41	41	41	41	41	41	41	41	41	41	41	41	41	41	41	38	41	40	36	41	37	34	41	39	34
		7:12	30.3	Non-Exposed	43	43	43	43	43	43	43	43	43	43	43	43	43	43	43	43	43	43	43	43	43	43	43	43	43	43	43	43	43	43	43	43	43	43	43	43	43	43	42	42	42	42
				Exposed	43	43	43	43	43	43	43	43	43	43	43	43	43	43	43	43	43	43	43	43	43	43	43	43	43	43	43	43	43	43	43	43	40	43	43	37	43	42	34	43	39	33
		8:12	33.7	Non-Exposed	44	44	44	44	44	44	44	44	44	44	44	44	44	44	44	44	44	44	44	44	44	44	44	44	44	44	44	44	44	44	44	44	44	44	44	44	44	44	44	44	44	44
				Exposed	44	44	44	44	44	44	44	44	44	44	44	44	44	44	44	44	44	44	44	44	44	44	44	44	44	44	44	44	44	42	44	44	42	44	44	42	44	44	39	44	42	37
		9:12	36.9	Non-Exposed	46	46	46	46	46	46	46	46	46	46	46	46	46	46	46	46	46	46	46	46	46	46	46	46	46	46	46	46	46	46	46	46	46	46	46	46	45	45	45	45	45	45
				Exposed	46	46	46	46	46	46	46	46	46	46	46	46	46	46	46	46	46	46	46	46	46	46	46	46	46	46	46	46	46	45	46	46	42	46	45	39	46	45	39	45	42	37
		10:12	39.8	Non-Exposed	49	49	49	49	49	49	49	49	49	49	49	49	49	49	49	49	49	49	49	49	49	49	49	49	49	49	49	49	49	49	49	49	49	48	48	48	47	47	47	47	47	47
				Exposed	49	49	49	49	49	49	49	49	49	49	49	49	49	49	49	49	49	49	49	49	49	49	49	49	49	49	49	49	49	45	48	48	42	47	45	39	45	42	37			
		11:12	42.5	Non-Exposed	51	51	51	51	51	51	51	51	51	51	51	51	51	51	51	51	51	51	51	51	51	51	51	51	51	51	51	51	51	51	50	50	50	49	49	49	49	49	49	48	48	47
				Exposed	51	51	51	51	51	51	51	51	51	51	51	51	51	51	51	51	51	51	51	51	51	51	51	51	51	51	51	51	51	49	51	51	45	50	48	42	49	45	39	45	42	37
		12:12	45	Non-Exposed	54	54	54	54	54	54	54	54	54	54	54	54	54	54	54	54	54	54	54	54	54	54	54	54	54	54	54	54	54	54	53	53	53	52	52	52	51	51	50	50	50	47
				Exposed	54	54	54	54	54	54	54	54	54	54	54	54	54	54	54	54	54	54	54	54	53	54	54	49	53	52	45	52	48	42	48	45	39	45	42	37						
	C	Flat	0	Non-Exposed	46	46	46	46	46	46	46	46	46	46	46	46	46	46	46	46	46	46	46	46	46	46	46	46	46	46	46	46	46	45	46	46	41	46	46	38	46	44	36	46	41	34
				Exposed	46	46	46	46	46	46	46	46	46	46	46	46	46	46	46	46	46	44	46	46	42	46	46	38	46	42	35	46	39	33	44	37	0	41	34	0	38	32	0			
		1:12	4.8	Non-Exposed	43	43	43	43	43	43	43	43	43	43	43	43	43	43	43	43	43	43	43	43	43	43	43	43	43	43	43	43	43	41	43	43	38	43	43	36	43	41	34			
				Exposed	43	43	43	43	43	43	43	43	43	43	43	43	43	43	43	43	43	43	43	43	41	43	43	38	43	42	35	43	39	33	43	36	0	41	34	0	38	32	0			
		2:12	9.5	Non-Exposed	41	41	41	41	41	41	41	41	41	41	41	41	41	41	41	41	41	41	41	41	41	41	41	41	41	41	41	41	41	38	41	40	36	41	37	33	41	35	32			
				Exposed	41	41	41	41	41	41	41	41	41	41	41	41	41	41	41	41	41	41	41	41	39	41	39	35	41	36	33	41	34	0	39	32	0	37	0	0	35	0	0			
		3:12	14.0	Non-Exposed	39	39	39	39	39	39	39	39	39	39	39	39	39	39	39	39	39	39	39	39	39	39	39	39	39	39	39	39	39	38	39	39	35	39	37	33	39	35	32			
				Exposed	39	39	39	39	39	39	39	39	39	39	39	39	39	39	39	39	39	39	39	39	35	39	39	35	39	36	33	39	34	0	39	32	0	37	0	0	35	0	0			
		4:12	18.4	Non-Exposed	39	39	39	39	39	39	39	39	39	39	39	39	39	39	39	39	39	39	39	39	39	39	39	39	39	39	39	39	39	38	39	39	35	39	37	33	39	35	32			
				Exposed	39	39	39	39	39	39	39	39	39	39	39	39	39	39	39	39	39	39	39	39	35	39	39	35	39	36	33	39	34	0	39	32	0	37	0	0	35	0	0			
		5:12	22.6	Non-Exposed	40	40	40	40	40	40	40	40	40	40	40	40	40	40	40	40	40	40	40	40	40	40	40	40	40	40	40	40	40	40	40	40	40	40	40	37	40	39	35			
				Exposed	40	40	40	40	40	40	40	40	40	40	40	40	40	40	40	40	40	40	40	40	40	40	40	36	40	37	34	40	35	31	40	33	0	40	0	0						
		6:12	26.6	Non-Exposed	41	41	41	41	41	41	41	41	41	41	41	41	41	41	41	41	41	41	41	41	41	41	41	41	41	41	41	41	41	41	41	41	40	41	41	37	41	39	35			
				Exposed	41	41	41	41	41	41	41	41	41	41	41	41	41	41	41	41	41	41	41	41	40	41	40	36	41	37	34	41	35	31	41	33	0	40	0	0						
		7:12	30.3	Non-Exposed	43	43	43	43	43	43	43	43	43	43	43	43	43	43	43	43	43	43	43	43	43	43	43	43	43	43	43	42	42	42	42	42	42	41	41	41	40	40	39			
				Exposed	43	43	43	43	43	43	43	43	43	43	43	43	43	43	43	43	43	43	43	43	43	43	43	40	42	42	37	42	39	35	39	37	32	37	35	0						
		8:12	33.7	Non-Exposed	44	44	44	44	44	44	44	44	44	44	44	44	44	44	44	44	44	44	44	44	44	44	44	44	44	44	44	44	44	44	43	43	43	42	42	41	41	41	38			
				Exposed	44	44	44	44	44	44	44	44	44	44	44	44	44	44	44	44	44	44	44	44	44	44	44	40	44	42	37	42	39	35	39	37	32	37	35	0						
		9:12	36.9	Non-Exposed	46	46	46	46	46	46	46	46	46	46	46	46	46	46	46	46	46	46	46	46	46	46	46	46	46	46	46	45	45	45	44	44	43	43	43	41	43	43	38			
				Exposed	46	46	46	46	46	46	46	46	46	46	46	46	46	46	46	46	46	46	46	46	44	46	46	40	45	42	37	42	39	34	39	37	32	37	34	0						
		10:12	39.8	Non-Exposed	49	49	49	49	49	49	49	49	49	49	49	49	49	49	49	49	49	49	49	49	49	49	49	49	48	48	48	47	47	47	46	46	44	45	45	41	44	44	38			
				Exposed	49	49	49	49	49	49	49	49	49	49	49	49	49	49	49	49	49	49	49	49	43	48	46	40	46	42	37	42	39	34	39	37	32	37	34	0						
		11:12	42.5	Non-Exposed	51	51	51	51	51	51	51	51	51	51	51	51	51	51	51	51	51	51	51	51	50	50	50	49	49	48	48	47	47	47	44	46	46	41	45	44	38					
				Exposed	51	51	51	51	51	51	51	51	51	51	51	51	51	51	51	51	51	51	51	50	51	51	47	50	50	43	49	46	40	45	42	37	42	39	34	39	37	32	37	34	0			
		12:12	45	Non-Exposed	54	54	54	54	54	54	54	54	54	54	54	54	54	54	54	54	54	54	54	54	53	53	53	52	52	52	51	51	51	50	50	47	49	49	44	48	47	41	47	44	38	
				Exposed	54	54	54	54	54	54	54	54	54	54	54	54	54	54	54	54	54	52	54	54	50	53	53	47	52	49	43	49	46	40	45	42	37	42	39	34	39	37	32	37	34	0
	D	Flat	0	Non-Exposed	46	46	46	46	46	46	46	46	46	46	46	46	46	46	46	46	46	46	46	46	46	46	46	44	46	46	40	46	45	37	46	42	35	46	39	33	44	37	0			
				Exposed	46	46	46	46	46	46	46	46	46	46	46	46	46	44	46	46	41	46	46	39	46	46	37	46	42	34	46	38	32	43	36	0	40	33	0	37	31	0	35	0	0			
		1:12	4.8	Non-Exposed	43	43	43	43	43	43	43	43	43	43	43	43	43	43	43	43	43	43	43	43	43	43	43	43	43	43	40	43	43	37	43	42	35	43	39	33	43	37	0			
				Exposed	43	43	43	43	43	43	43	43	43	43	43	43	43	43	43	43	41	43	43	39	43	43	37	43	42	34	43	38	32	43	35	0	40	33	0	37	31	0	35	0	0			
		2:12	9.5	Non-Exposed	41	41	41	41	41	41	41	41	41	41	41	41	41	41	41	41	41	41	41	41	41	41	41	41	41	41	37	41	39	35	41	36	33	41	34	0	40	32	0			
				Exposed	41	41	41	41	41	41	41	41	41	41	41	41	41	41	41	41	38	41	41	36	41	39	35	41	35	32	41	33	0	38	0	0	36	0	0	34	0	0	32	0	0			
		3:12	14.0	Non-Exposed	39	39	39	39	39	39	39	39	39	39	39	39	39	39	39	39	39	39	39	39	39	39	39	39	39	39	37	39	39	35	39	36	33	39	34	0	39	32	0			
				Exposed	39	39	39	39	39	39	39	39	39	39	39	39	39	39	39	39	38	39	39	36	39	39	35	39	35	32	39	33	0	38	0	0	36	0	0	34	0	0	32	0	0			
		4:12	18.4	Non-Exposed	39	39	39	39	39	39	39	39	39	39	39	39	39	39	39	39	39	39	39	39	39	39	39	39	39	39	37	39	39	35	39	36	32	39	34	0	39	32	0			
				Exposed	39	39	39	39	39	39	39	39	39	39	39	39	39	39	39	39	38	39	39	36	39	39	35	39	35	32	39	33	0	38	0	0	36	0	0	34	0	0	32	0	0			
		5:12	22.6	Non-Exposed	40	40	40	40	40	40	40	40	40	40	40	40	40	40	40	40	40	40	40	40	40	40	40	40	40	40	40	40	40	39	40	40	36	40	37	34	40	35	32			
				Exposed	40	40	40	40	40	40	40	40	40	40	40	40	40	40	40	40	40	40	40	40	40	40	40	40	40	40	39	40	40	36	40	33	0	40	0	0	37	0	0			
		6:12	26.6	Non-Exposed	41	41	41	41	41	41	41	41	41	41	41	41	41	41	41	41	41	41	41	41	41	41	41	41	41	41	41	41	41	39	41	40	36	41	37	34	41	35	32			
				Exposed	41	41	41	41	41	41	41	41	41	41	41	41	41	41	41	41	41	41	41	41	39	41	39	36	41	36	33	41	34	0	41	32	0	39	0	0	37	0	0			
		7:12	30.3	Non-Exposed	43	43	43	43	43	43	43	43	43	43	43	43	43	43	43	43	43	43	43	43	43	43	43	43	43	43	43	42	42	42	41	41	41	41	41	40	40	40	37	39	39	35
				Exposed	43	43	43	43	43	43	43	43	43	43	43	43	43	43	43	43	43	43	43	43	43	43	43	39	42	41	36	41	38	34	38	36	31	35	34	0	33	32	0			
		8:12	33.7	Non-Exposed	44	44	44	44	44	44	44	44	44	44	44	44	44	44	44	44	44	44	44	44	44	44	44	44	44	43	43	43	43	43	43	42	42	40	41	41	37	40	40	35		
				Exposed	44	44	44	44	44	44	44	44	44	44	44	44	44	44	44	44	44	44	44	43	44	44	39	43	41	36	41	38	34	38	36	31	35	33	0	33	32	0			
		9:12	36.9	Non-Exposed	46	46	46	46	46	46	46	46	46	46	46	46	46	46	46	46	46	46	46	46	46	46	46	46	45	45	45	44	44	43	43	43	40	42	42	37	41	40	35			
				Exposed	46	46	46	46	46	46	46	46	46	46	46	46	46	46	46	46	46	46	46	45	46	46	43	46	45	39	45	41	36	41	38	34	38	35	31	35	33	0	33	32	0			
		10:12	39.8	Non-Exposed	49	49	49	49	49	49	49	49	49	49	49	49	49	49	49	49	49	49	49	49	48	48	48	47	47	47	46	46	46	45	45	43	44	44	40	43	42	37	42	40	35	
				Exposed	49	49	49	49	49	49	49	49	49	49	49	49	49	49	49	49	47	49	49	45	48	48	43	47	45	39	44	41	36	41	38	34	38	35	31	35	33	0	33	32	0			
		11:12	42.5	Non-Exposed	51	51	51	51	51	51	51	51	51	51	51	51	51	51	51	51	51	51	51	50	50	50	49	49	49	48	48	46	47	47	43	46	45	40	45	42	37	43	40	35		
				Exposed	51	51	51	51	51	51	51	51	51	51	51	51	51	50	51	51	47	51	51	45	50	49	43	48	45	39	44	41	36	41	38	34	38	35	31	35	33	0	33	32	0			
		12:12	45	Non-Exposed	54	54	54	54	54	54	54	54	54	54	54	54	54	54	54	54	53	53	53	53	53	53	52	52	52	51	51	50	50	50	46	49	49	43	47	45	40	45	42	37	42	39	35
				Exposed	54	54	54	54	54	54	54	54	54	54	54	52	54	54	50	53	53	47	53	51	45	52	49	43	48	45	39	44	41	36	41	38	34	38	35	31	35	33	0	33	32	0

Tamarack 2.3 Rail – Gable Flush-Mount on 30 Foot Maximum Mean Roof Height – Portrait – Panel Length = 80 Inches or Less

Ground Snow Load	Exposure Category	Roof Pitch	Roof Angle	Wind Speed (mph)	95			100			105			110			115			120			125			130			140			150			160			170			180			190		
				Roof Area	1	2	3	1	2	3	1	2	3	1	2	3	1	2	3	1	2	3	1	2	3	1	2	3	1	2	3	1	2	3	1	2	3	1	2	3	1	2	3	1	2	3
55	B	Flat	0	Non-Exposed	44	44	44	44	44	44	44	44	44	44	44	44	44	44	44	44	44	44	44	44	44	44	44	44	44	44	44	44	44	44	44	44	44	44	44	44	44	44	44	44	44	41
				Exposed	44	44	44	44	44	44	44	44	44	44	44	44	44	44	44	44	44	44	44	44	44	44	44	44	44	44	44	44	44	43	44	44	40	44	44	37	44	42	34	44	39	33
		1:12	4.8	Non-Exposed	41	41	41	41	41	41	41	41	41	41	41	41	41	41	41	41	41	41	41	41	41	41	41	41	41	41	41	41	41	41	41	41	41	41	41	41	41	41	41	41	41	41
				Exposed	41	41	41	41	41	41	41	41	41	41	41	41	41	41	41	41	41	41	41	41	41	41	41	41	41	41	41	41	41	41	41	41	40	41	41	37	41	41	34	41	39	33
		2:12	9.5	Non-Exposed	39	39	39	39	39	39	39	39	39	39	39	39	39	39	39	39	39	39	39	39	39	39	39	39	39	39	39	39	39	39	39	39	39	39	39	39	39	39	39	39	39	38
				Exposed	39	39	39	39	39	39	39	39	39	39	39	39	39	39	39	39	39	39	39	39	39	39	39	39	39	39	39	39	39	39	39	39	37	39	38	34	39	36	32	39	34	0
		3:12	14.0	Non-Exposed	37	37	37	37	37	37	37	37	37	37	37	37	37	37	37	37	37	37	37	37	37	37	37	37	37	37	37	37	37	37	37	37	37	37	37	37	37	37	37	37	37	37
				Exposed	37	37	37	37	37	37	37	37	37	37	37	37	37	37	37	37	37	37	37	37	37	37	37	37	37	37	37	37	37	34	37	37	37	37	37	34	37	35	32	37	34	0
		4:12	18.4	Non-Exposed	37	37	37	37	37	37	37	37	37	37	37	37	37	37	37	37	37	37	37	37	37	37	37	37	37	37	37	37	37	37	37	37	37	37	37	37	37	37	37	37	37	37
				Exposed	37	37	37	37	37	37	37	37	37	37	37	37	37	37	37	37	37	37	37	37	37	37	37	37	37	37	37	37	37	34	37	37	37	37	37	34	37	35	32	37	33	0
		5:12	22.6	Non-Exposed	38	38	38	38	38	38	38	38	38	38	38	38	38	38	38	38	38	38	38	38	38	38	38	38	38	38	38	38	38	38	38	38	38	38	38	38	38	38	38	38	38	38
				Exposed	38	38	38	38	38	38	38	38	38	38	38	38	38	38	38	38	38	38	38	38	38	38	38	38	38	38	38	38	38	38	38	38	38	38	38	38	38	38	36	38	37	34
		6:12	26.6	Non-Exposed	39	39	39	39	39	39	39	39	39	39	39	39	39	39	39	39	39	39	39	39	39	39	39	39	39	39	39	39	39	39	39	39	39	39	39	39	39	39	39	39	39	39
				Exposed	39	39	39	39	39	39	39	39	39	39	39	39	39	39	39	39	39	39	39	39	39	39	39	39	39	39	39	39	39	38	39	39	36	39	37	34	39	37	34	39	37	34
		7:12	30.3	Non-Exposed	41	41	41	41	41	41	41	41	41	41	41	41	41	41	41	41	41	41	41	41	41	41	41	41	41	41	41	41	41	41	41	41	41	41	41	41	41	41	41	41	41	41
				Exposed	41	41	41	41	41	41	41	41	41	41	41	41	41	41	41	41	41	41	41	41	41	41	41	41	41	41	41	41	41	41	41	41	41	41	41	41	41	41	41	41	41	37
		8:12	33.7	Non-Exposed	42	42	42	42	42	42	42	42	42	42	42	42	42	42	42	42	42	42	42	42	42	42	42	42	42	42	42	42	42	42	42	42	42	42	42	42	42	42	42	42	42	42
				Exposed	42	42	42	42	42	42	42	42	42	42	42	42	42	42	42	42	42	42	42	42	42	42	42	42	42	42	42	42	42	42	42	42	42	42	42	42	42	42	39	42	42	37
		9:12	36.9	Non-Exposed	44	44	44	44	44	44	44	44	44	44	44	44	44	44	44	44	44	44	44	44	44	44	44	44	44	44	44	44	44	44	44	44	44	44	44	44	44	44	44	44	44	44
				Exposed	44	44	44	44	44	44	44	44	44	44	44	44	44	44	44	44	44	44	44	44	44	44	44	44	44	44	44	44	44	44	44	44	44	44	44	42	44	44	39	44	42	37
		10:12	39.8	Non-Exposed	47	47	47	47	47	47	47	47	47	47	47	47	47	47	47	47	47	47	47	47	47	47	47	47	47	47	47	47	47	47	47	47	47	47	47	47	46	46	46	45	45	45
				Exposed	47	47	47	47	47	47	47	47	47	47	47	47	47	47	47	47	47	47	47	47	47	47	47	47	47	47	47	47	47	47	47	47	45	47	47	42	47	45	39	45	42	37
		11:12	42.5	Non-Exposed	49	49	49	49	49	49	49	49	49	49	49	49	49	49	49	49	49	49	49	49	49	49	49	49	49	49	49	49	49	49	49	49	49	49	49	49	49	48	48	48	47	47
				Exposed	49	49	49	49	49	49	49	49	49	49	49	49	49	49	49	49	49	49	49	49	49	49	49	49	49	49	49	49	49	49	49	49	45	49	48	42	48	45	39	45	42	37
		12:12	45	Non-Exposed	52	52	52	52	52	52	52	52	52	52	52	52	52	52	52	52	52	52	52	52	52	52	52	52	52	52	52	52	52	52	51	51	51	50	50	50	50	50	50	49	49	47
				Exposed	52	52	52	52	52	52	52	52	52	52	52	52	52	52	52	52	52	52	52	52	52	52	52	52	52	52	52	52	52	49	51	51	45	50	48	42	48	45	39	45	42	37
	C	Flat	0	Non-Exposed	44	44	44	44	44	44	44	44	44	44	44	44	44	44	44	44	44	44	44	44	44	44	44	44	44	44	44	44	44	44	44	44	41	44	44	38	44	44	36	44	41	34
				Exposed	44	44	44	44	44	44	44	44	44	44	44	44	44	44	44	44	44	44	44	44	42	44	44	38	44	42	35	44	39	33	44	37	0	41	34	0	38	32	0			
		1:12	4.8	Non-Exposed	41	41	41	41	41	41	41	41	41	41	41	41	41	41	41	41	41	41	41	41	41	41	41	41	41	41	41	41	41	41	41	41	38	41	41	38	41	41	36	41	41	34
				Exposed	41	41	41	41	41	41	41	41	41	41	41	41	41	41	41	41	41	41	41	41	41	41	41	38	41	41	35	41	39	33	41	36	0	41	34	0	38	32	0			
		2:12	9.5	Non-Exposed	39	39	39	39	39	39	39	39	39	39	39	39	39	39	39	39	39	39	39	39	39	39	39	39	39	39	39	39	39	38	39	39	36	39	37	33	39	35	32			
				Exposed	39	39	39	39	39	39	39	39	39	39	39	39	39	39	39	39	39	39	39	39	39	39	39	35	39	36	33	39	34	0	39	32	0	37	0	0	35	0	0			
		3:12	14.0	Non-Exposed	37	37	37	37	37	37	37	37	37	37	37	37	37	37	37	37	37	37	37	37	37	37	37	37	37	37	37	37	37	37	37	37	35	37	37	33	37	35	32			
				Exposed	37	37	37	37	37	37	37	37	37	37	37	37	37	37	37	37	37	37	37	37	37	37	37	35	37	36	33	37	34	0	37	32	0	37	0	0	35	0	0			
		4:12	18.4	Non-Exposed	37	37	37	37	37	37	37	37	37	37	37	37	37	37	37	37	37	37	37	37	37	37	37	37	37	37	37	37	37	37	37	37	35	37	37	33	37	35	32			
				Exposed	37	37	37	37	37	37	37	37	37	37	37	37	37	37	37	37	37	37	37	37	37	37	37	35	37	36	33	37	34	0	37	32	0	37	0	0	35	0	0			
		5:12	22.6	Non-Exposed	38	38	38	38	38	38	38	38	38	38	38	38	38	38	38	38	38	38	38	38	38	38	38	38	38	38	38	38	38	38	38	38	38	38	38	37	38	38	35			
				Exposed	38	38	38	38	38	38	38	38	38	38	38	38	38	38	38	38	38	38	38	38	38	38	38	38	38	38	36	38	37	34	38	35	31	38	33	0	38	0	0			
		6:12	26.6	Non-Exposed	39	39	39	39	39	39	39	39	39	39	39	39	39	39	39	39	39	39	39	39	39	39	39	39	39	39	39	39	39	39	39	39	39	39	39	37	39	39	35			
				Exposed	39	39	39	39	39	39	39	39	39	39	39	39	39	39	39	39	39	39	39	39	39	39	39	39	39	39	36	39	37	34	39	35	31	39	33	0	39	0	0			
		7:12	30.3	Non-Exposed	41	41	41	41	41	41	41	41	41	41	41	41	41	41	41	41	41	41	41	41	41	41	41	41	41	41	41	41	41	41	41	41	40	41	39	35	39	37	32			
				Exposed	41	41	41	41	41	41	41	41	41	41	41	41	41	41	41	41	41	41	41	41	41	41	41	41	41	41	40	41	41	37	40	39	35	39	37	32	37	35	0			
		8:12	33.7	Non-Exposed	42	42	42	42	42	42	42	42	42	42	42	42	42	42	42	42	42	42	42	42	42	42	42	42	42	42	42	42	42	42	42	42	42	42	42	41	41	41	40			
				Exposed	42	42	42	42	42	42	42	42	42	42	42	42	42	42	42	42	42	42	42	42	42	42	42	42	42	42	40	42	42	37	42	39	35	39	37	32	37	35	0			
		9:12	36.9	Non-Exposed	44	44	44	44	44	44	44	44	44	44	44	44	44	44	44	44	44	44	44	44	44	44	44	44	44	44	44	44	44	44	43	43	43	42	42	41	41	41	38			
				Exposed	44	44	44	44	44	44	44	44	44	44	44	44	44	44	44	44	44	44	44	44	44	44	44	44	44	44	40	44	42	37	42	39	34	39	37	32	37	34	0			
		10:12	39.8	Non-Exposed	47	47	47	47	47	47	47	47	47	47	47	47	47	47	47	47	47	47	47	47	47	47	47	47	47	47	46	46	46	45	45	45	44	44	44	44	41	43	38			
				Exposed	47	47	47	47	47	47	47	47	47	47	47	47	47	47	47	47	47	47	47	47	47	47	47	47	47	43	46	46	40	45	42	37	42	39	34	39	37	32	37	34	0			
		11:12	42.5	Non-Exposed	49	49	49	49	49	49	49	49	49	49	49	49	49	49	49	49	49	49	49	49	49	49	49	49	49	49	48	48	48	47	47	47	46	46	44	45	45	41	44	38			
				Exposed	49	49	49	49	49	49	49	49	49	49	49	49	49	49	49	49	49	49	49	49	49	49	49	47	49	49	43	48	46	40	45	42	37	42	39	34	39	37	32	37	34	0			
		12:12	45	Non-Exposed	52	52	52	52	52	52	52	52	52	52	52	52	52	52	52	52	52	52	52	52	52	52	52	51	51	51	50	50	50	49	49	47	48	48	44	47	47	41	46	44	38			
				Exposed	52	52	52	52	52	52	52	52	52	52	52	52	52	52	52	52	52	52	52	52	50	52	52	47	51	49	43	49	46	40	45	42	37	42	39	34	39	37	32	37	34	0			
	D	Flat	0	Non-Exposed	44	44	44	44	44	44	44	44	44	44	44	44	44	44	44	44	44	44	44	44	44	44	44	44	44	44	44	44	44	40	44	44	37	44	42	35	44	39	33	44	37	0
				Exposed	44	44	44	44	44	44	44	44	44	44	44	44	44	44	44	44	44	41	44	44	39	44	44	37	44	42	34	44	38	32	43	36	0	40	33	0	37	31	0	35	0	0
		1:12	4.8	Non-Exposed	41	41	41	41	41	41	41	41	41	41	41	41	41	41	41	41	41	41	41	41	41	41	41	41	41	41	41	41	41	40	41	41	37	41	41	35	41	39	33	41	37	0
				Exposed	41	41	41	41	41	41	41	41	41	41	41	41	41	41	41	41	41	41	41	41	39	41	41	37	41	41	34	41	38	32	41	35	0	40	33	0	37	31	0	35	0	0
		2:12	9.5	Non-Exposed	39	39	39	39	39	39	39	39	39	39	39	39	39	39	39	39	39	39	39	39	39	39	39	39	39	39	39	39	39	37	39	39	35	39	36	33	39	34	0	39	32	0
				Exposed	39	39	39	39	39	39	39	39	39	39	39	39	39	39	39	39	39	38	39	39	36	39	39	35	39	35	32	39	33	0	38	0	0	36	0	0	34	0	0	32	0	0
		3:12	14.0	Non-Exposed	37	37	37	37	37	37	37	37	37	37	37	37	37	37	37	37	37	37	37	37	37	37	37	37	37	37	37	37	37	35	37	36	33	37	34	0	37	32	0			
				Exposed	37	37	37	37	37	37	37	37	37	37	37	37	37	37	37	37	37	36	37	37	35	37	35	32	37	33	0	37	0	0	36	0	0	34	0	0	32	0	0			
		4:12	18.4	Non-Exposed	37	37	37	37	37	37	37	37	37	37	37	37	37	37	37	37	37	37	37	37	37	37	37	37	37	37	37	37	37	35	37	36	32	37	34	0	37	32	0			
				Exposed	37	37	37	37	37	37	37	37	37	37	37	37	37	37	37	37	37	36	37	37	35	37	35	32	37	33	0	37	0	0	36	0	0	34	0	0	32	0	0			
		5:12	22.6	Non-Exposed	38	38	38	38	38	38	38	38	38	38	38	38	38	38	38	38	38	38	38	38	38	38	38	38	38	38	38	38	38	38	38	38	36	38	37	34	38	35	32			
				Exposed	38	38	38	38	38	38	38	38	38	38	38	38	38	38	38	38	38	38	38	38	36	38	36	33	38	34	31	38	32	0	38	0	0	37	0	0						
		6:12	26.6	Non-Exposed	39	39	39	39	39	39	39	39	39	39	39	39	39	39	39	39	39	39	39	39	39	39	39	39	39	39	39	39	39	39	39	39	36	39	37	34	39	35	32			
				Exposed	39	39	39	39	39	39	39	39	39	39	39	39	39	39	39	39	39	39	39	39	39	39	39	39	39	39	36	39	34	0	39	32	0	39	0	0	37	0	0			
		7:12	30.3	Non-Exposed	41	41	41	41	41	41	41	41	41	41	41	41	41	41	41	41	41	41	41	41	41	41	41	41	41	41	41	41	41	40	40	40	39	39	39	38	38	37	38	38	35	
				Exposed	41	41	41	41	41	41	41	41	41	41	41	41	41	41	41	41	41	41	41	41	41	41	41	39	41	41	36	40	38	34	38	36	31	35	34	0	33	32	0			
		8:12	33.7	Non-Exposed	42	42	42	42	42	42	42	42	42	42	42	42	42	42	42	42	42	42	42	42	42	42	42	42	42	42	42	41	41	41	40	40	40	40	40	37	39	39	35			
				Exposed	42	42	42	42	42	42	42	42	42	42	42	42	42	42	42	42	42	42	42	42	42	42	42	39	42	41	36	41	38	34	38	36	31	35	33	0	33	32	0			
		9:12	36.9	Non-Exposed	44	44	44	44	44	44	44	44	44	44	44	44	44	44	44	44	44	44	44	44	44	44	44	44	44	44	43	43	43	43	43	43	42	42	40	41	41	37	40	40	35	
				Exposed	44	44	44	44	44	44	44	44	44	44	44	44	44	44	44	44	44	44	44	44	43	44	44	39	43	41	36	41	38	34	38	35	31	35	33	0	33	32	0			
		10:12	39.8	Non-Exposed	47	47	47	47	47	47	47	47	47	47	47	47	47	47	47	47	47	47	47	47	47	47	46	46	46	45	45	45	44	44	43	43	43	40	42	42	37	41	40	35			
				Exposed	47	47	47	47	47	47	47	47	47	47	47	47	47	47	47	47	47	47	47	45	47	47	43	46	45	39	44	41	36	41	38	34	38	35	31	35	33	0	33	32	0			
		11:12	42.5	Non-Exposed	49	49	49	49	49	49	49	49	49	49	49	49	49	49	49	49	49	49	49	49	49	48	48	48	47	47	46	46	46	43	45	45	40	44	42	37	43	40	35			
				Exposed	49	49	49	49	49	49	49	49	49	49	49	49	49	49	49	49	49	47	49	49	45	49	49	43	48	45	39	44	41	36	41	38	34	38	35	31	35	33	0	33	32	0			
		12:12	45	Non-Exposed	52	52	52	52	52	52	52	52	52	52	52	52	52	52	52	52	52	52	52	51	51	51	51	51	51	50	50	50	48	48	46	47	47	43	46	45	40	45	42	37	42	39	35
				Exposed	52	52	52	52	52	52	52	52	52	52	52	52	52	52	50	52	52	47	51	51	45	51	49	43	48	45	39	44	41	36	41	38	34	38	35	31	35	33	0	33	32	0

Tamarack 2.3 Rail – Gable Flush-Mount on 30 Foot Maximum Mean Roof Height – Portrait – Panel Length = 80 Inches or Less

Ground Snow Load	Exposure Category	Roof Pitch	Roof Angle	Wind Speed (mph)	95			100			105			110			115			120			125			130			140			150			160			170			180			190		
				Roof Area	1	2	3	1	2	3	1	2	3	1	2	3	1	2	3	1	2	3	1	2	3	1	2	3	1	2	3	1	2	3	1	2	3	1	2	3	1	2	3	1	2	3
60	B	Flat	0	Non-Exposed	42	42	42	42	42	42	42	42	42	42	42	42	42	42	42	42	42	42	42	42	42	42	42	42	42	42	42	42	42	42	42	42	42	42	42	42	42	42	42	42	42	41
				Exposed	42	42	42	42	42	42	42	42	42	42	42	42	42	42	42	42	42	42	42	42	42	42	42	42	42	42	42	42	42	42	42	42	40	42	42	37	42	42	34	42	39	33
		1:12	4.8	Non-Exposed	39	39	39	39	39	39	39	39	39	39	39	39	39	39	39	39	39	39	39	39	39	39	39	39	39	39	39	39	39	39	39	39	39	39	39	39	39	39	39	39	39	39
				Exposed	39	39	39	39	39	39	39	39	39	39	39	39	39	39	39	39	39	39	39	39	39	39	39	39	39	39	39	39	39	39	39	39	39	39	39	37	39	39	34	39	39	33
		2:12	9.5	Non-Exposed	37	37	37	37	37	37	37	37	37	37	37	37	37	37	37	37	37	37	37	37	37	37	37	37	37	37	37	37	37	37	37	37	37	37	37	37	37	37	37	37	37	37
				Exposed	37	37	37	37	37	37	37	37	37	37	37	37	37	37	37	37	37	37	37	37	37	37	37	37	37	37	37	37	37	37	37	37	37	37	37	34	37	36	32	37	34	0
		3:12	14.0	Non-Exposed	36	36	36	36	36	36	36	36	36	36	36	36	36	36	36	36	36	36	36	36	36	36	36	36	36	36	36	36	36	36	36	36	36	36	36	36	36	36	36	36	36	36
				Exposed	36	36	36	36	36	36	36	36	36	36	36	36	36	36	36	36	36	36	36	36	36	36	36	36	36	36	36	36	36	34	36	36	36	36	36	34	36	35	32	36	34	0
		4:12	18.4	Non-Exposed	36	36	36	36	36	36	36	36	36	36	36	36	36	36	36	36	36	36	36	36	36	36	36	36	36	36	36	36	36	36	36	36	36	36	36	36	36	36	36	36	36	36
				Exposed	36	36	36	36	36	36	36	36	36	36	36	36	36	36	36	36	36	36	36	36	36	36	36	36	36	36	36	36	36	34	36	36	36	36	36	34	36	35	32	36	34	0
		5:12	22.6	Non-Exposed	36	36	36	36	36	36	36	36	36	36	36	36	36	36	36	36	36	36	36	36	36	36	36	36	36	36	36	36	36	36	36	36	36	36	36	36	36	36	36	36	36	36
				Exposed	36	36	36	36	36	36	36	36	36	36	36	36	36	36	36	36	36	36	36	36	36	36	36	36	36	36	36	36	36	34	36	36	36	36	36	34	36	35	32	36	34	0
		6:12	26.6	Non-Exposed	38	38	38	38	38	38	38	38	38	38	38	38	38	38	38	38	38	38	38	38	38	38	38	38	38	38	38	38	38	38	38	38	38	38	38	38	38	38	38	38	38	38
				Exposed	38	38	38	38	38	38	38	38	38	38	38	38	38	38	38	38	38	38	38	38	38	38	38	38	38	38	38	38	38	36	38	37	34	38	35	31	38	33	0	38	0	0
		7:12	30.3	Non-Exposed	39	39	39	39	39	39	39	39	39	39	39	39	39	39	39	39	39	39	39	39	39	39	39	39	39	39	39	39	39	39	39	39	39	39	39	39	39	39	39	39	39	39
				Exposed	39	39	39	39	39	39	39	39	39	39	39	39	39	39	39	39	39	39	39	39	39	39	39	39	39	39	39	39	39	39	39	39	39	39	39	37	39	39	34	39	39	33
		8:12	33.7	Non-Exposed	41	41	41	41	41	41	41	41	41	41	41	41	41	41	41	41	41	41	41	41	41	41	41	41	41	41	41	41	41	41	41	41	41	41	41	41	41	41	41	41	41	41
				Exposed	41	41	41	41	41	41	41	41	41	41	41	41	41	41	41	41	41	41	41	41	41	41	41	41	41	41	41	41	41	41	41	41	41	41	41	41	41	41	39	41	41	37
		9:12	36.9	Non-Exposed	43	43	43	43	43	43	43	43	43	43	43	43	43	43	43	43	43	43	43	43	43	43	43	43	43	43	43	43	43	43	43	43	43	43	43	43	42	42	42	42	42	42
				Exposed	43	43	43	43	43	43	43	43	43	43	43	43	43	43	43	43	43	43	43	43	43	43	43	43	43	43	43	43	43	42	43	43	39	43	43	37	42	42	39	42	42	37
		10:12	39.8	Non-Exposed	45	45	45	45	45	45	45	45	45	45	45	45	45	45	45	45	45	45	45	45	45	45	45	45	45	45	45	45	45	45	45	45	45	45	45	45	44	44	44	44	44	44
				Exposed	45	45	45	45	45	45	45	45	45	45	45	45	45	45	45	45	45	45	45	45	45	45	45	45	45	45	45	45	45	45	45	45	45	45	45	42	44	44	37	44	44	37
		11:12	42.5	Non-Exposed	47	47	47	47	47	47	47	47	47	47	47	47	47	47	47	47	47	47	47	47	47	47	47	47	47	47	47	47	47	47	47	47	47	47	47	47	47	47	47	47	47	47
				Exposed	47	47	47	47	47	47	47	47	47	47	47	47	47	47	47	47	47	47	47	47	47	47	47	47	47	47	47	47	47	47	47	47	45	47	47	42	46	45	39	45	42	37
		12:12	45	Non-Exposed	50	50	50	50	50	50	50	50	50	50	50	50	50	50	50	50	50	50	50	50	50	50	50	50	50	50	50	50	50	50	50	50	50	49	49	49	48	48	48	47	47	47
				Exposed	50	50	50	50	50	50	50	50	50	50	50	50	50	50	50	50	50	50	50	50	50	50	50	50	50	50	50	50	49	50	50	45	45	49	48	42	48	45	39	45	42	37
	C	Flat	0	Non-Exposed	42	42	42	42	42	42	42	42	42	42	42	42	42	42	42	42	42	42	42	42	42	42	42	42	42	42	42	42	42	42	42	41	42	42	38	42	42	36	42	41	34
				Exposed	42	42	42	42	42	42	42	42	42	42	42	42	42	42	42	42	42	42	42	42	38	42	42	35	42	39	33	42	37	0	41	34	0	38	32	0						
		1:12	4.8	Non-Exposed	39	39	39	39	39	39	39	39	39	39	39	39	39	39	39	39	39	39	39	39	39	39	39	39	39	39	39	39	39	39	39	39	39	39	38	39	39	36	39	39	34
				Exposed	39	39	39	39	39	39	39	39	39	39	39	39	39	39	39	39	39	39	39	39	38	39	39	35	39	39	33	39	36	0	39	34	0	38	32	0						
		2:12	9.5	Non-Exposed	37	37	37	37	37	37	37	37	37	37	37	37	37	37	37	37	37	37	37	37	37	37	37	37	37	37	37	37	37	36	37	37	33	37	35	32						
				Exposed	37	37	37	37	37	37	37	37	37	37	37	37	37	37	37	37	37	37	37	37	35	37	36	33	37	34	0	37	32	0	37	0	0	35	0	0						
		3:12	14.0	Non-Exposed	36	36	36	36	36	36	36	36	36	36	36	36	36	36	36	36	36	36	36	36	36	36	36	36	36	36	36	36	36	35	36	36	33	36	35	32						
				Exposed	36	36	36	36	36	36	36	36	36	36	36	36	36	36	36	36	36	36	36	36	35	36	36	33	36	34	0	36	32	0	36	0	0	35	0	0						
		4:12	18.4	Non-Exposed	36	36	36	36	36	36	36	36	36	36	36	36	36	36	36	36	36	36	36	36	36	36	36	36	36	36	36	36	36	35	36	36	33	36	35	32						
				Exposed	36	36	36	36	36	36	36	36	36	36	36	36	36	36	36	36	36	36	36	36	35	36	36	33	36	34	0	36	32	0	36	0	0	35	0	0						
		5:12	22.6	Non-Exposed	36	36	36	36	36	36	36	36	36	36	36	36	36	36	36	36	36	36	36	36	36	36	36	36	36	36	36	36	36	36	36	36	36	36	36	35						
				Exposed	36	36	36	36	36	36	36	36	36	36	36	36	36	36	36	36	36	36	36	36	36	36	36	36	36	36	34	36	35	31	36	33	0	36	0	0						
		6:12	26.6	Non-Exposed	38	38	38	38	38	38	38	38	38	38	38	38	38	38	38	38	38	38	38	38	38	38	38	38	38	38	38	38	38	38	38	38	37	38	38	35						
				Exposed	38	38	38	38	38	38	38	38	38	38	38	38	38	38	38	38	38	38	38	38	38	38	38	38	38	37	34	38	35	31	38	33	0	38	0	0						
		7:12	30.3	Non-Exposed	39	39	39	39	39	39	39	39	39	39	39	39	39	39	39	39	39	39	39	39	39	39	39	39	39	39	39	39	39	39	39	39	38	38	38	38						
				Exposed	39	39	39	39	39	39	39	39	39	39	39	39	39	39	39	39	39	39	39	39	39	39	39	39	39	39	37	39	39	35	38	37	32	37	35	0						
		8:12	33.7	Non-Exposed	41	41	41	41	41	41	41	41	41	41	41	41	41	41	41	41	41	41	41	41	41	41	41	41	41	41	41	41	41	40	40	40	40	40	40	38						
				Exposed	41	41	41	41	41	41	41	41	41	41	41	41	41	41	41	41	41	41	41	41	41	41	41	41	41	40	41	41	37	40	39	35	39	37	32	37	35	0					
		9:12	36.9	Non-Exposed	43	43	43	43	43	43	43	43	43	43	43	43	43	43	43	43	43	43	43	43	43	43	43	43	43	43	43	43	42	42	42	42	42	42	41	41	40	40	38			
				Exposed	43	43	43	43	43	43	43	43	43	43	43	43	43	43	43	43	43	43	43	43	43	43	43	43	43	43	40	42	42	37	42	39	34	39	37	32	37	34	0			
		10:12	39.8	Non-Exposed	45	45	45	45	45	45	45	45	45	45	45	45	45	45	45	45	45	45	45	45	45	45	45	45	45	45	45	44	44	44	43	43	43	42	42	41	42	42	38			
				Exposed	45	45	45	45	45	45	45	45	45	45	45	45	45	45	45	45	45	45	45	45	45	45	45	43	45	45	40	44	42	37	42	39	34	39	37	32	37	34	0			
		11:12	42.5	Non-Exposed	47	47	47	47	47	47	47	47	47	47	47	47	47	47	47	47	47	47	47	47	47	47	47	47	47	47	47	46	46	46	45	45	44	44	44	41	43	43	38			
				Exposed	47	47	47	47	47	47	47	47	47	47	47	47	47	47	47	47	47	47	47	47	47	47	47	43	47	46	40	45	42	37	42	39	34	39	37	32	37	34	0			
		12:12	45	Non-Exposed	50	50	50	50	50	50	50	50	50	50	50	50	50	50	50	50	50	50	50	50	50	50	50	49	49	49	48	48	48	47	47	47	47	47	44	46	46	41	45	44	38	
				Exposed	50	50	50	50	50	50	50	50	50	50	50	50	50	50	50	50	50	50	50	50	50	50	50	49	49	43	48	46	40	45	42	37	42	39	34	39	37	32	37	34	0	
	D	Flat	0	Non-Exposed	42	42	42	42	42	42	42	42	42	42	42	42	42	42	42	42	42	42	42	42	42	42	42	42	42	42	42	42	40	42	42	37	42	42	35	42	39	33	42	37	0
				Exposed	42	42	42	42	42	42	42	42	42	42	42	42	42	42	42	42	42	41	42	42	39	42	42	37	42	42	34	42	38	32	42	36	0	40	33	0	37	31	0	35	0	0
		1:12	4.8	Non-Exposed	39	39	39	39	39	39	39	39	39	39	39	39	39	39	39	39	39	39	39	39	39	39	39	39	39	39	39	39	39	39	39	37	39	39	35	39	39	33	39	37	0
				Exposed	39	39	39	39	39	39	39	39	39	39	39	39	39	39	39	39	39	39	39	39	39	39	39	37	39	39	34	39	38	32	39	35	0	39	33	0	37	31	0	35	0	0
		2:12	9.5	Non-Exposed	37	37	37	37	37	37	37	37	37	37	37	37	37	37	37	37	37	37	37	37	37	37	37	37	37	37	37	37	37	37	37	35	37	36	33	37	34	0	37	32	0
				Exposed	37	37	37	37	37	37	37	37	37	37	37	37	37	37	37	37	37	37	37	37	35	37	35	32	37	33	0	37	0	0	36	0	0	34	0	0	32	0	0			
		3:12	14.0	Non-Exposed	36	36	36	36	36	36	36	36	36	36	36	36	36	36	36	36	36	36	36	36	36	36	36	36	36	36	36	36	36	35	36	36	33	36	34	0	36	32	0			
				Exposed	36	36	36	36	36	36	36	36	36	36	36	36	36	36	36	36	36	36	36	36	35	36	35	32	36	33	0	36	0	0	36	0	0	34	0	0	32	0	0			
		4:12	18.4	Non-Exposed	36	36	36	36	36	36	36	36	36	36	36	36	36	36	36	36	36	36	36	36	36	36	36	36	36	36	36	36	36	35	36	36	32	36	34	0	36	32	0			
				Exposed	36	36	36	36	36	36	36	36	36	36	36	36	36	36	36	36	36	36	36	36	35	36	35	32	36	33	0	36	0	0	36	0	0	34	0	0	32	0	0			
		5:12	22.6	Non-Exposed	36	36	36	36	36	36	36	36	36	36	36	36	36	36	36	36	36	36	36	36	36	36	36	36	36	36	36	36	36	36	36	36	34	36	36	32						
				Exposed	36	36	36	36	36	36	36	36	36	36	36	36	36	36	36	36	36	36	36	36	36	36	36	36	36	36	33	36	34	31	36	32	0	36	0	0	36	0	0			
		6:12	26.6	Non-Exposed	38	38	38	38	38	38	38	38	38	38	38	38	38	38	38	38	38	38	38	38	38	38	38	38	38	38	38	38	38	38	38	38	37	34	38	35						
				Exposed	38	38	38	38	38	38	38	38	38	38	38	38	38	38	38	38	38	38	38	38	38	38	38	36	38	36	33	38	34	0	38	32	0	38	0	0	37	0	0			
		7:12	30.3	Non-Exposed	39	39	39	39	39	39	39	39	39	39	39	39	39	39	39	39	39	39	39	39	39	39	39	39	39	39	39	39	39	39	38	38	38	37	37	37	37	37	35			
				Exposed	39	39	39	39	39	39	39	39	39	39	39	39	39	39	39	39	39	39	39	39	39	39	39	39	39	39	36	39	38	34	38	36	31	35	34	0	33	32	0			
		8:12	33.7	Non-Exposed	41	41	41	41	41	41	41	41	41	41	41	41	41	41	41	41	41	41	41	41	41	41	41	41	41	41	41	40	40	40	39	39	39	39	39	37	38	38	35			
				Exposed	41	41	41	41	41	41	41	41	41	41	41	41	41	41	41	41	41	41	41	41	39	41	41	36	40	38	34	38	36	31	35	33	0	33	32	0						
		9:12	36.9	Non-Exposed	43	43	43	43	43	43	43	43	43	43	43	43	43	43	43	43	43	43	43	43	43	43	43	43	42	42	42	41	41	41	41	41	40	40	40	37	39	39	35			
				Exposed	43	43	43	43	43	43	43	43	43	43	43	43	43	43	43	43	43	43	43	43	39	42	41	36	41	38	34	38	35	31	35	33	0	33	32	0						
		10:12	39.8	Non-Exposed	45	45	45	45	45	45	45	45	45	45	45	45	45	45	45	45	45	45	45	45	45	44	44	44	43	43	43	42	42	40	41	41	37	40	40	35						
				Exposed	45	45	45	45	45	45	45	45	45	45	45	45	45	45	45	45	45	45	45	45	39	44	41	36	41	38	34	38	35	31	35	33	0	33	32	0						
		11:12	42.5	Non-Exposed	47	47	47	47	47	47	47	47	47	47	47	47	47	47	47	47	47	47	47	47	47	46	46	46	45	45	45	44	44	43	43	43	40	43	42	37	42	40	35			
				Exposed	47	47	47	47	47	47	47	47	47	47	47	47	47	47	47	47	47	47	47	45	47	47	43	46	45	39	44	41	36	41	38	34	38	35	31	35	33	0	33	32	0			
		12:12	45	Non-Exposed	50	50	50	50	50	50	50	50	50	50	50	50	50	50	50	50	50	50	50	50	49	49	49	48	48	48	47	47	46	46	46	43	45	45	40	44	42	37	42	39	35	
				Exposed	50	50	50	50	50	50	50	50	50	50	50	50	50	50	50	50	50	47	50	50	45	49	49	43	48	45	39	44	41	36	41	38	34	38	35	31	35	33	0	33	32	0

Tamarack 2.3 Rail – Gable Flush-Mount on 30 Foot Maximum Mean Roof Height – Portrait – Panel Length = 80 Inches or Less

Ground Snow Load	Exposure Category	Roof Pitch	Roof Angle	Wind Speed (mph)	95			100			105			110			115			120			125			130			140			150			160			170			180			190		
				Roof Area	1	2	3	1	2	3	1	2	3	1	2	3	1	2	3	1	2	3	1	2	3	1	2	3	1	2	3	1	2	3	1	2	3	1	2	3	1	2	3	1	2	3
70	B	Flat	0	Non-Exposed	39	39	39	39	39	39	39	39	39	39	39	39	39	39	39	39	39	39	39	39	39	39	39	39	39	39	39	39	39	39	39	39	39	39	39	39	39	39	39	39	39	39
				Exposed	39	39	39	39	39	39	39	39	39	39	39	39	39	39	39	39	39	39	39	39	39	39	39	39	39	39	39	39	39	39	39	39	39	39	39	37	39	39	34	39	39	33
		1:12	4.8	Non-Exposed	36	36	36	36	36	36	36	36	36	36	36	36	36	36	36	36	36	36	36	36	36	36	36	36	36	36	36	36	36	36	36	36	36	36	36	36	36	36	36	36	36	36
				Exposed	36	36	36	36	36	36	36	36	36	36	36	36	36	36	36	36	36	36	36	36	36	36	36	36	36	36	36	36	36	36	36	36	36	36	36	36	36	36	34	36	36	33
		2:12	9.5	Non-Exposed	34	34	34	34	34	34	34	34	34	34	34	34	34	34	34	34	34	34	34	34	34	34	34	34	34	34	34	34	34	34	34	34	34	34	34	34	34	34	34	34	34	34
				Exposed	34	34	34	34	34	34	34	34	34	34	34	34	34	34	34	34	34	34	34	34	34	34	34	34	34	34	34	34	34	34	34	34	34	34	34	34	34	34	32	34	34	0
		3:12	14.0	Non-Exposed	33	33	33	33	33	33	33	33	33	33	33	33	33	33	33	33	33	33	33	33	33	33	33	33	33	33	33	33	33	33	33	33	33	33	33	33	33	33	33	33	33	33
				Exposed	33	33	33	33	33	33	33	33	33	33	33	33	33	33	33	33	33	33	33	33	33	33	33	33	33	33	33	33	33	33	33	33	33	33	33	33	33	33	32	33	33	0
		4:12	18.4	Non-Exposed	33	33	33	33	33	33	33	33	33	33	33	33	33	33	33	33	33	33	33	33	33	33	33	33	33	33	33	33	33	33	33	33	33	33	33	33	33	33	33	33	33	33
				Exposed	33	33	33	33	33	33	33	33	33	33	33	33	33	33	33	33	33	33	33	33	33	33	33	33	33	33	33	33	33	33	33	33	33	33	33	33	33	33	32	33	33	0
		5:12	22.6	Non-Exposed	34	34	34	34	34	34	34	34	34	34	34	34	34	34	34	34	34	34	34	34	34	34	34	34	34	34	34	34	34	34	34	34	34	34	34	34	34	34	34	34	34	34
				Exposed	34	34	34	34	34	34	34	34	34	34	34	34	34	34	34	34	34	34	34	34	34	34	34	34	34	34	34	34	34	34	34	34	34	34	34	34	34	34	34	34	34	34
		6:12	26.6	Non-Exposed	35	35	35	35	35	35	35	35	35	35	35	35	35	35	35	35	35	35	35	35	35	35	35	35	35	35	35	35	35	35	35	35	35	35	35	35	35	35	35	35	35	35
				Exposed	35	35	35	35	35	35	35	35	35	35	35	35	35	35	35	35	35	35	35	35	35	35	35	35	35	35	35	35	35	35	35	35	35	35	35	35	35	35	35	35	35	34
		7:12	30.3	Non-Exposed	36	36	36	36	36	36	36	36	36	36	36	36	36	36	36	36	36	36	36	36	36	36	36	36	36	36	36	36	36	36	36	36	36	36	36	36	36	36	36	36	36	36
				Exposed	36	36	36	36	36	36	36	36	36	36	36	36	36	36	36	36	36	36	36	36	36	36	36	36	36	36	36	36	36	36	36	36	36	36	36	36	36	36	36	36	36	36
		8:12	33.7	Non-Exposed	38	38	38	38	38	38	38	38	38	38	38	38	38	38	38	38	38	38	38	38	38	38	38	38	38	38	38	38	38	38	38	38	38	38	38	38	38	38	38	38	38	38
				Exposed	38	38	38	38	38	38	38	38	38	38	38	38	38	38	38	38	38	38	38	38	38	38	38	38	38	38	38	38	38	38	38	38	38	38	38	38	38	38	37	38	38	37
		9:12	36.9	Non-Exposed	40	40	40	40	40	40	40	40	40	40	40	40	40	40	40	40	40	40	40	40	40	40	40	40	40	40	40	40	40	40	40	40	40	40	40	40	40	40	40	40	40	40
				Exposed	40	40	40	40	40	40	40	40	40	40	40	40	40	40	40	40	40	40	40	40	40	40	40	40	40	40	40	40	40	40	40	40	40	40	40	40	40	40	39	40	40	37
		10:12	39.8	Non-Exposed	42	42	42	42	42	42	42	42	42	42	42	42	42	42	42	42	42	42	42	42	42	42	42	42	42	42	42	42	42	42	42	42	42	42	42	42	42	42	42	42	42	42
				Exposed	42	42	42	42	42	42	42	42	42	42	42	42	42	42	42	42	42	42	42	42	42	42	42	42	42	42	42	42	42	42	42	42	42	42	42	42	42	42	39	42	42	37
		11:12	42.5	Non-Exposed	44	44	44	44	44	44	44	44	44	44	44	44	44	44	44	44	44	44	44	44	44	44	44	44	44	44	44	44	44	44	44	44	44	44	44	44	43	43	43	43	43	43
				Exposed	44	44	44	44	44	44	44	44	44	44	44	44	44	44	44	44	44	44	44	44	44	44	44	44	44	44	44	44	44	44	44	44	44	44	44	44	43	43	37	43	43	37
		12:12	45	Non-Exposed	47	47	47	47	47	47	47	47	47	47	47	47	47	47	47	47	47	47	47	47	47	47	47	47	47	47	47	47	47	47	47	47	47	47	47	47	46	46	45	45	45	45
				Exposed	47	47	47	47	47	47	47	47	47	47	47	47	47	47	47	47	47	47	47	47	47	47	47	47	47	47	47	47	47	47	47	47	47	47	47	42	46	45	39	45	42	37
	C	Flat	0	Non-Exposed	39	39	39	39	39	39	39	39	39	39	39	39	39	39	39	39	39	39	39	39	39	39	39	39	39	39	39	39	39	39	39	39	39	39	39	38	39	39	36	39	39	34
				Exposed	39	39	39	39	39	39	39	39	39	39	39	39	39	39	39	39	39	39	39	39	39	39	39	39	39	39	38	39	39	35	39	39	33	39	37	0	39	34	0	38	32	0
		1:12	4.8	Non-Exposed	36	36	36	36	36	36	36	36	36	36	36	36	36	36	36	36	36	36	36	36	36	36	36	36	36	36	36	36	36	36	36	36	36	36	36	36	36	36	36	36	36	34
				Exposed	36	36	36	36	36	36	36	36	36	36	36	36	36	36	36	36	36	36	36	36	36	36	36	36	36	36	35	36	36	33	36	36	0	36	34	0	36	32	0			
		2:12	9.5	Non-Exposed	34	34	34	34	34	34	34	34	34	34	34	34	34	34	34	34	34	34	34	34	34	34	34	34	34	34	34	34	34	34	34	34	34	34	34	34	34	34	33	34	34	32
				Exposed	34	34	34	34	34	34	34	34	34	34	34	34	34	34	34	34	34	34	34	34	34	34	34	34	34	34	34	34	34	33	34	34	0	34	32	0	34	0	0	34	0	0
		3:12	14.0	Non-Exposed	33	33	33	33	33	33	33	33	33	33	33	33	33	33	33	33	33	33	33	33	33	33	33	33	33	33	33	33	33	33	33	33	33	33	33	33	33	33	33	33	33	32
				Exposed	33	33	33	33	33	33	33	33	33	33	33	33	33	33	33	33	33	33	33	33	33	33	33	33	33	33	33	33	33	0	33	32	0	33	0	0	33	0	0			
		4:12	18.4	Non-Exposed	33	33	33	33	33	33	33	33	33	33	33	33	33	33	33	33	33	33	33	33	33	33	33	33	33	33	33	33	33	33	33	33	33	33	33	33	33	33	33	33	33	32
				Exposed	33	33	33	33	33	33	33	33	33	33	33	33	33	33	33	33	33	33	33	33	33	33	33	33	33	33	33	33	33	0	33	32	0	33	0	0	33	0	0			
		5:12	22.6	Non-Exposed	34	34	34	34	34	34	34	34	34	34	34	34	34	34	34	34	34	34	34	34	34	34	34	34	34	34	34	34	34	34	34	34	34	34	34	34	34	34	34	34	34	34
				Exposed	34	34	34	34	34	34	34	34	34	34	34	34	34	34	34	34	34	34	34	34	34	34	34	34	34	34	34	34	34	34	34	34	31	34	33	0	34	0	0			
70	C	6:12	26.6	Non-Exposed	35	35	35	35	35	35	35	35	35	35	35	35	35	35	35	35	35	35	35	35	35	35	35	35	35	35	35	35	35	35	35	35	35	35	35	35	35	35	35	35	35	35
				Exposed	35	35	35	35	35	35	35	35	35	35	35	35	35	35	35	35	35	35	35	35	35	35	35	35	35	35	35	35	35	34	35	35	31	35	33	0	35	0	0			
		7:12	30.3	Non-Exposed	36	36	36	36	36	36	36	36	36	36	36	36	36	36	36	36	36	36	36	36	36	36	36	36	36	36	36	36	36	36	36	36	36	36	36	36	36	36	36	36	36	36
				Exposed	36	36	36	36	36	36	36	36	36	36	36	36	36	36	36	36	36	36	36	36	36	36	36	36	36	36	36	36	36	36	36	36	35	36	36	32	36	35	0			
		8:12	33.7	Non-Exposed	38	38	38	38	38	38	38	38	38	38	38	38	38	38	38	38	38	38	38	38	38	38	38	38	38	38	38	38	38	38	38	38	38	38	37	37	37	37	37	37	37	37
				Exposed	38	38	38	38	38	38	38	38	38	38	38	38	38	38	38	38	38	38	38	38	38	38	38	38	38	38	38	38	38	37	38	38	35	37	37	32	37	35	0			
		9:12	36.9	Non-Exposed	40	40	40	40	40	40	40	40	40	40	40	40	40	40	40	40	40	40	40	40	40	40	40	40	40	40	40	40	40	40	40	40	39	39	39	39	39	39	38	38	38	38
				Exposed	40	40	40	40	40	40	40	40	40	40	40	40	40	40	40	40	40	40	40	40	40	40	40	40	40	40	40	40	40	37	39	39	34	39	37	32	37	34	0			
		10:12	39.8	Non-Exposed	42	42	42	42	42	42	42	42	42	42	42	42	42	42	42	42	42	42	42	42	42	42	42	42	42	42	42	42	42	41	41	41	40	40	40	40	40	40	38			
				Exposed	42	42	42	42	42	42	42	42	42	42	42	42	42	42	42	42	42	42	42	42	42	42	42	42	42	42	42	40	42	42	37	41	39	34	39	37	32	37	34	0			
		11:12	42.5	Non-Exposed	44	44	44	44	44	44	44	44	44	44	44	44	44	44	44	44	44	44	44	44	44	44	44	44	44	44	44	44	43	43	43	43	43	43	43	42	42	41	41	38		
				Exposed	44	44	44	44	44	44	44	44	44	44	44	44	44	44	44	44	44	44	44	44	44	44	44	44	44	43	44	44	40	43	42	37	42	39	34	39	37	32	37	34	0		
		12:12	45	Non-Exposed	47	47	47	47	47	47	47	47	47	47	47	47	47	47	47	47	47	47	47	47	47	47	47	47	47	47	46	46	46	45	45	45	44	44	44	43	43	41	43	43	38	
				Exposed	47	47	47	47	47	47	47	47	47	47	47	47	47	47	47	47	47	47	47	47	47	47	47	47	47	49	43	46	46	40	45	42	37	42	39	34	39	37	32	37	34	0
	D	Flat	0	Non-Exposed	39	39	39	39	39	39	39	39	39	39	39	39	39	39	39	39	39	39	39	39	39	39	39	39	39	39	39	39	39	39	39	37	39	39	35	39	39	33	39	37	0	
				Exposed	39	39	39	39	39	39	39	39	39	39	39	39	39	39	39	39	39	39	39	39	39	39	39	37	39	39	34	39	38	32	39	36	0	39	33	0	37	31	0	35	0	0
		1:12	4.8	Non-Exposed	36	36	36	36	36	36	36	36	36	36	36	36	36	36	36	36	36	36	36	36	36	36	36	36	36	36	36	36	36	36	36	36	36	36	35	36	36	33	36	36	0	
				Exposed	36	36	36	36	36	36	36	36	36	36	36	36	36	36	36	36	36	36	36	36	36	36	36	36	36	36	34	36	36	32	36	35	0	36	33	0	36	31	0	35	0	0
		2:12	9.5	Non-Exposed	34	34	34	34	34	34	34	34	34	34	34	34	34	34	34	34	34	34	34	34	34	34	34	34	34	34	34	34	34	34	34	34	34	34	33	34	34	0	34	32	0	
				Exposed	34	34	34	34	34	34	34	34	34	34	34	34	34	34	34	34	34	34	34	34	34	34	34	34	34	34	32	34	33	0	34	0	0	34	0	0	32	0	0			
		3:12	14.0	Non-Exposed	33	33	33	33	33	33	33	33	33	33	33	33	33	33	33	33	33	33	33	33	33	33	33	33	33	33	33	33	33	33	33	33	33	33	33	33	33	0	33	32	0	
				Exposed	33	33	33	33	33	33	33	33	33	33	33	33	33	33	33	33	33	33	33	33	33	33	33	33	33	32	33	33	0	33	0	0	33	0	0	33	0	0				
		4:12	18.4	Non-Exposed	33	33	33	33	33	33	33	33	33	33	33	33	33	33	33	33	33	33	33	33	33	33	33	33	33	33	33	33	33	33	33	33	33	33	32	33	33	0	33	32	0	
				Exposed	33	33	33	33	33	33	33	33	33	33	33	33	33	33	33	33	33	33	33	33	33	33	33	32	33	33	0	33	0	0	33	0	0	33	0	0	32	0	0			
		5:12	22.6	Non-Exposed	34	34	34	34	34	34	34	34	34	34	34	34	34	34	34	34	34	34	34	34	34	34	34	34	34	34	34	34	34	34	34	34	34	34	34	34	34	34	34	34	32	
				Exposed	34	34	34	34	34	34	34	34	34	34	34	34	34	34	34	34	34	34	34	34	34	34	34	34	34	34	34	34	33	34	34	31	34	32	0	34	0	0	34	0	0	
		6:12	26.6	Non-Exposed	35	35	35	35	35	35	35	35	35	35	35	35	35	35	35	35	35	35	35	35	35	35	35	35	35	35	35	35	35	35	35	35	35	35	35	35	34	35	35	32		
				Exposed	35	35	35	35	35	35	35	35	35	35	35	35	35	35	35	35	35	35	35	35	35	35	35	35	35	35	35	35	33	35	34	0	35	32	0	35	0	0	35	0	0	
		7:12	30.3	Non-Exposed	36	36	36	36	36	36	36	36	36	36	36	36	36	36	36	36	36	36	36	36	36	36	36	36	36	36	36	36	36	36	36	36	36	36	36	35	35	35	35	35	35	
				Exposed	36	36	36	36	36	36	36	36	36	36	36	36	36	36	36	36	36	36	36	36	36	36	36	36	36	36	36	36	34	36	36	31	35	34	0	33	32	0				
		8:12	33.7	Non-Exposed	38	38	38	38	38	38	38	38	38	38	38	38	38	38	38	38	38	38	38	38	38	38	38	38	38	38	38	38	38	37	37	37	37	37	37	36	36	35				
				Exposed	38	38	38	38	38	38	38	38	38	38	38	38	38	38	38	38	38	38	38	38	38	38	38	38	38	38	38	36	38	38	34	37	36	31	35	33	0	33	32	0			
		9:12	36.9	Non-Exposed	40	40	40	40	40	40	40	40	40	40	40	40	40	40	40	40	40	40	40	40	40	40	40	40	40	40	40	40	39	39	39	39	39	39	38	38	37	37	35			
				Exposed	40	40	40	40	40	40	40	40	40	40	40	40	40	40	40	40	40	40	40	40	40	40	40	40	40	39	40	40	36	39	38	34	38	35	31	35	33	0	33	32	0		
		10:12	39.8	Non-Exposed	42	42	42	42	42	42	42	42	42	42	42	42	42	42	42	42	42	42	42	42	42	42	42	42	42	42	41	41	41	41	41	41	40	40	40	39	39	37	38	38	35	
				Exposed	42	42	42	42	42	42	42	42	42	42	42	42	42	42	42	42	42	42	42	42	42	42	42	42	42	39	41	41	36	41	38	34	38	35	31	35	33	0	33	32	0	
		11:12	42.5	Non-Exposed	44	44	44	44	44	44	44	44	44	44	44	44	44	44	44	44	44	44	44	44	44	44	44	44	44	44	43	43	43	42	42	42	41	41	40	41	41	37	40	40	35	
				Exposed	44	44	44	44	44	44	44	44	44	44	44	44	44	44	44	44	44	44	44	44	44	44	44	44	44	39	43	41	36	41	38	34	38	35	31	35	33	0	33	32	0	
		12:12	45	Non-Exposed	47	47	47	47	47	47	47	47	47	47	47	47	47	47	47	47	47	47	47	47	47	47	47	47	47	46	46	46	45	45	45	44	44	43	43	43	40	42	42	37	41	39	35
				Exposed	47	47	47	47	47	47	47	47	47	47	47	47	47	47	47	47	47	47	47	47	45	47	47	43	46	45	39	44	41	36	41	38	34	38	35	31	35	33	0	33	32	0

Tamarack 2.3 Rail – Gable Flush-Mount on 30 Foot Maximum Mean Roof Height – Portrait – Panel Length = 80 Inches or Less

Ground Snow Load	Exposure Category	Roof Pitch	Roof Angle	Wind Speed (mph)	95			100			105			110			115			120			125			130			140			150			160			170			180			190		
				Roof Area	1	2	3	1	2	3	1	2	3	1	2	3	1	2	3	1	2	3	1	2	3	1	2	3	1	2	3	1	2	3	1	2	3	1	2	3	1	2	3	1	2	3
80	B	Flat	0	Non-Exposed	37	37	37	37	37	37	37	37	37	37	37	37	37	37	37	37	37	37	37	37	37	37	37	37	37	37	37	37	37	37	37	37	37	37	37	37	37	37	37	37	37	37
				Exposed	37	37	37	37	37	37	37	37	37	37	37	37	37	37	37	37	37	37	37	37	37	37	37	37	37	37	37	37	37	37	37	37	37	37	37	37	37	37	34	37	37	33
		1:12	4.8	Non-Exposed	34	34	34	34	34	34	34	34	34	34	34	34	34	34	34	34	34	34	34	34	34	34	34	34	34	34	34	34	34	34	34	34	34	34	34	34	34	34	34	34	34	34
				Exposed	34	34	34	34	34	34	34	34	34	34	34	34	34	34	34	34	34	34	34	34	34	34	34	34	34	34	34	34	34	34	34	34	34	34	34	34	34	34	34	34	34	33
		2:12	9.5	Non-Exposed	32	32	32	32	32	32	32	32	32	32	32	32	32	32	32	32	32	32	32	32	32	32	32	32	32	32	32	32	32	32	32	32	32	32	32	32	32	32	32	32	32	32
				Exposed	32	32	32	32	32	32	32	32	32	32	32	32	32	32	32	32	32	32	32	32	32	32	32	32	32	32	32	32	32	32	32	32	32	32	32	32	32	32	32	32	32	0
		3:12	14.0	Non-Exposed	31	31	31	31	31	31	31	31	31	31	31	31	31	31	31	31	31	31	31	31	31	31	31	31	31	31	31	31	31	31	31	31	31	31	31	31	31	31	31	31	31	31
				Exposed	31	31	31	31	31	31	31	31	31	31	31	31	31	31	31	31	31	31	31	31	31	31	31	31	31	31	31	31	31	31	31	31	31	31	31	31	31	31	31	31	31	0
		4:12	18.4	Non-Exposed	31	31	31	31	31	31	31	31	31	31	31	31	31	31	31	31	31	31	31	31	31	31	31	31	31	31	31	31	31	31	31	31	31	31	31	31	31	31	31	31	31	31
				Exposed	31	31	31	31	31	31	31	31	31	31	31	31	31	31	31	31	31	31	31	31	31	31	31	31	31	31	31	31	31	31	31	31	31	31	31	31	31	31	31	31	31	0
		5:12	22.6	Non-Exposed	32	32	32	32	32	32	32	32	32	32	32	32	32	32	32	32	32	32	32	32	32	32	32	32	32	32	32	32	32	32	32	32	32	32	32	32	32	32	32	32	32	32
				Exposed	32	32	32	32	32	32	32	32	32	32	32	32	32	32	32	32	32	32	32	32	32	32	32	32	32	32	32	32	32	32	32	32	32	32	32	32	32	32	32	32	32	32
		6:12	26.6	Non-Exposed	33	33	33	33	33	33	33	33	33	33	33	33	33	33	33	33	33	33	33	33	33	33	33	33	33	33	33	33	33	33	33	33	33	33	33	33	33	33	33	33	33	33
				Exposed	33	33	33	33	33	33	33	33	33	33	33	33	33	33	33	33	33	33	33	33	33	33	33	33	33	33	33	33	33	33	33	33	33	33	33	33	33	33	33	33	33	33
		7:12	30.3	Non-Exposed	34	34	34	34	34	34	34	34	34	34	34	34	34	34	34	34	34	34	34	34	34	34	34	34	34	34	34	34	34	34	34	34	34	34	34	34	34	34	34	34	34	34
				Exposed	34	34	34	34	34	34	34	34	34	34	34	34	34	34	34	34	34	34	34	34	34	34	34	34	34	34	34	34	34	34	34	34	34	34	34	34	34	34	34	34	34	34
		8:12	33.7	Non-Exposed	35	35	35	35	35	35	35	35	35	35	35	35	35	35	35	35	35	35	35	35	35	35	35	35	35	35	35	35	35	35	35	35	35	35	35	35	35	35	35	35	35	35
				Exposed	35	35	35	35	35	35	35	35	35	35	35	35	35	35	35	35	35	35	35	35	35	35	35	35	35	35	35	35	35	35	35	35	35	35	35	35	35	35	35	35	35	35
		9:12	36.9	Non-Exposed	37	37	37	37	37	37	37	37	37	37	37	37	37	37	37	37	37	37	37	37	37	37	37	37	37	37	37	37	37	37	37	37	37	37	37	37	37	37	37	37	37	37
				Exposed	37	37	37	37	37	37	37	37	37	37	37	37	37	37	37	37	37	37	37	37	37	37	37	37	37	37	37	37	37	37	37	37	37	37	37	37	37	37	37	37	37	37
		10:12	39.8	Non-Exposed	39	39	39	39	39	39	39	39	39	39	39	39	39	39	39	39	39	39	39	39	39	39	39	39	39	39	39	39	39	39	39	39	39	39	39	39	39	39	39	39	39	39
				Exposed	39	39	39	39	39	39	39	39	39	39	39	39	39	39	39	39	39	39	39	39	39	39	39	39	39	39	39	39	39	39	39	39	39	39	39	39	39	39	39	39	39	37
		11:12	42.5	Non-Exposed	41	41	41	41	41	41	41	41	41	41	41	41	41	41	41	41	41	41	41	41	41	41	41	41	41	41	41	41	41	41	41	41	41	41	41	41	41	41	41	41	41	41
				Exposed	41	41	41	41	41	41	41	41	41	41	41	41	41	41	41	41	41	41	41	41	41	41	41	41	41	41	41	41	41	41	41	41	41	41	41	41	41	41	39	41	41	37
		12:12	45	Non-Exposed	44	44	44	44	44	44	44	44	44	44	44	44	44	44	44	44	44	44	44	44	44	44	44	44	44	44	44	44	44	44	44	44	44	44	44	44	44	44	44	43	43	43
				Exposed	44	44	44	44	44	44	44	44	44	44	44	44	44	44	44	44	44	44	44	44	44	44	44	44	44	44	44	44	44	44	44	44	44	44	44	42	44	44	39	43	42	37
	C	Flat	0	Non-Exposed	37	37	37	37	37	37	37	37	37	37	37	37	37	37	37	37	37	37	37	37	37	37	37	37	37	37	37	37	37	37	37	37	37	37	37	37	37	37	36	37	37	34
				Exposed	37	37	37	37	37	37	37	37	37	37	37	37	37	37	37	37	37	37	37	37	37	37	37	37	37	37	37	37	37	35	37	37	33	37	37	0	37	34	0	37	32	0
		1:12	4.8	Non-Exposed	34	34	34	34	34	34	34	34	34	34	34	34	34	34	34	34	34	34	34	34	34	34	34	34	34	34	34	34	34	34	34	34	34	34	34	34	34	34	34	34	34	34
				Exposed	34	34	34	34	34	34	34	34	34	34	34	34	34	34	34	34	34	34	34	34	34	34	34	34	34	34	34	34	34	34	34	34	33	34	34	0	34	34	0	34	32	0
		2:12	9.5	Non-Exposed	32	32	32	32	32	32	32	32	32	32	32	32	32	32	32	32	32	32	32	32	32	32	32	32	32	32	32	32	32	32	32	32	32	32	32	32	32	32	32	32	32	32
				Exposed	32	32	32	32	32	32	32	32	32	32	32	32	32	32	32	32	32	32	32	32	32	32	32	32	32	32	32	32	32	32	32	32	0	32	32	0	32	0	0	32	0	0
		3:12	14.0	Non-Exposed	31	31	31	31	31	31	31	31	31	31	31	31	31	31	31	31	31	31	31	31	31	31	31	31	31	31	31	31	31	31	31	31	31	31	31	31	31	31	31	31	31	31
				Exposed	31	31	31	31	31	31	31	31	31	31	31	31	31	31	31	31	31	31	31	31	31	31	31	31	31	31	31	31	31	31	31	31	0	31	31	0	31	0	0	31	0	0
		4:12	18.4	Non-Exposed	31	31	31	31	31	31	31	31	31	31	31	31	31	31	31	31	31	31	31	31	31	31	31	31	31	31	31	31	31	31	31	31	31	31	31	31	31	31	31	31	31	31
				Exposed	31	31	31	31	31	31	31	31	31	31	31	31	31	31	31	31	31	31	31	31	31	31	31	31	31	31	31	31	31	31	31	31	0	31	31	0	31	0	0	31	0	0
		5:12	22.6	Non-Exposed	32	32	32	32	32	32	32	32	32	32	32	32	32	32	32	32	32	32	32	32	32	32	32	32	32	32	32	32	32	32	32	32	32	32	32	32	32	32	32	32	32	32
				Exposed	32	32	32	32	32	32	32	32	32	32	32	32	32	32	32	32	32	32	32	32	32	32	32	32	32	32	32	32	32	32	32	32	31	32	32	0	32	0	0	32	0	0
		6:12	26.6	Non-Exposed	33	33	33	33	33	33	33	33	33	33	33	33	33	33	33	33	33	33	33	33	33	33	33	33	33	33	33	33	33	33	33	33	33	33	33	33	33	33	33	33	33	33
				Exposed	33	33	33	33	33	33	33	33	33	33	33	33	33	33	33	33	33	33	33	33	33	33	33	33	33	33	33	33	33	33	33	33	31	33	33	0	33	0	0	33	0	0
		7:12	30.3	Non-Exposed	34	34	34	34	34	34	34	34	34	34	34	34	34	34	34	34	34	34	34	34	34	34	34	34	34	34	34	34	34	34	34	34	34	34	34	34	34	34	34	34	34	34
				Exposed	34	34	34	34	34	34	34	34	34	34	34	34	34	34	34	34	34	34	34	34	34	34	34	34	34	34	34	34	34	34	34	34	34	34	34	34	34	34	32	34	34	0
		8:12	33.7	Non-Exposed	35	35	35	35	35	35	35	35	35	35	35	35	35	35	35	35	35	35	35	35	35	35	35	35	35	35	35	35	35	35	35	35	35	35	35	35	35	35	35	35	35	35
				Exposed	35	35	35	35	35	35	35	35	35	35	35	35	35	35	35	35	35	35	35	35	35	35	35	35	35	35	35	35	35	35	35	35	35	35	35	35	35	35	32	35	35	0
		9:12	36.9	Non-Exposed	37	37	37	37	37	37	37	37	37	37	37	37	37	37	37	37	37	37	37	37	37	37	37	37	37	37	37	37	37	37	37	37	37	37	37	37	37	37	37	36	36	36
				Exposed	37	37	37	37	37	37	37	37	37	37	37	37	37	37	37	37	37	37	37	37	37	37	37	37	37	37	37	37	37	37	37	37	34	37	37	32	36	34	0			
		10:12	39.8	Non-Exposed	39	39	39	39	39	39	39	39	39	39	39	39	39	39	39	39	39	39	39	39	39	39	39	39	39	39	39	39	39	39	39	39	39	39	39	39	38	38	38	38	38	38
				Exposed	39	39	39	39	39	39	39	39	39	39	39	39	39	39	39	39	39	39	39	39	39	39	39	39	39	39	39	39	39	39	39	39	37	39	39	34	38	37	32	37	34	0
		11:12	42.5	Non-Exposed	41	41	41	41	41	41	41	41	41	41	41	41	41	41	41	41	41	41	41	41	41	41	41	41	41	41	41	41	41	41	41	41	41	41	41	41	40	40	40	39	39	38
				Exposed	41	41	41	41	41	41	41	41	41	41	41	41	41	41	41	41	41	41	41	41	41	41	41	41	41	41	41	41	41	40	41	41	37	41	39	34	39	37	32	37	34	0
		12:12	45	Non-Exposed	44	44	44	44	44	44	44	44	44	44	44	44	44	44	44	44	44	44	44	44	44	44	44	44	44	44	44	44	44	44	43	43	43	42	42	42	42	42	41	41	41	38
				Exposed	44	44	44	44	44	44	44	44	44	44	44	44	44	44	44	44	44	44	44	44	44	44	44	44	44	49	43	44	44	40	43	42	37	42	39	34	39	37	32	37	34	0
	D	Flat	0	Non-Exposed	37	37	37	37	37	37	37	37	37	37	37	37	37	37	37	37	37	37	37	37	37	37	37	37	37	37	37	37	37	37	37	37	37	37	37	35	37	37	33	37	37	0
				Exposed	37	37	37	37	37	37	37	37	37	37	37	37	37	37	37	37	37	37	37	37	37	37	37	37	37	37	34	37	37	32	37	36	0	37	33	0	37	31	0	35	0	0
		1:12	4.8	Non-Exposed	34	34	34	34	34	34	34	34	34	34	34	34	34	34	34	34	34	34	34	34	34	34	34	34	34	34	34	34	34	34	34	34	34	34	34	34	34	34	33	34	34	0
				Exposed	34	34	34	34	34	34	34	34	34	34	34	34	34	34	34	34	34	34	34	34	34	34	34	34	34	34	34	34	34	32	34	34	0	34	33	0	34	31	0	34	0	0
		2:12	9.5	Non-Exposed	32	32	32	32	32	32	32	32	32	32	32	32	32	32	32	32	32	32	32	32	32	32	32	32	32	32	32	32	32	32	32	32	32	32	32	32	32	32	0	32	32	0
				Exposed	32	32	32	32	32	32	32	32	32	32	32	32	32	32	32	32	32	32	32	32	32	32	32	32	32	32	0	32	0	0	32	0	0	32	0	0	32	0	0	32	0	0
		3:12	14.0	Non-Exposed	31	31	31	31	31	31	31	31	31	31	31	31	31	31	31	31	31	31	31	31	31	31	31	31	31	31	31	31	31	31	31	31	31	31	31	31	31	31	0	31	31	0
				Exposed	31	31	31	31	31	31	31	31	31	31	31	31	31	31	31	31	31	31	31	31	31	31	31	31	31	31	31	31	0	31	0	0	31	0	0	31	0	0	31	0	0	0
		4:12	18.4	Non-Exposed	31	31	31	31	31	31	31	31	31	31	31	31	31	31	31	31	31	31	31	31	31	31	31	31	31	31	31	31	31	31	31	31	31	31	31	31	31	31	0	31	31	0
				Exposed	31	31	31	31	31	31	31	31	31	31	31	31	31	31	31	31	31	31	31	31	31	31	31	31	31	31	31	31	0	31	0	0	31	0	0	31	0	0	31	0	0	0
		5:12	22.6	Non-Exposed	32	32	32	32	32	32	32	32	32	32	32	32	32	32	32	32	32	32	32	32	32	32	32	32	32	32	32	32	32	32	32	32	32	32	32	32	32	32	32	32	32	32
				Exposed	32	32	32	32	32	32	32	32	32	32	32	32	32	32	32	32	32	32	32	32	32	32	32	32	32	32	31	32	32	0	32	0	0	32	0	0	32	0	0	32	0	0
		6:12	26.6	Non-Exposed	33	33	33	33	33	33	33	33	33	33	33	33	33	33	33	33	33	33	33	33	33	33	33	33	33	33	33	33	33	33	33	33	33	33	33	33	33	33	33	33	33	32
				Exposed	33	33	33	33	33	33	33	33	33	33	33	33	33	33	33	33	33	33	33	33	33	33	33	33	33	33	33	33	33	33	33	33	0	33	32	0	33	0	0	33	0	0
		7:12	30.3	Non-Exposed	34	34	34	34	34	34	34	34	34	34	34	34	34	34	34	34	34	34	34	34	34	34	34	34	34	34	34	34	34	34	34	34	34	34	34	34	34	34	34	33	33	33
				Exposed	34	34	34	34	34	34	34	34	34	34	34	34	34	34	34	34	34	34	34	34	34	34	34	34	34	34	34	34	34	34	34	34	31	34	34	0	33	32	0			
		8:12	33.7	Non-Exposed	35	35	35	35	35	35	35	35	35	35	35	35	35	35	35	35	35	35	35	35	35	35	35	35	35	35	35	35	35	35	35	35	35	35	35	35	35	35	35	34	34	34
				Exposed	35	35	35	35	35	35	35	35	35	35	35	35	35	35	35	35	35	35	35	35	35	35	35	35	35	35	35	35	35	35	35	35	31	35	33	0	33	32	0			
		9:12	36.9	Non-Exposed	37	37	37	37	37	37	37	37	37	37	37	37	37	37	37	37	37	37	37	37	37	37	37	37	37	37	37	37	37	37	37	37	37	37	37	37	36	36	36	35	35	35
				Exposed	37	37	37	37	37	37	37	37	37	37	37	37	37	37	37	37	37	37	37	37	37	37	37	37	37	37	37	37	36	37	37	34	37	35	31	35	33	0	33	32	0	
		10:12	39.8	Non-Exposed	39	39	39	39	39	39	39	39	39	39	39	39	39	39	39	39	39	39	39	39	39	39	39	39	39	39	39	39	39	39	39	39	38	38	38	37	37	37	37	35	35	35
				Exposed	39	39	39	39	39	39	39	39	39	39	39	39	39	39	39	39	39	39	39	39	39	39	39	39	39	39	39	39	36	39	38	34	38	35	31	35	33	0	33	32	0	
		11:12	42.5	Non-Exposed	41	41	41	41	41	41	41	41	41	41	41	41	41	41	41	41	41	41	41	41	41	41	41	41	41	41	41	41	41	40	40	40	40	40	40	39	39	37	38	38	35	
				Exposed	41	41	41	41	41	41	41	41	41	41	41	41	41	41	41	41	41	41	41	41	41	41	41	41	41	39	41	41	36	40	38	34	38	35	31	35	33	0	33	32	0	
		12:12	45	Non-Exposed	44	44	44	44	44	44	44	44	44	44	44	44	44	44	44	44	44	44	44	44	44	44	44	44	44	44	43	43	43	42	42	42	41	41	40	40	40	37	40	39	35	
				Exposed	44	44	44	44	44	44	44	44	44	44	44	44	44	44	44	44	44	44	44	44	44	44	44	43	44	44	39	43	41	36	41	38	34	38	35	31	35	33	0	33	32	0

Tamarack 2.3 Rail – Gable Flush-Mount on 30 Foot Maximum Mean Roof Height – Portrait – Panel Length = 80 Inches or Less

Ground Snow Load	Exposure Category	Roof Pitch	Roof Angle	Wind Speed (mph)	95			100			105			110			115			120			125			130			140			150			160			170			180			190		
				Roof Area	1	2	3	1	2	3	1	2	3	1	2	3	1	2	3	1	2	3	1	2	3	1	2	3	1	2	3	1	2	3	1	2	3	1	2	3	1	2	3	1	2	3
90	B	Flat	0	Non-Exposed	35	35	35	35	35	35	35	35	35	35	35	35	35	35	35	35	35	35	35	35	35	35	35	35	35	35	35	35	35	35	35	35	35	35	35	35	35	35	35	35	35	35
				Exposed	35	35	35	35	35	35	35	35	35	35	35	35	35	35	35	35	35	35	35	35	35	35	35	35	35	35	35	35	35	35	35	35	35	35	35	35	35	35	34	35	35	33
		1:12	4.8	Non-Exposed	32	32	32	32	32	32	32	32	32	32	32	32	32	32	32	32	32	32	32	32	32	32	32	32	32	32	32	32	32	32	32	32	32	32	32	32	32	32	32	32	32	32
				Exposed	32	32	32	32	32	32	32	32	32	32	32	32	32	32	32	32	32	32	32	32	32	32	32	32	32	32	32	32	32	32	32	32	32	32	32	32	32	32	32	32	32	32
		2:12	9.5	Non-Exposed	30	30	30	30	30	30	30	30	30	30	30	30	30	30	30	30	30	30	30	30	30	30	30	30	30	30	30	30	30	30	30	30	30	30	30	30	30	30	30	30	30	30
				Exposed	30	30	30	30	30	30	30	30	30	30	30	30	30	30	30	30	30	30	30	30	30	30	30	30	30	30	30	30	30	30	30	30	30	30	30	30	30	30	30	30	30	0
		3:12	14.0	Non-Exposed	29	29	29	29	29	29	29	29	29	29	29	29	29	29	29	29	29	29	29	29	29	29	29	29	29	29	29	29	29	29	29	29	29	29	29	29	29	29	29	29	29	29
				Exposed	29	29	29	29	29	29	29	29	29	29	29	29	29	29	29	29	29	29	29	29	29	29	29	29	29	29	29	29	29	29	29	29	29	29	29	29	29	29	29	29	29	0
		4:12	18.4	Non-Exposed	29	29	29	29	29	29	29	29	29	29	29	29	29	29	29	29	29	29	29	29	29	29	29	29	29	29	29	29	29	29	29	29	29	29	29	29	29	29	29	29	29	29
				Exposed	29	29	29	29	29	29	29	29	29	29	29	29	29	29	29	29	29	29	29	29	29	29	29	29	29	29	29	29	29	29	29	29	29	29	29	29	29	29	29	29	29	0
		5:12	22.6	Non-Exposed	30	30	30	30	30	30	30	30	30	30	30	30	30	30	30	30	30	30	30	30	30	30	30	30	30	30	30	30	30	30	30	30	30	30	30	30	30	30	30	30	30	30
				Exposed	30	30	30	30	30	30	30	30	30	30	30	30	30	30	30	30	30	30	30	30	30	30	30	30	30	30	30	30	30	30	30	30	30	30	30	30	30	30	30	30	30	30
		6:12	26.6	Non-Exposed	31	31	31	31	31	31	31	31	31	31	31	31	31	31	31	31	31	31	31	31	31	31	31	31	31	31	31	31	31	31	31	31	31	31	31	31	31	31	31	31	31	31
				Exposed	31	31	31	31	31	31	31	31	31	31	31	31	31	31	31	31	31	31	31	31	31	31	31	31	31	31	31	31	31	31	31	31	31	31	31	31	31	31	31	31	31	31
		7:12	30.3	Non-Exposed	32	32	32	32	32	32	32	32	32	32	32	32	32	32	32	32	32	32	32	32	32	32	32	32	32	32	32	32	32	32	32	32	32	32	32	32	32	32	32	32	32	32
				Exposed	32	32	32	32	32	32	32	32	32	32	32	32	32	32	32	32	32	32	32	32	32	32	32	32	32	32	32	32	32	32	32	32	32	32	32	32	32	32	32	32	32	32
		8:12	33.7	Non-Exposed	33	33	33	33	33	33	33	33	33	33	33	33	33	33	33	33	33	33	33	33	33	33	33	33	33	33	33	33	33	33	33	33	33	33	33	33	33	33	33	33	33	33
				Exposed	33	33	33	33	33	33	33	33	33	33	33	33	33	33	33	33	33	33	33	33	33	33	33	33	33	33	33	33	33	33	33	33	33	33	33	33	33	33	32	33	33	0
		9:12	36.9	Non-Exposed	35	35	35	35	35	35	35	35	35	35	35	35	35	35	35	35	35	35	35	35	35	35	35	35	35	35	35	35	35	35	35	35	35	35	35	35	35	35	35	35	35	35
				Exposed	35	35	35	35	35	35	35	35	35	35	35	35	35	35	35	35	35	35	35	35	35	35	35	35	35	35	35	35	35	35	35	35	35	35	35	34	35	35	32	35	34	0
		10:12	39.8	Non-Exposed	37	37	37	37	37	37	37	37	37	37	37	37	37	37	37	37	37	37	37	37	37	37	37	37	37	37	37	37	37	37	37	37	37	37	37	37	37	37	37	36	36	36
				Exposed	37	37	37	37	37	37	37	37	37	37	37	37	37	37	37	37	37	37	37	37	37	37	37	37	37	37	37	37	37	37	37	37	37	37	37	34	37	37	32	36	34	0
		11:12	42.5	Non-Exposed	39	39	39	39	39	39	39	39	39	39	39	39	39	39	39	39	39	39	39	39	39	39	39	39	39	39	39	39	39	39	39	39	39	39	39	39	38	38	38	38	38	38
				Exposed	39	39	39	39	39	39	39	39	39	39	39	39	39	39	39	39	39	39	39	39	39	39	39	39	39	39	39	39	39	39	39	37	39	39	34	38	37	32	37	34	0
		12:12	45	Non-Exposed	41	41	41	41	41	41	41	41	41	41	41	41	41	41	41	41	41	41	41	41	41	41	41	41	41	41	41	41	41	41	41	41	41	41	41	40	40	40	39	39	38	38
				Exposed	41	41	41	41	41	41	41	41	41	41	41	41	41	41	41	41	41	41	41	41	41	41	41	41	41	41	41	41	41	40	41	41	37	41	39	34	39	37	32	37	34	0
	C	Flat	0	Non-Exposed	35	35	35	35	35	35	35	35	35	35	35	35	35	35	35	35	35	35	35	35	35	35	35	35	35	35	35	35	35	35	35	35	35	35	35	35	35	35	35	35	35	34
				Exposed	35	35	35	35	35	35	35	35	35	35	35	35	35	35	35	35	35	35	35	35	35	35	35	35	35	35	35	35	35	35	35	35	35	35	35	0	35	34	0	35	32	0
		1:12	4.8	Non-Exposed	32	32	32	32	32	32	32	32	32	32	32	32	32	32	32	32	32	32	32	32	32	32	32	32	32	32	32	32	32	32	32	32	32	32	32	32	32	32	32	32	32	32
				Exposed	32	32	32	32	32	32	32	32	32	32	32	32	32	32	32	32	32	32	32	32	32	32	32	32	32	32	32	32	32	32	32	32	32	32	32	0	32	32	0	32	32	0
		2:12	9.5	Non-Exposed	30	30	30	30	30	30	30	30	30	30	30	30	30	30	30	30	30	30	30	30	30	30	30	30	30	30	30	30	30	30	30	30	30	30	30	30	30	30	30	30	30	30
				Exposed	30	30	30	30	30	30	30	30	30	30	30	30	30	30	30	30	30	30	30	30	30	30	30	30	30	30	30	30	30	30	30	0	30	30	0	30	0	0	30	0	0	0
		3:12	14.0	Non-Exposed	29	29	29	29	29	29	29	29	29	29	29	29	29	29	29	29	29	29	29	29	29	29	29	29	29	29	29	29	29	29	29	29	29	29	29	29	29	29	29	29	29	29
				Exposed	29	29	29	29	29	29	29	29	29	29	29	29	29	29	29	29	29	29	29	29	29	29	29	29	29	29	29	29	29	29	29	0	29	29	0	29	0	0	29	0	0	0
		4:12	18.4	Non-Exposed	29	29	29	29	29	29	29	29	29	29	29	29	29	29	29	29	29	29	29	29	29	29	29	29	29	29	29	29	29	29	29	29	29	29	29	29	29	29	29	29	29	29
				Exposed	29	29	29	29	29	29	29	29	29	29	29	29	29	29	29	29	29	29	29	29	29	29	29	29	29	29	29	29	29	29	29	0	29	29	0	29	0	0	29	0	0	0
		5:12	22.6	Non-Exposed	30	30	30	30	30	30	30	30	30	30	30	30	30	30	30	30	30	30	30	30	30	30	30	30	30	30	30	30	30	30	30	30	30	30	30	30	30	30	30	30	30	30
				Exposed	30	30	30	30	30	30	30	30	30	30	30	30	30	30	30	30	30	30	30	30	30	30	30	30	30	30	30	30	30	30	30	30	30	30	30	0	30	0	0	30	0	0
90		6:12	26.6	Non-Exposed	31	31	31	31	31	31	31	31	31	31	31	31	31	31	31	31	31	31	31	31	31	31	31	31	31	31	31	31	31	31	31	31	31	31	31	31	31	31	31	31	31	31
				Exposed	31	31	31	31	31	31	31	31	31	31	31	31	31	31	31	31	31	31	31	31	31	31	31	31	31	31	31	31	31	31	31	31	31	31	31	31	31	31	0	31	0	0
		7:12	30.3	Non-Exposed	32	32	32	32	32	32	32	32	32	32	32	32	32	32	32	32	32	32	32	32	32	32	32	32	32	32	32	32	32	32	32	32	32	32	32	32	32	32	32	32	32	32
				Exposed	32	32	32	32	32	32	32	32	32	32	32	32	32	32	32	32	32	32	32	32	32	32	32	32	32	32	32	32	32	32	32	32	32	32	32	32	32	32	32	32	32	0
		8:12	33.7	Non-Exposed	33	33	33	33	33	33	33	33	33	33	33	33	33	33	33	33	33	33	33	33	33	33	33	33	33	33	33	33	33	33	33	33	33	33	33	33	33	33	33	33	33	33
				Exposed	33	33	33	33	33	33	33	33	33	33	33	33	33	33	33	33	33	33	33	33	33	33	33	33	33	33	33	33	33	33	33	33	33	33	33	33	33	32	33	33	33	0
		9:12	36.9	Non-Exposed	35	35	35	35	35	35	35	35	35	35	35	35	35	35	35	35	35	35	35	35	35	35	35	35	35	35	35	35	35	35	35	35	35	35	35	35	35	35	35	35	35	35
				Exposed	35	35	35	35	35	35	35	35	35	35	35	35	35	35	35	35	35	35	35	35	35	35	35	35	35	35	35	35	35	35	35	35	35	35	34	0	35	35	32	35	34	0
		10:12	39.8	Non-Exposed	37	37	37	37	37	37	37	37	37	37	37	37	37	37	37	37	37	37	37	37	37	37	37	37	37	37	37	37	37	37	37	37	37	37	37	37	37	37	37	36	36	36
				Exposed	37	37	37	37	37	37	37	37	37	37	37	37	37	37	37	37	37	37	37	37	37	37	37	37	37	37	37	37	37	37	37	37	37	37	34	0	37	37	32	36	34	0
		11:12	42.5	Non-Exposed	39	39	39	39	39	39	39	39	39	39	39	39	39	39	39	39	39	39	39	39	39	39	39	39	39	39	39	39	39	39	39	39	39	39	39	39	39	39	38	38	38	38
				Exposed	39	39	39	39	39	39	39	39	39	39	39	39	39	39	39	39	39	39	39	39	39	39	39	39	39	39	39	39	39	39	39	37	39	39	34	38	37	32	37	34	0
		12:12	45	Non-Exposed	41	41	41	41	41	41	41	41	41	41	41	41	41	41	41	41	41	41	41	41	41	41	41	41	41	41	41	41	41	41	41	41	41	41	41	40	40	40	39	39	38	38
				Exposed	41	41	41	41	41	41	41	41	41	41	41	41	41	41	41	41	41	41	41	41	41	41	41	41	41	41	41	41	41	40	41	41	37	41	39	34	39	37	32	37	34	0
	D	Flat	0	Non-Exposed	35	35	35	35	35	35	35	35	35	35	35	35	35	35	35	35	35	35	35	35	35	35	35	35	35	35	35	35	35	35	35	35	35	35	35	35	35	35	33	35	35	0
				Exposed	35	35	35	35	35	35	35	35	35	35	35	35	35	35	35	35	35	35	35	35	35	35	35	35	34	35	35	32	35	35	0	35	33	0	35	31	0	35	0	0	0
		1:12	4.8	Non-Exposed	32	32	32	32	32	32	32	32	32	32	32	32	32	32	32	32	32	32	32	32	32	32	32	32	32	32	32	32	32	32	32	32	32	32	32	32	32	32	32	32	32	0
				Exposed	32	32	32	32	32	32	32	32	32	32	32	32	32	32	32	32	32	32	32	32	32	32	32	32	32	32	32	32	32	32	32	0	32	32	0	32	31	0	32	0	0	0
		2:12	9.5	Non-Exposed	30	30	30	30	30	30	30	30	30	30	30	30	30	30	30	30	30	30	30	30	30	30	30	30	30	30	30	30	30	30	30	30	30	30	30	30	30	30	30	30	30	0
				Exposed	30	30	30	30	30	30	30	30	30	30	30	30	30	30	30	30	30	30	30	30	30	30	30	30	30	30	30	30	30	0	30	0	0	30	0	0	30	0	0	30	0	0
		3:12	14.0	Non-Exposed	29	29	29	29	29	29	29	29	29	29	29	29	29	29	29	29	29	29	29	29	29	29	29	29	29	29	29	29	29	29	29	29	29	29	29	29	29	29	0	29	29	0
				Exposed	29	29	29	29	29	29	29	29	29	29	29	29	29	29	29	29	29	29	29	29	29	29	29	29	29	29	29	29	29	0	29	0	0	29	0	0	29	0	0	29	0	0
		4:12	18.4	Non-Exposed	29	29	29	29	29	29	29	29	29	29	29	29	29	29	29	29	29	29	29	29	29	29	29	29	29	29	29	29	29	29	29	29	29	29	29	29	29	29	0	29	29	0
				Exposed	29	29	29	29	29	29	29	29	29	29	29	29	29	29	29	29	29	29	29	29	29	29	29	29	29	29	29	29	29	0	29	0	0	29	0	0	29	0	0	29	0	0
		5:12	22.6	Non-Exposed	30	30	30	30	30	30	30	30	30	30	30	30	30	30	30	30	30	30	30	30	30	30	30	30	30	30	30	30	30	30	30	30	30	30	30	30	30	30	30	30	30	30
				Exposed	30	30	30	30	30	30	30	30	30	30	30	30	30	30	30	30	30	30	30	30	30	30	30	30	30	30	30	30	30	30	30	30	30	30	30	0	30	0	0	30	0	0
		6:12	26.6	Non-Exposed	31	31	31	31	31	31	31	31	31	31	31	31	31	31	31	31	31	31	31	31	31	31	31	31	31	31	31	31	31	31	31	31	31	31	31	31	31	31	31	31	31	31
				Exposed	31	31	31	31	31	31	31	31	31	31	31	31	31	31	31	31	31	31	31	31	31	31	31	31	31	31	31	31	31	31	31	0	31	31	0	31	0	0	31	0	0	0
		7:12	30.3	Non-Exposed	32	32	32	32	32	32	32	32	32	32	32	32	32	32	32	32	32	32	32	32	32	32	32	32	32	32	32	32	32	32	32	32	32	32	32	32	32	32	32	32	32	32
				Exposed	32	32	32	32	32	32	32	32	32	32	32	32	32	32	32	32	32	32	32	32	32	32	32	32	32	32	32	32	32	32	32	32	32	31	32	32	0	32	32	0	32	0
		8:12	33.7	Non-Exposed	33	33	33	33	33	33	33	33	33	33	33	33	33	33	33	33	33	33	33	33	33	33	33	33	33	33	33	33	33	33	33	33	33	33	33	33	33	33	33	33	33	33
				Exposed	33	33	33	33	33	33	33	33	33	33	33	33	33	33	33	33	33	33	33	33	33	33	33	33	33	33	33	33	33	33	33	33	33	31	33	33	0	33	32	0	33	0
		9:12	36.9	Non-Exposed	35	35	35	35	35	35	35	35	35	35	35	35	35	35	35	35	35	35	35	35	35	35	35	35	35	35	35	35	35	35	35	35	35	35	35	35	35	35	34	34	34	34
				Exposed	35	35	35	35	35	35	35	35	35	35	35	35	35	35	35	35	35	35	35	35	35	35	35	35	35	35	35	35	35	35	35	34	35	35	31	35	33	0	33	32	0	0
		10:12	39.8	Non-Exposed	37	37	37	37	37	37	37	37	37	37	37	37	37	37	37	37	37	37	37	37	37	37	37	37	37	37	37	37	37	37	37	37	37	37	37	36	36	36	35	35	35	35
				Exposed	37	37	37	37	37	37	37	37	37	37	37	37	37	37	37	37	37	37	37	37	37	37	37	37	37	37	37	37	37	36	37	37	34	37	35	31	35	33	0	33	32	0
		11:12	42.5	Non-Exposed	39	39	39	39	39	39	39	39	39	39	39	39	39	39	39	39	39	39	39	39	39	39	39	39	39	39	39	39	39	39	39	39	38	38	38	37	37	37	37	37	35	35
				Exposed	39	39	39	39	39	39	39	39	39	39	39	39	39	39	39	39	39	39	39	39	39	39	39	39	39	39	39	39	39	36	39	38	34	38	35	31	35	33	0	33	32	0
		12:12	45	Non-Exposed	41	41	41	41	41	41	41	41	41	41	41	41	41	41	41	41	41	41	41	41	41	41	41	41	41	41	41	41	41	40	40	40	40	40	40	39	39	37	38	38	35	35
				Exposed	41	41	41	41	41	41	41	41	41	41	41	41	41	41	41	41	41	41	41	41	41	41	41	41	39	41	41	36	40	38	34	38	35	31	35	33	0	33	32	0		

Tamarack 2.3 Rail – Gable Flush-Mount on 30 Foot Maximum Mean Roof Height – Portrait – Panel Length = 80 Inches or Less

Ground Snow Load	Exposure Category	Roof Pitch	Roof Angle	Wind Speed (mph)	95			100			105			110			115			120			125			130			140			150			160			170			180			190		
				Roof Area	1	2	3	1	2	3	1	2	3	1	2	3	1	2	3	1	2	3	1	2	3	1	2	3	1	2	3	1	2	3	1	2	3	1	2	3	1	2	3	1	2	3
100	B	Flat	0	Non-Exposed	33	33	33	33	33	33	33	33	33	33	33	33	33	33	33	33	33	33	33	33	33	33	33	33	33	33	33	33	33	33	33	33	33	33	33	33	33	33	33	33	33	33
				Exposed	33	33	33	33	33	33	33	33	33	33	33	33	33	33	33	33	33	33	33	33	33	33	33	33	33	33	33	33	33	33	33	33	33	33	33	33	33	33	33	33	33	33
		1:12	4.8	Non-Exposed	30	30	30	30	30	30	30	30	30	30	30	30	30	30	30	30	30	30	30	30	30	30	30	30	30	30	30	30	30	30	30	30	30	30	30	30	30	30	30	30	30	30
				Exposed	30	30	30	30	30	30	30	30	30	30	30	30	30	30	30	30	30	30	30	30	30	30	30	30	30	30	30	30	30	30	30	30	30	30	30	30	30	30	30	30	30	30
		2:12	9.5	Non-Exposed	29	29	29	29	29	29	29	29	29	29	29	29	29	29	29	29	29	29	29	29	29	29	29	29	29	29	29	29	29	29	29	29	29	29	29	29	29	29	29	29	29	29
				Exposed	29	29	29	29	29	29	29	29	29	29	29	29	29	29	29	29	29	29	29	29	29	29	29	29	29	29	29	29	29	29	29	29	29	29	29	29	29	29	29	29	29	0
		3:12	14.0	Non-Exposed	28	28	28	28	28	28	28	28	28	28	28	28	28	28	28	28	28	28	28	28	28	28	28	28	28	28	28	28	28	28	28	28	28	28	28	28	28	28	28	28	28	28
				Exposed	28	28	28	28	28	28	28	28	28	28	28	28	28	28	28	28	28	28	28	28	28	28	28	28	28	28	28	28	28	28	28	28	28	28	28	28	28	28	28	28	28	0
		4:12	18.4	Non-Exposed	28	28	28	28	28	28	28	28	28	28	28	28	28	28	28	28	28	28	28	28	28	28	28	28	28	28	28	28	28	28	28	28	28	28	28	28	28	28	28	28	28	28
				Exposed	28	28	28	28	28	28	28	28	28	28	28	28	28	28	28	28	28	28	28	28	28	28	28	28	28	28	28	28	28	28	28	28	28	28	28	28	28	28	28	28	28	0
		5:12	22.6	Non-Exposed	28	28	28	28	28	28	28	28	28	28	28	28	28	28	28	28	28	28	28	28	28	28	28	28	28	28	28	28	28	28	28	28	28	28	28	28	28	28	28	28	28	28
				Exposed	28	28	28	28	28	28	28	28	28	28	28	28	28	28	28	28	28	28	28	28	28	28	28	28	28	28	28	28	28	28	28	28	28	28	28	28	28	28	28	28	28	28
		6:12	26.6	Non-Exposed	29	29	29	29	29	29	29	29	29	29	29	29	29	29	29	29	29	29	29	29	29	29	29	29	29	29	29	29	29	29	29	29	29	29	29	29	29	29	29	29	29	29
				Exposed	29	29	29	29	29	29	29	29	29	29	29	29	29	29	29	29	29	29	29	29	29	29	29	29	29	29	29	29	29	29	29	29	29	29	29	29	29	29	29	29	29	0
		7:12	30.3	Non-Exposed	30	30	30	30	30	30	30	30	30	30	30	30	30	30	30	30	30	30	30	30	30	30	30	30	30	30	30	30	30	30	30	30	30	30	30	30	30	30	30	30	30	30
				Exposed	30	30	30	30	30	30	30	30	30	30	30	30	30	30	30	30	30	30	30	30	30	30	30	30	30	30	30	30	30	30	30	30	30	30	30	30	30	30	30	30	30	0
		8:12	33.7	Non-Exposed	32	32	32	32	32	32	32	32	32	32	32	32	32	32	32	32	32	32	32	32	32	32	32	32	32	32	32	32	32	32	32	32	32	32	32	32	32	32	32	32	32	32
				Exposed	32	32	32	32	32	32	32	32	32	32	32	32	32	32	32	32	32	32	32	32	32	32	32	32	32	32	32	32	32	32	32	32	32	32	32	32	32	32	32	32	32	32
		9:12	36.9	Non-Exposed	33	33	33	33	33	33	33	33	33	33	33	33	33	33	33	33	33	33	33	33	33	33	33	33	33	33	33	33	33	33	33	33	33	33	33	33	33	33	33	33	33	33
				Exposed	33	33	33	33	33	33	33	33	33	33	33	33	33	33	33	33	33	33	33	33	33	33	33	33	33	33	33	33	33	33	33	33	33	33	33	33	33	33	32	33	33	0
		10:12	39.8	Non-Exposed	35	35	35	35	35	35	35	35	35	35	35	35	35	35	35	35	35	35	35	35	35	35	35	35	35	35	35	35	35	35	35	35	35	35	35	35	35	35	35	35	35	35
				Exposed	35	35	35	35	35	35	35	35	35	35	35	35	35	35	35	35	35	35	35	35	35	35	35	35	35	35	35	35	35	35	35	35	35	35	35	34	35	35	32	35	34	0
		11:12	42.5	Non-Exposed	37	37	37	37	37	37	37	37	37	37	37	37	37	37	37	37	37	37	37	37	37	37	37	37	37	37	37	37	37	37	37	37	37	37	37	37	37	37	36	36	36	36
				Exposed	37	37	37	37	37	37	37	37	37	37	37	37	37	37	37	37	37	37	37	37	37	37	37	37	37	37	37	37	37	37	37	37	37	37	37	34	37	37	32	36	34	0
		12:12	45	Non-Exposed	39	39	39	39	39	39	39	39	39	39	39	39	39	39	39	39	39	39	39	39	39	39	39	39	39	39	39	39	39	39	39	39	39	39	39	39	39	39	39	38	38	38
				Exposed	39	39	39	39	39	39	39	39	39	39	39	39	39	39	39	39	39	39	39	39	39	39	39	39	39	49	39	39	39	39	39	39	37	39	39	34	39	37	32	37	34	0
	C	Flat	0	Non-Exposed	33	33	33	33	33	33	33	33	33	33	33	33	33	33	33	33	33	33	33	33	33	33	33	33	33	33	33	33	33	33	33	33	33	33	33	33	33	33	33	33	33	33
				Exposed	33	33	33	33	33	33	33	33	33	33	33	33	33	33	33	33	33	33	33	33	33	33	33	33	33	33	33	33	33	33	33	33	33	33	0	33	33	0	33	32	0
		1:12	4.8	Non-Exposed	30	30	30	30	30	30	30	30	30	30	30	30	30	30	30	30	30	30	30	30	30	30	30	30	30	30	30	30	30	30	30	30	30	30	30	30	30	30	30	30	30	30
				Exposed	30	30	30	30	30	30	30	30	30	30	30	30	30	30	30	30	30	30	30	30	30	30	30	30	30	30	30	30	30	30	30	30	30	30	0	30	30	0	30	30	0
		2:12	9.5	Non-Exposed	29	29	29	29	29	29	29	29	29	29	29	29	29	29	29	29	29	29	29	29	29	29	29	29	29	29	29	29	29	29	29	29	29	29	29	29	29	29	29	29	29	29
				Exposed	29	29	29	29	29	29	29	29	29	29	29	29	29	29	29	29	29	29	29	29	29	29	29	29	29	29	29	29	29	0	29	29	0	29	0	0	29	0	0	29	0	0
		3:12	14.0	Non-Exposed	28	28	28	28	28	28	28	28	28	28	28	28	28	28	28	28	28	28	28	28	28	28	28	28	28	28	28	28	28	28	28	28	28	28	28	28	28	28	28	28	28	28
				Exposed	28	28	28	28	28	28	28	28	28	28	28	28	28	28	28	28	28	28	28	28	28	28	28	28	28	28	28	28	28	0	28	28	0	28	0	0	28	0	0	28	0	0
		4:12	18.4	Non-Exposed	28	28	28	28	28	28	28	28	28	28	28	28	28	28	28	28	28	28	28	28	28	28	28	28	28	28	28	28	28	28	28	28	28	28	28	28	28	28	28	28	28	28
				Exposed	28	28	28	28	28	28	28	28	28	28	28	28	28	28	28	28	28	28	28	28	28	28	28	28	28	28	28	28	28	0	28	28	0	28	0	0	28	0	0	28	0	0
		5:12	22.6	Non-Exposed	28	28	28	28	28	28	28	28	28	28	28	28	28	28	28	28	28	28	28	28	28	28	28	28	28	28	28	28	28	28	28	28	28	28	28	28	28	28	28	28	28	28
				Exposed	28	28	28	28	28	28	28	28	28	28	28	28	28	28	28	28	28	28	28	28	28	28	28	28	28	28	28	28	28	28	28	28	28	28	28	28	28	28	0	28	0	0
		6:12	26.6	Non-Exposed	29	29	29	29	29	29	29	29	29	29	29	29	29	29	29	29	29	29	29	29	29	29	29	29	29	29	29	29	29	29	29	29	29	29	29	29	29	29	29	29	29	29
				Exposed	29	29	29	29	29	29	29	29	29	29	29	29	29	29	29	29	29	29	29	29	29	29	29	29	29	29	29	29	29	29	29	29	29	29	29	29	29	29	0	29	0	0
		7:12	30.3	Non-Exposed	30	30	30	30	30	30	30	30	30	30	30	30	30	30	30	30	30	30	30	30	30	30	30	30	30	30	30	30	30	30	30	30	30	30	30	30	30	30	30	30	30	30
				Exposed	30	30	30	30	30	30	30	30	30	30	30	30	30	30	30	30	30	30	30	30	30	30	30	30	30	30	30	30	30	30	30	30	30	30	30	30	30	30	30	30	30	0
		8:12	33.7	Non-Exposed	32	32	32	32	32	32	32	32	32	32	32	32	32	32	32	32	32	32	32	32	32	32	32	32	32	32	32	32	32	32	32	32	32	32	32	32	32	32	32	32	32	32
				Exposed	32	32	32	32	32	32	32	32	32	32	32	32	32	32	32	32	32	32	32	32	32	32	32	32	32	32	32	32	32	32	32	32	32	32	32	32	32	32	32	32	32	0
		9:12	36.9	Non-Exposed	33	33	33	33	33	33	33	33	33	33	33	33	33	33	33	33	33	33	33	33	33	33	33	33	33	33	33	33	33	33	33	33	33	33	33	33	33	33	33	33	33	33
				Exposed	33	33	33	33	33	33	33	33	33	33	33	33	33	33	33	33	33	33	33	33	33	33	33	33	33	33	33	33	33	33	33	33	33	33	33	33	33	32	33	33	0	0
		10:12	39.8	Non-Exposed	35	35	35	35	35	35	35	35	35	35	35	35	35	35	35	35	35	35	35	35	35	35	35	35	35	35	35	35	35	35	35	35	35	35	35	35	35	35	35	35	35	35
				Exposed	35	35	35	35	35	35	35	35	35	35	35	35	35	35	35	35	35	35	35	35	35	35	35	35	35	35	35	35	35	35	35	35	35	35	34	35	35	32	35	34	0	0
		11:12	42.5	Non-Exposed	37	37	37	37	37	37	37	37	37	37	37	37	37	37	37	37	37	37	37	37	37	37	37	37	37	37	37	37	37	37	37	37	37	37	37	37	37	36	36	36	36	35
				Exposed	37	37	37	37	37	37	37	37	37	37	37	37	37	37	37	37	37	37	37	37	37	37	37	37	37	37	37	37	37	37	37	37	37	37	34	37	35	31	35	33	0	33	32	0
		12:12	45	Non-Exposed	39	39	39	39	39	39	39	39	39	39	39	39	39	39	39	39	39	39	39	39	39	39	39	39	39	39	39	39	39	39	39	39	39	39	39	38	38	38	38	38	37	35
				Exposed	39	39	39	39	39	39	39	39	39	39	39	39	39	39	39	39	39	39	39	39	39	39	39	39	39	39	39	39	39	36	39	38	34	38	35	31	35	33	0	33	32	0
	D	Flat	0	Non-Exposed	33	33	33	33	33	33	33	33	33	33	33	33	33	33	33	33	33	33	33	33	33	33	33	33	33	33	33	33	33	33	33	33	33	33	33	33	33	33	33	33	33	0
				Exposed	33	33	33	33	33	33	33	33	33	33	33	33	33	33	33	33	33	33	33	33	33	33	33	33	33	33	33	33	32	33	33	0	33	33	0	33	31	0	33	0	0
		1:12	4.8	Non-Exposed	30	30	30	30	30	30	30	30	30	30	30	30	30	30	30	30	30	30	30	30	30	30	30	30	30	30	30	30	30	30	30	30	30	30	30	30	30	30	30	30	30	0
				Exposed	30	30	30	30	30	30	30	30	30	30	30	30	30	30	30	30	30	30	30	30	30	30	30	30	30	30	30	30	30	30	30	0	30	30	0	30	30	0	30	0	0
		2:12	9.5	Non-Exposed	29	29	29	29	29	29	29	29	29	29	29	29	29	29	29	29	29	29	29	29	29	29	29	29	29	29	29	29	29	29	29	29	29	29	29	29	29	29	0	29	29	0
				Exposed	29	29	29	29	29	29	29	29	29	29	29	29	29	29	29	29	29	29	29	29	29	29	29	29	29	29	29	29	29	29	29	0	29	29	0	29	0	0	29	0	0
		3:12	14.0	Non-Exposed	28	28	28	28	28	28	28	28	28	28	28	28	28	28	28	28	28	28	28	28	28	28	28	28	28	28	28	28	28	28	28	28	28	28	28	28	28	28	0	28	28	0
				Exposed	28	28	28	28	28	28	28	28	28	28	28	28	28	28	28	28	28	28	28	28	28	28	28	28	28	28	28	28	28	0	28	0	0	28	0	0	28	0	0	28	0	0
		4:12	18.4	Non-Exposed	28	28	28	28	28	28	28	28	28	28	28	28	28	28	28	28	28	28	28	28	28	28	28	28	28	28	28	28	28	28	28	28	28	28	28	28	28	28	0	28	28	0
				Exposed	28	28	28	28	28	28	28	28	28	28	28	28	28	28	28	28	28	28	28	28	28	28	28	28	28	28	28	28	28	0	28	0	0	28	0	0	28	0	0	28	0	0
		5:12	22.6	Non-Exposed	28	28	28	28	28	28	28	28	28	28	28	28	28	28	28	28	28	28	28	28	28	28	28	28	28	28	28	28	28	28	28	28	28	28	28	28	28	28	28	28	28	28
				Exposed	28	28	28	28	28	28	28	28	28	28	28	28	28	28	28	28	28	28	28	28	28	28	28	28	28	28	28	28	28	28	28	28	28	28	28	28	28	0	28	0	0
		6:12	26.6	Non-Exposed	29	29	29	29	29	29	29	29	29	29	29	29	29	29	29	29	29	29	29	29	29	29	29	29	29	29	29	29	29	29	29	29	29	29	29	29	29	29	29	29	29	29
				Exposed	29	29	29	29	29	29	29	29	29	29	29	29	29	29	29	29	29	29	29	29	29	29	29	29	29	29	29	29	29	29	29	0	29	29	0	29	0	0	29	0	0
		7:12	30.3	Non-Exposed	30	30	30	30	30	30	30	30	30	30	30	30	30	30	30	30	30	30	30	30	30	30	30	30	30	30	30	30	30	30	30	30	30	30	30	30	30	30	30	30	30	30
				Exposed	30	30	30	30	30	30	30	30	30	30	30	30	30	30	30	30	30	30	30	30	30	30	30	30	30	30	30	30	30	30	30	30	30	30	30	30	30	30	0	30	0	0
		8:12	33.7	Non-Exposed	32	32	32	32	32	32	32	32	32	32	32	32	32	32	32	32	32	32	32	32	32	32	32	32	32	32	32	32	32	32	32	32	32	32	32	32	32	32	32	32	32	32
				Exposed	32	32	32	32	32	32	32	32	32	32	32	32	32	32	32	32	32	32	32	32	32	32	32	32	32	32	32	32	32	32	32	32	32	32	31	32	32	0	32	32	0
		9:12	36.9	Non-Exposed	33	33	33	33	33	33	33	33	33	33	33	33	33	33	33	33	33	33	33	33	33	33	33	33	33	33	33	33	33	33	33	33	33	33	33	33	33	33	33	33	33	33
				Exposed	33	33	33	33	33	33	33	33	33	33	33	33	33	33	33	33	33	33	33	33	33	33	33	33	33	33	33	33	33	33	33	33	33	33	31	33	33	0	33	32	0
		10:12	39.8	Non-Exposed	35	35	35	35	35	35	35	35	35	35	35	35	35	35	35	35	35	35	35	35	35	35	35	35	35	35	35	35	35	35	35	35	35	35	35	35	35	35	34	34	34
				Exposed	35	35	35	35	35	35	35	35	35	35	35	35	35	35	35	35	35	35	35	35	35	35	35	35	35	35	35	35	35	35	35	34	35	35	31	35	33	0	33	32	0
		11:12	42.5	Non-Exposed	37	37	37	37	37	37	37	37	37	37	37	37	37	37	37	37	37	37	37	37	37	37	37	37	37	37	37	37	37	37	37	37	37	37	37	37	36	36	36	36	36	35
				Exposed	37	37	37	37	37	37	37	37	37	37	37	37	37	37	37	37	37	37	37	37	37	37	37	37	37	37	37	37	37	36	37	37	34	37	35	31	35	33	0	33	32	0
		12:12	45	Non-Exposed	39	39	39	39	39	39	39	39	39	39	39	39	39	39	39	39	39	39	39	39	39	39	39	39	39	39	39	39	39	39	39	39	39	39	38	38	38	38	38	37	37	35
				Exposed	39	39	39	39	39	39	39	39	39	39	39	39	39	39	39	39	39	39	39	39	39	39	39	39	39	39	39	39	39	36	39	38	34	38	35	31	35	33	0	33	32	0

Tamarack 2.3 Rail – Gable Flush-Mount on 30 Foot Maximum Mean Roof Height – Portrait – Panel Length = 80 Inches or Less

Ground Snow Load	Exposure Category	Roof Pitch	Roof Angle	Wind Speed (mph)	95			100			105			110			115			120			125			130			140			150			160			170			180			190		
				Roof Area	1	2	3	1	2	3	1	2	3	1	2	3	1	2	3	1	2	3	1	2	3	1	2	3	1	2	3	1	2	3	1	2	3	1	2	3	1	2	3	1	2	3
110	B	Flat	0	Non-Exposed	31	31	31	31	31	31	31	31	31	31	31	31	31	31	31	31	31	31	31	31	31	31	31	31	31	31	31	31	31	31	31	31	31	31	31	31	31	31	31	31	31	31
				Exposed	31	31	31	31	31	31	31	31	31	31	31	31	31	31	31	31	31	31	31	31	31	31	31	31	31	31	31	31	31	31	31	31	31	31	31	31	31	31	31	31	31	31
		1:12	4.8	Non-Exposed	29	29	29	29	29	29	29	29	29	29	29	29	29	29	29	29	29	29	29	29	29	29	29	29	29	29	29	29	29	29	29	29	29	29	29	29	29	29	29	29	29	29
				Exposed	29	29	29	29	29	29	29	29	29	29	29	29	29	29	29	29	29	29	29	29	29	29	29	29	29	29	29	29	29	29	29	29	29	29	29	29	29	29	29	29	29	29
		2:12	9.5	Non-Exposed	27	27	27	27	27	27	27	27	27	27	27	27	27	27	27	27	27	27	27	27	27	27	27	27	27	27	27	27	27	27	27	27	27	27	27	27	27	27	27	27	27	27
				Exposed	27	27	27	27	27	27	27	27	27	27	27	27	27	27	27	27	27	27	27	27	27	27	27	27	27	27	27	27	27	27	27	27	27	27	27	27	27	27	27	27	27	0
		3:12	14.0	Non-Exposed	26	26	26	26	26	26	26	26	26	26	26	26	26	26	26	26	26	26	26	26	26	26	26	26	26	26	26	26	26	26	26	26	26	26	26	26	26	26	26	26	26	26
				Exposed	26	26	26	26	26	26	26	26	26	26	26	26	26	26	26	26	26	26	26	26	26	26	26	26	26	26	26	26	26	26	26	26	26	26	26	26	26	26	26	26	26	0
		4:12	18.4	Non-Exposed	26	26	26	26	26	26	26	26	26	26	26	26	26	26	26	26	26	26	26	26	26	26	26	26	26	26	26	26	26	26	26	26	26	26	26	26	26	26	26	26	26	26
				Exposed	26	26	26	26	26	26	26	26	26	26	26	26	26	26	26	26	26	26	26	26	26	26	26	26	26	26	26	26	26	26	26	26	26	26	26	26	26	26	26	26	26	0
		5:12	22.6	Non-Exposed	27	27	27	27	27	27	27	27	27	27	27	27	27	27	27	27	27	27	27	27	27	27	27	27	27	27	27	27	27	27	27	27	27	27	27	27	27	27	27	27	27	27
				Exposed	27	27	27	27	27	27	27	27	27	27	27	27	27	27	27	27	27	27	27	27	27	27	27	27	27	27	27	27	27	27	27	27	27	27	27	27	27	27	27	27	27	27
		6:12	26.6	Non-Exposed	28	28	28	28	28	28	28	28	28	28	28	28	28	28	28	28	28	28	28	28	28	28	28	28	28	28	28	28	28	28	28	28	28	28	28	28	28	28	28	28	28	28
				Exposed	28	28	28	28	28	28	28	28	28	28	28	28	28	28	28	28	28	28	28	28	28	28	28	28	28	28	28	28	28	28	28	28	28	28	28	28	28	28	28	28	28	0
		7:12	30.3	Non-Exposed	29	29	29	29	29	29	29	29	29	29	29	29	29	29	29	29	29	29	29	29	29	29	29	29	29	29	29	29	29	29	29	29	29	29	29	29	29	29	29	29	29	29
				Exposed	29	29	29	29	29	29	29	29	29	29	29	29	29	29	29	29	29	29	29	29	29	29	29	29	29	29	29	29	29	29	29	29	29	29	29	29	29	29	29	29	29	0
		8:12	33.7	Non-Exposed	30	30	30	30	30	30	30	30	30	30	30	30	30	30	30	30	30	30	30	30	30	30	30	30	30	30	30	30	30	30	30	30	30	30	30	30	30	30	30	30	30	30
				Exposed	30	30	30	30	30	30	30	30	30	30	30	30	30	30	30	30	30	30	30	30	30	30	30	30	30	30	30	30	30	30	30	30	30	30	30	30	30	30	30	30	30	0
		9:12	36.9	Non-Exposed	32	32	32	32	32	32	32	32	32	32	32	32	32	32	32	32	32	32	32	32	32	32	32	32	32	32	32	32	32	32	32	32	32	32	32	32	32	32	32	32	32	32
				Exposed	32	32	32	32	32	32	32	32	32	32	32	32	32	32	32	32	32	32	32	32	32	32	32	32	32	32	32	32	32	32	32	32	32	32	32	32	32	32	32	32	32	0
		10:12	39.8	Non-Exposed	34	34	34	34	34	34	34	34	34	34	34	34	34	34	34	34	34	34	34	34	34	34	34	34	34	34	34	34	34	34	34	34	34	34	34	34	34	34	34	34	34	34
				Exposed	34	34	34	34	34	34	34	34	34	34	34	34	34	34	34	34	34	34	34	34	34	34	34	34	34	34	34	34	34	34	34	34	34	34	34	34	34	34	32	34	34	0
		11:12	42.5	Non-Exposed	35	35	35	35	35	35	35	35	35	35	35	35	35	35	35	35	35	35	35	35	35	35	35	35	35	35	35	35	35	35	35	35	35	35	35	35	35	35	35	35	35	35
				Exposed	35	35	35	35	35	35	35	35	35	35	35	35	35	35	35	35	35	35	35	35	35	35	35	35	35	35	35	35	35	35	35	35	35	35	35	34	35	35	32	35	34	0
		12:12	45	Non-Exposed	38	38	38	38	38	38	38	38	38	38	38	38	38	38	38	38	38	38	38	38	38	38	38	38	38	38	38	38	38	38	38	38	38	38	38	38	37	37	37	37	37	37
				Exposed	38	38	38	38	38	38	38	38	38	38	38	38	38	38	38	38	38	38	38	38	38	38	38	38	38	38	38	38	38	38	38	38	37	38	38	34	37	37	32	37	34	0
	C	Flat	0	Non-Exposed	31	31	31	31	31	31	31	31	31	31	31	31	31	31	31	31	31	31	31	31	31	31	31	31	31	31	31	31	31	31	31	31	31	31	31	31	31	31	31	31	31	31
				Exposed	31	31	31	31	31	31	31	31	31	31	31	31	31	31	31	31	31	31	31	31	31	31	31	31	31	31	31	31	31	31	31	31	31	31	0	31	31	0	31	31	0
		1:12	4.8	Non-Exposed	29	29	29	29	29	29	29	29	29	29	29	29	29	29	29	29	29	29	29	29	29	29	29	29	29	29	29	29	29	29	29	29	29	29	29	29	29	29	29	29	29	29
				Exposed	29	29	29	29	29	29	29	29	29	29	29	29	29	29	29	29	29	29	29	29	29	29	29	29	29	29	29	29	29	29	29	29	29	29	0	29	29	0	29	29	0
		2:12	9.5	Non-Exposed	27	27	27	27	27	27	27	27	27	27	27	27	27	27	27	27	27	27	27	27	27	27	27	27	27	27	27	27	27	27	27	27	27	27	27	27	27	27	27	27	27	27
				Exposed	27	27	27	27	27	27	27	27	27	27	27	27	27	27	27	27	27	27	27	27	27	27	27	27	27	27	27	27	27	0	27	27	0	27	0	0	27	0	0	27	0	0
		3:12	14.0	Non-Exposed	26	26	26	26	26	26	26	26	26	26	26	26	26	26	26	26	26	26	26	26	26	26	26	26	26	26	26	26	26	26	26	26	26	26	26	26	26	26	26	26	26	26
				Exposed	26	26	26	26	26	26	26	26	26	26	26	26	26	26	26	26	26	26	26	26	26	26	26	26	26	26	26	26	26	0	26	26	0	26	0	0	26	0	0	26	0	0
		4:12	18.4	Non-Exposed	26	26	26	26	26	26	26	26	26	26	26	26	26	26	26	26	26	26	26	26	26	26	26	26	26	26	26	26	26	26	26	26	26	26	26	26	26	26	26	26	26	26
				Exposed	26	26	26	26	26	26	26	26	26	26	26	26	26	26	26	26	26	26	26	26	26	26	26	26	26	26	26	26	26	0	26	26	0	26	0	0	26	0	0	26	0	0
		5:12	22.6	Non-Exposed	27	27	27	27	27	27	27	27	27	27	27	27	27	27	27	27	27	27	27	27	27	27	27	27	27	27	27	27	27	27	27	27	27	27	27	27	27	27	27	27	27	27
				Exposed	27	27	27	27	27	27	27	27	27	27	27	27	27	27	27	27	27	27	27	27	27	27	27	27	27	27	27	27	27	27	27	27	27	27	0	27	0	0	27	0	0
110		6:12	26.6	Non-Exposed	28	28	28	28	28	28	28	28	28	28	28	28	28	28	28	28	28	28	28	28	28	28	28	28	28	28	28	28	28	28	28	28	28	28	28	28	28	28	28	28	28	28
				Exposed	28	28	28	28	28	28	28	28	28	28	28	28	28	28	28	28	28	28	28	28	28	28	28	28	28	28	28	28	28	28	28	28	28	28	28	28	28	28	0	28	0	0
		7:12	30.3	Non-Exposed	29	29	29	29	29	29	29	29	29	29	29	29	29	29	29	29	29	29	29	29	29	29	29	29	29	29	29	29	29	29	29	29	29	29	29	29	29	29	29	29	29	29
				Exposed	29	29	29	29	29	29	29	29	29	29	29	29	29	29	29	29	29	29	29	29	29	29	29	29	29	29	29	29	29	29	29	29	29	29	29	29	29	29	29	29	29	0
		8:12	33.7	Non-Exposed	30	30	30	30	30	30	30	30	30	30	30	30	30	30	30	30	30	30	30	30	30	30	30	30	30	30	30	30	30	30	30	30	30	30	30	30	30	30	30	30	30	30
				Exposed	30	30	30	30	30	30	30	30	30	30	30	30	30	30	30	30	30	30	30	30	30	30	30	30	30	30	30	30	30	30	30	30	30	30	30	30	30	30	30	30	30	0
		9:12	36.9	Non-Exposed	32	32	32	32	32	32	32	32	32	32	32	32	32	32	32	32	32	32	32	32	32	32	32	32	32	32	32	32	32	32	32	32	32	32	32	32	32	32	32	32	32	32
				Exposed	32	32	32	32	32	32	32	32	32	32	32	32	32	32	32	32	32	32	32	32	32	32	32	32	32	32	32	32	32	32	32	32	32	32	32	32	32	32	32	32	32	0
		10:12	39.8	Non-Exposed	34	34	34	34	34	34	34	34	34	34	34	34	34	34	34	34	34	34	34	34	34	34	34	34	34	34	34	34	34	34	34	34	34	34	34	34	34	34	34	34	34	34
				Exposed	34	34	34	34	34	34	34	34	34	34	34	34	34	34	34	34	34	34	34	34	34	34	34	34	34	34	34	34	34	34	34	34	34	34	34	34	34	34	32	34	34	0
		11:12	42.5	Non-Exposed	35	35	35	35	35	35	35	35	35	35	35	35	35	35	35	35	35	35	35	35	35	35	35	35	35	35	35	35	35	35	35	35	35	35	35	35	35	35	35	35	35	35
				Exposed	35	35	35	35	35	35	35	35	35	35	35	35	35	35	35	35	35	35	35	35	35	35	35	35	35	35	35	35	35	35	35	35	35	35	35	34	35	35	32	35	34	0
		12:12	45	Non-Exposed	38	38	38	38	38	38	38	38	38	38	38	38	38	38	38	38	38	38	38	38	38	38	38	38	38	38	38	38	38	38	38	38	38	38	38	38	37	37	37	37	37	37
				Exposed	38	38	38	38	38	38	38	38	38	38	38	38	38	38	38	38	38	38	38	38	38	38	38	38	38	38	38	38	38	38	38	38	37	38	38	34	37	37	32	37	34	0
	D	Flat	0	Non-Exposed	31	31	31	31	31	31	31	31	31	31	31	31	31	31	31	31	31	31	31	31	31	31	31	31	31	31	31	31	31	31	31	31	31	31	31	31	31	31	31	31	31	0
				Exposed	31	31	31	31	31	31	31	31	31	31	31	31	31	31	31	31	31	31	31	31	31	31	31	31	31	31	31	31	31	31	31	31	0	31	31	0	31	31	0	31	0	0
		1:12	4.8	Non-Exposed	29	29	29	29	29	29	29	29	29	29	29	29	29	29	29	29	29	29	29	29	29	29	29	29	29	29	29	29	29	29	29	29	29	29	29	29	29	29	29	29	29	0
				Exposed	29	29	29	29	29	29	29	29	29	29	29	29	29	29	29	29	29	29	29	29	29	29	29	29	29	29	29	29	29	0	29	29	0	29	29	0	29	0	0	29	0	0
		2:12	9.5	Non-Exposed	27	27	27	27	27	27	27	27	27	27	27	27	27	27	27	27	27	27	27	27	27	27	27	27	27	27	27	27	27	27	27	27	27	27	27	27	27	27	0	27	27	0
				Exposed	27	27	27	27	27	27	27	27	27	27	27	27	27	27	27	27	27	27	27	27	27	27	27	27	27	27	27	27	27	0	27	0	0	27	0	0	27	0	0	27	0	0
		3:12	14.0	Non-Exposed	26	26	26	26	26	26	26	26	26	26	26	26	26	26	26	26	26	26	26	26	26	26	26	26	26	26	26	26	26	26	26	26	26	26	26	26	26	26	0	26	26	0
				Exposed	26	26	26	26	26	26	26	26	26	26	26	26	26	26	26	26	26	26	26	26	26	26	26	26	26	26	26	26	26	0	26	0	0	26	0	0	26	0	0	26	0	0
		4:12	18.4	Non-Exposed	26	26	26	26	26	26	26	26	26	26	26	26	26	26	26	26	26	26	26	26	26	26	26	26	26	26	26	26	26	26	26	26	26	26	26	26	26	26	0	26	26	0
				Exposed	26	26	26	26	26	26	26	26	26	26	26	26	26	26	26	26	26	26	26	26	26	26	26	26	26	26	26	26	26	0	26	0	0	26	0	0	26	0	0	26	0	0
		5:12	22.6	Non-Exposed	27	27	27	27	27	27	27	27	27	27	27	27	27	27	27	27	27	27	27	27	27	27	27	27	27	27	27	27	27	27	27	27	27	27	27	27	27	27	27	27	27	27
				Exposed	27	27	27	27	27	27	27	27	27	27	27	27	27	27	27	27	27	27	27	27	27	27	27	27	27	27	27	27	27	27	27	27	27	27	0	27	0	0	27	0	0
		6:12	26.6	Non-Exposed	28	28	28	28	28	28	28	28	28	28	28	28	28	28	28	28	28	28	28	28	28	28	28	28	28	28	28	28	28	28	28	28	28	28	28	28	28	28	28	28	28	28
				Exposed	28	28	28	28	28	28	28	28	28	28	28	28	28	28	28	28	28	28	28	28	28	28	28	28	28	28	28	28	28	0	28	28	0	28	0	0	28	0	0	28	0	0
		7:12	30.3	Non-Exposed	29	29	29	29	29	29	29	29	29	29	29	29	29	29	29	29	29	29	29	29	29	29	29	29	29	29	29	29	29	29	29	29	29	29	29	29	29	29	29	29	29	29
				Exposed	29	29	29	29	29	29	29	29	29	29	29	29	29	29	29	29	29	29	29	29	29	29	29	29	29	29	29	29	29	29	29	29	29	29	29	29	29	29	0	29	29	0
		8:12	33.7	Non-Exposed	30	30	30	30	30	30	30	30	30	30	30	30	30	30	30	30	30	30	30	30	30	30	30	30	30	30	30	30	30	30	30	30	30	30	30	30	30	30	30	30	30	30
				Exposed	30	30	30	30	30	30	30	30	30	30	30	30	30	30	30	30	30	30	30	30	30	30	30	30	30	30	30	30	30	30	30	30	30	30	30	30	30	30	0	30	30	0
		9:12	36.9	Non-Exposed	32	32	32	32	32	32	32	32	32	32	32	32	32	32	32	32	32	32	32	32	32	32	32	32	32	32	32	32	32	32	32	32	32	32	32	32	32	32	32	32	32	32
				Exposed	32	32	32	32	32	32	32	32	32	32	32	32	32	32	32	32	32	32	32	32	32	32	32	32	32	32	32	32	32	32	32	32	32	32	31	32	32	0	32	32	0
		10:12	39.8	Non-Exposed	34	34	34	34	34	34	34	34	34	34	34	34	34	34	34	34	34	34	34	34	34	34	34	34	34	34	34	34	34	34	34	34	34	34	34	34	34	34	33	33	33
				Exposed	34	34	34	34	34	34	34	34	34	34	34	34	34	34	34	34	34	34	34	34	34	34	34	34	34	34	34	34	34	34	34	34	34	34	31	34	33	0	33	32	0
		11:12	42.5	Non-Exposed	35	35	35	35	35	35	35	35	35	35	35	35	35	35	35	35	35	35	35	35	35	35	35	35	35	35	35	35	35	35	35	35	35	35	35	35	35	34	34	34	34	34
				Exposed	35	35	35	35	35	35	35	35	35	35	35	35	35	35	35	35	35	35	35	35	35	35	35	35	35	35	35	35	35	35	35	35	35	35	31	35	33	0	33	32	0
		12:12	45	Non-Exposed	38	38	38	38	38	38	38	38	38	38	38	38	38	38	38	38	38	38	38	38	38	38	38	38	38	38	38	38	38	38	38	38	38	38	38	38	37	37	36	36	36	35
				Exposed	38	38	38	38	38	38	38	38	38	38	38	38	38	38	38	38	38	38	38	38	38	38	38	38	38	38	38	38	38	36	38	38	34	37	35	31	35	33	0	33	32	0

Tamarack 2.3 Rail – Gable Flush-Mount on 30 Foot Maximum Mean Roof Height – Portrait – Panel Length = 80 Inches or Less

Ground Snow Load	Exposure Category	Roof Pitch	Roof Angle	Wind Speed (mph)	95			100			105			110			115			120			125			130			140			150			160			170			180			190		
				Roof Area	1	2	3	1	2	3	1	2	3	1	2	3	1	2	3	1	2	3	1	2	3	1	2	3	1	2	3	1	2	3	1	2	3	1	2	3	1	2	3	1	2	3
120	B	Flat	0	Non-Exposed	30	30	30	30	30	30	30	30	30	30	30	30	30	30	30	30	30	30	30	30	30	30	30	30	30	30	30	30	30	30	30	30	30	30	30	30	30	30	30	30	30	30
				Exposed	30	30	30	30	30	30	30	30	30	30	30	30	30	30	30	30	30	30	30	30	30	30	30	30	30	30	30	30	30	30	30	30	30	30	30	30	30	30	30	30	30	30
		1:12	4.8	Non-Exposed	28	28	28	28	28	28	28	28	28	28	28	28	28	28	28	28	28	28	28	28	28	28	28	28	28	28	28	28	28	28	28	28	28	28	28	28	28	28	28	28	28	28
				Exposed	28	28	28	28	28	28	28	28	28	28	28	28	28	28	28	28	28	28	28	28	28	28	28	28	28	28	28	28	28	28	28	28	28	28	28	28	28	28	28	28	28	28
		2:12	9.5	Non-Exposed	26	26	26	26	26	26	26	26	26	26	26	26	26	26	26	26	26	26	26	26	26	26	26	26	26	26	26	26	26	26	26	26	26	26	26	26	26	26	26	26	26	26
				Exposed	26	26	26	26	26	26	26	26	26	26	26	26	26	26	26	26	26	26	26	26	26	26	26	26	26	26	26	26	26	26	26	26	26	26	26	26	26	26	26	26	26	0
		3:12	14.0	Non-Exposed	25	25	25	25	25	25	25	25	25	25	25	25	25	25	25	25	25	25	25	25	25	25	25	25	25	25	25	25	25	25	25	25	25	25	25	25	25	25	25	25	25	25
				Exposed	25	25	25	25	25	25	25	25	25	25	25	25	25	25	25	25	25	25	25	25	25	25	25	25	25	25	25	25	25	25	25	25	25	25	25	25	25	25	25	25	25	0
		4:12	18.4	Non-Exposed	25	25	25	25	25	25	25	25	25	25	25	25	25	25	25	25	25	25	25	25	25	25	25	25	25	25	25	25	25	25	25	25	25	25	25	25	25	25	25	25	25	25
				Exposed	25	25	25	25	25	25	25	25	25	25	25	25	25	25	25	25	25	25	25	25	25	25	25	25	25	25	25	25	25	25	25	25	25	25	25	25	25	25	25	25	25	0
		5:12	22.6	Non-Exposed	26	26	26	26	26	26	26	26	26	26	26	26	26	26	26	26	26	26	26	26	26	26	26	26	26	26	26	26	26	26	26	26	26	26	26	26	26	26	26	26	26	26
				Exposed	26	26	26	26	26	26	26	26	26	26	26	26	26	26	26	26	26	26	26	26	26	26	26	26	26	26	26	26	26	26	26	26	26	26	26	26	26	26	26	26	26	26
		6:12	26.6	Non-Exposed	26	26	26	26	26	26	26	26	26	26	26	26	26	26	26	26	26	26	26	26	26	26	26	26	26	26	26	26	26	26	26	26	26	26	26	26	26	26	26	26	26	26
				Exposed	26	26	26	26	26	26	26	26	26	26	26	26	26	26	26	26	26	26	26	26	26	26	26	26	26	26	26	26	26	26	26	26	26	26	26	26	26	26	26	26	26	0
		7:12	30.3	Non-Exposed	28	28	28	28	28	28	28	28	28	28	28	28	28	28	28	28	28	28	28	28	28	28	28	28	28	28	28	28	28	28	28	28	28	28	28	28	28	28	28	28	28	28
				Exposed	28	28	28	28	28	28	28	28	28	28	28	28	28	28	28	28	28	28	28	28	28	28	28	28	28	28	28	28	28	28	28	28	28	28	28	28	28	28	28	28	28	0
		8:12	33.7	Non-Exposed	29	29	29	29	29	29	29	29	29	29	29	29	29	29	29	29	29	29	29	29	29	29	29	29	29	29	29	29	29	29	29	29	29	29	29	29	29	29	29	29	29	29
				Exposed	29	29	29	29	29	29	29	29	29	29	29	29	29	29	29	29	29	29	29	29	29	29	29	29	29	29	29	29	29	29	29	29	29	29	29	29	29	29	29	29	29	29
		9:12	36.9	Non-Exposed	30	30	30	30	30	30	30	30	30	30	30	30	30	30	30	30	30	30	30	30	30	30	30	30	30	30	30	30	30	30	30	30	30	30	30	30	30	30	30	30	30	30
				Exposed	30	30	30	30	30	30	30	30	30	30	30	30	30	30	30	30	30	30	30	30	30	30	30	30	30	30	30	30	30	30	30	30	30	30	30	30	30	30	30	30	30	0
		10:12	39.8	Non-Exposed	32	32	32	32	32	32	32	32	32	32	32	32	32	32	32	32	32	32	32	32	32	32	32	32	32	32	32	32	32	32	32	32	32	32	32	32	32	32	32	32	32	32
				Exposed	32	32	32	32	32	32	32	32	32	32	32	32	32	32	32	32	32	32	32	32	32	32	32	32	32	32	32	32	32	32	32	32	32	32	32	32	32	32	32	32	32	0
		11:12	42.5	Non-Exposed	34	34	34	34	34	34	34	34	34	34	34	34	34	34	34	34	34	34	34	34	34	34	34	34	34	34	34	34	34	34	34	34	34	34	34	34	34	34	34	34	34	34
				Exposed	34	34	34	34	34	34	34	34	34	34	34	34	34	34	34	34	34	34	34	34	34	34	34	34	34	34	34	34	34	34	34	34	34	34	34	34	34	34	34	34	34	0
		12:12	45	Non-Exposed	36	36	36	36	36	36	36	36	36	36	36	36	36	36	36	36	36	36	36	36	36	36	36	36	36	36	36	36	36	36	36	36	36	36	36	36	36	36	36	36	36	36
				Exposed	36	36	36	36	36	36	36	36	36	36	36	36	36	36	36	36	36	36	36	36	36	36	36	36	36	36	36	36	36	36	36	36	36	36	36	36	36	36	36	36	36	36
	C	Flat	0	Non-Exposed	30	30	30	30	30	30	30	30	30	30	30	30	30	30	30	30	30	30	30	30	30	30	30	30	30	30	30	30	30	30	30	30	30	30	30	30	30	30	30	30	30	30
				Exposed	30	30	30	30	30	30	30	30	30	30	30	30	30	30	30	30	30	30	30	30	30	30	30	30	30	30	30	30	30	30	30	30	30	30	30	0	30	30	0	30	30	0
		1:12	4.8	Non-Exposed	28	28	28	28	28	28	28	28	28	28	28	28	28	28	28	28	28	28	28	28	28	28	28	28	28	28	28	28	28	28	28	28	28	28	28	28	28	28	28	28	28	28
				Exposed	28	28	28	28	28	28	28	28	28	28	28	28	28	28	28	28	28	28	28	28	28	28	28	28	28	28	28	28	28	28	28	28	28	28	28	0	28	28	0	28	28	0
		2:12	9.5	Non-Exposed	26	26	26	26	26	26	26	26	26	26	26	26	26	26	26	26	26	26	26	26	26	26	26	26	26	26	26	26	26	26	26	26	26	26	26	26	26	26	26	26	26	26
				Exposed	26	26	26	26	26	26	26	26	26	26	26	26	26	26	26	26	26	26	26	26	26	26	26	26	26	26	0	26	26	0	26	0	0	26	0	0	26	0	0	26	0	0
		3:12	14.0	Non-Exposed	25	25	25	25	25	25	25	25	25	25	25	25	25	25	25	25	25	25	25	25	25	25	25	25	25	25	25	25	25	25	25	25	25	25	25	25	25	25	25	25	25	25
				Exposed	25	25	25	25	25	25	25	25	25	25	25	25	25	25	25	25	25	25	25	25	25	25	25	25	25	25	0	25	25	0	25	0	0	25	0	0	25	0	0	25	0	0
		4:12	18.4	Non-Exposed	25	25	25	25	25	25	25	25	25	25	25	25	25	25	25	25	25	25	25	25	25	25	25	25	25	25	25	25	25	25	25	25	25	25	25	25	25	25	25	25	25	25
				Exposed	25	25	25	25	25	25	25	25	25	25	25	25	25	25	25	25	25	25	25	25	25	25	25	25	25	25	0	25	25	0	25	0	0	25	0	0	25	0	0	25	0	0
		5:12	22.6	Non-Exposed	26	26	26	26	26	26	26	26	26	26	26	26	26	26	26	26	26	26	26	26	26	26	26	26	26	26	26	26	26	26	26	26	26	26	26	26	26	26	26	26	26	26
				Exposed	26	26	26	26	26	26	26	26	26	26	26	26	26	26	26	26	26	26	26	26	26	26	26	26	26	26	26	26	26	26	26	26	26	26	26	0	26	0	0	26	0	0
		6:12	26.6	Non-Exposed	26	26	26	26	26	26	26	26	26	26	26	26	26	26	26	26	26	26	26	26	26	26	26	26	26	26	26	26	26	26	26	26	26	26	26	26	26	26	26	26	26	26
				Exposed	26	26	26	26	26	26	26	26	26	26	26	26	26	26	26	26	26	26	26	26	26	26	26	26	26	26	26	26	26	26	26	26	26	26	26	0	26	0	0	26	0	0
		7:12	30.3	Non-Exposed	28	28	28	28	28	28	28	28	28	28	28	28	28	28	28	28	28	28	28	28	28	28	28	28	28	28	28	28	28	28	28	28	28	28	28	28	28	28	28	28	28	28
				Exposed	28	28	28	28	28	28	28	28	28	28	28	28	28	28	28	28	28	28	28	28	28	28	28	28	28	28	28	28	28	28	28	28	28	28	28	28	28	28	28	28	28	0
		8:12	33.7	Non-Exposed	29	29	29	29	29	29	29	29	29	29	29	29	29	29	29	29	29	29	29	29	29	29	29	29	29	29	29	29	29	29	29	29	29	29	29	29	29	29	29	29	29	29
				Exposed	29	29	29	29	29	29	29	29	29	29	29	29	29	29	29	29	29	29	29	29	29	29	29	29	29	29	29	29	29	29	29	29	29	29	29	29	29	29	29	29	29	0
		9:12	36.9	Non-Exposed	30	30	30	30	30	30	30	30	30	30	30	30	30	30	30	30	30	30	30	30	30	30	30	30	30	30	30	30	30	30	30	30	30	30	30	30	30	30	30	30	30	30
				Exposed	30	30	30	30	30	30	30	30	30	30	30	30	30	30	30	30	30	30	30	30	30	30	30	30	30	30	30	30	30	30	30	30	30	30	30	30	30	30	30	30	30	0
		10:12	39.8	Non-Exposed	32	32	32	32	32	32	32	32	32	32	32	32	32	32	32	32	32	32	32	32	32	32	32	32	32	32	32	32	32	32	32	32	32	32	32	32	32	32	32	32	32	32
				Exposed	32	32	32	32	32	32	32	32	32	32	32	32	32	32	32	32	32	32	32	32	32	32	32	32	32	32	32	32	32	32	32	32	32	32	32	32	32	32	32	32	32	0
		11:12	42.5	Non-Exposed	34	34	34	34	34	34	34	34	34	34	34	34	34	34	34	34	34	34	34	34	34	34	34	34	34	34	34	34	34	34	34	34	34	34	34	34	34	34	34	34	34	34
				Exposed	34	34	34	34	34	34	34	34	34	34	34	34	34	34	34	34	34	34	34	34	34	34	34	34	34	34	34	34	34	34	34	34	34	34	34	34	34	34	32	34	34	0
		12:12	45	Non-Exposed	36	36	36	36	36	36	36	36	36	36	36	36	36	36	36	36	36	36	36	36	36	36	36	36	36	36	36	36	36	36	36	36	36	36	36	36	36	36	36	36	36	36
				Exposed	36	36	36	36	36	36	36	36	36	36	36	36	36	36	36	36	36	36	36	36	36	36	36	36	36	36	36	36	36	36	36	36	34	36	36	36	36	36	32	36	34	0
	D	Flat	0	Non-Exposed	30	30	30	30	30	30	30	30	30	30	30	30	30	30	30	30	30	30	30	30	30	30	30	30	30	30	30	30	30	30	30	30	30	30	30	30	30	30	30	30	30	0
				Exposed	30	30	30	30	30	30	30	30	30	30	30	30	30	30	30	30	30	30	30	30	30	30	30	30	30	30	30	30	30	30	30	0	30	30	0	30	30	0	30	0	0
		1:12	4.8	Non-Exposed	28	28	28	28	28	28	28	28	28	28	28	28	28	28	28	28	28	28	28	28	28	28	28	28	28	28	28	28	28	28	28	28	28	28	28	28	28	28	28	28	28	0
				Exposed	28	28	28	28	28	28	28	28	28	28	28	28	28	28	28	28	28	28	28	28	28	28	28	28	28	28	0	28	28	0	28	0	0	28	0	0	28	0	0	28	0	0
		2:12	9.5	Non-Exposed	26	26	26	26	26	26	26	26	26	26	26	26	26	26	26	26	26	26	26	26	26	26	26	26	26	26	26	26	26	26	26	26	26	26	26	26	26	26	0	26	26	0
				Exposed	26	26	26	26	26	26	26	26	26	26	26	26	26	26	26	26	26	26	26	26	26	26	26	26	26	26	0	26	0	0	26	0	0	26	0	0	26	0	0	26	0	0
		3:12	14.0	Non-Exposed	25	25	25	25	25	25	25	25	25	25	25	25	25	25	25	25	25	25	25	25	25	25	25	25	25	25	25	25	25	25	25	25	25	25	25	25	25	25	0	25	25	0
				Exposed	25	25	25	25	25	25	25	25	25	25	25	25	25	25	25	25	25	25	25	25	25	25	25	25	25	25	0	25	0	0	25	0	0	25	0	0	25	0	0	25	0	0
		4:12	18.4	Non-Exposed	25	25	25	25	25	25	25	25	25	25	25	25	25	25	25	25	25	25	25	25	25	25	25	25	25	25	25	25	25	25	25	25	25	25	25	25	25	25	0	25	25	0
				Exposed	25	25	25	25	25	25	25	25	25	25	25	25	25	25	25	25	25	25	25	25	25	25	25	25	25	25	0	25	0	0	25	0	0	25	0	0	25	0	0	25	0	0
		5:12	22.6	Non-Exposed	26	26	26	26	26	26	26	26	26	26	26	26	26	26	26	26	26	26	26	26	26	26	26	26	26	26	26	26	26	26	26	26	26	26	26	26	26	26	26	26	26	26
				Exposed	26	26	26	26	26	26	26	26	26	26	26	26	26	26	26	26	26	26	26	26	26	26	26	26	26	26	26	26	26	26	26	26	26	26	26	0	26	0	0	26	0	0
		6:12	26.6	Non-Exposed	26	26	26	26	26	26	26	26	26	26	26	26	26	26	26	26	26	26	26	26	26	26	26	26	26	26	26	26	26	26	26	26	26	26	26	26	26	26	26	26	26	26
				Exposed	26	26	26	26	26	26	26	26	26	26	26	26	26	26	26	26	26	26	26	26	26	26	26	26	26	26	0	26	26	0	26	0	0	26	0	0	26	0	0	26	0	0
		7:12	30.3	Non-Exposed	28	28	28	28	28	28	28	28	28	28	28	28	28	28	28	28	28	28	28	28	28	28	28	28	28	28	28	28	28	28	28	28	28	28	28	28	28	28	28	28	28	28
				Exposed	28	28	28	28	28	28	28	28	28	28	28	28	28	28	28	28	28	28	28	28	28	28	28	28	28	28	28	28	28	28	28	28	28	28	28	28	28	28	0	28	28	0
		8:12	33.7	Non-Exposed	29	29	29	29	29	29	29	29	29	29	29	29	29	29	29	29	29	29	29	29	29	29	29	29	29	29	29	29	29	29	29	29	29	29	29	29	29	29	29	29	29	29
				Exposed	29	29	29	29	29	29	29	29	29	29	29	29	29	29	29	29	29	29	29	29	29	29	29	29	29	29	29	29	29	29	29	29	29	29	29	29	29	29	0	29	29	0
		9:12	36.9	Non-Exposed	30	30	30	30	30	30	30	30	30	30	30	30	30	30	30	30	30	30	30	30	30	30	30	30	30	30	30	30	30	30	30	30	30	30	30	30	30	30	30	30	30	30
				Exposed	30	30	30	30	30	30	30	30	30	30	30	30	30	30	30	30	30	30	30	30	30	30	30	30	30	30	30	30	30	30	30	30	30	30	30	30	30	30	0	30	30	0
		10:12	39.8	Non-Exposed	32	32	32	32	32	32	32	32	32	32	32	32	32	32	32	32	32	32	32	32	32	32	32	32	32	32	32	32	32	32	32	32	32	32	32	32	32	32	32	32	32	32
				Exposed	32	32	32	32	32	32	32	32	32	32	32	32	32	32	32	32	32	32	32	32	32	32	32	32	32	32	32	32	32	32	32	32	31	32	32	0	32	32	0	32	32	0
		11:12	42.5	Non-Exposed	34	34	34	34	34	34	34	34	34	34	34	34	34	34	34	34	34	34	34	34	34	34	34	34	34	34	34	34	34	34	34	34	34	34	34	34	34	34	33	33	33	33
				Exposed	34	34	34	34	34	34	34	34	34	34	34	34	34	34	34	34	34	34	34	34	34	34	34	34	34	34	34	34	34	34	34	31	34	34	0	33	32	0	33	32	0
		12:12	45	Non-Exposed	36	36	36	36	36	36	36	36	36	36	36	36	36	36	36	36	36	36	36	36	36	36	36	36	36	36	36	36	36	36	36	36	36	36	36	36	36	36	35	35	35	35
				Exposed	36	36	36	36	36	36	36	36	36	36	36	36	36	36	36	36	36	36	36	36	36	36	36	36	36	36	36	36	36	36	36	34	36	35	31	35	33	0	33	32	0

Tamarack 2.3 Rail – Hip Flush-Mount on 30 Foot Maximum Mean Roof Height – Portrait – Panel Length = 80 Inches or Less

Ground Snow Load	Exposure Category	Roof Pitch	Roof Angle	Wind Speed (mph)	95			100			105			110			115			120			125			130			140			150			160			170			180			190		
				Roof Area	1	2	3	1	2	3	1	2	3	1	2	3	1	2	3	1	2	3	1	2	3	1	2	3	1	2	3	1	2	3	1	2	3	1	2	3	1	2	3	1	2	3
0	B	2:12	9.5	Non-Exposed	87	87	87	87	87	87	87	87	87	87	87	87	87	87	87	87	87	84	87	84	80	87	80	76	82	72	69	74	66	63	68	61	58	64	56	54	60	52	50	56	49	47
				Exposed	87	87	87	87	86	82	87	81	77	87	76	72	81	72	68	76	68	64	72	64	61	69	61	58	63	56	53	58	51	49	54	47	45	51	44	42	47	41	39	45	38	36
		3:12	14.0	Non-Exposed	86	86	86	86	86	86	86	86	86	86	86	86	86	86	86	86	86	83	86	83	79	86	79	75	81	72	68	74	66	63	68	61	58	63	56	53	59	52	50	56	49	47
				Exposed	86	86	86	86	85	81	86	80	76	86	75	72	81	71	68	76	67	64	72	64	61	68	61	58	63	56	53	58	51	48	54	47	45	50	44	42	47	41	39	44	38	36
		4:12	18.4	Non-Exposed	85	85	85	85	85	85	85	85	85	85	85	85	85	85	85	85	85	83	85	82	78	85	78	75	81	71	68	73	65	62	68	60	57	63	56	53	59	52	50	56	49	46
				Exposed	85	85	85	85	85	80	85	80	76	85	75	71	80	71	67	75	67	64	71	64	61	68	61	58	63	55	53	58	51	48	54	47	45	50	44	41	47	41	39	44	38	36
		5:12	22.6	Non-Exposed	84	84		84	84		84	84		84	84		84	84		84	84		84	84		84	84		84	80		84	73		84	68		80	63		74	58		69	55	
				Exposed	84	84		84	84		84	84		84	84		84	80		84	75		84	72		84	68		79	62		72	57		66	53		61	49		57	45		53	42	
		6:12	26.6	Non-Exposed	84	84		84	84		84	84		84	84		84	84		84	84		84	84		84	84		84	80		84	73		84	67		79	62		73	58		68	54	
				Exposed	84	84		84	84		84	84		84	84		84	79		84	75		84	71		84	68		78	62		71	57		66	52		61	49		57	45		53	42	
		7:12	30.3	Non-Exposed	83	83	83	83	83	83	83	83	83	83	83	83	83	83	83	83	83	83	83	83	83	83	79	82	83	71	73	83	65	65	81	60	59	75	55	54	70	51	50	65	47	46
				Exposed	83	83	83	83	83	83	83	80	83	83	75	78	83	71	72	83	67	67	83	63	63	81	60	60	74	54	53	68	50	48	63	46	44	58	42	40	54	39	37	51	36	34
		8:12	33.7	Non-Exposed	83	83	83	83	83	83	83	83	83	83	83	83	83	83	83	83	83	83	83	83	83	83	78	82	83	71	72	83	65	65	80	59	59	74	55	54	69	51	49	65	47	46
				Exposed	83	83	83	83	83	83	83	79	83	83	75	77	83	70	72	83	66	67	83	63	63	81	60	59	74	54	53	67	50	48	62	46	44	58	42	40	54	39	37	50	36	34
		9:12	36.9	Non-Exposed	82	82	82	82	82	82	82	82	82	82	82	82	82	82	82	82	82	82	82	82	82	82	78	81	82	71	72	82	64	65	80	59	59	74	55	54	69	51	49	64	47	46
				Exposed	82	82	82	82	82	82	82	79	82	82	74	76	82	70	71	82	66	67	82	63	63	80	60	59	73	54	53	67	49	48	62	45	44	58	42	40	54	39	37	50	36	34
		10:12	39.8	Non-Exposed	82	82	82	82	82	82	82	82	82	82	82	82	82	82	82	82	82	82	82	82	82	82	77	80	82	70	72	82	64	64	79	59	58	74	55	53	69	51	49	64	47	45
				Exposed	82	82	82	82	82	82	82	79	82	82	74	76	82	70	71	82	66	66	82	62	62	80	59	59	73	54	53	67	49	48	62	45	43	57	42	40	54	39	37	50	36	34
		11:12	42.5	Non-Exposed	82	82	82	82	82	82	82	82	82	82	82	82	82	82	82	82	82	82	82	81	82	82	77	80	82	70	71	82	64	64	79	59	58	73	54	53	68	50	49	64	47	45
				Exposed	82	82	82	82	82	82	82	78	81	82	74	76	82	69	71	82	66	66	82	62	62	79	59	59	72	54	53	67	49	48	62	45	43	57	42	40	53	39	37	50	36	34
		12:12	45	Non-Exposed	81	81	81	81	81	81	81	81	81	81	81	81	81	81	81	81	81	81	81	81	81	81	77	79	81	70	71	81	64	64	78	59	58	73	54	53	68	50	49	64	47	45
				Exposed	81	81	81	81	81	81	81	78	81	81	73	75	81	69	70	81	65	66	81	62	62	79	59	58	72	54	52	66	49	48	62	45	43	57	42	40	53	39	37	50	36	34
	C	2:12	9.5	Non-Exposed	87	87	87	87	87	86	87	85	80	87	79	75	85	75	71	80	71	67	76	67	64	72	64	61	66	58	55	61	53	51	56	49	47	52	46	43	49	42	40	46	40	38
				Exposed	84	74	70	78	69	66	73	65	62	69	61	58	65	58	55	62	55	52	59	52	49	57	49	47	52	45	43	48	41	39	45	38	36	42	36	34	39	33	32	37	32	0
		3:12	14.0	Non-Exposed	86	86	86	86	86	85	86	84	80	86	79	75	84	74	71	80	70	67	75	67	64	71	64	60	65	58	55	60	53	51	56	49	47	52	45	43	49	42	40	46	40	38
				Exposed	83	73	70	77	69	65	72	64	61	68	61	58	65	57	55	62	55	52	59	52	49	56	49	47	52	45	43	48	41	39	45	38	36	42	35	34	39	33	32	37	32	0
		4:12	18.4	Non-Exposed	85	85	85	85	85	84	85	83	79	85	78	74	84	74	70	79	70	67	75	67	63	71	63	60	65	58	55	60	53	50	56	49	47	52	45	43	49	42	40	46	40	38
				Exposed	82	73	69	77	68	65	72	64	61	68	61	58	65	57	54	62	54	52	59	52	49	56	49	47	52	45	43	48	41	39	44	38	36	42	35	34	39	33	32	37	32	0
		5:12	22.6	Non-Exposed	84	84		84	84		84	84		84	84		84	83		84	79		84	75		84	71		82	65		75	59		69	55		64	51		59	47		56	44	
				Exposed	84	82		84	77		84	72		84	68		82	64		77	61		73	58		70	55		63	50		58	46		53	43		49	40		46	37		43	35	
		6:12	26.6	Non-Exposed	84	84		84	84		84	84		84	84		84	82		84	78		84	74		84	71		82	64		75	59		69	55		64	51		59	47		55	44	
				Exposed	84	81		84	76		84	72		84	68		81	64		77	61		73	58		69	55		63	50		58	46		53	43		49	39		46	37		43	35	
		7:12	30.3	Non-Exposed	83	83	83	83	83	83	83	83	83	83	79	82	83	74	76	83	70	71	83	66	67	83	63	63	77	57	56	71	52	51	65	48	46	61	44	42	56	41	39	53	38	36
				Exposed	83	73	75	83	68	69	83	64	64	81	60	59	77	56	56	73	53	52	69	51	49	66	48	46	60	44	42	55	40	38	51	37	34	47	34	32	44	32	0	41	0	0
		8:12	33.7	Non-Exposed	83	83	83	83	83	83	83	83	83	83	78	81	83	74	76	83	70	71	83	66	66	83	63	62	77	57	56	70	52	50	65	48	46	60	44	42	56	41	39	53	38	36
				Exposed	83	72	74	83	68	69	83	63	64	80	60	59	76	56	55	72	53	52	69	50	49	65	48	46	60	43	41	55	40	38	51	37	34	47	34	32	44	32	0	41	0	0
		9:12	36.9	Non-Exposed	82	82	82	82	82	82	82	82	82	82	78	81	82	73	75	82	69	70	82	66	66	82	62	62	76	56	56	70	52	50	65	47	46	60	44	42	56	41	39	52	38	36
				Exposed	82	72	74	82	67	68	82	63	63	80	59	59	76	56	55	72	53	52	68	50	49	65	48	46	59	43	41	55	40	38	50	37	34	47	34	32	44	32	0	41	0	0
		10:12	39.8	Non-Exposed	82	82	82	82	82	82	82	82	82	82	77	80	82	73	75	82	69	70	82	65	66	82	62	62	76	56	55	70	51	50	64	47	46	60	44	42	56	41	39	52	38	36
				Exposed	82	72	73	82	67	68	82	63	63	79	59	59	75	56	55	72	53	52	68	50	49	65	48	46	59	43	41	54	40	37	50	36	34	47	34	32	44	32	0	41	0	0
		11:12	42.5	Non-Exposed	82	82	82	82	82	82	82	82	82	82	77	80	82	73	74	82	69	70	82	65	65	82	62	62	76	56	55	69	51	50	64	47	46	60	44	42	56	41	39	52	38	36
				Exposed	82	71	73	82	67	67	82	63	63	79	59	59	75	56	55	71	53	51	68	50	49	65	48	46	59	43	41	54	40	37	50	36	34	47	34	32	44	32	0	41	0	0
		12:12	45	Non-Exposed	81	81	81	81	81	81	81	81	81	81	76	79	81	72	74	81	68	69	81	65	65	81	62	61	75	56	55	69	51	50	64	47	45	60	44	42	56	41	38	52	38	36
				Exposed	81	71	73	81	67	67	81	63	62	79	59	58	75	56	55	71	53	51	68	50	48	64	47	46	59	43	41	54	40	37	50	36	34	47	34	32	44	32	0	41	0	0
	D	2:12	9.5	Non-Exposed	87	86	82	87	81	77	86	76	72	81	71	68	76	67	64	71	64	60	68	60	57	65	57	55	60	52	50	55	48	46	51	44	42	48	41	39	45	38	36	42	36	34
				Exposed	74	66	63	70	62	59	66	58	55	62	55	52	59	52	49	56	49	47	54	47	45	51	45	42	47	41	39	44	37	36	41	35	33	38	33	31	36	0	0	34	0	0
		3:12	14.0	Non-Exposed	86	86	81	86	80	76	85	75	71	80	71	67	75	67	64	71	63	60	68	60	57	65	57	54	59	52	50	55	48	46	51	44	42	48	41	39	45	38	36	42	36	34
				Exposed	74	66	63	69	62	59	65	58	55	62	55	52	59	52	49	56	49	47	54	47	44	51	44	42	47	41	39	44	37	36	41	35	33	38	33	31	36	0	0	34	0	0
		4:12	18.4	Non-Exposed	85	85	81	85	79	75	84	75	71	79	70	67	75	66	63	70	63	60	67	60	57	64	57	54	59	52	49	55	48	45	51	44	42	47	41	39	45	38	36	42	36	34
				Exposed	73	65	62	69	61	58	65	58	55	62	55	52	59	52	49	56	49	47	53	47	44	51	44	42	47	41	39	44	37	35	40	35	33	38	32	0	35	0	0	34	0	0
		5:12	22.6	Non-Exposed	84	84		84	84		84	84		84	79		84	75		84	71		84	67		81	64		74	58		67	53		62	49		57	46		53	43		50	40	
				Exposed	84	74		84	69		82	65		77	61		73	58		69	55		66	52		62	50		57	45		52	42		48	38		45	36		41	34		39	32	
		6:12	26.6	Non-Exposed	84	84		84	84		84	83		84	78		84	74		84	70		84	67		80	64		73	58		67	53		62	49		57	46		53	43		50	40	
				Exposed	84	73		84	69		82	64		77	61		73	58		69	55		65	52		62	49		57	45		52	42		48	38		44	36		41	34		39	32	
		7:12	30.3	Non-Exposed	83	83	83	83	80	83	83	75	77	83	70	72	83	66	67	83	62	62	80	59	59	76	56	55	69	51	49	64	46	45	59	43	41	55	39	37	51	37	35	48	34	32
				Exposed	83	65	65	82	61	60	77	57	56	73	54	52	69	50	49	65	48	46	62	45	43	59	43	41	54	39	37	50	36	34	46	33	31	42	31	0	40	0	0	37	0	0
		8:12	33.7	Non-Exposed	83	83	83	83	79	83	83	74	77	83	70	71	83	66	66	83	62	62	79	59	58	76	56	55	69	51	49	63	46	45	59	43	41	54	39	37	51	37	34	47	34	32
				Exposed	83	65	65	82	61	60	77	57	56	72	53	52	69	50	49	65	48	46	62	45	43	59	43	41	54	39	37	49	36	34	46	33	31	42	31	0	40	0	0	37	0	0
		9:12	36.9	Non-Exposed	82	82	82	82	79	82	82	74	76	82	69	71	82	65	66	82	62	62	79	59	58	75	56	55	69	51	49	63	46	44	58	43	41	54	39	37	51	37	34	47	34	32
				Exposed	82	64	65	81	60	60	76	57	56	72	53	52	68	50	49	65	48	46	62	45	43	59	43	41	54	39	37	49	36	34	46	33	31	42	31	0	39	0	0	37	0	0
		10:12	39.8	Non-Exposed	82	82	82	82	78	82	82	73	75	82	69	70	82	65	66	82	62	62	79	59	58	75	56	55	68	50	49	63	46	44	58	42	40	54	39	37	50	37	34	47	34	32
				Exposed	82	64	64	81	60	60	76	56	56	72	53	52	68	50	49	65	47	46	61	45	43	59	43	41	53	39	37	49	36	34	45	33	31	42	31	0	39	0	0	37	0	0
		11:12	42.5	Non-Exposed	82	82	82	82	78	81	82	73	75	82	69	70	82	65	65	82	62	61	78	58	58	75	55	54	68	50	49	63	46	44	58	42	40	54	39	37	50	36	34	47	34	32
				Exposed	82	64	64	80	60	59	76	56	55	71	53	52	68	50	48	64	47	46	61	45	43	58	43	41	53	39	37	49	36	33	45	33	31	42	31	0	39	0	0	37	0	0
		12:12	45	Non-Exposed	81	81	81	81	78	80	81	73	75	81	69	70	81	65	65	81	61	61	78	58	58	74	55	54	68	50	49	63	46	44	58	42	40	54	39	37	50	36	34	47	34	32
				Exposed	81	64	64	80	60	59	75	56	55	71	53	52	68	50	48	64	47	46	61	45	43	58	43	41	53	39	37	49	35	33	45	33	31	42	31	0	39	0	0	37	0	0

Tamarack 2.3 Rail – Hip Flush-Mount on 30 Foot Maximum Mean Roof Height – Portrait – Panel Length = 80 Inches or Less

Ground Snow Load	Exposure Category	Roof Pitch	Roof Angle	Wind Speed (mph)	95			100			105			110			115			120			125			130			140			150			160			170			180			190		
				Roof Area	1	2	3	1	2	3	1	2	3	1	2	3	1	2	3	1	2	3	1	2	3	1	2	3	1	2	3	1	2	3	1	2	3	1	2	3	1	2	3	1	2	3
5	B	2:12	9.5	Non-Exposed	80	80	80	80	80	80	80	80	80	80	80	80	80	80	80	80	80	80	80	80	80	80	80	76	80	72	69	74	66	63	68	61	58	64	56	54	60	52	50	56	49	47
				Exposed	80	80	80	80	80	80	80	80	77	80	76	72	80	72	68	76	68	64	72	64	61	69	61	58	63	56	53	58	51	49	54	47	45	51	44	42	47	41	39	45	38	36
		3:12	14.0	Non-Exposed	78	78	78	78	78	78	78	78	78	78	78	78	78	78	78	78	78	78	78	78	78	78	78	75	78	72	68	74	66	63	68	61	58	63	56	53	59	52	50	56	49	47
				Exposed	78	78	78	78	78	78	78	78	76	78	75	72	78	71	68	76	67	64	72	64	61	68	61	58	63	56	53	58	51	48	54	47	45	50	44	42	47	41	39	44	38	36
		4:12	18.4	Non-Exposed	80	80	80	80	80	80	80	80	80	80	80	80	80	80	80	80	80	80	80	80	78	80	78	75	80	71	68	73	65	62	68	60	57	63	56	53	59	52	50	56	49	46
				Exposed	80	80	80	80	80	80	80	80	76	80	75	71	80	71	67	75	67	64	71	64	61	68	61	58	63	55	53	58	51	48	54	47	45	50	44	41	47	41	39	44	38	36
		5:12	22.6	Non-Exposed	79	79		79	79		79	79		79	79		79	79		79	79		79	79		79	79		79	79		79	73		79	68		79	63		74	58		69	55	
				Exposed	79	79		79	79		79	79		79	79		79	79		79	75		79	72		79	68		79	62		72	57		66	53		61	49		57	45		53	42	
		6:12	26.6	Non-Exposed	80	80		80	80		80	80		80	80		80	80		80	80		80	80		80	80		80	80		80	73		80	67		79	62		73	58		68	54	
				Exposed	80	80		80	80		80	80		80	80		80	79		80	75		80	71		80	68		78	62		71	57		66	52		61	49		57	45		53	42	
		7:12	30.3	Non-Exposed	80	80	80	80	80	80	80	80	80	80	80	80	80	80	80	80	80	80	80	80	80	80	79	80	80	71	73	80	65	65	80	60	59	75	55	54	70	51	50	65	47	46
				Exposed	80	80	80	80	80	80	80	80	80	80	75	78	80	71	72	80	67	67	80	63	63	80	60	60	74	54	53	68	50	48	63	46	44	58	42	40	54	39	37	51	36	34
		8:12	33.7	Non-Exposed	80	80	80	80	80	80	80	80	80	80	80	80	80	80	80	80	80	80	80	80	80	80	78	80	80	71	72	80	65	65	80	59	59	74	55	54	69	51	49	65	47	46
				Exposed	80	80	80	80	80	80	80	79	80	80	75	77	80	70	72	80	66	67	80	63	63	80	60	59	74	54	53	67	50	48	62	46	44	58	42	40	54	39	37	50	36	34
		9:12	36.9	Non-Exposed	81	81	81	81	81	81	81	81	81	81	81	81	81	81	81	81	81	81	81	81	81	81	78	81	81	71	72	81	64	65	80	59	59	74	55	54	69	51	49	64	47	46
				Exposed	81	81	81	81	81	81	81	79	81	81	74	76	81	70	71	81	66	67	81	63	63	80	60	59	73	54	53	67	49	48	62	45	44	58	42	40	54	39	37	50	36	34
		10:12	39.8	Non-Exposed	81	81	81	81	81	81	81	81	81	81	81	81	81	81	81	81	81	81	81	81	81	81	77	80	81	70	72	81	64	64	79	59	58	74	55	53	69	51	49	64	47	45
				Exposed	81	81	81	81	81	81	81	79	81	81	74	76	81	70	71	81	66	66	81	62	62	80	59	59	73	54	53	67	49	48	62	45	43	57	42	40	54	39	37	50	36	34
		11:12	42.5	Non-Exposed	82	82	82	82	82	82	82	82	82	82	82	82	82	82	82	82	82	82	82	81	82	82	77	80	82	70	71	82	64	64	79	59	58	73	54	53	68	50	49	64	47	45
				Exposed	82	82	82	82	82	82	82	78	81	82	74	76	82	69	71	82	66	66	82	62	62	79	59	59	72	54	53	67	49	48	62	45	43	57	42	40	53	39	37	50	36	34
		12:12	45	Non-Exposed	81	81	81	81	81	81	81	81	81	81	81	81	81	81	81	81	81	81	81	81	81	81	77	79	81	70	71	81	64	64	78	59	58	73	54	53	68	50	49	64	47	45
				Exposed	81	81	81	81	81	81	81	78	81	81	73	75	81	69	70	81	65	66	81	62	62	79	59	58	72	54	52	66	49	48	62	45	43	57	42	40	53	39	37	50	36	34
	C	2:12	9.5	Non-Exposed	80	80	80	80	80	80	80	80	80	80	79	75	80	75	71	80	71	67	76	67	64	72	64	61	66	58	55	61	53	51	56	49	47	52	46	43	49	42	40	46	40	38
				Exposed	80	74	70	78	69	66	73	65	62	69	61	58	65	58	55	62	55	52	59	52	49	57	49	47	52	45	43	48	41	39	45	38	36	42	36	34	39	33	32	37	32	0
		3:12	14.0	Non-Exposed	78	78	78	78	78	78	78	78	78	78	78	75	78	74	71	78	70	67	75	67	64	71	64	60	65	58	55	60	53	51	56	49	47	52	45	43	49	42	40	46	40	38
				Exposed	78	73	70	77	69	65	72	64	61	68	61	58	65	57	55	62	55	52	59	52	49	56	49	47	52	45	43	48	41	39	45	38	36	42	35	34	39	33	32	37	32	0
		4:12	18.4	Non-Exposed	80	80	80	80	80	80	80	80	79	80	78	74	80	74	70	79	70	67	75	67	63	71	63	60	65	58	55	60	53	50	56	49	47	52	45	43	49	42	40	46	40	38
				Exposed	80	73	69	77	68	65	72	64	61	68	61	58	65	57	54	62	54	52	59	52	49	56	49	47	52	45	43	48	41	39	44	38	36	42	35	34	39	33	32	37	32	0
		5:12	22.6	Non-Exposed	79	79		79	79		79	79		79	79		79	79		79	79		79	75		79	71		79	65		75	59		69	55		64	51		59	47		56	44	
				Exposed	79	79		79	77		79	72		79	68		79	64		77	61		73	58		70	55		63	50		58	46		53	43		49	40		46	37		43	35	
		6:12	26.6	Non-Exposed	80	80		80	80		80	80		80	80		80	80		80	78		80	74		80	71		80	64		75	59		69	55		64	51		59	47		55	44	
				Exposed	80	80		80	76		80	72		80	68		80	64		77	61		73	58		69	55		63	50		58	46		53	43		49	39		46	37		43	35	
		7:12	30.3	Non-Exposed	80	80	80	80	80	80	80	80	80	80	79	80	80	74	76	80	70	71	80	66	67	80	63	63	77	57	56	71	52	51	65	48	46	61	44	42	56	41	39	53	38	36
				Exposed	80	73	75	80	68	69	80	64	64	80	60	59	77	56	56	73	53	52	69	51	49	66	48	46	60	44	42	55	40	38	51	37	34	47	34	32	44	32	0	41	0	0
		8:12	33.7	Non-Exposed	80	80	80	80	80	80	80	80	80	80	78	80	80	74	76	80	70	71	80	66	66	80	63	62	77	57	56	70	52	50	65	48	46	60	44	42	56	41	39	53	38	36
				Exposed	80	72	74	80	68	69	80	63	64	80	60	59	76	56	55	72	53	52	69	50	49	65	48	46	60	43	41	55	40	38	51	37	34	47	34	32	44	32	0	41	0	0
		9:12	36.9	Non-Exposed	81	81	81	81	81	81	81	81	81	81	78	81	81	73	75	81	69	70	81	66	66	81	62	62	76	56	56	70	52	50	65	47	46	60	44	42	56	41	39	52	38	36
				Exposed	81	72	74	81	67	68	81	63	63	80	59	59	76	56	55	72	53	52	68	50	49	65	48	46	59	43	41	55	40	38	50	37	34	47	34	32	44	32	0	41	0	0
		10:12	39.8	Non-Exposed	81	81	81	81	81	81	81	81	81	81	77	80	81	73	75	81	69	70	81	65	66	81	62	62	76	56	55	70	51	50	64	47	46	60	44	42	56	41	39	52	38	36
				Exposed	81	72	73	81	67	68	81	63	63	79	59	59	75	56	55	72	53	52	68	50	49	65	48	46	59	43	41	54	40	37	50	36	34	47	34	32	44	32	0	41	0	0
		11:12	42.5	Non-Exposed	82	82	82	82	82	82	82	82	82	82	77	80	82	73	74	82	69	70	82	65	65	82	62	62	76	56	55	69	51	50	64	47	46	60	44	42	56	41	39	52	38	36
				Exposed	82	71	73	82	67	67	82	63	63	79	59	59	75	56	55	71	53	51	68	50	49	65	48	46	59	43	41	54	40	37	50	36	34	47	34	32	44	32	0	41	0	0
		12:12	45	Non-Exposed	81	81	81	81	81	81	81	81	81	81	76	79	81	72	74	81	68	69	81	65	65	81	62	61	75	56	55	69	51	50	64	47	45	60	44	42	56	41	38	52	38	36
				Exposed	81	71	73	81	67	67	81	63	62	79	59	58	75	56	55	71	53	51	68	50	48	64	47	46	59	43	41	54	40	37	50	36	34	47	34	32	44	32	0	41	0	0
	D	2:12	9.5	Non-Exposed	80	80	80	80	80	77	80	76	72	80	71	68	76	67	64	71	64	60	68	60	57	65	57	55	60	52	50	55	48	46	51	44	42	48	41	39	45	38	36	42	36	34
				Exposed	74	66	63	70	62	59	66	58	55	62	55	52	59	52	49	56	49	47	54	47	45	51	45	42	47	41	39	44	37	36	41	35	33	38	33	31	36	0	0	34	0	0
		3:12	14.0	Non-Exposed	78	78	78	78	78	76	78	75	71	78	71	67	75	67	64	71	63	60	68	60	57	65	57	54	59	52	50	55	48	46	51	44	42	48	41	39	45	38	36	42	36	34
				Exposed	74	66	63	69	62	59	65	58	55	62	55	52	59	52	49	56	49	47	54	47	44	51	44	42	47	41	39	44	37	36	41	35	33	38	33	31	36	0	0	34	0	0
		4:12	18.4	Non-Exposed	80	80	80	80	79	75	80	75	71	79	70	67	75	66	63	70	63	60	67	60	57	64	57	54	59	52	49	55	48	45	51	44	42	47	41	39	45	38	36	42	36	34
				Exposed	73	65	62	69	61	58	65	58	55	62	55	52	59	52	49	56	49	47	53	47	44	51	44	42	47	41	39	44	37	35	40	35	33	38	32	0	35	0	0	34	0	0
		5:12	22.6	Non-Exposed	79	79		79	79		79	79		79	79		79	75		79	71		79	67		79	64		74	58		67	53		62	49		57	46		53	43		50	40	
				Exposed	79	74		79	69		79	65		77	61		73	58		69	55		66	52		62	50		57	45		52	42		48	38		45	36		41	34		39	32	
		6:12	26.6	Non-Exposed	80	80		80	80		80	80		80	78		80	74		80	70		80	67		80	64		73	58		67	53		62	49		57	46		53	43		50	40	
				Exposed	80	73		80	69		80	64		77	61		73	58		69	55		65	52		62	49		57	45		52	42		48	38		44	36		41	34		39	32	
		7:12	30.3	Non-Exposed	80	80	80	80	80	80	80	75	77	80	70	72	80	66	67	80	62	62	80	59	59	76	56	55	69	51	49	64	46	45	59	43	41	55	39	37	51	37	35	48	34	32
				Exposed	80	65	65	80	61	60	77	57	56	73	54	52	69	50	49	65	48	46	62	45	43	59	43	41	54	39	37	50	36	34	46	33	31	42	31	0	40	0	0	37	0	0
		8:12	33.7	Non-Exposed	80	80	80	80	79	80	80	74	77	80	70	71	80	66	66	80	62	62	79	59	58	76	56	55	69	51	49	63	46	45	59	43	41	54	39	37	51	37	34	47	34	32
				Exposed	80	65	65	80	61	60	77	57	56	72	53	52	69	50	49	65	48	46	62	45	43	59	43	41	54	39	37	49	36	34	46	33	31	42	31	0	40	0	0	37	0	0
		9:12	36.9	Non-Exposed	81	81	81	81	79	81	81	74	76	81	69	71	81	65	66	81	62	62	79	59	58	75	56	55	69	51	49	63	46	44	58	43	41	54	39	37	51	37	34	47	34	32
				Exposed	81	64	65	81	60	60	76	57	56	72	53	52	68	50	49	65	48	46	62	45	43	59	43	41	54	39	37	49	36	34	46	33	31	42	31	0	39	0	0	37	0	0
		10:12	39.8	Non-Exposed	81	81	81	81	78	81	81	73	75	81	69	70	81	65	66	81	62	62	79	59	58	75	56	55	68	50	49	63	46	44	58	42	40	54	39	37	50	37	34	47	34	32
				Exposed	81	64	64	81	60	60	76	56	56	72	53	52	68	50	49	65	47	46	61	45	43	59	43	41	53	39	37	49	36	34	45	33	31	42	31	0	39	0	0	37	0	0
		11:12	42.5	Non-Exposed	82	82	82	82	78	81	82	73	75	82	69	70	82	65	65	82	62	61	78	58	58	75	55	54	68	50	49	63	46	44	58	42	40	54	39	37	50	36	34	47	34	32
				Exposed	82	64	64	80	60	59	76	56	55	71	53	52	68	50	48	64	47	46	61	45	43	58	43	41	53	39	37	49	36	33	45	33	31	42	31	0	39	0	0	37	0	0
		12:12	45	Non-Exposed	81	81	81	81	78	80	81	73	75	81	69	70	81	65	65	81	61	61	78	58	58	74	55	54	68	50	49	63	46	44	58	42	40	54	39	37	50	36	34	47	34	32
				Exposed	81	64	64	80	60	59	75	56	55	71	53	52	68	50	48	64	47	46	61	45	43	58	43	41	53	39	37	49	35	33	45	33	31	42	31	0	39	0	0	37	0	0

Tamarack 2.3 Rail – Hip Flush-Mount on 30 Foot Maximum Mean Roof Height – Portrait – Panel Length = 80 Inches or Less

Ground Snow Load	Exposure Category	Roof Pitch	Roof Angle	Wind Speed (mph)	95			100			105			110			115			120			125			130			140			150			160			170			180			190		
				Roof Area	1	2	3	1	2	3	1	2	3	1	2	3	1	2	3	1	2	3	1	2	3	1	2	3	1	2	3	1	2	3	1	2	3	1	2	3	1	2	3	1	2	3
10	B	2:12	9.5	Non-Exposed	70	70	70	70	70	70	70	70	70	70	70	70	70	70	70	70	70	70	70	70	70	70	70	70	70	70	69	70	66	63	68	61	58	64	56	54	60	52	50	56	49	47
				Exposed	70	70	70	70	70	70	70	70	70	70	70	70	70	70	68	70	68	64	70	64	61	69	61	58	63	56	53	58	51	49	54	47	45	51	44	42	47	41	39	45	38	36
		3:12	14.0	Non-Exposed	68	68	68	68	68	68	68	68	68	68	68	68	68	68	68	68	68	68	68	68	68	68	68	68	68	68	68	68	66	63	68	61	58	63	56	53	59	52	50	56	49	47
				Exposed	68	68	68	68	68	68	68	68	68	68	68	68	68	68	68	68	67	64	68	64	61	68	61	58	63	56	53	58	51	48	54	47	45	50	44	42	47	41	39	44	38	36
		4:12	18.4	Non-Exposed	70	70	70	70	70	70	70	70	70	70	70	70	70	70	70	70	70	70	70	70	70	70	70	70	70	70	68	70	65	62	68	60	57	63	56	53	59	52	50	56	49	46
				Exposed	70	70	70	70	70	70	70	70	70	70	70	70	70	70	67	70	67	64	70	64	61	68	61	58	63	55	53	58	51	48	54	47	45	50	44	41	47	41	39	44	38	36
		5:12	22.6	Non-Exposed	71	71		71	71		71	71		71	71		71	71		71	71		71	71		71	71		71	71		71	71		71	68		71	63		70	58		68	55	
				Exposed	71	71		71	71		71	71		71	71		71	71		71	71		71	71		71	68		71	62		71	57		66	53		61	49		57	45		53	42	
		6:12	26.6	Non-Exposed	71	71		71	71		71	71		71	71		71	71		71	71		71	71		71	71		71	71		71	71		71	67		71	62		71	58		68	54	
				Exposed	71	71		71	71		71	71		71	71		71	71		71	71		71	71		71	68		71	62		71	57		66	52		61	49		57	45		53	42	
		7:12	30.3	Non-Exposed	72	72	72	72	72	72	72	72	72	72	72	72	72	72	72	72	72	72	72	72	72	72	72	72	72	71	72	72	65	65	72	60	59	72	55	54	70	51	50	65	47	46
				Exposed	72	72	72	72	72	72	72	72	72	72	72	72	72	71	72	72	67	67	72	63	63	72	60	60	72	54	53	68	50	48	63	46	44	58	42	40	54	39	37	51	36	34
		8:12	33.7	Non-Exposed	73	73	73	73	73	73	73	73	73	73	73	73	73	73	73	73	73	73	73	73	73	73	73	73	73	71	72	73	65	65	73	59	59	73	55	54	69	51	49	65	47	46
				Exposed	73	73	73	73	73	73	73	73	73	73	73	73	73	70	72	73	66	67	73	63	63	73	60	59	73	54	53	67	50	48	62	46	44	58	42	40	54	39	37	50	36	34
		9:12	36.9	Non-Exposed	74	74	74	74	74	74	74	74	74	74	74	74	74	74	74	74	74	74	74	74	74	74	74	74	74	71	72	74	64	65	74	59	59	74	55	54	69	51	49	64	47	46
				Exposed	74	74	74	74	74	74	74	74	74	74	74	74	74	70	71	74	66	67	74	63	63	74	60	59	73	54	53	67	49	48	62	45	44	58	42	40	54	39	37	50	36	34
		10:12	39.8	Non-Exposed	75	75	75	75	75	75	75	75	75	75	75	75	75	75	75	75	75	75	75	75	75	75	75	75	75	70	72	75	64	64	75	59	58	74	55	53	69	51	49	64	47	45
				Exposed	75	75	75	75	75	75	75	75	75	75	74	75	75	70	71	75	66	66	75	62	62	75	59	59	73	54	53	67	49	48	62	45	43	57	42	40	54	39	37	50	36	34
		11:12	42.5	Non-Exposed	76	76	76	76	76	76	76	76	76	76	76	76	76	76	76	76	76	76	76	76	76	76	76	76	76	70	71	76	64	64	76	59	58	73	54	53	68	50	49	64	47	45
				Exposed	76	76	76	76	76	76	76	76	76	76	74	76	76	69	71	76	66	66	76	62	62	76	59	59	72	54	53	67	49	48	62	45	43	57	42	40	53	39	37	50	36	34
		12:12	45	Non-Exposed	77	77	77	77	77	77	77	77	77	77	77	77	77	77	77	77	77	77	77	77	77	77	77	77	77	70	71	77	64	64	77	59	58	73	54	53	68	50	49	64	47	45
				Exposed	77	77	77	77	77	77	77	77	77	77	73	75	77	69	70	77	65	66	77	62	62	77	59	58	72	54	52	66	49	48	62	45	43	57	42	40	53	39	37	50	36	34
	C	2:12	9.5	Non-Exposed	70	70	70	70	70	70	70	70	70	70	70	70	70	70	70	70	70	67	70	67	64	70	64	61	66	58	55	61	53	51	56	49	47	52	46	43	49	42	40	46	40	38
				Exposed	70	70	70	70	69	66	70	65	62	69	61	58	65	58	55	62	55	52	59	52	49	57	49	47	52	45	43	48	41	39	45	38	36	42	36	34	39	33	32	37	32	0
		3:12	14.0	Non-Exposed	68	68	68	68	68	68	68	68	68	68	68	68	68	68	68	68	68	67	68	67	64	68	64	60	65	58	55	60	53	51	56	49	47	52	45	43	49	42	40	46	40	38
				Exposed	68	68	68	68	68	65	68	64	61	68	61	58	65	57	55	62	55	52	59	52	49	56	49	47	52	45	43	48	41	39	45	38	36	42	35	34	39	33	32	37	32	0
		4:12	18.4	Non-Exposed	70	70	70	70	70	70	70	70	70	70	70	70	70	70	70	70	70	67	70	67	63	70	63	60	65	58	55	60	53	50	56	49	47	52	45	43	49	42	40	46	40	38
				Exposed	70	70	69	70	68	65	70	64	61	68	61	58	65	57	54	62	54	52	59	52	49	56	49	47	52	45	43	48	41	39	44	38	36	42	35	34	39	33	32	37	32	0
		5:12	22.6	Non-Exposed	71	71		71	71		71	71		71	71		71	71		71	71		71	71		71	71		71	65		70	59		68	55		64	51		59	47		56	44	
				Exposed	71	71		71	71		71	71		71	68		71	64		71	61		71	58		70	55		63	50		58	46		53	43		49	40		46	37		43	35	
		6:12	26.6	Non-Exposed	71	71		71	71		71	71		71	71		71	71		71	71		71	71		71	71		71	64		71	59		69	55		64	51		59	47		55	44	
				Exposed	71	71		71	71		71	71		71	68		71	64		71	61		71	58		69	55		63	50		58	46		53	43		49	39		46	37		43	35	
		7:12	30.3	Non-Exposed	72	72	72	72	72	72	72	72	72	72	72	72	72	72	72	72	70	71	72	66	67	72	63	63	72	57	56	71	52	51	65	48	46	61	44	42	56	41	39	53	38	36
				Exposed	72	72	72	72	68	69	72	64	64	72	60	59	72	56	56	72	53	52	69	51	49	66	48	46	60	44	42	55	40	38	51	37	34	47	34	32	44	32	0	41	0	0
		8:12	33.7	Non-Exposed	73	73	73	73	73	73	73	73	73	73	73	73	73	73	73	73	70	71	73	66	66	73	63	62	73	57	56	70	52	50	65	48	46	60	44	42	56	41	39	53	38	36
				Exposed	73	72	73	73	68	69	73	63	64	73	60	59	73	56	55	72	53	52	69	50	49	65	48	46	60	43	41	55	40	38	51	37	34	47	34	32	44	32	0	41	0	0
		9:12	36.9	Non-Exposed	74	74	74	74	74	74	74	74	74	74	74	74	74	73	74	74	69	70	74	66	66	74	62	62	74	56	56	70	52	50	65	47	46	60	44	42	56	41	39	52	38	36
				Exposed	74	72	74	74	67	68	74	63	63	74	59	59	74	56	55	72	53	52	68	50	49	65	48	46	59	43	41	55	40	38	50	37	34	47	34	32	44	32	0	41	0	0
		10:12	39.8	Non-Exposed	75	75	75	75	75	75	75	75	75	75	75	75	75	73	75	75	69	70	75	65	66	75	62	62	75	56	55	70	51	50	64	47	46	60	44	42	56	41	39	52	38	36
				Exposed	75	72	73	75	67	68	75	63	63	75	59	59	75	56	55	72	53	52	68	50	49	65	48	46	59	43	41	54	40	37	50	36	34	47	34	32	44	32	0	41	0	0
		11:12	42.5	Non-Exposed	76	76	76	76	76	76	76	76	76	76	76	76	76	73	74	76	69	70	76	65	65	76	62	62	76	56	55	69	51	50	64	47	46	60	44	42	56	41	39	52	38	36
				Exposed	76	71	73	76	67	67	76	63	63	76	59	59	75	56	55	71	53	51	68	50	49	65	48	46	59	43	41	54	40	37	50	36	34	47	34	32	44	32	0	41	0	0
		12:12	45	Non-Exposed	77	77	77	77	77	77	77	77	77	77	76	77	77	72	74	77	68	69	77	65	65	77	62	61	75	56	55	69	51	50	64	47	45	60	44	42	56	41	38	52	38	36
				Exposed	77	71	73	77	67	67	77	63	62	77	59	58	75	56	55	71	53	51	68	50	48	64	47	46	59	43	41	54	40	37	50	36	34	47	34	32	44	32	0	41	0	0
	D	2:12	9.5	Non-Exposed	70	70	70	70	70	70	70	70	70	70	70	68	70	67	64	70	64	60	68	60	57	65	57	55	60	52	50	55	48	46	51	44	42	48	41	39	45	38	36	42	36	34
				Exposed	70	66	63	70	62	59	66	58	55	62	55	52	59	52	49	56	49	47	54	47	45	51	45	42	47	41	39	44	37	36	41	35	33	38	33	31	36	0	0	34	0	0
		3:12	14.0	Non-Exposed	68	68	68	68	68	68	68	68	68	68	68	67	68	67	64	68	63	60	68	60	57	65	57	54	59	52	50	55	48	46	51	44	42	48	41	39	45	38	36	42	36	34
				Exposed	68	66	63	68	62	59	65	58	55	62	55	52	59	52	49	56	49	47	54	47	44	51	44	42	47	41	39	44	37	36	41	35	33	38	33	31	36	0	0	34	0	0
		4:12	18.4	Non-Exposed	70	70	70	70	70	70	70	70	70	70	70	67	70	66	63	70	63	60	67	60	57	64	57	54	59	52	49	55	48	45	51	44	42	47	41	39	45	38	36	42	36	34
				Exposed	70	65	62	69	61	58	65	58	55	62	55	52	59	52	49	56	49	47	53	47	44	51	44	42	47	41	39	44	37	35	40	35	33	38	32	0	35	0	0	34	0	0
		5:12	22.6	Non-Exposed	71	71		71	71		71	71		71	71		71	71		71	71		71	67		71	64		70	58		67	53		62	49		57	46		53	43		50	40	
				Exposed	71	71		71	69		71	65		71	61		71	58		69	55		66	52		62	50		57	45		52	42		48	38		45	36		41	34		39	32	
		6:12	26.6	Non-Exposed	71	71		71	71		71	71		71	71		71	71		71	70		71	67		71	64		71	58		67	53		62	49		57	46		53	43		50	40	
				Exposed	71	71		71	69		71	64		71	61		71	58		69	55		65	52		62	49		57	45		52	42		48	38		44	36		41	34		39	32	
		7:12	30.3	Non-Exposed	72	72	72	72	72	72	72	72	72	72	70	72	72	66	67	72	62	62	72	59	59	72	56	55	69	51	49	64	46	45	59	43	41	55	39	37	51	37	35	48	34	32
				Exposed	72	65	65	72	61	60	72	57	56	72	54	52	69	50	49	65	48	46	62	45	43	59	43	41	54	39	37	50	36	34	46	33	31	42	31	0	40	0	0	37	0	0
		8:12	33.7	Non-Exposed	73	73	73	73	73	73	73	73	73	73	70	71	73	66	66	73	62	62	73	59	58	73	56	55	69	51	49	63	46	45	59	43	41	54	39	37	51	37	34	47	34	32
				Exposed	73	65	65	73	61	60	73	57	56	72	53	52	69	50	49	65	48	46	62	45	43	59	43	41	54	39	37	49	36	34	46	33	31	42	31	0	40	0	0	37	0	0
		9:12	36.9	Non-Exposed	74	74	74	74	74	74	74	74	74	74	69	71	74	65	66	74	62	62	74	59	58	74	56	55	69	51	49	63	46	44	58	43	41	54	39	37	51	37	34	47	34	32
				Exposed	74	64	65	74	60	60	74	57	56	72	53	52	68	50	49	65	48	46	62	45	43	59	43	41	54	39	37	49	36	34	46	33	31	42	31	0	39	0	0	37	0	0
		10:12	39.8	Non-Exposed	75	75	75	75	75	75	75	73	75	75	69	70	75	65	66	75	62	62	75	59	58	75	56	55	68	50	49	63	46	44	58	42	40	54	39	37	50	37	34	47	34	32
				Exposed	75	64	64	75	60	60	75	56	56	72	53	52	68	50	49	65	47	46	61	45	43	59	43	41	53	39	37	49	36	34	45	33	31	42	31	0	39	0	0	37	0	0
		11:12	42.5	Non-Exposed	76	76	76	76	76	76	76	73	75	76	69	70	76	65	65	76	62	61	76	58	58	75	55	54	68	50	49	63	46	44	58	42	40	54	39	37	50	36	34	47	34	32
				Exposed	76	64	64	76	60	59	76	56	55	71	53	52	68	50	48	64	47	46	61	45	43	58	43	41	53	39	37	49	36	33	45	33	31	42	31	0	39	0	0	37	0	0
		12:12	45	Non-Exposed	77	77	77	77	77	77	77	73	75	77	69	70	77	65	65	77	61	61	77	58	58	74	55	54	68	50	49	63	46	44	58	42	40	54	39	37	50	36	34	47	34	32
				Exposed	77	64	64	77	60	59	75	56	55	71	53	52	68	50	48	64	47	46	61	45	43	58	43	41	53	39	37	49	35	33	45	33	31	42	31	0	39	0	0	37	0	0

Tamarack 2.3 Rail – Hip Flush-Mount on 30 Foot Maximum Mean Roof Height – Portrait – Panel Length = 80 Inches or Less

Ground Snow Load	Exposure Category	Roof Pitch	Roof Angle	Wind Speed (mph)	95			100			105			110			115			120			125			130			140			150			160			170			180			190		
				Roof Area	1	2	3	1	2	3	1	2	3	1	2	3	1	2	3	1	2	3	1	2	3	1	2	3	1	2	3	1	2	3	1	2	3	1	2	3	1	2	3	1	2	3
15	B	2:12	9.5	Non-Exposed	63	63	63	63	63	63	63	63	63	63	63	63	63	63	63	63	63	63	63	63	63	63	63	63	63	63	63	63	63	63	63	61	58	63	56	54	60	52	50	56	49	47
				Exposed	63	63	63	63	63	63	63	63	63	63	63	63	63	63	63	63	63	63	63	63	61	63	61	58	63	56	53	58	51	49	54	47	45	51	44	42	47	41	39	45	38	36
		3:12	14.0	Non-Exposed	61	61	61	61	61	61	61	61	61	61	61	61	61	61	61	61	61	61	61	61	61	61	61	61	61	61	61	61	61	61	61	61	58	61	56	53	59	52	50	56	49	47
				Exposed	61	61	61	61	61	61	61	61	61	61	61	61	61	61	61	61	61	61	61	61	61	61	61	58	61	56	53	58	51	48	54	47	45	50	44	42	47	41	39	44	38	36
		4:12	18.4	Non-Exposed	64	64	64	64	64	64	64	64	64	64	64	64	64	64	64	64	64	64	64	64	64	64	64	64	64	64	64	64	64	62	64	60	57	63	56	53	59	52	50	56	49	46
				Exposed	64	64	64	64	64	64	64	64	64	64	64	64	64	64	64	64	64	64	64	64	61	64	61	58	63	55	53	58	51	48	54	47	45	50	44	41	47	41	39	44	38	36
		5:12	22.6	Non-Exposed	64	64		64	64		64	64		64	64		64	64		64	64		64	64		64	64		64	64		64	64		64	64		64	63		63	58		62	55	
				Exposed	64	64		64	64		64	64		64	64		64	64		64	64		64	64		64	64		64	62		64	57		64	53		61	49		57	45		53	42	
		6:12	26.6	Non-Exposed	65	65		65	65		65	65		65	65		65	65		65	65		65	65		65	65		65	65		65	65		65	65		65	62		64	58		63	54	
				Exposed	65	65		65	65		65	65		65	65		65	65		65	65		65	65		65	65		65	62		65	57		65	52		61	49		57	45		53	42	
		7:12	30.3	Non-Exposed	66	66	66	66	66	66	66	66	66	66	66	66	66	66	66	66	66	66	66	66	66	66	66	66	66	66	66	66	65	65	66	60	59	66	55	54	65	51	50	64	47	46
				Exposed	66	66	66	66	66	66	66	66	66	66	66	66	66	66	66	66	66	66	66	63	63	66	60	60	66	54	53	66	50	48	63	46	44	58	42	40	54	39	37	51	36	34
		8:12	33.7	Non-Exposed	67	67	67	67	67	67	67	67	67	67	67	67	67	67	67	67	67	67	67	67	67	67	67	67	67	67	67	67	65	65	67	59	59	67	55	54	66	51	49	65	47	46
				Exposed	67	67	67	67	67	67	67	67	67	67	67	67	67	67	67	67	66	67	67	63	63	67	60	59	67	54	53	67	50	48	62	46	44	58	42	40	54	39	37	50	36	34
		9:12	36.9	Non-Exposed	68	68	68	68	68	68	68	68	68	68	68	68	68	68	68	68	68	68	68	68	68	68	68	68	68	68	68	68	64	65	68	59	59	68	55	54	68	51	49	64	47	46
				Exposed	68	68	68	68	68	68	68	68	68	68	68	68	68	68	68	68	66	67	68	63	63	68	60	59	68	54	53	67	49	48	62	45	44	58	42	40	54	39	37	50	36	34
		10:12	39.8	Non-Exposed	70	70	70	70	70	70	70	70	70	70	70	70	70	70	70	70	70	70	70	70	70	70	70	70	70	70	70	70	64	64	70	59	58	70	55	53	69	51	49	64	47	45
				Exposed	70	70	70	70	70	70	70	70	70	70	70	70	70	70	70	70	66	66	70	62	62	70	59	59	70	54	53	67	49	48	62	45	43	57	42	40	54	39	37	50	36	34
		11:12	42.5	Non-Exposed	71	71	71	71	71	71	71	71	71	71	71	71	71	71	71	71	71	71	71	71	71	71	71	71	71	70	71	71	64	64	71	59	58	71	54	53	68	50	49	64	47	45
				Exposed	71	71	71	71	71	71	71	71	71	71	71	71	71	69	71	71	66	66	71	62	62	71	59	59	71	54	53	67	49	48	62	45	43	57	42	40	53	39	37	50	36	34
		12:12	45	Non-Exposed	73	73	73	73	73	73	73	73	73	73	73	73	73	73	73	73	73	73	73	73	73	73	73	73	73	70	71	73	64	64	73	59	58	73	54	53	68	50	49	64	47	45
				Exposed	73	73	73	73	73	73	73	73	73	73	73	73	73	69	70	73	65	66	73	62	62	73	59	58	72	54	52	66	49	48	62	45	43	57	42	40	53	39	37	50	36	34
	C	2:12	9.5	Non-Exposed	63	63	63	63	63	63	63	63	63	63	63	63	63	63	63	63	63	63	63	63	61	63	58	55	61	53	51	56	49	47	52	46	43	49	42	40	46	40	38
				Exposed	63	63	63	63	63	63	63	63	62	63	61	58	63	58	55	62	55	52	59	52	49	57	49	47	52	45	43	48	41	39	45	38	36	42	36	34	39	33	32	37	32	0
		3:12	14.0	Non-Exposed	61	61	61	61	61	61	61	61	61	61	61	61	61	61	61	61	61	61	61	61	61	61	61	60	61	58	55	60	53	51	56	49	47	52	45	43	49	42	40	46	40	38
				Exposed	61	61	61	61	61	61	61	61	61	61	61	58	61	57	55	61	55	52	59	52	49	56	49	47	52	45	43	48	41	39	45	38	36	42	35	34	39	33	32	37	32	0
		4:12	18.4	Non-Exposed	64	64	64	64	64	64	64	64	64	64	64	64	64	64	64	64	64	64	64	64	63	64	63	60	64	58	55	60	53	50	56	49	47	52	45	43	49	42	40	46	40	38
				Exposed	64	64	64	64	64	64	64	64	61	64	61	58	64	57	54	62	54	52	59	52	49	56	49	47	52	45	43	48	41	39	44	38	36	42	35	34	39	33	32	37	32	0
		5:12	22.6	Non-Exposed	64	64		64	64		64	64		64	64		64	64		64	64		64	64		64	64		64	64		63	59		62	55		60	51		59	47		56	44	
				Exposed	64	64		64	64		64	64		64	64		64	64		64	61		64	58		64	55		63	50		58	46		53	43		49	40		46	37		43	35	
		6:12	26.6	Non-Exposed	65	65		65	65		65	65		65	65		65	65		65	65		65	65		65	65		65	64		64	59		63	55		61	51		59	47		55	44	
				Exposed	65	65		65	65		65	65		65	65		65	64		65	61		65	58		65	55		63	50		58	46		53	43		49	39		46	37		43	35	
		7:12	30.3	Non-Exposed	66	66	66	66	66	66	66	66	66	66	66	66	66	66	66	66	66	66	66	66	66	66	63	63	66	57	56	65	52	51	64	48	46	61	44	42	56	41	39	53	38	36
				Exposed	66	66	66	66	66	66	66	64	64	66	60	59	66	56	56	66	53	52	66	51	49	66	48	46	60	44	42	55	40	38	51	37	34	47	34	32	44	32	0	41	0	0
		8:12	33.7	Non-Exposed	67	67	67	67	67	67	67	67	67	67	67	67	67	67	67	67	67	67	67	66	66	67	63	62	67	57	56	67	52	50	65	48	46	60	44	42	56	41	39	53	38	36
				Exposed	67	67	67	67	67	67	67	63	64	67	60	59	67	56	55	67	53	52	67	50	49	65	48	46	60	43	41	55	40	38	51	37	34	47	34	32	44	32	0	41	0	0
		9:12	36.9	Non-Exposed	68	68	68	68	68	68	68	68	68	68	68	68	68	68	68	68	68	68	68	66	66	68	62	62	68	56	56	68	52	50	65	47	46	60	44	42	56	41	39	52	38	36
				Exposed	68	68	68	68	67	68	68	63	63	68	59	59	68	56	55	68	53	52	68	50	49	65	48	46	59	43	41	55	40	38	50	37	34	47	34	32	44	32	0	41	0	0
		10:12	39.8	Non-Exposed	70	70	70	70	70	70	70	70	70	70	70	70	70	70	70	70	69	70	70	65	66	70	62	62	70	56	55	70	51	50	64	47	46	60	44	42	56	41	39	52	38	36
				Exposed	70	70	70	70	67	68	70	63	63	70	59	59	70	56	55	70	53	52	68	50	49	65	48	46	59	43	41	54	40	37	50	36	34	47	34	32	44	32	0	41	0	0
		11:12	42.5	Non-Exposed	71	71	71	71	71	71	71	71	71	71	71	71	71	71	71	71	69	70	71	65	65	71	62	62	71	56	55	69	51	50	64	47	46	60	44	42	56	41	39	52	38	36
				Exposed	71	71	71	71	67	67	71	63	63	71	59	59	71	56	55	71	53	51	68	50	49	65	48	46	59	43	41	54	40	37	50	36	34	47	34	32	44	32	0	41	0	0
		12:12	45	Non-Exposed	73	73	73	73	73	73	73	73	73	73	73	73	73	72	73	73	68	69	73	65	65	73	62	61	73	56	55	69	51	50	64	47	45	60	44	42	56	41	38	52	38	36
				Exposed	73	71	73	73	67	67	73	63	62	73	59	58	73	56	55	71	53	51	68	50	48	64	47	46	59	43	41	54	40	37	50	36	34	47	34	32	44	32	0	41	0	0
	D	2:12	9.5	Non-Exposed	63	63	63	63	63	63	63	63	63	63	63	63	63	63	63	63	63	60	63	60	57	63	57	55	60	52	50	55	48	46	51	44	42	48	41	39	45	38	36	42	36	34
				Exposed	63	63	63	63	62	59	63	58	55	62	55	52	59	52	49	56	49	47	54	47	45	51	45	42	47	41	39	44	37	36	41	35	33	38	33	31	36	0	0	34	0	0
		3:12	14.0	Non-Exposed	61	61	61	61	61	61	61	61	61	61	61	61	61	61	61	61	61	60	61	60	57	61	57	54	59	52	50	55	48	46	51	44	42	48	41	39	45	38	36	42	36	34
				Exposed	61	61	61	61	61	59	61	58	55	61	55	52	59	52	49	56	49	47	54	47	44	51	44	42	47	41	39	44	37	36	41	35	33	38	33	31	36	0	0	34	0	0
		4:12	18.4	Non-Exposed	64	64	64	64	64	64	64	64	64	64	64	64	64	64	63	64	63	60	64	60	57	64	57	54	59	52	49	55	48	45	51	44	42	47	41	39	45	38	36	42	36	34
				Exposed	64	64	62	64	61	58	64	58	55	62	55	52	59	52	49	56	49	47	53	47	44	51	44	42	47	41	39	44	37	35	40	35	33	38	32	0	35	0	0	34	0	0
		5:12	22.6	Non-Exposed	64	64		64	64		64	64		64	64		64	64		64	64		64	64		64	64		63	58		62	53		60	49		57	46		53	43		50	40	
				Exposed	64	64		64	64		64	64		64	61		64	58		64	55		64	52		62	50		57	45		52	42		48	38		45	36		41	34		39	32	
		6:12	26.6	Non-Exposed	65	65		65	65		65	65		65	65		65	65		65	65		65	65		65	64		64	58		62	53		61	49		57	46		53	43		50	40	
				Exposed	65	65		65	65		65	64		65	61		65	58		65	55		65	52		62	49		57	45		52	42		48	38		44	36		41	34		39	32	
		7:12	30.3	Non-Exposed	66	66	66	66	66	66	66	66	66	66	66	66	66	66	66	66	62	62	66	59	59	66	56	55	65	51	49	63	46	45	59	43	41	55	39	37	51	37	35	48	34	32
				Exposed	66	65	65	66	61	60	66	57	56	66	54	52	66	50	49	65	48	46	62	45	43	59	43	41	54	39	37	50	36	34	46	33	31	42	31	0	40	0	0	37	0	0
		8:12	33.7	Non-Exposed	67	67	67	67	67	67	67	67	67	67	67	67	67	66	66	67	62	62	67	59	58	67	56	55	66	51	49	63	46	45	59	43	41	54	39	37	51	37	34	47	34	32
				Exposed	67	65	65	67	61	60	67	57	56	67	53	52	67	50	49	65	48	46	62	45	43	59	43	41	54	39	37	49	36	34	46	33	31	42	31	0	40	0	0	37	0	0
		9:12	36.9	Non-Exposed	68	68	68	68	68	68	68	68	68	68	68	68	68	65	66	68	62	62	68	59	58	68	56	55	68	51	49	63	46	44	58	43	41	54	39	37	51	37	34	47	34	32
				Exposed	68	64	65	68	60	60	68	57	56	68	53	52	68	50	49	65	48	46	62	45	43	59	43	41	54	39	37	49	36	34	46	33	31	42	31	0	39	0	0	37	0	0
		10:12	39.8	Non-Exposed	70	70	70	70	70	70	70	70	70	70	69	70	70	65	66	70	62	62	70	59	58	70	56	55	68	50	49	63	46	44	58	42	40	54	39	37	50	37	34	47	34	32
				Exposed	70	64	64	70	60	60	70	56	56	70	53	52	68	50	49	65	47	46	61	45	43	59	43	41	53	39	37	49	36	34	45	33	31	42	31	0	39	0	0	37	0	0
		11:12	42.5	Non-Exposed	71	71	71	71	71	71	71	71	71	71	69	70	71	65	65	71	62	61	71	58	58	71	55	54	68	50	49	63	46	44	58	42	40	54	39	37	50	36	34	47	34	32
				Exposed	71	64	64	71	60	59	71	56	55	71	53	52	68	50	48	64	47	46	61	45	43	58	43	41	53	39	37	49	36	33	45	33	31	42	31	0	39	0	0	37	0	0
		12:12	45	Non-Exposed	73	73	73	73	73	73	73	73	73	73	69	70	73	65	65	73	61	61	73	58	58	73	55	54	68	50	49	63	46	44	58	42	40	54	39	37	50	36	34	47	34	32
				Exposed	73	64	64	73	60	59	73	56	55	71	53	52	68	50	48	64	47	46	61	45	43	58	43	41	53	39	37	49	35	33	45	33	31	42	31	0	39	0	0	37	0	0

Tamarack 2.3 Rail – Hip Flush-Mount on 30 Foot Maximum Mean Roof Height – Portrait – Panel Length = 80 Inches or Less

Ground Snow Load	Exposure Category	Roof Pitch	Roof Angle	Wind Speed (mph)	95			100			105			110			115			120			125			130			140			150			160			170			180			190		
				Roof Area	1	2	3	1	2	3	1	2	3	1	2	3	1	2	3	1	2	3	1	2	3	1	2	3	1	2	3	1	2	3	1	2	3	1	2	3	1	2	3	1	2	3
20	B	2:12	9.5	Non-Exposed	57	57	57	57	57	57	57	57	57	57	57	57	57	57	57	57	57	57	57	57	57	57	57	57	57	57	57	57	57	57	57	57	57	57	56	54	56	52	50	55	49	47
				Exposed	57	57	57	57	57	57	57	57	57	57	57	57	57	57	57	57	57	57	57	57	57	57	57	57	57	56	53	57	51	49	54	47	45	51	44	42	47	41	39	45	38	36
		3:12	14.0	Non-Exposed	55	55	55	55	55	55	55	55	55	55	55	55	55	55	55	55	55	55	55	55	55	55	55	55	55	55	55	55	55	55	55	55	55	55	55	53	54	52	50	54	49	47
				Exposed	55	55	55	55	55	55	55	55	55	55	55	55	55	55	55	55	55	55	55	55	55	55	55	55	55	55	53	55	51	48	54	47	45	50	44	42	47	41	39	44	38	36
		4:12	18.4	Non-Exposed	59	59	59	59	59	59	59	59	59	59	59	59	59	59	59	59	59	59	59	59	59	59	59	59	59	59	59	59	59	59	59	59	57	58	56	53	57	52	50	56	49	46
				Exposed	59	59	59	59	59	59	59	59	59	59	59	59	59	59	59	59	59	59	59	59	59	59	59	58	59	55	53	58	51	48	54	47	45	50	44	41	47	41	39	44	38	36
		5:12	22.6	Non-Exposed	59	59		59	59		59	59		59	59		59	59		59	59		59	59		59	59		59	59		59	59		59	59		59	59		58	58		57	55	
				Exposed	59	59		59	59		59	59		59	59		59	59		59	59		59	59		59	59		59	59		59	57		59	53		59	49		57	45		53	42	
		6:12	26.6	Non-Exposed	60	60		60	60		60	60		60	60		60	60		60	60		60	60		60	60		60	60		60	60		60	60		60	60		59	58		58	54	
				Exposed	60	60		60	60		60	60		60	60		60	60		60	60		60	60		60	60		60	60		60	57		60	52		60	49		57	45		53	42	
		7:12	30.3	Non-Exposed	61	61	61	61	61	61	61	61	61	61	61	61	61	61	61	61	61	61	61	61	61	61	61	61	61	61	61	61	61	61	61	60	59	61	55	54	60	51	50	59	47	46
				Exposed	61	61	61	61	61	61	61	61	61	61	61	61	61	61	61	61	61	61	61	61	61	61	60	60	61	54	53	61	50	48	61	46	44	58	42	40	54	39	37	51	36	34
		8:12	33.7	Non-Exposed	63	63	63	63	63	63	63	63	63	63	63	63	63	63	63	63	63	63	63	63	63	63	63	63	63	63	63	63	63	63	63	59	59	63	55	54	62	51	49	61	47	46
				Exposed	63	63	63	63	63	63	63	63	63	63	63	63	63	63	63	63	63	63	63	63	63	63	60	59	63	54	53	63	50	48	62	46	44	58	42	40	54	39	37	50	36	34
		9:12	36.9	Non-Exposed	64	64	64	64	64	64	64	64	64	64	64	64	64	64	64	64	64	64	64	64	64	64	64	64	64	64	64	64	64	64	64	59	59	64	55	54	63	51	49	62	47	46
				Exposed	64	64	64	64	64	64	64	64	64	64	64	64	64	64	64	64	63	63	64	63	63	64	60	59	64	54	53	64	49	48	62	45	44	58	42	40	54	39	37	50	36	34
		10:12	39.8	Non-Exposed	66	66	66	66	66	66	66	66	66	66	66	66	66	66	66	66	66	66	66	66	66	66	66	66	66	66	66	66	64	64	66	59	58	66	55	53	65	51	49	64	47	45
				Exposed	66	66	66	66	66	66	66	66	66	66	66	66	66	66	66	66	66	66	66	62	62	66	59	59	66	54	53	66	49	48	62	45	43	57	42	40	54	39	37	50	36	34
		11:12	42.5	Non-Exposed	67	67	67	67	67	67	67	67	67	67	67	67	67	67	67	67	67	67	67	67	67	67	67	67	67	67	67	67	64	64	67	59	58	67	54	53	67	50	49	64	47	45
				Exposed	67	67	67	67	67	67	67	67	67	67	67	67	67	67	67	67	66	66	67	62	62	67	59	59	67	54	53	67	49	48	62	45	43	57	42	40	53	39	37	50	36	34
		12:12	45	Non-Exposed	69	69	69	69	69	69	69	69	69	69	69	69	69	69	69	69	69	69	69	69	69	69	69	69	69	69	69	69	64	64	69	59	58	69	54	53	68	50	49	64	47	45
				Exposed	69	69	69	69	69	69	69	69	69	69	69	69	69	69	69	69	65	66	69	62	62	69	59	58	69	54	52	66	49	48	62	45	43	57	42	40	53	39	37	50	36	34
	C	2:12	9.5	Non-Exposed	57	57	57	57	57	57	57	57	57	57	57	57	57	57	57	57	57	57	57	57	57	57	57	57	57	57	55	56	53	51	55	49	47	52	46	43	49	42	40	46	40	38
				Exposed	57	57	57	57	57	57	57	57	57	57	57	57	57	57	55	57	55	52	57	52	49	57	49	47	52	45	43	48	41	39	45	38	36	42	36	34	39	33	32	37	32	0
		3:12	14.0	Non-Exposed	55	55	55	55	55	55	55	55	55	55	55	55	55	55	55	55	55	55	55	55	55	55	55	55	55	55	55	55	53	51	54	49	47	52	45	43	49	42	40	46	40	38
				Exposed	55	55	55	55	55	55	55	55	55	55	55	55	55	55	55	55	55	52	55	52	49	55	49	47	52	45	43	48	41	39	45	38	36	42	35	34	39	33	32	37	32	0
		4:12	18.4	Non-Exposed	59	59	59	59	59	59	59	59	59	59	59	59	59	59	59	59	59	59	59	59	59	59	59	59	59	58	55	58	53	50	56	49	47	52	45	43	49	42	40	46	40	38
				Exposed	59	59	59	59	59	59	59	59	59	59	59	58	59	57	54	59	54	52	59	52	49	56	49	47	52	45	43	48	41	39	44	38	36	42	35	34	39	33	32	37	32	0
		5:12	22.6	Non-Exposed	59	59		59	59		59	59		59	59		59	59		59	59		59	59		59	59		59	59		58	58		57	55		56	51		55	47		53	44	
				Exposed	59	59		59	59		59	59		59	59		59	59		59	59		59	58		59	55		59	50		58	46		53	43		49	40		46	37		43	35	
		6:12	26.6	Non-Exposed	60	60		60	60		60	60		60	60		60	60		60	60		60	60		60	60		60	60		59	59		58	55		57	51		55	47		54	44	
				Exposed	60	60		60	60		60	60		60	60		60	60		60	60		60	58		60	55		60	50		58	46		53	43		49	39		46	37		43	35	
		7:12	30.3	Non-Exposed	61	61	61	61	61	61	61	61	61	61	61	61	61	61	61	61	61	61	61	61	61	61	61	61	61	57	56	61	52	51	59	48	46	58	44	42	56	41	39	53	38	36
				Exposed	61	61	61	61	61	61	61	61	61	61	60	59	61	56	56	61	53	52	61	51	49	61	48	46	60	44	42	55	40	38	51	37	34	47	34	32	44	32	0	41	0	0
		8:12	33.7	Non-Exposed	63	63	63	63	63	63	63	63	63	63	63	63	63	63	63	63	63	63	63	63	63	63	63	62	63	57	56	62	52	50	61	48	46	59	44	42	56	41	39	53	38	36
				Exposed	63	63	63	63	63	63	63	63	63	63	60	59	63	56	55	63	53	52	63	50	49	63	48	46	60	43	41	55	40	38	51	37	34	47	34	32	44	32	0	41	0	0
		9:12	36.9	Non-Exposed	64	64	64	64	64	64	64	64	64	64	64	64	64	64	64	64	64	64	64	64	64	64	62	62	64	56	56	64	52	50	62	47	46	60	44	42	56	41	39	52	38	36
				Exposed	64	64	64	64	64	64	64	63	63	64	59	59	64	56	55	64	53	52	64	50	49	64	48	46	59	43	41	55	40	38	50	37	34	47	34	32	44	32	0	41	0	0
		10:12	39.8	Non-Exposed	66	66	66	66	66	66	66	66	66	66	66	66	66	66	66	66	66	66	66	65	66	66	62	62	66	56	55	65	51	50	64	47	46	60	44	42	56	41	39	52	38	36
				Exposed	66	66	66	66	66	66	66	63	63	66	59	59	66	56	55	66	53	52	66	50	49	65	48	46	59	43	41	54	40	37	50	36	34	47	34	32	44	32	0	41	0	0
		11:12	42.5	Non-Exposed	67	67	67	67	67	67	67	67	67	67	67	67	67	67	67	67	67	67	67	65	65	67	62	62	67	56	55	67	51	50	64	47	46	60	44	42	56	41	39	52	38	36
				Exposed	67	67	67	67	67	67	67	63	63	67	59	59	67	56	55	67	53	51	67	50	49	65	48	46	59	43	41	54	40	37	50	36	34	47	34	32	44	32	0	41	0	0
		12:12	45	Non-Exposed	69	69	69	69	69	69	69	69	69	69	69	69	69	69	69	69	68	69	69	65	65	69	62	61	69	56	55	69	51	50	64	47	45	60	44	42	56	41	38	52	38	36
				Exposed	69	69	69	69	67	67	69	63	62	69	59	58	69	56	55	69	53	51	68	50	48	64	47	46	59	43	41	54	40	37	50	36	34	47	34	32	44	32	0	41	0	0
	D	2:12	9.5	Non-Exposed	57	57	57	57	57	57	57	57	57	57	57	57	57	57	57	57	57	57	57	57	57	57	57	55	56	52	50	55	48	46	51	44	42	48	41	39	45	38	36	42	36	34
				Exposed	57	57	57	57	57	57	57	57	55	57	55	52	57	52	49	56	49	47	54	47	45	51	45	42	47	41	39	44	37	36	41	35	33	38	33	31	36	0	0	34	0	0
		3:12	14.0	Non-Exposed	55	55	55	55	55	55	55	55	55	55	55	55	55	55	55	55	55	55	55	55	55	55	55	54	54	52	50	53	48	46	51	44	42	48	41	39	45	38	36	42	36	34
				Exposed	55	55	55	55	55	55	55	55	55	55	55	52	55	52	49	55	49	47	54	47	44	51	44	42	47	41	39	44	37	36	41	35	33	38	33	31	36	0	0	34	0	0
		4:12	18.4	Non-Exposed	59	59	59	59	59	59	59	59	59	59	59	59	59	59	59	59	59	59	59	59	57	59	57	54	57	52	49	55	48	45	51	44	42	47	41	39	45	38	36	42	36	34
				Exposed	59	59	59	59	59	58	59	58	55	59	55	52	59	52	49	56	49	47	53	47	44	51	44	42	47	41	39	44	37	35	40	35	33	38	32	0	35	0	0	34	0	0
		5:12	22.6	Non-Exposed	59	59		59	59		59	59		59	59		59	59		59	59		59	59		59	59		58	58		57	53		55	49		54	46		53	43		50	40	
				Exposed	59	59		59	59		59	59		59	59		59	58		59	55		59	52		59	50		57	45		52	42		48	38		45	36		41	34		39	32	
		6:12	26.6	Non-Exposed	60	60		60	60		60	60		60	60		60	60		60	60		60	60		60	60		59	58		58	53		56	49		55	46		53	43		50	40	
				Exposed	60	60		60	60		60	60		60	60		60	58		60	55		60	52		60	49		57	45		52	42		48	38		44	36		41	34		39	32	
		7:12	30.3	Non-Exposed	61	61	61	61	61	61	61	61	61	61	61	61	61	61	61	61	61	61	61	59	59	61	56	55	60	51	49	59	46	45	57	43	41	55	39	37	51	37	35	48	34	32
				Exposed	61	61	61	61	61	60	61	57	56	61	54	52	61	50	49	61	48	46	61	45	43	59	43	41	54	39	37	50	36	34	46	33	31	42	31	0	40	0	0	37	0	0
		8:12	33.7	Non-Exposed	63	63	63	63	63	63	63	63	63	63	63	63	63	63	63	63	62	62	63	59	58	63	56	55	62	51	49	60	46	45	59	43	41	54	39	37	51	37	34	47	34	32
				Exposed	63	63	63	63	61	60	63	57	56	63	53	52	63	50	49	63	48	46	62	45	43	59	43	41	54	39	37	49	36	34	46	33	31	42	31	0	40	0	0	37	0	0
		9:12	36.9	Non-Exposed	64	64	64	64	64	64	64	64	64	64	64	64	64	64	64	64	62	62	64	59	58	64	56	55	63	51	49	62	46	44	58	43	41	54	39	37	51	37	34	47	34	32
				Exposed	64	64	64	64	60	60	64	57	56	64	53	52	64	50	49	64	48	46	62	45	43	59	43	41	54	39	37	49	36	34	46	33	31	42	31	0	39	0	0	37	0	0
		10:12	39.8	Non-Exposed	66	66	66	66	66	66	66	66	66	66	66	66	66	65	66	66	62	62	66	59	58	66	56	55	65	50	49	63	46	44	58	42	40	54	39	37	50	37	34	47	34	32
				Exposed	66	64	64	66	60	60	66	56	56	66	53	52	66	50	49	65	47	46	61	45	43	59	43	41	53	39	37	49	36	34	45	33	31	42	31	0	39	0	0	37	0	0
		11:12	42.5	Non-Exposed	67	67	67	67	67	67	67	67	67	67	67	67	67	65	65	67	62	61	67	58	58	67	55	54	67	50	49	63	46	44	58	42	40	54	39	37	50	36	34	47	34	32
				Exposed	67	64	64	67	60	59	67	56	55	67	53	52	67	50	48	64	47	46	61	45	43	58	43	41	53	39	37	49	36	33	45	33	31	42	31	0	39	0	0	37	0	0
		12:12	45	Non-Exposed	69	69	69	69	69	69	69	69	69	69	69	69	69	65	65	69	61	61	69	58	58	69	55	54	68	50	49	63	46	44	58	42	40	54	39	37	50	36	34	47	34	32
				Exposed	69	64	64	69	60	59	69	56	55	69	53	52	68	50	48	64	47	46	61	45	43	58	43	41	53	39	37	49	35	33	45	33	31	42	31	0	39	0	0	37	0	0

Tamarack 2.3 Rail – Hip Flush-Mount on 30 Foot Maximum Mean Roof Height – Portrait – Panel Length = 80 Inches or Less

Ground Snow Load	Exposure Category	Roof Pitch	Roof Angle	Wind Speed (mph)	95			100			105			110			115			120			125			130			140			150			160			170			180			190		
				Roof Area	1	2	3	1	2	3	1	2	3	1	2	3	1	2	3	1	2	3	1	2	3	1	2	3	1	2	3	1	2	3	1	2	3	1	2	3	1	2	3	1	2	3
25	B	2:12	9.5	Non-Exposed	56	56	56	56	56	56	56	56	56	56	56	56	56	56	56	56	56	56	56	56	56	56	56	56	56	56	56	56	56	56	56	56	56	56	56	54	55	52	50	54	49	47
				Exposed	56	56	56	56	56	56	56	56	56	56	56	56	56	56	56	56	56	56	56	56	56	56	56	56	56	56	53	56	51	49	54	47	45	51	44	42	47	41	39	45	38	36
		3:12	14.0	Non-Exposed	54	54	54	54	54	54	54	54	54	54	54	54	54	54	54	54	54	54	54	54	54	54	54	54	54	54	54	54	54	54	54	54	54	54	54	53	53	52	50	53	49	47
				Exposed	54	54	54	54	54	54	54	54	54	54	54	54	54	54	54	54	54	54	54	54	54	54	54	54	54	54	53	54	51	48	54	47	45	50	44	42	47	41	39	44	38	36
		4:12	18.4	Non-Exposed	54	54	54	54	54	54	54	54	54	54	54	54	54	54	54	54	54	54	54	54	54	54	54	54	54	54	54	54	54	54	54	54	54	54	54	53	53	52	50	53	49	46
				Exposed	54	54	54	54	54	54	54	54	54	54	54	54	54	54	54	54	54	54	54	54	54	54	54	54	54	54	53	54	51	48	54	47	45	50	44	41	47	41	39	44	38	36
		5:12	22.6	Non-Exposed	55	55		55	55		55	55		55	55		55	55		55	55		55	55		55	55		55	55		55	55		55	55		55	55		54	54		53	53	
				Exposed	55	55		55	55		55	55		55	55		55	55		55	55		55	55		55	55		55	55		55	55		55	53		55	49		54	45		53	42	
		6:12	26.6	Non-Exposed	56	56		56	56		56	56		56	56		56	56		56	56		56	56		56	56		56	56		56	56		56	56		56	56		55	55		54	54	
				Exposed	56	56		56	56		56	56		56	56		56	56		56	56		56	56		56	56		56	56		56	56		56	52		56	49		55	45		53	42	
		7:12	30.3	Non-Exposed	57	57	57	57	57	57	57	57	57	57	57	57	57	57	57	57	57	57	57	57	57	57	57	57	57	57	57	57	57	57	57	57	57	57	55	54	56	51	50	55	47	46
				Exposed	57	57	57	57	57	57	57	57	57	57	57	57	57	57	57	57	57	57	57	57	57	57	57	57	57	54	53	57	50	48	57	46	44	57	42	40	54	39	37	51	36	34
		8:12	33.7	Non-Exposed	59	59	59	59	59	59	59	59	59	59	59	59	59	59	59	59	59	59	59	59	59	59	59	59	59	59	59	59	59	59	59	59	59	59	55	54	58	51	49	57	47	46
				Exposed	59	59	59	59	59	59	59	59	59	59	59	59	59	59	59	59	59	59	59	59	59	59	59	59	59	54	53	59	50	48	59	46	44	58	42	40	54	39	37	50	36	34
		9:12	36.9	Non-Exposed	60	60	60	60	60	60	60	60	60	60	60	60	60	60	60	60	60	60	60	60	60	60	60	60	60	60	60	60	60	60	60	59	59	60	55	54	59	51	49	58	47	46
				Exposed	60	60	60	60	60	60	60	60	60	60	60	60	60	60	60	60	60	60	60	60	60	60	60	59	60	54	53	60	49	48	60	45	44	58	42	40	54	39	37	50	36	34
		10:12	39.8	Non-Exposed	62	62	62	62	62	62	62	62	62	62	62	62	62	62	62	62	62	62	62	62	62	62	62	62	62	62	62	62	62	62	62	59	58	62	55	53	61	51	49	60	47	45
				Exposed	62	62	62	62	62	62	62	62	62	62	62	62	62	62	62	62	62	62	62	62	62	62	59	59	62	54	53	62	49	48	62	45	43	57	42	40	54	39	37	50	36	34
		11:12	42.5	Non-Exposed	64	64	64	64	64	64	64	64	64	64	64	64	64	64	64	64	64	64	64	64	64	64	64	64	64	64	64	64	64	64	64	59	58	64	54	53	63	50	49	62	47	45
				Exposed	64	64	64	64	64	64	64	64	64	64	64	64	64	64	64	64	64	64	64	62	62	64	59	59	64	54	53	64	49	48	62	45	43	57	42	40	53	39	37	50	36	34
		12:12	45	Non-Exposed	66	66	66	66	66	66	66	66	66	66	66	66	66	66	66	66	66	66	66	66	66	66	66	66	66	66	66	66	64	64	66	59	58	66	54	53	65	50	49	64	47	45
				Exposed	66	66	66	66	66	66	66	66	66	66	66	66	66	66	66	66	65	66	66	62	62	66	59	58	66	54	52	66	49	48	62	45	43	57	42	40	53	39	37	50	36	34
	C	2:12	9.5	Non-Exposed	56	56	56	56	56	56	56	56	56	56	56	56	56	56	56	56	56	56	56	56	56	56	56	56	56	56	55	55	53	51	54	49	47	52	46	43	49	42	40	46	40	38
				Exposed	56	56	56	56	56	56	56	56	56	56	56	56	56	56	55	56	55	52	56	52	49	56	49	47	52	45	43	48	41	39	45	38	36	42	36	34	39	33	32	37	32	0
		3:12	14.0	Non-Exposed	54	54	54	54	54	54	54	54	54	54	54	54	54	54	54	54	54	54	54	54	54	54	54	54	54	54	54	54	53	51	53	49	47	52	45	43	49	42	40	46	40	38
				Exposed	54	54	54	54	54	54	54	54	54	54	54	54	54	54	54	54	54	52	54	52	49	54	49	47	52	45	43	48	41	39	45	38	36	42	35	34	39	33	32	37	32	0
		4:12	18.4	Non-Exposed	54	54	54	54	54	54	54	54	54	54	54	54	54	54	54	54	54	54	54	54	54	54	54	54	54	54	54	54	53	50	53	49	47	52	45	43	49	42	40	46	40	38
				Exposed	54	54	54	54	54	54	54	54	54	54	54	54	54	54	54	54	54	52	54	52	49	54	49	47	52	45	43	48	41	39	44	38	36	42	35	34	39	33	32	37	32	0
		5:12	22.6	Non-Exposed	55	55		55	55		55	55		55	55		55	55		55	55		55	55		55	55		55	55		54	54		53	53		52	51		51	47		50	44	
				Exposed	55	55		55	55		55	55		55	55		55	55		55	55		55	55		55	55		55	55		55	50		54	46		53	43		49	40		46	37		43	35	
		6:12	26.6	Non-Exposed	56	56		56	56		56	56		56	56		56	56		56	56		56	56		56	56		56	56		55	55		54	54		53	51		52	47		51	44	
				Exposed	56	56		56	56		56	56		56	56		56	56		56	56		56	56		56	55		56	50		55	46		53	43		49	39		46	37		43	35	
25		7:12	30.3	Non-Exposed	57	57	57	57	57	57	57	57	57	57	57	57	57	57	57	57	57	57	57	57	57	57	57	57	57	57	56	57	52	51	55	48	46	54	44	42	53	41	39	52	38	36
				Exposed	57	57	57	57	57	57	57	57	57	57	57	57	57	56	56	57	53	52	57	51	49	57	48	46	57	44	42	55	40	38	51	37	34	47	34	32	44	32	0	41	0	0
		8:12	33.7	Non-Exposed	59	59	59	59	59	59	59	59	59	59	59	59	59	59	59	59	59	59	59	59	59	59	59	59	59	57	56	58	52	50	57	48	46	56	44	42	55	41	39	53	38	36
				Exposed	59	59	59	59	59	59	59	59	59	59	59	59	59	56	55	59	53	52	59	50	49	59	48	46	59	43	41	55	40	38	51	37	34	47	34	32	44	32	0	41	0	0
		9:12	36.9	Non-Exposed	60	60	60	60	60	60	60	60	60	60	60	60	60	60	60	60	60	60	60	60	60	60	60	60	60	56	56	60	52	50	58	47	46	57	44	42	56	41	39	52	38	36
				Exposed	60	60	60	60	60	60	60	60	60	60	59	59	60	56	55	60	53	52	60	50	49	60	48	46	59	43	41	55	40	38	50	37	34	47	34	32	44	32	0	41	0	0
		10:12	39.8	Non-Exposed	62	62	62	62	62	62	62	62	62	62	62	62	62	62	62	62	62	62	62	62	62	62	62	62	62	56	55	61	51	50	60	47	46	59	44	42	56	41	39	52	38	36
				Exposed	62	62	62	62	62	62	62	62	62	62	59	59	62	56	55	62	53	52	62	50	49	62	48	46	59	43	41	54	40	37	50	36	34	47	34	32	44	32	0	41	0	0
		11:12	42.5	Non-Exposed	64	64	64	64	64	64	64	64	64	64	64	64	64	64	64	64	64	64	64	64	64	64	62	62	64	56	55	63	51	50	62	47	46	60	44	42	56	41	39	52	38	36
				Exposed	64	64	64	64	64	64	64	63	63	64	59	59	64	56	55	64	53	51	64	50	49	64	48	46	59	43	41	54	40	37	50	36	34	47	34	32	44	32	0	41	0	0
		12:12	45	Non-Exposed	66	66	66	66	66	66	66	66	66	66	66	66	66	66	66	66	66	66	66	65	65	66	62	61	66	56	55	65	51	50	64	47	45	60	44	42	56	41	38	52	38	36
				Exposed	66	66	66	66	66	66	66	63	62	66	59	58	66	56	55	66	53	51	66	50	48	64	47	46	59	43	41	54	40	37	50	36	34	47	34	32	44	32	0	41	0	0
	D	2:12	9.5	Non-Exposed	56	56	56	56	56	56	56	56	56	56	56	56	56	56	56	56	56	56	56	56	56	56	56	55	55	52	50	54	48	46	51	44	42	48	41	39	45	38	36	42	36	34
				Exposed	56	56	56	56	56	56	56	56	55	56	55	52	56	52	49	56	49	47	54	47	45	51	45	42	47	41	39	44	37	36	41	35	33	38	33	31	36	0	0	34	0	0
		3:12	14.0	Non-Exposed	54	54	54	54	54	54	54	54	54	54	54	54	54	54	54	54	54	54	54	54	54	54	54	54	53	52	50	52	48	46	51	44	42	48	41	39	45	38	36	42	36	34
				Exposed	54	54	54	54	54	54	54	54	54	54	54	52	54	52	49	54	49	47	54	47	44	51	44	42	47	41	39	44	37	36	41	35	33	38	33	31	36	0	0	34	0	0
		4:12	18.4	Non-Exposed	54	54	54	54	54	54	54	54	54	54	54	54	54	54	54	54	54	54	54	54	54	54	54	54	53	52	49	52	48	45	51	44	42	47	41	39	45	38	36	42	36	34
				Exposed	54	54	54	54	54	54	54	54	54	54	54	52	54	52	49	54	49	47	53	47	44	51	44	42	47	41	39	44	37	35	40	35	33	38	32	0	35	0	0	34	0	0
		5:12	22.6	Non-Exposed	55	55		55	55		55	55		55	55		55	55		55	55		55	55		55	55		54	54		53	53		52	49		51	46		50	43		48	40	
				Exposed	55	55		55	55		55	55		55	55		55	55		55	55		55	52		55	50		54	45		52	42		48	38		45	36		41	34		39	32	
		6:12	26.6	Non-Exposed	56	56		56	56		56	56		56	56		56	56		56	56		56	56		56	56		55	55		54	53		53	49		52	46		50	43		49	40	
				Exposed	56	56		56	56		56	56		56	56		56	56		56	55		56	52		56	49		55	45		52	42		48	38		44	36		41	34		39	32	
		7:12	30.3	Non-Exposed	57	57	57	57	57	57	57	57	57	57	57	57	57	57	57	57	57	57	57	57	57	57	56	55	56	51	49	55	46	45	54	43	41	53	39	37	51	37	35	48	34	32
				Exposed	57	57	57	57	57	57	57	57	56	57	54	52	57	50	49	57	48	46	57	45	43	57	43	41	54	39	37	50	36	34	46	33	31	42	31	0	40	0	0	37	0	0
		8:12	33.7	Non-Exposed	59	59	59	59	59	59	59	59	59	59	59	59	59	59	59	59	59	59	59	59	58	59	56	55	58	51	49	57	46	45	55	43	41	54	39	37	51	37	34	47	34	32
				Exposed	59	59	59	59	59	59	59	57	56	59	53	52	59	50	49	59	48	46	59	45	43	59	43	41	54	39	37	49	36	34	46	33	31	42	31	0	40	0	0	37	0	0
		9:12	36.9	Non-Exposed	60	60	60	60	60	60	60	60	60	60	60	60	60	60	60	60	60	60	60	59	58	60	56	55	59	51	49	58	46	44	57	43	41	54	39	37	51	37	34	47	34	32
				Exposed	60	60	60	60	60	60	60	57	56	60	53	52	60	50	49	60	48	46	60	45	43	59	43	41	54	39	37	49	36	34	46	33	31	42	31	0	39	0	0	37	0	0
		10:12	39.8	Non-Exposed	62	62	62	62	62	62	62	62	62	62	62	62	62	62	62	62	62	62	62	59	58	62	56	55	61	50	49	60	46	44	58	42	40	54	39	37	50	37	34	47	34	32
				Exposed	62	62	62	62	60	60	62	56	56	62	53	52	62	50	49	62	47	46	61	45	43	59	43	41	53	39	37	49	36	34	45	33	31	42	31	0	39	0	0	37	0	0
		11:12	42.5	Non-Exposed	64	64	64	64	64	64	64	64	64	64	64	64	64	64	64	64	62	61	64	58	58	64	55	54	63	50	49	61	46	44	58	42	40	54	39	37	50	36	34	47	34	32
				Exposed	64	64	64	64	60	59	64	56	55	64	53	52	64	50	48	64	47	46	61	45	43	58	43	41	53	39	37	49	36	33	45	33	31	42	31	0	39	0	0	37	0	0
		12:12	45	Non-Exposed	66	66	66	66	66	66	66	66	66	66	66	66	66	65	65	66	61	61	66	58	58	66	55	54	65	50	49	63	46	44	58	42	40	54	39	37	50	36	34	47	34	32
				Exposed	66	64	64	66	60	59	66	56	55	66	53	52	66	50	48	64	47	46	61	45	43	58	43	41	53	39	37	49	35	33	45	33	31	42	31	0	39	0	0	37	0	0

Tamarack 2.3 Rail – Hip Flush-Mount on 30 Foot Maximum Mean Roof Height – Portrait – Panel Length = 80 Inches or Less

Ground Snow Load	Exposure Category	Roof Pitch	Roof Angle	Wind Speed (mph)	95			100			105			110			115			120			125			130			140			150			160			170			180			190		
				Roof Area	1	2	3	1	2	3	1	2	3	1	2	3	1	2	3	1	2	3	1	2	3	1	2	3	1	2	3	1	2	3	1	2	3	1	2	3	1	2	3	1	2	3
30	B	2:12	9.5	Non-Exposed	52	52	52	52	52	52	52	52	52	52	52	52	52	52	52	52	52	52	52	52	52	52	52	52	52	52	52	52	52	52	52	52	52	52	52	52	52	52	50	51	49	47
				Exposed	52	52	52	52	52	52	52	52	52	52	52	52	52	52	52	52	52	52	52	52	52	52	52	52	52	52	52	52	51	49	52	47	45	51	44	42	47	41	39	45	38	36
		3:12	14.0	Non-Exposed	50	50	50	50	50	50	50	50	50	50	50	50	50	50	50	50	50	50	50	50	50	50	50	50	50	50	50	50	50	50	50	50	50	50	50	50	50	50	50	49	49	47
				Exposed	50	50	50	50	50	50	50	50	50	50	50	50	50	50	50	50	50	50	50	50	50	50	50	50	50	50	50	50	50	48	50	47	45	50	44	42	47	41	39	44	38	36
		4:12	18.4	Non-Exposed	50	50	50	50	50	50	50	50	50	50	50	50	50	50	50	50	50	50	50	50	50	50	50	50	50	50	50	50	50	50	50	50	50	50	50	50	50	50	50	49	49	46
				Exposed	50	50	50	50	50	50	50	50	50	50	50	50	50	50	50	50	50	50	50	50	50	50	50	50	50	50	50	50	50	48	50	47	45	50	44	41	47	41	39	44	38	36
		5:12	22.6	Non-Exposed	51	51		51	51		51	51		51	51		51	51		51	51		51	51		51	51		51	51		51	51		51	51		51	51		51	51		50	50	
				Exposed	51	51		51	51		51	51		51	51		51	51		51	51		51	51		51	51		51	51		51	51		51	51		51	49		51	45		50	42	
		6:12	26.6	Non-Exposed	52	52		52	52		52	52		52	52		52	52		52	52		52	52		52	52		52	52		52	52		52	52		52	52		52	52		51	51	
				Exposed	52	52		52	52		52	52		52	52		52	52		52	52		52	52		52	52		52	52		52	52		52	52		52	49		52	45		51	42	
		7:12	30.3	Non-Exposed	54	54	54	54	54	54	54	54	54	54	54	54	54	54	54	54	54	54	54	54	54	54	54	54	54	54	54	54	54	54	54	54	54	54	54	54	53	51	50	52	47	46
				Exposed	54	54	54	54	54	54	54	54	54	54	54	54	54	54	54	54	54	54	54	54	54	54	54	54	54	54	53	54	50	48	54	46	44	54	42	40	53	39	37	51	36	34
		8:12	33.7	Non-Exposed	56	56	56	56	56	56	56	56	56	56	56	56	56	56	56	56	56	56	56	56	56	56	56	56	56	56	56	56	56	56	56	56	56	55	55	54	55	51	49	54	47	46
				Exposed	56	56	56	56	56	56	56	56	56	56	56	56	56	56	56	56	56	56	56	56	56	56	56	56	56	54	53	56	50	48	56	46	44	55	42	40	54	39	37	50	36	34
		9:12	36.9	Non-Exposed	57	57	57	57	57	57	57	57	57	57	57	57	57	57	57	57	57	57	57	57	57	57	57	57	57	57	57	57	57	57	57	57	57	57	55	54	56	51	49	55	47	46
				Exposed	57	57	57	57	57	57	57	57	57	57	57	57	57	57	57	57	57	57	57	57	57	57	57	57	57	54	53	57	49	48	57	45	44	57	42	40	54	39	37	50	36	34
		10:12	39.8	Non-Exposed	59	59	59	59	59	59	59	59	59	59	59	59	59	59	59	59	59	59	59	59	59	59	59	59	59	59	59	59	59	59	59	59	58	59	55	53	58	51	49	57	47	45
				Exposed	59	59	59	59	59	59	59	59	59	59	59	59	59	59	59	59	59	59	59	59	59	59	59	59	59	54	53	59	49	48	59	45	43	57	42	40	54	39	37	50	36	34
		11:12	42.5	Non-Exposed	61	61	61	61	61	61	61	61	61	61	61	61	61	61	61	61	61	61	61	61	61	61	61	61	61	61	61	61	61	61	61	59	58	61	54	53	60	50	49	59	47	45
				Exposed	61	61	61	61	61	61	61	61	61	61	61	61	61	61	61	61	61	61	61	61	61	61	59	59	61	54	53	61	49	48	61	45	43	57	42	40	53	39	37	50	36	34
		12:12	45	Non-Exposed	63	63	63	63	63	63	63	63	63	63	63	63	63	63	63	63	63	63	63	63	63	63	63	63	63	63	63	63	63	63	63	59	58	63	54	53	62	50	49	61	47	45
				Exposed	63	63	63	63	63	63	63	63	63	63	63	63	63	63	63	63	63	63	63	62	62	63	59	58	63	54	52	63	49	48	62	45	43	57	42	40	53	39	37	50	36	34
	C	2:12	9.5	Non-Exposed	52	52	52	52	52	52	52	52	52	52	52	52	52	52	52	52	52	52	52	52	52	52	52	52	52	52	52	52	52	51	51	49	47	50	46	43	49	42	40	46	40	38
				Exposed	52	52	52	52	52	52	52	52	52	52	52	52	52	52	52	52	52	52	52	52	49	52	49	47	52	45	43	48	41	39	45	38	36	42	36	34	39	33	32	37	32	0
		3:12	14.0	Non-Exposed	50	50	50	50	50	50	50	50	50	50	50	50	50	50	50	50	50	50	50	50	50	50	50	50	50	50	50	50	50	50	49	49	47	49	45	43	48	42	40	46	40	38
				Exposed	50	50	50	50	50	50	50	50	50	50	50	50	50	50	50	50	50	50	50	50	49	50	49	47	50	45	43	48	41	39	45	38	36	42	35	34	39	33	32	37	32	0
		4:12	18.4	Non-Exposed	50	50	50	50	50	50	50	50	50	50	50	50	50	50	50	50	50	50	50	50	50	50	50	50	50	50	50	50	50	50	49	49	47	49	45	43	48	42	40	46	40	38
				Exposed	50	50	50	50	50	50	50	50	50	50	50	50	50	50	50	50	50	50	50	50	49	50	49	47	50	45	43	48	41	39	44	38	36	42	35	34	39	33	32	37	32	0
		5:12	22.6	Non-Exposed	51	51		51	51		51	51		51	51		51	51		51	51		51	51		51	51		51	51		51	51		50	50		49	49		48	47		47	44	
				Exposed	51	51		51	51		51	51		51	51		51	51		51	51		51	51		51	51		51	50		51	46		50	43		49	40		46	37		43	35	
		6:12	26.6	Non-Exposed	52	52		52	52		52	52		52	52		52	52		52	52		52	52		52	52		52	52		52	52		51	51		50	50		49	47		48	44	
				Exposed	52	52		52	52		52	52		52	52		52	52		52	52		52	52		52	52		52	50		52	46		51	43		49	39		46	37		43	35	
30		7:12	30.3	Non-Exposed	54	54	54	54	54	54	54	54	54	54	54	54	54	54	54	54	54	54	54	54	54	54	54	54	54	54	54	53	52	51	52	48	46	51	44	42	50	41	39	49	38	36
				Exposed	54	54	54	54	54	54	54	54	54	54	54	54	54	54	54	54	53	52	54	51	49	54	48	46	54	44	42	53	40	38	51	37	34	47	34	32	44	32	0	41	0	0
		8:12	33.7	Non-Exposed	56	56	56	56	56	56	56	56	56	56	56	56	56	56	56	56	56	56	56	56	56	56	56	56	56	56	56	55	52	50	54	48	46	53	44	42	52	41	39	51	38	36
				Exposed	56	56	56	56	56	56	56	56	56	56	56	56	56	56	55	56	53	52	56	50	49	56	48	46	56	43	41	55	40	38	51	37	34	47	34	32	44	32	0	41	0	0
		9:12	36.9	Non-Exposed	57	57	57	57	57	57	57	57	57	57	57	57	57	57	57	57	57	57	57	57	57	57	57	57	57	56	56	57	52	50	55	47	46	54	44	42	53	41	39	52	38	36
				Exposed	57	57	57	57	57	57	57	57	57	57	57	57	57	56	55	57	53	52	57	50	49	57	48	46	57	43	41	55	40	38	50	37	34	47	34	32	44	32	0	41	0	0
		10:12	39.8	Non-Exposed	59	59	59	59	59	59	59	59	59	59	59	59	59	59	59	59	59	59	59	59	59	59	59	59	59	56	55	58	51	50	57	47	46	56	44	42	55	41	39	52	38	36
				Exposed	59	59	59	59	59	59	59	59	59	59	59	59	59	56	55	59	53	52	59	50	49	59	48	46	59	43	41	54	40	37	50	36	34	47	34	32	44	32	0	41	0	0
		11:12	42.5	Non-Exposed	61	61	61	61	61	61	61	61	61	61	61	61	61	61	61	61	61	61	61	61	61	61	61	61	61	56	55	60	51	50	59	47	46	58	44	42	56	41	39	52	38	36
				Exposed	61	61	61	61	61	61	61	61	61	61	59	59	61	56	55	61	53	51	61	50	49	61	48	46	59	43	41	54	40	37	50	36	34	47	34	32	44	32	0	41	0	0
		12:12	45	Non-Exposed	63	63	63	63	63	63	63	63	63	63	63	63	63	63	63	63	63	63	63	63	63	63	62	61	63	56	55	62	51	50	61	47	45	59	44	42	56	41	38	52	38	36
				Exposed	63	63	63	63	63	63	63	63	62	63	59	58	63	56	55	63	53	51	63	50	48	63	47	46	59	43	41	54	40	37	50	36	34	47	34	32	44	32	0	41	0	0
	D	2:12	9.5	Non-Exposed	52	52	52	52	52	52	52	52	52	52	52	52	52	52	52	52	52	52	52	52	52	52	52	52	52	52	50	51	48	46	50	44	42	48	41	39	45	38	36	42	36	34
				Exposed	52	52	52	52	52	52	52	52	52	52	52	52	52	52	49	52	49	47	52	47	45	51	45	42	47	41	39	44	37	36	41	35	33	38	33	31	36	0	0	34	0	0
		3:12	14.0	Non-Exposed	50	50	50	50	50	50	50	50	50	50	50	50	50	50	50	50	50	50	50	50	50	50	50	50	50	50	50	49	48	46	48	44	42	47	41	39	45	38	36	42	36	34
				Exposed	50	50	50	50	50	50	50	50	50	50	50	50	50	50	49	50	49	47	50	47	44	50	44	42	47	41	39	44	37	36	41	35	33	38	33	31	36	0	0	34	0	0
		4:12	18.4	Non-Exposed	50	50	50	50	50	50	50	50	50	50	50	50	50	50	50	50	50	50	50	50	50	50	50	50	50	50	49	49	48	45	48	44	42	47	41	39	45	38	36	42	36	34
				Exposed	50	50	50	50	50	50	50	50	50	50	50	50	50	50	49	50	49	47	50	47	44	50	44	42	47	41	39	44	37	35	40	35	33	38	32	0	35	0	0	34	0	0
		5:12	22.6	Non-Exposed	51	51		51	51		51	51		51	51		51	51		51	51		51	51		51	51		51	51		50	50		49	49		48	46		47	43		46	40	
				Exposed	51	51		51	51		51	51		51	51		51	51		51	51		51	51		51	50		51	45		50	42		48	38		45	36		41	34		39	32	
		6:12	26.6	Non-Exposed	52	52		52	52		52	52		52	52		52	52		52	52		52	52		52	52		52	52		51	51		50	49		49	46		48	43		47	40	
				Exposed	52	52		52	52		52	52		52	52		52	52		52	52		52	52		52	49		52	45		51	42		48	38		44	36		41	34		39	32	
		7:12	30.3	Non-Exposed	54	54	54	54	54	54	54	54	54	54	54	54	54	54	54	54	54	54	54	54	54	54	54	54	53	51	49	52	46	45	51	43	41	50	39	37	49	37	35	48	34	32
				Exposed	54	54	54	54	54	54	54	54	54	54	54	52	54	50	49	54	48	46	54	45	43	54	43	41	53	39	37	50	36	34	46	33	31	42	31	0	40	0	0	37	0	0
		8:12	33.7	Non-Exposed	56	56	56	56	56	56	56	56	56	56	56	56	56	56	56	56	56	56	56	56	56	56	56	55	55	51	49	53	46	45	52	43	41	51	39	37	50	37	34	47	34	32
				Exposed	56	56	56	56	56	56	56	56	56	56	53	52	56	50	49	56	48	46	56	45	43	56	43	41	54	39	37	49	36	34	46	33	31	42	31	0	40	0	0	37	0	0
		9:12	36.9	Non-Exposed	57	57	57	57	57	57	57	57	57	57	57	57	57	57	57	57	57	57	57	57	57	57	56	55	56	51	49	55	46	44	54	43	41	53	39	37	51	37	34	47	34	32
				Exposed	57	57	57	57	57	57	57	57	56	57	53	52	57	50	49	57	48	46	57	45	43	57	43	41	54	39	37	49	36	34	46	33	31	42	31	0	39	0	0	37	0	0
		10:12	39.8	Non-Exposed	59	59	59	59	59	59	59	59	59	59	59	59	59	59	59	59	59	59	59	59	58	59	56	55	58	50	49	57	46	44	55	42	40	54	39	37	50	37	34	47	34	32
				Exposed	59	59	59	59	59	59	59	56	56	59	53	52	59	50	49	59	47	46	59	45	43	59	43	41	53	39	37	49	36	34	45	33	31	42	31	0	39	0	0	37	0	0
		11:12	42.5	Non-Exposed	61	61	61	61	61	61	61	61	61	61	61	61	61	61	61	61	61	61	61	58	58	61	55	54	60	50	49	59	46	44	57	42	40	54	39	37	50	36	34	47	34	32
				Exposed	61	61	61	61	60	59	61	56	55	61	53	52	61	50	48	61	47	46	61	45	43	58	43	41	53	39	37	49	36	33	45	33	31	42	31	0	39	0	0	37	0	0
		12:12	45	Non-Exposed	63	63	63	63	63	63	63	63	63	63	63	63	63	63	63	63	61	61	63	58	58	63	55	54	62	50	49	60	46	44	58	42	40	54	39	37	50	36	34	47	34	32
				Exposed	63	63	63	63	60	59	63	56	55	63	53	52	63	50	48	63	47	46	61	45	43	58	43	41	53	39	37	49	35	33	45	33	31	42	31	0	39	0	0	37	0	0

Tamarack 2.3 Rail – Hip Flush-Mount on 30 Foot Maximum Mean Roof Height – Portrait – Panel Length = 80 Inches or Less

Ground Snow Load	Exposure Category	Roof Pitch	Roof Angle	Wind Speed (mph)	95			100			105			110			115			120			125			130			140			150			160			170			180			190		
				Roof Area	1	2	3	1	2	3	1	2	3	1	2	3	1	2	3	1	2	3	1	2	3	1	2	3	1	2	3	1	2	3	1	2	3	1	2	3	1	2	3	1	2	3
35	B	2:12	9.5	Non-Exposed	48	48	48	48	48	48	48	48	48	48	48	48	48	48	48	48	48	48	48	48	48	48	48	48	48	48	48	48	48	48	48	48	48	48	48	48	48	48	48	48	48	47
				Exposed	48	48	48	48	48	48	48	48	48	48	48	48	48	48	48	48	48	48	48	48	48	48	48	48	48	48	48	48	48	48	48	47	45	48	44	42	47	41	39	45	38	36
		3:12	14.0	Non-Exposed	46	46	46	46	46	46	46	46	46	46	46	46	46	46	46	46	46	46	46	46	46	46	46	46	46	46	46	46	46	46	46	46	46	46	46	46	46	46	46	46	46	46
				Exposed	46	46	46	46	46	46	46	46	46	46	46	46	46	46	46	46	46	46	46	46	46	46	46	46	46	46	46	46	46	46	46	46	45	46	44	42	46	41	39	44	38	36
		4:12	18.4	Non-Exposed	46	46	46	46	46	46	46	46	46	46	46	46	46	46	46	46	46	46	46	46	46	46	46	46	46	46	46	46	46	46	46	46	46	46	46	46	46	46	46	46	46	46
				Exposed	46	46	46	46	46	46	46	46	46	46	46	46	46	46	46	46	46	46	46	46	46	46	46	46	46	46	46	46	46	46	46	46	45	46	44	41	46	41	39	44	38	36
		5:12	22.6	Non-Exposed	47	47		47	47		47	47		47	47		47	47		47	47		47	47		47	47		47	47		47	47		47	47		47	47		47	47		47	47	
				Exposed	47	47		47	47		47	47		47	47		47	47		47	47		47	47		47	47		47	47		47	47		47	47		47	47		47	45		47	42	
		6:12	26.6	Non-Exposed	48	48		48	48		48	48		48	48		48	48		48	48		48	48		48	48		48	48		48	48		48	48		48	48		48	48		48	48	
				Exposed	48	48		48	48		48	48		48	48		48	48		48	48		48	48		48	48		48	48		48	48		48	48		48	48		48	45		48	42	
		7:12	30.3	Non-Exposed	50	50	50	50	50	50	50	50	50	50	50	50	50	50	50	50	50	50	50	50	50	50	50	50	50	50	50	50	50	50	50	50	50	50	50	50	50	50	50	47	46
				Exposed	50	50	50	50	50	50	50	50	50	50	50	50	50	50	50	50	50	50	50	50	50	50	50	50	50	50	50	50	50	48	50	46	44	50	42	40	50	39	37	50	36	34
		8:12	33.7	Non-Exposed	52	52	52	52	52	52	52	52	52	52	52	52	52	52	52	52	52	52	52	52	52	52	52	52	52	52	52	52	52	52	52	52	52	52	52	52	51	49	51	47	46
				Exposed	52	52	52	52	52	52	52	52	52	52	52	52	52	52	52	52	52	52	52	52	52	52	52	52	52	52	52	52	50	48	52	46	44	52	42	40	52	39	37	50	36	34
		9:12	36.9	Non-Exposed	54	54	54	54	54	54	54	54	54	54	54	54	54	54	54	54	54	54	54	54	54	54	54	54	54	54	54	54	54	54	54	54	54	54	54	54	51	49	53	47	46
				Exposed	54	54	54	54	54	54	54	54	54	54	54	54	54	54	54	54	54	54	54	54	54	54	54	53	54	54	53	54	49	48	54	45	44	54	42	40	54	39	37	50	36	34
		10:12	39.8	Non-Exposed	56	56	56	56	56	56	56	56	56	56	56	56	56	56	56	56	56	56	56	56	56	56	56	56	56	56	56	56	56	56	56	56	56	56	55	53	55	51	49	55	47	45
				Exposed	56	56	56	56	56	56	56	56	56	56	56	56	56	56	56	56	56	56	56	56	56	56	56	56	56	54	53	56	49	48	56	45	43	56	42	40	54	39	37	50	36	34
		11:12	42.5	Non-Exposed	58	58	58	58	58	58	58	58	58	58	58	58	58	58	58	58	58	58	58	58	58	58	58	58	58	58	58	58	58	58	58	58	58	58	54	53	57	50	49	56	47	45
				Exposed	58	58	58	58	58	58	58	58	58	58	58	58	58	58	58	58	58	58	58	58	58	58	58	58	58	54	53	58	49	48	58	45	43	57	42	40	53	39	37	50	36	34
		12:12	45	Non-Exposed	60	60	60	60	60	60	60	60	60	60	60	60	60	60	60	60	60	60	60	60	60	60	60	60	60	60	60	60	60	60	60	59	58	60	54	53	59	50	49	58	47	45
				Exposed	60	60	60	60	60	60	60	60	60	60	60	60	60	60	60	60	60	60	60	60	60	60	59	58	60	54	52	60	49	48	60	45	43	57	42	40	53	39	37	50	36	34
	C	2:12	9.5	Non-Exposed	48	48	48	48	48	48	48	48	48	48	48	48	48	48	48	48	48	48	48	48	48	48	48	48	48	48	48	48	48	48	48	48	48	48	46	43	47	42	40	46	40	38
				Exposed	48	48	48	48	48	48	48	48	48	48	48	48	48	48	48	48	48	48	48	48	48	48	48	47	48	45	43	48	41	39	45	38	36	42	36	34	39	33	32	37	32	0
		3:12	14.0	Non-Exposed	46	46	46	46	46	46	46	46	46	46	46	46	46	46	46	46	46	46	46	46	46	46	46	46	46	46	46	46	46	46	46	46	46	46	45	43	45	42	40	45	40	38
				Exposed	46	46	46	46	46	46	46	46	46	46	46	46	46	46	46	46	46	46	46	46	46	46	46	46	46	45	43	46	41	39	45	38	36	42	35	34	39	33	32	37	32	0
		4:12	18.4	Non-Exposed	46	46	46	46	46	46	46	46	46	46	46	46	46	46	46	46	46	46	46	46	46	46	46	46	46	46	46	46	46	46	46	46	46	46	45	43	45	42	40	45	40	38
				Exposed	46	46	46	46	46	46	46	46	46	46	46	46	46	46	46	46	46	46	46	46	46	46	46	46	46	45	43	46	41	39	44	38	36	42	35	34	39	33	32	37	32	0
		5:12	22.6	Non-Exposed	47	47		47	47		47	47		47	47		47	47		47	47		47	47		47	47		47	47		47	47		47	47		47	47		46	44		45	44	
				Exposed	47	47		47	47		47	47		47	47		47	47		47	47		47	47		47	47		47	46		47	43		47	40		46	37		43	35				
		6:12	26.6	Non-Exposed	48	48		48	48		48	48		48	48		48	48		48	48		48	48		48	48		48	48		48	48		48	48		48	48		47	47		46	44	
				Exposed	48	48		48	48		48	48		48	48		48	48		48	48		48	48		48	48		48	46		48	43		48	39		46	37		43	35				
		7:12	30.3	Non-Exposed	50	50	50	50	50	50	50	50	50	50	50	50	50	50	50	50	50	50	50	50	50	50	50	50	50	50	50	50	50	50	50	48	46	49	44	42	48	41	39	47	38	36
				Exposed	50	50	50	50	50	50	50	50	50	50	50	50	50	50	50	50	50	50	50	50	49	50	48	46	50	44	42	50	40	38	50	37	34	47	34	32	44	32	0	41	0	0
		8:12	33.7	Non-Exposed	52	52	52	52	52	52	52	52	52	52	52	52	52	52	52	52	52	52	52	52	52	52	52	52	52	52	52	52	52	50	51	48	46	50	44	42	49	41	39	48	38	36
				Exposed	52	52	52	52	52	52	52	52	52	52	52	52	52	52	52	52	52	52	52	52	49	52	48	46	52	43	41	52	40	38	51	37	34	47	34	32	44	32	0	41	0	0
		9:12	36.9	Non-Exposed	54	54	54	54	54	54	54	54	54	54	54	54	54	54	54	54	54	54	54	54	54	54	54	54	54	54	54	54	52	50	53	47	46	52	44	42	51	41	39	50	38	36
				Exposed	54	54	54	54	54	54	54	54	54	54	54	54	54	54	54	54	53	52	54	50	49	54	48	46	54	43	41	54	40	38	50	37	34	47	34	32	44	32	0	41	0	0
		10:12	39.8	Non-Exposed	56	56	56	56	56	56	56	56	56	56	56	56	56	56	56	56	56	56	56	56	56	56	56	56	56	56	55	56	51	50	55	47	46	54	44	42	52	41	39	51	38	36
				Exposed	56	56	56	56	56	56	56	56	56	56	56	56	56	56	55	56	53	52	56	50	49	56	48	46	56	43	41	54	40	37	50	36	34	47	34	32	44	32	0	41	0	0
		11:12	42.5	Non-Exposed	58	58	58	58	58	58	58	58	58	58	58	58	58	58	58	58	58	58	58	58	58	58	58	58	58	56	55	58	51	50	56	47	46	55	44	42	54	41	39	52	38	36
				Exposed	58	58	58	58	58	58	58	58	58	58	58	58	58	56	55	58	53	51	58	50	49	58	48	46	58	43	41	54	40	37	50	36	34	47	34	32	44	32	0	41	0	0
		12:12	45	Non-Exposed	60	60	60	60	60	60	60	60	60	60	60	60	60	60	60	60	60	60	60	60	60	60	60	60	60	56	55	60	51	50	58	47	45	57	44	42	56	41	38	52	38	36
				Exposed	60	60	60	60	60	60	60	60	60	60	59	58	60	56	55	60	53	51	60	50	48	60	47	46	59	43	41	54	40	37	50	36	34	47	34	32	44	32	0	41	0	0
	D	2:12	9.5	Non-Exposed	48	48	48	48	48	48	48	48	48	48	48	48	48	48	48	48	48	48	48	48	48	48	48	48	48	48	48	48	48	46	47	44	42	46	41	39	45	38	36	42	36	34
				Exposed	48	48	48	48	48	48	48	48	48	48	48	48	48	48	48	48	48	47	48	47	45	48	45	42	47	41	39	44	37	36	41	35	33	38	33	31	36	0	0	34	0	0
		3:12	14.0	Non-Exposed	46	46	46	46	46	46	46	46	46	46	46	46	46	46	46	46	46	46	46	46	46	46	46	46	46	46	46	46	46	46	46	44	42	45	41	39	44	38	36	42	36	34
				Exposed	46	46	46	46	46	46	46	46	46	46	46	46	46	46	46	46	46	46	46	46	44	46	44	42	46	41	39	44	37	36	41	35	33	38	33	31	36	0	0	34	0	0
		4:12	18.4	Non-Exposed	46	46	46	46	46	46	46	46	46	46	46	46	46	46	46	46	46	46	46	46	46	46	46	46	46	46	46	46	46	45	46	44	42	45	41	39	44	38	36	42	36	34
				Exposed	46	46	46	46	46	46	46	46	46	46	46	46	46	46	46	46	46	46	46	46	44	46	44	42	46	41	39	44	37	35	40	35	33	38	32	0	35	0	0	34	0	0
		5:12	22.6	Non-Exposed	47	47		47	47		47	47		47	47		47	47		47	47		47	47		47	47		47	47		47	47		46	46		46	46		45	43		44	40	
				Exposed	47	47		47	47		47	47		47	47		47	47		47	47		47	47		47	47		47	45		47	42		46	38		45	36		41	34		39	32	
		6:12	26.6	Non-Exposed	48	48		48	48		48	48		48	48		48	48		48	48		48	48		48	48		48	48		48	48		47	47		46	46		46	43		45	40	
				Exposed	48	48		48	48		48	48		48	48		48	48		48	48		48	48		48	48		48	45		48	42		47	38		44	36		41	34		39	32	
		7:12	30.3	Non-Exposed	50	50	50	50	50	50	50	50	50	50	50	50	50	50	50	50	50	50	50	50	50	50	50	50	50	50	49	49	46	45	49	43	41	48	39	37	47	37	35	46	34	32
				Exposed	50	50	50	50	50	50	50	50	50	50	50	50	50	50	49	50	48	46	50	45	43	50	43	41	50	39	37	49	36	34	46	33	31	42	31	0	40	0	0	37	0	0
		8:12	33.7	Non-Exposed	52	52	52	52	52	52	52	52	52	52	52	52	52	52	52	52	52	52	52	52	52	52	52	52	52	51	49	51	46	45	50	43	41	49	39	37	48	37	34	47	34	32
				Exposed	52	52	52	52	52	52	52	52	52	52	52	52	52	50	49	52	48	46	52	45	43	52	43	41	52	39	37	49	36	34	46	33	31	42	31	0	40	0	0	37	0	0
		9:12	36.9	Non-Exposed	54	54	54	54	54	54	54	54	54	54	54	54	54	54	54	54	54	54	54	54	54	54	54	54	54	51	49	53	46	44	51	43	41	50	39	37	49	37	34	47	34	32
				Exposed	54	54	54	54	54	54	54	54	54	54	53	52	54	50	49	54	48	46	54	45	43	54	43	41	54	39	37	49	36	34	46	33	31	42	31	0	39	0	0	37	0	0
		10:12	39.8	Non-Exposed	56	56	56	56	56	56	56	56	56	56	56	56	56	56	56	56	56	56	56	56	56	56	56	55	55	50	49	54	46	44	53	42	40	52	39	37	50	37	34	47	34	32
				Exposed	56	56	56	56	56	56	56	56	56	56	53	52	56	50	49	56	47	46	56	45	43	56	43	41	53	39	37	49	36	34	45	33	31	42	31	0	39	0	0	37	0	0
		11:12	42.5	Non-Exposed	58	58	58	58	58	58	58	58	58	58	58	58	58	58	58	58	58	58	58	58	58	58	55	54	57	50	49	56	46	44	55	42	40	54	39	37	50	36	34	47	34	32
				Exposed	58	58	58	58	58	58	58	56	55	58	53	52	58	50	48	58	47	46	58	45	43	58	43	41	53	39	37	49	36	33	45	33	31	42	31	0	39	0	0	37	0	0
		12:12	45	Non-Exposed	60	60	60	60	60	60	60	60	60	60	60	60	60	60	60	60	60	60	60	58	58	60	55	54	59	50	49	58	46	44	57	42	40	54	39	37	50	36	34	47	34	32
				Exposed	60	60	60	60	60	59	60	56	55	60	53	52	60	50	48	60	47	46	60	45	43	58	43	41	53	39	37	49	35	33	45	33	31	42	31	0	39	0	0	37	0	0

Tamarack 2.3 Rail – Hip Flush-Mount on 30 Foot Maximum Mean Roof Height – Portrait – Panel Length = 80 Inches or Less

Ground Snow Load	Exposure Category	Roof Pitch	Roof Angle	Wind Speed (mph)	95			100			105			110			115			120			125			130			140			150			160			170			180			190		
				Roof Area	1	2	3	1	2	3	1	2	3	1	2	3	1	2	3	1	2	3	1	2	3	1	2	3	1	2	3	1	2	3	1	2	3	1	2	3	1	2	3	1	2	3
40	B	2:12	9.5	Non-Exposed	45	45	45	45	45	45	45	45	45	45	45	45	45	45	45	45	45	45	45	45	45	45	45	45	45	45	45	45	45	45	45	45	45	45	45	45	45	45	45	45	45	45
				Exposed	45	45	45	45	45	45	45	45	45	45	45	45	45	45	45	45	45	45	45	45	45	45	45	45	45	45	45	45	45	45	45	45	45	45	44	42	45	41	39	45	38	36
		3:12	14.0	Non-Exposed	43	43	43	43	43	43	43	43	43	43	43	43	43	43	43	43	43	43	43	43	43	43	43	43	43	43	43	43	43	43	43	43	43	43	43	43	43	43	43	43	43	43
				Exposed	43	43	43	43	43	43	43	43	43	43	43	43	43	43	43	43	43	43	43	43	43	43	43	43	43	43	43	43	43	43	43	43	43	43	43	42	43	41	39	43	38	36
		4:12	18.4	Non-Exposed	43	43	43	43	43	43	43	43	43	43	43	43	43	43	43	43	43	43	43	43	43	43	43	43	43	43	43	43	43	43	43	43	43	43	43	43	43	43	43	43	43	43
				Exposed	43	43	43	43	43	43	43	43	43	43	43	43	43	43	43	43	43	43	43	43	43	43	43	43	43	43	43	43	43	43	43	43	43	43	43	41	43	41	39	43	38	36
		5:12	22.6	Non-Exposed	44	44		44	44		44	44		44	44		44	44		44	44		44	44		44	44		44	44		44	44		44	44		44	44		44	44		44	44	
				Exposed	44	44		44	44		44	44		44	44		44	44		44	44		44	44		44	44		44	44		44	44		44	44		44	44		44	44		44	42	
		6:12	26.6	Non-Exposed	46	46		46	46		46	46		46	46		46	46		46	46		46	46		46	46		46	46		46	46		46	46		46	46		46	46		46	46	
				Exposed	46	46		46	46		46	46		46	46		46	46		46	46		46	46		46	46		46	46		46	46		46	46		46	46		46	45		46	42	
		7:12	30.3	Non-Exposed	47	47	47	47	47	47	47	47	47	47	47	47	47	47	47	47	47	47	47	47	47	47	47	47	47	47	47	47	47	47	47	47	47	47	47	47	47	47	47	47	47	46
				Exposed	47	47	47	47	47	47	47	47	47	47	47	47	47	47	47	47	47	47	47	47	47	47	47	47	47	47	47	47	47	47	47	46	44	47	42	40	47	39	37	47	36	34
		8:12	33.7	Non-Exposed	49	49	49	49	49	49	49	49	49	49	49	49	49	49	49	49	49	49	49	49	49	49	49	49	49	49	49	49	49	49	49	49	49	49	49	49	49	49	49	49	46	46
				Exposed	49	49	49	49	49	49	49	49	49	49	49	49	49	49	49	49	49	49	49	49	49	49	49	49	49	49	49	49	49	48	49	46	44	49	42	40	49	39	37	49	36	34
		9:12	36.9	Non-Exposed	51	51	51	51	51	51	51	51	51	51	51	51	51	51	51	51	51	51	51	51	51	51	51	51	51	51	51	51	51	51	51	51	51	51	51	51	51	51	51	49	47	46
				Exposed	51	51	51	51	51	51	51	51	51	51	51	51	51	51	51	51	51	51	51	51	51	51	51	51	51	51	51	51	49	48	51	45	44	51	42	40	51	39	37	50	36	34
		10:12	39.8	Non-Exposed	54	54	54	54	54	54	54	54	54	54	54	54	54	54	54	54	54	54	54	54	54	54	54	54	54	54	54	54	54	54	54	54	54	54	54	53	53	51	49	52	47	45
				Exposed	54	54	54	54	54	54	54	54	54	54	54	54	54	54	54	54	54	54	54	54	53	54	49	48	54	45	43	54	42	40	53	39	37	50	36	34						
		11:12	42.5	Non-Exposed	56	56	56	56	56	56	56	56	56	56	56	56	56	56	56	56	56	56	56	56	56	56	56	56	56	56	56	56	56	56	56	53	53	56	54	53	55	50	49	54	47	45
				Exposed	56	56	56	56	56	56	56	56	56	56	56	56	56	56	56	56	56	56	56	56	56	56	49	48	56	45	43	56	42	40	53	39	37	50	36	34						
		12:12	45	Non-Exposed	58	58	58	58	58	58	58	58	58	58	58	58	58	58	58	58	58	58	58	58	58	58	58	58	58	58	58	58	58	58	58	58	58	58	54	53	57	50	49	56	47	45
				Exposed	58	58	58	58	58	58	58	58	58	58	58	58	58	58	58	58	58	58	58	58	58	58	54	52	58	49	48	58	45	43	57	42	40	53	39	37	50	36	34			
	C	2:12	9.5	Non-Exposed	45	45	45	45	45	45	45	45	45	45	45	45	45	45	45	45	45	45	45	45	45	45	45	45	45	45	45	45	45	45	45	45	45	45	45	43	45	42	40	44	40	38
				Exposed	45	45	45	45	45	45	45	45	45	45	45	45	45	45	45	45	45	45	45	45	45	45	45	43	45	41	39	45	38	36	42	36	34	39	33	32	37	32	0			
		3:12	14.0	Non-Exposed	43	43	43	43	43	43	43	43	43	43	43	43	43	43	43	43	43	43	43	43	43	43	43	43	43	43	43	43	43	43	43	43	43	43	43	43	43	42	40	43	40	38
				Exposed	43	43	43	43	43	43	43	43	43	43	43	43	43	43	43	43	43	43	43	43	43	43	43	43	43	41	39	43	38	36	42	35	34	39	33	32	37	32	0			
		4:12	18.4	Non-Exposed	43	43	43	43	43	43	43	43	43	43	43	43	43	43	43	43	43	43	43	43	43	43	43	43	43	43	43	43	43	43	43	43	43	43	43	43	43	42	40	43	40	38
				Exposed	43	43	43	43	43	43	43	43	43	43	43	43	43	43	43	43	43	43	43	43	43	43	43	43	43	41	39	43	38	36	42	35	34	39	33	32	37	32	0			
		5:12	22.6	Non-Exposed	44	44		44	44		44	44		44	44		44	44		44	44		44	44		44	44		44	44		44	44		44	44		44	44		44	44		43	43	
				Exposed	44	44		44	44		44	44		44	44		44	44		44	44		44	44		44	44		44	44		44	44		44	43		44	40		44	37		43	35	
		6:12	26.6	Non-Exposed	46	46		46	46		46	46		46	46		46	46		46	46		46	46		46	46		46	46		46	46		46	46		45	45		45	45		44	44	
				Exposed	46	46		46	46		46	46		46	46		46	46		46	46		46	46		46	46		46	46		46	46		46	43		45	39		45	37		43	35	
		7:12	30.3	Non-Exposed	47	47	47	47	47	47	47	47	47	47	47	47	47	47	47	47	47	47	47	47	47	47	47	47	47	47	47	47	47	47	47	47	46	47	44	42	46	41	39	45	38	36
				Exposed	47	47	47	47	47	47	47	47	47	47	47	47	47	47	47	47	47	47	47	47	47	47	47	47	47	44	42	47	40	38	47	37	34	47	34	32	44	32	0	41	0	0
		8:12	33.7	Non-Exposed	49	49	49	49	49	49	49	49	49	49	49	49	49	49	49	49	49	49	49	49	49	49	49	49	49	49	49	49	49	46	49	46	46	48	44	42	47	41	39	46	38	36
				Exposed	49	49	49	49	49	49	49	49	49	49	49	49	49	49	49	49	49	49	49	49	49	49	48	46	49	43	41	49	40	38	49	37	34	47	34	32	44	32	0	41	0	0
		9:12	36.9	Non-Exposed	51	51	51	51	51	51	51	51	51	51	51	51	51	51	51	51	51	51	51	51	51	51	51	51	51	51	51	51	51	50	51	47	46	50	44	42	49	41	39	48	38	36
				Exposed	51	51	51	51	51	51	51	51	51	51	51	51	51	51	51	51	51	51	51	50	49	51	48	46	51	43	41	51	40	38	50	37	34	47	34	32	44	32	0	41	0	0
		10:12	39.8	Non-Exposed	54	54	54	54	54	54	54	54	54	54	54	54	54	54	54	54	54	54	54	54	54	54	54	54	54	54	54	53	51	50	52	47	46	51	44	42	50	41	39	49	38	36
				Exposed	54	54	54	54	54	54	54	54	54	54	54	54	54	54	54	54	53	52	54	50	49	54	48	46	54	43	41	53	40	37	50	36	34	47	34	32	44	32	0	41	0	0
		11:12	42.5	Non-Exposed	56	56	56	56	56	56	56	56	56	56	56	56	56	56	56	56	56	56	56	56	56	56	56	56	56	56	55	55	51	50	54	47	46	53	44	42	52	41	39	51	38	36
				Exposed	56	56	56	56	56	56	56	56	56	56	56	56	56	56	55	56	53	51	56	50	49	56	48	46	56	43	41	54	40	37	50	36	34	47	34	32	44	32	0	41	0	0
		12:12	45	Non-Exposed	58	58	58	58	58	58	58	58	58	58	58	58	58	58	58	58	58	58	58	58	58	58	58	58	58	56	55	57	51	50	56	47	45	55	44	42	54	41	38	52	38	36
				Exposed	58	58	58	58	58	58	58	58	58	58	58	58	58	56	55	58	53	51	58	50	48	58	47	46	58	43	41	54	40	37	50	36	34	47	34	32	44	32	0	41	0	0
	D	2:12	9.5	Non-Exposed	45	45	45	45	45	45	45	45	45	45	45	45	45	45	45	45	45	45	45	45	45	45	45	45	45	45	45	45	45	45	45	44	42	44	41	39	44	38	36	42	36	34
				Exposed	45	45	45	45	45	45	45	45	45	45	45	45	45	45	45	45	45	45	45	45	45	45	45	42	45	41	39	44	37	36	41	35	33	38	33	31	36	0	0	34	0	0
		3:12	14.0	Non-Exposed	43	43	43	43	43	43	43	43	43	43	43	43	43	43	43	43	43	43	43	43	43	43	43	43	43	43	43	43	43	43	43	43	42	43	41	39	42	38	36	41	36	34
				Exposed	43	43	43	43	43	43	43	43	43	43	43	43	43	43	43	43	43	43	43	43	43	43	43	42	43	41	39	43	37	36	41	35	33	38	33	31	36	0	0	34	0	0
		4:12	18.4	Non-Exposed	43	43	43	43	43	43	43	43	43	43	43	43	43	43	43	43	43	43	43	43	43	43	43	43	43	43	43	43	43	43	43	43	42	43	41	39	42	38	36	41	36	34
				Exposed	43	43	43	43	43	43	43	43	43	43	43	43	43	43	43	43	43	43	43	43	43	43	43	42	43	41	39	43	37	35	40	35	33	38	32	0	35	0	0	34	0	0
		5:12	22.6	Non-Exposed	44	44		44	44		44	44		44	44		44	44		44	44		44	44		44	44		44	44		44	44		44	44		44	44		43	43		42	40	
				Exposed	44	44		44	44		44	44		44	44		44	44		44	44		44	44		44	44		44	42		44	38		44	36		41	34		39	32				
		6:12	26.6	Non-Exposed	46	46		46	46		46	46		46	46		46	46		46	46		46	46		46	46		46	46		46	46		45	45		44	44		44	43		43	40	
				Exposed	46	46		46	46		46	46		46	46		46	46		46	46		46	46		46	46		46	45		46	42		45	38		44	36		41	34		39	32	
		7:12	30.3	Non-Exposed	47	47	47	47	47	47	47	47	47	47	47	47	47	47	47	47	47	47	47	47	47	47	47	47	47	47	47	47	46	45	46	43	41	46	39	37	45	37	35	44	34	32
				Exposed	47	47	47	47	47	47	47	47	47	47	47	47	47	47	47	47	47	46	47	45	43	47	43	41	47	39	37	47	36	34	46	33	31	42	31	0	40	0	0	37	0	0
		8:12	33.7	Non-Exposed	49	49	49	49	49	49	49	49	49	49	49	49	49	49	49	49	49	49	49	49	49	49	49	49	49	49	49	49	46	45	48	43	41	47	39	37	46	37	34	45	34	32
				Exposed	49	49	49	49	49	49	49	49	49	49	49	49	49	49	49	49	48	46	49	45	43	49	43	41	49	39	37	49	36	34	46	33	31	42	31	0	40	0	0	37	0	0
		9:12	36.9	Non-Exposed	51	51	51	51	51	51	51	51	51	51	51	51	51	51	51	51	51	51	51	51	51	51	51	51	51	51	49	50	46	44	49	43	41	48	39	37	47	37	34	46	34	32
				Exposed	51	51	51	51	51	51	51	51	51	51	51	51	51	50	49	51	48	46	51	45	43	51	43	41	51	39	37	49	36	34	46	33	31	42	31	0	39	0	0	37	0	0
		10:12	39.8	Non-Exposed	54	54	54	54	54	54	54	54	54	54	54	54	54	54	54	54	54	54	54	54	54	54	54	54	53	50	49	52	46	44	51	42	40	50	39	37	49	37	34	47	34	32
				Exposed	54	54	54	54	54	54	54	54	54	54	53	52	54	50	49	54	47	46	54	45	43	54	43	41	53	39	37	49	36	34	45	33	31	42	31	0	39	0	0	37	0	0
		11:12	42.5	Non-Exposed	56	56	56	56	56	56	56	56	56	56	56	56	56	56	56	56	56	56	56	56	56	56	55	54	55	50	49	54	46	44	53	42	40	52	39	37	50	36	34	47	34	32
				Exposed	56	56	56	56	56	56	56	56	55	56	53	52	56	50	48	56	47	46	56	45	43	56	43	41	53	39	37	49	36	33	45	33	31	42	31	0	39	0	0	37	0	0
		12:12	45	Non-Exposed	58	58	58	58	58	58	58	58	58	58	58	58	58	58	58	58	58	58	58	58	58	58	55	54	57	50	49	56	46	44	55	42	40	53	39	37	50	36	34	47	34	32
				Exposed	58	58	58	58	58	58	58	56	55	58	53	52	58	50	48	58	47	46	58	45	43	58	43	41	53	39	37	49	35	33	45	33	31	42	31	0	39	0	0	37	0	0

Tamarack 2.3 Rail – Hip Flush-Mount on 30 Foot Maximum Mean Roof Height – Portrait – Panel Length = 80 Inches or Less

Ground Snow Load	Exposure Category	Roof Pitch	Roof Angle	Wind Speed (mph)	95			100			105			110			115			120			125			130			140			150			160			170			180			190		
				Roof Area	1	2	3	1	2	3	1	2	3	1	2	3	1	2	3	1	2	3	1	2	3	1	2	3	1	2	3	1	2	3	1	2	3	1	2	3	1	2	3	1	2	3
45	B	2:12	9.5	Non-Exposed	43	43	43	43	43	43	43	43	43	43	43	43	43	43	43	43	43	43	43	43	43	43	43	43	43	43	43	43	43	43	43	43	43	43	43	43	43	43	43	43	43	43
				Exposed	43	43	43	43	43	43	43	43	43	43	43	43	43	43	43	43	43	43	43	43	43	43	43	43	43	43	43	43	43	43	43	43	43	43	43	42	43	41	39	43	38	36
		3:12	14.0	Non-Exposed	41	41	41	41	41	41	41	41	41	41	41	41	41	41	41	41	41	41	41	41	41	41	41	41	41	41	41	41	41	41	41	41	41	41	41	41	41	41	41	41	41	41
				Exposed	41	41	41	41	41	41	41	41	41	41	41	41	41	41	41	41	41	41	41	41	41	41	41	41	41	41	41	41	41	41	41	41	41	41	41	41	41	41	39	41	38	36
		4:12	18.4	Non-Exposed	41	41	41	41	41	41	41	41	41	41	41	41	41	41	41	41	41	41	41	41	41	41	41	41	41	41	41	41	41	41	41	41	41	41	41	41	41	41	41	41	41	41
				Exposed	41	41	41	41	41	41	41	41	41	41	41	41	41	41	41	41	41	41	41	41	41	41	41	41	41	41	41	41	41	41	41	41	41	41	41	41	41	41	39	41	38	36
		5:12	22.6	Non-Exposed	42	42		42	42		42	42		42	42		42	42		42	42		42	42		42	42		42	42		42	42		42	42		42	42		42	42		42	42	
				Exposed	42	42		42	42		42	42		42	42		42	42		42	42		42	42		42	42		42	42		42	42		42	42		42	42		42	42		42	42	
		6:12	26.6	Non-Exposed	43	43		43	43		43	43		43	43		43	43		43	43		43	43		43	43		43	43		43	43		43	43		43	43		43	43		43	43	
				Exposed	43	43		43	43		43	43		43	43		43	43		43	43		43	43		43	43		43	43		43	43		43	43		43	43		43	43		43	42	
		7:12	30.3	Non-Exposed	45	45	45	45	45	45	45	45	45	45	45	45	45	45	45	45	45	45	45	45	45	45	45	45	45	45	45	45	45	45	45	45	45	45	45	45	45	45	45	45	45	45
				Exposed	45	45	45	45	45	45	45	45	45	45	45	45	45	45	45	45	45	45	45	45	45	45	45	45	45	45	45	45	45	44	45	42	40	45	39	37	45	36	34			
		8:12	33.7	Non-Exposed	47	47	47	47	47	47	47	47	47	47	47	47	47	47	47	47	47	47	47	47	47	47	47	47	47	47	47	47	47	47	47	47	47	47	47	47	47	47	47	47	46	
				Exposed	47	47	47	47	47	47	47	47	47	47	47	47	47	47	47	47	47	47	47	47	47	47	47	47	47	47	47	47	47	46	44	47	42	40	47	39	37	47	36	34		
		9:12	36.9	Non-Exposed	49	49	49	49	49	49	49	49	49	49	49	49	49	49	49	49	49	49	49	49	49	49	49	49	49	49	49	49	49	49	49	49	49	49	49	49	49	49	49	47	46	
				Exposed	49	49	49	49	49	49	49	49	49	49	49	49	49	49	49	49	49	49	49	49	49	49	49	49	49	49	49	49	49	45	44	49	42	40	49	39	37	49	36	34		
		10:12	39.8	Non-Exposed	51	51	51	51	51	51	51	51	51	51	51	51	51	51	51	51	51	51	51	51	51	51	51	51	51	51	51	51	51	51	51	51	51	51	51	51	51	51	49	50	47	45
				Exposed	51	51	51	51	51	51	51	51	51	51	51	51	51	51	51	51	51	51	51	51	51	51	51	51	51	51	51	51	49	48	51	45	43	51	42	40	51	39	37	50	36	34
		11:12	42.5	Non-Exposed	54	54	54	54	54	54	54	54	54	54	54	54	54	54	54	54	54	54	54	54	54	54	54	54	54	54	54	54	54	54	54	54	53	53	50	49	52	47	45			
				Exposed	54	54	54	54	54	54	54	54	54	54	54	54	54	54	54	54	54	54	54	54	54	54	54	54	54	54	53	54	49	48	54	45	43	54	42	40	53	39	37	50	36	34
		12:12	45	Non-Exposed	56	56	56	56	56	56	56	56	56	56	56	56	56	56	56	56	56	56	56	56	56	56	56	56	56	56	56	56	56	56	56	56	56	56	54	53	55	50	49	54	47	45
				Exposed	56	56	56	56	56	56	56	56	56	56	56	56	56	56	56	56	56	56	56	56	56	56	56	56	56	54	52	56	49	48	56	45	43	56	42	40	53	39	37	50	36	34
	C	2:12	9.5	Non-Exposed	43	43	43	43	43	43	43	43	43	43	43	43	43	43	43	43	43	43	43	43	43	43	43	43	43	43	43	43	43	43	43	43	43	43	43	43	43	42	40	42	40	38
				Exposed	43	43	43	43	43	43	43	43	43	43	43	43	43	43	43	43	43	43	43	43	43	43	43	43	43	43	43	43	41	39	43	38	36	42	36	34	39	33	32	37	32	0
		3:12	14.0	Non-Exposed	41	41	41	41	41	41	41	41	41	41	41	41	41	41	41	41	41	41	41	41	41	41	41	41	41	41	41	41	41	41	41	41	41	41	41	41	41	41	40	41	40	38
				Exposed	41	41	41	41	41	41	41	41	41	41	41	41	41	41	41	41	41	41	41	41	41	41	41	41	41	41	41	41	41	39	41	38	36	41	35	34	39	33	32	37	32	0
		4:12	18.4	Non-Exposed	41	41	41	41	41	41	41	41	41	41	41	41	41	41	41	41	41	41	41	41	41	41	41	41	41	41	41	41	41	41	41	41	41	41	41	41	41	41	40	41	40	38
				Exposed	41	41	41	41	41	41	41	41	41	41	41	41	41	41	41	41	41	41	41	41	41	41	41	41	41	41	41	41	41	39	41	38	36	41	35	34	39	33	32	37	32	0
		5:12	22.6	Non-Exposed	42	42		42	42		42	42		42	42		42	42		42	42		42	42		42	42		42	42		42	42		42	42		42	42		42	42		41	41	
				Exposed	42	42		42	42		42	42		42	42		42	42		42	42		42	42		42	42		42	42		42	42		42	42		42	40		42	37		41	35	
		6:12	26.6	Non-Exposed	43	43		43	43		43	43		43	43		43	43		43	43		43	43		43	43		43	43		43	43		43	43		43	43		43	43		42	42	
				Exposed	43	43		43	43		43	43		43	43		43	43		43	43		43	43		43	43		43	43		43	43		43	43		43	39		43	37		42	35	
45		7:12	30.3	Non-Exposed	45	45	45	45	45	45	45	45	45	45	45	45	45	45	45	45	45	45	45	45	45	45	45	45	45	45	45	45	45	45	45	45	45	44	42	44	41	39	43	38	36
				Exposed	45	45	45	45	45	45	45	45	45	45	45	45	45	45	45	45	45	45	45	45	45	45	45	45	45	44	42	45	40	38	45	37	34	45	34	32	44	32	0	41	0	0
		8:12	33.7	Non-Exposed	47	47	47	47	47	47	47	47	47	47	47	47	47	47	47	47	47	47	47	47	47	47	47	47	47	47	47	47	47	46	47	47	46	46	44	42	45	41	39	45	38	36
				Exposed	47	47	47	47	47	47	47	47	47	47	47	47	47	47	47	47	47	47	47	47	47	47	47	46	47	43	41	47	40	38	47	37	34	46	34	32	44	32	0	41	0	0
		9:12	36.9	Non-Exposed	49	49	49	49	49	49	49	49	49	49	49	49	49	49	49	49	49	49	49	49	49	49	49	49	49	49	49	49	49	49	49	47	46	48	44	42	47	41	39	46	38	36
				Exposed	49	49	49	49	49	49	49	49	49	49	49	49	49	49	49	49	49	49	49	49	49	49	48	46	49	43	41	49	40	38	49	37	34	47	34	32	44	32	0	41	0	0
		10:12	39.8	Non-Exposed	51	51	51	51	51	51	51	51	51	51	51	51	51	51	51	51	51	51	51	51	51	51	51	51	51	51	51	51	51	50	50	47	46	50	44	42	49	41	39	48	38	36
				Exposed	51	51	51	51	51	51	51	51	51	51	51	51	51	51	51	51	51	51	51	50	49	51	48	46	51	43	41	51	40	37	50	36	34	47	34	32	44	32	0	41	0	0
		11:12	42.5	Non-Exposed	54	54	54	54	54	54	54	54	54	54	54	54	54	54	54	54	54	54	54	54	54	54	54	54	54	54	54	53	51	50	52	47	46	51	44	42	50	41	39	49	38	36
				Exposed	54	54	54	54	54	54	54	54	54	54	54	54	54	54	54	54	53	51	54	50	49	54	48	46	54	43	41	53	40	37	50	36	34	47	34	32	44	32	0	41	0	0
		12:12	45	Non-Exposed	56	56	56	56	56	56	56	56	56	56	56	56	56	56	56	56	56	56	56	56	56	56	56	56	56	56	55	55	51	50	54	47	45	53	44	42	52	41	38	51	38	36
				Exposed	56	56	56	56	56	56	56	56	56	56	56	56	56	56	55	56	53	51	56	50	48	56	47	46	56	43	41	54	40	37	50	36	34	47	34	32	44	32	0	41	0	0
	D	2:12	9.5	Non-Exposed	43	43	43	43	43	43	43	43	43	43	43	43	43	43	43	43	43	43	43	43	43	43	43	43	43	43	43	43	43	42	42	41	39	42	38	36	41	36	34			
				Exposed	43	43	43	43	43	43	43	43	43	43	43	43	43	43	43	43	43	43	43	43	43	43	43	42	43	41	39	43	37	36	41	35	33	38	33	31	36	0	0	34	0	0
		3:12	14.0	Non-Exposed	41	41	41	41	41	41	41	41	41	41	41	41	41	41	41	41	41	41	41	41	41	41	41	41	41	41	41	41	41	41	41	41	41	41	41	39	40	38	36	40	36	34
				Exposed	41	41	41	41	41	41	41	41	41	41	41	41	41	41	41	41	41	41	41	41	41	41	41	41	41	41	39	41	37	36	41	35	33	38	33	31	36	0	0	34	0	0
		4:12	18.4	Non-Exposed	41	41	41	41	41	41	41	41	41	41	41	41	41	41	41	41	41	41	41	41	41	41	41	41	41	41	41	41	41	41	41	41	41	41	41	39	40	38	36	40	36	34
				Exposed	41	41	41	41	41	41	41	41	41	41	41	41	41	41	41	41	41	41	41	41	41	41	41	41	41	41	39	41	37	35	40	35	33	38	32	0	35	0	0	34	0	0
		5:12	22.6	Non-Exposed	42	42		42	42		42	42		42	42		42	42		42	42		42	42		42	42		42	42		42	42		42	42		42	42		41	41		40	40	
				Exposed	42	42		42	42		42	42		42	42		42	42		42	42		42	42		42	42		42	42		42	42		42	38		42	36		41	34		39	32	
		6:12	26.6	Non-Exposed	43	43		43	43		43	43		43	43		43	43		43	43		43	43		43	43		43	43		43	43		43	43		43	43		42	42		41	40	
				Exposed	43	43		43	43		43	43		43	43		43	43		43	43		43	43		43	43		43	43		43	42		43	38		43	36		41	34		39	32	
		7:12	30.3	Non-Exposed	45	45	45	45	45	45	45	45	45	45	45	45	45	45	45	45	45	45	45	45	45	45	45	45	45	45	45	45	45	41	44	39	37	43	37	35	42	34	32			
				Exposed	45	45	45	45	45	45	45	45	45	45	45	45	45	45	45	45	45	45	45	45	43	45	43	41	45	39	37	45	36	34	45	33	31	42	31	0	40	0	0	37	0	0
		8:12	33.7	Non-Exposed	47	47	47	47	47	47	47	47	47	47	47	47	47	47	47	47	47	47	47	47	47	47	47	47	47	47	47	47	46	45	46	43	41	45	39	37	44	37	34	43	34	32
				Exposed	47	47	47	47	47	47	47	47	47	47	47	47	47	47	47	47	47	46	47	45	43	47	43	41	47	39	37	47	36	34	46	33	31	42	31	0	40	0	0	37	0	0
		9:12	36.9	Non-Exposed	49	49	49	49	49	49	49	49	49	49	49	49	49	49	49	49	49	49	49	49	49	49	49	49	49	49	49	48	46	44	47	43	41	47	39	37	46	37	34	45	34	32
				Exposed	49	49	49	49	49	49	49	49	49	49	49	49	49	49	49	49	48	46	49	45	43	49	43	41	49	39	37	48	36	34	46	33	31	42	31	0	39	0	0	37	0	0
		10:12	39.8	Non-Exposed	51	51	51	51	51	51	51	51	51	51	51	51	51	51	51	51	51	51	51	51	51	51	51	51	51	50	49	50	46	44	49	42	40	48	39	37	47	37	34	46	34	32
				Exposed	51	51	51	51	51	51	51	51	51	51	51	51	51	50	49	51	47	46	51	45	43	51	43	41	51	39	37	49	36	34	45	33	31	42	31	0	39	0	0	37	0	0
		11:12	42.5	Non-Exposed	54	54	54	54	54	54	54	54	54	54	54	54	54	54	54	54	54	54	54	54	54	54	54	54	53	50	49	52	46	44	51	42	40	50	39	37	49	36	34	47	34	32
				Exposed	54	54	54	54	54	54	54	54	54	54	53	52	54	50	48	54	47	46	54	45	43	54	43	41	53	39	37	49	36	33	45	33	31	42	31	0	39	0	0	37	0	0
		12:12	45	Non-Exposed	56	56	56	56	56	56	56	56	56	56	56	56	56	56	56	56	56	56	56	56	56	56	55	54	55	50	49	54	46	44	53	42	40	52	39	37	50	36	34	47	34	32
				Exposed	56	56	56	56	56	56	56	56	55	56	53	52	56	50	48	56	47	46	56	45	43	56	43	41	53	39	37	49	35	33	45	33	31	42	31	0	39	0	0	37	0	0

Tamarack 2.3 Rail – Hip Flush-Mount on 30 Foot Maximum Mean Roof Height – Portrait – Panel Length = 80 Inches or Less

Ground Snow Load	Exposure Category	Roof Pitch	Roof Angle	Wind Speed (mph)	95			100			105			110			115			120			125			130			140			150			160			170			180			190		
				Roof Area	1	2	3	1	2	3	1	2	3	1	2	3	1	2	3	1	2	3	1	2	3	1	2	3	1	2	3	1	2	3	1	2	3	1	2	3	1	2	3	1	2	3
50	B	2:12	9.5	Non-Exposed	41	41	41	41	41	41	41	41	41	41	41	41	41	41	41	41	41	41	41	41	41	41	41	41	41	41	41	41	41	41	41	41	41	41	41	41	41	41	41	41	41	41
				Exposed	41	41	41	41	41	41	41	41	41	41	41	41	41	41	41	41	41	41	41	41	41	41	41	41	41	41	41	41	41	41	41	41	41	41	41	41	41	41	39	41	38	36
		3:12	14.0	Non-Exposed	39	39	39	39	39	39	39	39	39	39	39	39	39	39	39	39	39	39	39	39	39	39	39	39	39	39	39	39	39	39	39	39	39	39	39	39	39	39	39	39	39	39
				Exposed	39	39	39	39	39	39	39	39	39	39	39	39	39	39	39	39	39	39	39	39	39	39	39	39	39	39	39	39	39	39	39	39	39	39	39	39	39	39	39	39	38	36
		4:12	18.4	Non-Exposed	39	39	39	39	39	39	39	39	39	39	39	39	39	39	39	39	39	39	39	39	39	39	39	39	39	39	39	39	39	39	39	39	39	39	39	39	39	39	39	39	39	39
				Exposed	39	39	39	39	39	39	39	39	39	39	39	39	39	39	39	39	39	39	39	39	39	39	39	39	39	39	39	39	39	39	39	39	39	39	39	39	39	39	39	39	38	36
		5:12	22.6	Non-Exposed	40	40		40	40		40	40		40	40		40	40		40	40		40	40		40	40		40	40		40	40		40	40		40	40		40	40		40	40	
				Exposed	40	40		40	40		40	40		40	40		40	40		40	40		40	40		40	40		40	40		40	40		40	40		40	40		40	40		40	40	
		6:12	26.6	Non-Exposed	41	41		41	41		41	41		41	41		41	41		41	41		41	41		41	41		41	41		41	41		41	41		41	41		41	41		41	41	
				Exposed	41	41		41	41		41	41		41	41		41	41		41	41		41	41		41	41		41	41		41	41		41	41		41	41		41	41		41	41	
		7:12	30.3	Non-Exposed	43	43	43	43	43	43	43	43	43	43	43	43	43	43	43	43	43	43	43	43	43	43	43	43	43	43	43	43	43	43	43	43	43	43	43	43	43	43	43	43	43	43
				Exposed	43	43	43	43	43	43	43	43	43	43	43	43	43	43	43	43	43	43	43	43	43	43	43	43	43	43	43	43	43	43	43	43	43	43	42	40	43	39	37	43	36	34
		8:12	33.7	Non-Exposed	44	44	44	44	44	44	44	44	44	44	44	44	44	44	44	44	44	44	44	44	44	44	44	44	44	44	44	44	44	44	44	44	44	44	44	44	44	44	44	44	44	44
				Exposed	44	44	44	44	44	44	44	44	44	44	44	44	44	44	44	44	44	44	44	44	44	44	44	44	44	44	44	44	44	44	44	44	44	44	42	40	44	39	37	44	36	34
		9:12	36.9	Non-Exposed	46	46	46	46	46	46	46	46	46	46	46	46	46	46	46	46	46	46	46	46	46	46	46	46	46	46	46	46	46	46	46	46	46	46	46	46	46	46	46	46	46	46
				Exposed	46	46	46	46	46	46	46	46	46	46	46	46	46	46	46	46	46	46	46	46	46	46	46	46	46	46	46	46	46	46	46	45	44	46	42	40	46	39	37	46	36	34
		10:12	39.8	Non-Exposed	49	49	49	49	49	49	49	49	49	49	49	49	49	49	49	49	49	49	49	49	49	49	49	49	49	49	49	49	49	49	49	49	49	49	49	49	49	49	49	47	45
				Exposed	49	49	49	49	49	49	49	49	49	49	49	49	49	49	49	49	49	49	49	49	49	49	49	49	49	49	49	49	49	48	49	45	43	49	42	40	49	39	37	49	36	34
		11:12	42.5	Non-Exposed	51	51	51	51	51	51	51	51	51	51	51	51	51	51	51	51	51	51	51	51	51	51	51	51	51	51	51	51	51	48	49	45	43	49	42	40	49	39	37	49	36	34
				Exposed	51	51	51	51	51	51	51	51	51	51	51	51	51	51	51	51	51	51	51	51	51	51	51	51	51	51	51	51	51	48	46	45	43	49	42	40	48	39	37	48	36	34
		12:12	45	Non-Exposed	54	54	54	54	54	54	54	54	54	54	54	54	54	54	54	54	54	54	54	54	54	54	54	54	54	54	54	54	54	48	46	45	43	49	42	40	48	39	37	47	36	34
				Exposed	54	54	54	54	54	54	54	54	54	54	54	54	54	54	54	54	54	54	54	54	54	54	54	54	54	54	54	54	54	48	46	45	43	49	42	40	48	39	37	47	36	34
	C	2:12	9.5	Non-Exposed	41	41	41	41	41	41	41	41	41	41	41	41	41	41	41	41	41	41	41	41	41	41	41	41	41	41	41	41	41	41	41	41	41	41	41	41	41	41	40	41	40	38
				Exposed	41	41	41	41	41	41	41	41	41	41	41	41	41	41	41	41	41	41	41	41	41	41	41	41	41	41	41	41	41	39	41	38	36	41	36	34	39	33	32	37	32	0
		3:12	14.0	Non-Exposed	39	39	39	39	39	39	39	39	39	39	39	39	39	39	39	39	39	39	39	39	39	39	39	39	39	39	39	39	39	39	39	39	39	39	39	39	39	39	39	39	39	38
				Exposed	39	39	39	39	39	39	39	39	39	39	39	39	39	39	39	39	39	39	39	39	39	39	39	39	39	39	39	39	38	36	39	35	34	39	33	32	37	32	32	37	32	0
		4:12	18.4	Non-Exposed	39	39	39	39	39	39	39	39	39	39	39	39	39	39	39	39	39	39	39	39	39	39	39	39	39	39	39	39	39	39	39	39	39	39	39	39	39	39	39	39	39	38
				Exposed	39	39	39	39	39	39	39	39	39	39	39	39	39	39	39	39	39	39	39	39	39	39	39	39	39	39	39	39	38	36	39	35	34	39	33	32	37	32	32	37	32	0
		5:12	22.6	Non-Exposed	40	40		40	40		40	40		40	40		40	40		40	40		40	40		40	40		40	40		40	40		40	40		40	40		40	40		40	40	
				Exposed	40	40		40	40		40	40		40	40		40	40		40	40		40	40		40	40		40	40		40	40		40	40		40	40		40	37		40	35	
		6:12	26.6	Non-Exposed	41	41		41	41		41	41		41	41		41	41		41	41		41	41		41	41		41	41		41	41		41	41		41	41		41	41		41	41	
				Exposed	41	41		41	41		41	41		41	41		41	41		41	41		41	41		41	41		41	41		41	41		41	41		41	39		41	37		41	35	
50		7:12	30.3	Non-Exposed	43	43	43	43	43	43	43	43	43	43	43	43	43	43	43	43	43	43	43	43	43	43	43	43	43	43	43	43	43	43	43	43	43	43	43	42	43	41	39	42	38	36
				Exposed	43	43	43	43	43	43	43	43	43	43	43	43	43	43	43	43	43	43	43	43	43	43	43	43	43	43	42	43	40	38	43	37	34	43	34	32	43	32	0	41	0	0
		8:12	33.7	Non-Exposed	44	44	44	44	44	44	44	44	44	44	44	44	44	44	44	44	44	44	44	44	44	44	44	44	44	44	44	44	44	44	44	44	44	44	44	42	44	41	39	43	38	36
				Exposed	44	44	44	44	44	44	44	44	44	44	44	44	44	44	44	44	44	44	44	44	44	44	44	41	44	40	38	44	37	34	44	34	32	44	32	0	41	0	0	45	0	0
		9:12	36.9	Non-Exposed	46	46	46	46	46	46	46	46	46	46	46	46	46	46	46	46	46	46	46	46	46	46	46	46	46	46	46	46	46	46	46	46	46	46	44	42	45	41	39	45	38	36
				Exposed	46	46	46	46	46	46	46	46	46	46	46	46	46	46	46	46	46	46	46	46	46	46	46	43	41	46	40	38	46	37	34	46	34	32	44	32	0	41	0	0	45	0	0
		10:12	39.8	Non-Exposed	49	49	49	49	49	49	49	49	49	49	49	49	49	49	49	49	49	49	49	49	49	49	49	49	49	49	49	49	49	47	46	48	44	42	47	41	39	46	38	36	45	38	36
				Exposed	49	49	49	49	49	49	49	49	49	49	49	49	49	49	49	49	49	49	49	49	49	49	48	46	49	43	41	49	40	37	49	36	34	47	34	32	44	32	0	41	0	0
		11:12	42.5	Non-Exposed	51	51	51	51	51	51	51	51	51	51	51	51	51	51	51	51	51	51	51	51	51	51	51	51	51	51	51	51	51	50	51	47	46	50	44	42	49	41	39	48	38	36
				Exposed	51	51	51	51	51	51	51	51	51	51	51	51	51	51	51	51	51	51	51	50	49	51	48	46	51	43	41	51	40	37	50	36	34	47	34	32	44	32	0	41	0	0
		12:12	45	Non-Exposed	54	54	54	54	54	54	54	54	54	54	54	54	54	54	54	54	54	54	54	54	54	54	54	54	54	54	54	53	51	50	53	47	45	52	44	42	51	41	38	50	38	36
				Exposed	54	54	54	54	54	54	54	54	54	54	54	54	54	54	54	54	53	51	54	50	48	54	47	46	54	43	41	53	40	37	50	36	34	47	34	32	44	32	0	41	0	0
	D	2:12	9.5	Non-Exposed	41	41	41	41	41	41	41	41	41	41	41	41	41	41	41	41	41	41	41	41	41	41	41	41	41	41	41	41	41	41	41	41	41	41	41	39	40	38	36	40	36	34
				Exposed	41	41	41	41	41	41	41	41	41	41	41	41	41	41	41	41	41	41	41	41	41	41	41	41	41	41	39	41	37	36	41	35	33	38	33	31	36	0	0	34	0	0
		3:12	14.0	Non-Exposed	39	39	39	39	39	39	39	39	39	39	39	39	39	39	39	39	39	39	39	39	39	39	39	39	39	39	39	39	39	39	39	39	39	39	39	39	39	38	36	38	36	34
				Exposed	39	39	39	39	39	39	39	39	39	39	39	39	39	39	39	39	39	39	39	39	39	39	39	39	39	39	39	39	37	36	39	35	33	38	33	31	36	0	0	34	0	0
		4:12	18.4	Non-Exposed	39	39	39	39	39	39	39	39	39	39	39	39	39	39	39	39	39	39	39	39	39	39	39	39	39	39	39	39	39	39	39	39	39	39	39	39	39	38	36	38	36	34
				Exposed	39	39	39	39	39	39	39	39	39	39	39	39	39	39	39	39	39	39	39	39	39	39	39	39	39	39	39	39	37	35	39	35	33	38	32	0	35	0	0	34	0	0
		5:12	22.6	Non-Exposed	40	40		40	40		40	40		40	40		40	40		40	40		40	40		40	40		40	40		40	40		40	40		40	40		40	40		39	39	
				Exposed	40	40		40	40		40	40		40	40		40	40		40	40		40	40		40	40		40	40		40	40		40	38		40	36		40	34		39	32	
		6:12	26.6	Non-Exposed	41	41		41	41		41	41		41	41		41	41		41	41		41	41		41	41		41	41		41	41		41	41		41	41		40	40		40	40	
				Exposed	41	41		41	41		41	41		41	41		41	41		41	41		41	41		41	41		41	41		41	41		41	38		41	36		40	34		39	32	
		7:12	30.3	Non-Exposed	43	43	43	43	43	43	43	43	43	43	43	43	43	43	43	43	43	43	43	43	43	43	43	43	43	43	43	43	43	43	43	43	41	42	39	37	42	37	35	41	34	32
				Exposed	43	43	43	43	43	43	43	43	43	43	43	43	43	43	43	43	43	43	43	43	43	43	43	41	43	39	37	43	36	34	43	33	31	42	31	0	40	0	0	37	0	0
		8:12	33.7	Non-Exposed	44	44	44	44	44	44	44	44	44	44	44	44	44	44	44	44	44	44	44	44	44	44	44	44	44	44	44	44	44	44	44	43	41	44	39	37	43	37	34	42	34	32
				Exposed	44	44	44	44	44	44	44	44	44	44	44	44	44	44	44	44	44	44	44	43	41	44	39	37	44	36	34	44	33	31	42	31	0	40	0	0	37	0	0	37	0	0
		9:12	36.9	Non-Exposed	46	46	46	46	46	46	46	46	46	46	46	46	46	46	46	46	46	46	46	46	46	46	46	46	46	46	46	46	46	44	46	43	41	45	39	37	44	37	34	43	34	32
				Exposed	46	46	46	46	46	46	46	46	46	46	46	46	46	46	46	46	46	46	46	45	43	46	43	41	46	39	37	46	36	34	46	33	31	42	31	0	39	0	0	37	0	0
		10:12	39.8	Non-Exposed	49	49	49	49	49	49	49	49	49	49	49	49	49	49	49	49	49	49	49	49	49	49	49	49	49	49	49	48	46	44	48	42	40	47	39	37	46	37	34	45	34	32
				Exposed	49	49	49	49	49	49	49	49	49	49	49	49	49	49	49	47	46	49	45	43	49	43	41	49	39	37	48	36	34	45	33	31	42	31	0	39	0	0	37	0	0
		11:12	42.5	Non-Exposed	51	51	51	51	51	51	51	51	51	51	51	51	51	51	51	51	51	51	51	51	51	51	51	51	51	50	49	50	46	44	49	42	40	48	39	37	47	36	34	46	34	32
				Exposed	51	51	51	51	51	51	51	51	51	51	51	51	51	50	48	51	47	46	51	45	43	51	43	41	51	39	37	49	36	33	45	33	31	42	31	0	39	0	0	37	0	0
		12:12	45	Non-Exposed	54	54	54	54	54	54	54	54	54	54	54	54	54	54	54	54	54	54	54	54	54	54	54	54	53	50	49	52	46	44	51	42	40	50	39	37	49	36	34	47	34	32
				Exposed	54	54	54	54	54	54	54	54	54	54	53	52	54	50	48	54	47	46	54	45	43	54	43	41	53	39	37	49	35	33	45	33	31	42	31	0	39	0	0	37	0	0

Tamarack 2.3 Rail – Hip Flush-Mount on 30 Foot Maximum Mean Roof Height – Portrait – Panel Length = 80 Inches or Less

Ground Snow Load	Exposure Category	Roof Pitch	Roof Angle	Wind Speed (mph)	95			100			105			110			115			120			125			130			140			150			160			170			180			190		
				Roof Area	1	2	3	1	2	3	1	2	3	1	2	3	1	2	3	1	2	3	1	2	3	1	2	3	1	2	3	1	2	3	1	2	3	1	2	3	1	2	3	1	2	3
55	B	2:12	9.5	Non-Exposed	39	39	39	39	39	39	39	39	39	39	39	39	39	39	39	39	39	39	39	39	39	39	39	39	39	39	39	39	39	39	39	39	39	39	39	39	39	39	39	39	39	39
				Exposed	39	39	39	39	39	39	39	39	39	39	39	39	39	39	39	39	39	39	39	39	39	39	39	39	39	39	39	39	39	39	39	39	39	39	39	39	39	39	39	39	38	36
		3:12	14.0	Non-Exposed	37	37	37	37	37	37	37	37	37	37	37	37	37	37	37	37	37	37	37	37	37	37	37	37	37	37	37	37	37	37	37	37	37	37	37	37	37	37	37	37	37	37
				Exposed	37	37	37	37	37	37	37	37	37	37	37	37	37	37	37	37	37	37	37	37	37	37	37	37	37	37	37	37	37	37	37	37	37	37	37	37	37	37	37	37	37	36
		4:12	18.4	Non-Exposed	37	37	37	37	37	37	37	37	37	37	37	37	37	37	37	37	37	37	37	37	37	37	37	37	37	37	37	37	37	37	37	37	37	37	37	37	37	37	37	37	37	37
				Exposed	37	37	37	37	37	37	37	37	37	37	37	37	37	37	37	37	37	37	37	37	37	37	37	37	37	37	37	37	37	37	37	37	37	37	37	37	37	37	37	37	37	36
		5:12	22.6	Non-Exposed	38	38		38	38		38	38		38	38		38	38		38	38		38	38		38	38		38	38		38	38		38	38		38	38		38	38		38	38	
				Exposed	38	38		38	38		38	38		38	38		38	38		38	38		38	38		38	38		38	38		38	38		38	38		38	38		38	38		38	38	
		6:12	26.6	Non-Exposed	39	39		39	39		39	39		39	39		39	39		39	39		39	39		39	39		39	39		39	39		39	39		39	39		39	39		39	39	
				Exposed	39	39		39	39		39	39		39	39		39	39		39	39		39	39		39	39		39	39		39	39		39	39		39	39		39	39		39	39	
		7:12	30.3	Non-Exposed	41	41	41	41	41	41	41	41	41	41	41	41	41	41	41	41	41	41	41	41	41	41	41	41	41	41	41	41	41	41	41	41	41	41	41	41	41	41	41	41	41	41
				Exposed	41	41	41	41	41	41	41	41	41	41	41	41	41	41	41	41	41	41	41	41	41	41	41	41	41	41	41	41	41	41	41	41	41	41	41	40	41	39	37	41	36	34
		8:12	33.7	Non-Exposed	42	42	42	42	42	42	42	42	42	42	42	42	42	42	42	42	42	42	42	42	42	42	42	42	42	42	42	42	42	42	42	42	42	42	42	42	42	42	42	42	42	42
				Exposed	42	42	42	42	42	42	42	42	42	42	42	42	42	42	42	42	42	42	42	42	42	42	42	42	42	42	42	42	42	42	42	42	42	42	42	40	42	39	37	42	36	34
		9:12	36.9	Non-Exposed	44	44	44	44	44	44	44	44	44	44	44	44	44	44	44	44	44	44	44	44	44	44	44	44	44	44	44	44	44	44	44	44	44	44	44	44	44	44	44	44	44	44
				Exposed	44	44	44	44	44	44	44	44	44	44	44	44	44	44	44	44	44	44	44	44	44	44	44	44	44	44	44	44	44	44	44	44	44	44	42	40	44	39	37	44	36	34
		10:12	39.8	Non-Exposed	47	47	47	47	47	47	47	47	47	47	47	47	47	47	47	47	47	47	47	47	47	47	47	47	47	47	47	47	47	47	47	47	47	47	47	47	47	47	47	47	45	45
				Exposed	47	47	47	47	47	47	47	47	47	47	47	47	47	47	47	47	47	47	47	47	47	47	47	47	47	47	47	47	47	47	47	45	43	47	42	40	47	39	37	47	36	34
		11:12	42.5	Non-Exposed	49	49	49	49	49	49	49	49	49	49	49	49	49	49	49	49	49	49	49	49	49	49	49	49	49	49	49	49	49	49	49	49	49	49	49	49	49	49	49	49	47	45
				Exposed	49	49	49	49	49	49	49	49	49	49	49	49	49	49	49	49	49	49	49	49	49	49	49	49	49	49	49	49	49	48	49	45	43	49	42	40	49	39	37	49	36	34
		12:12	45	Non-Exposed	52	52	52	52	52	52	52	52	52	52	52	52	52	52	52	52	52	52	52	52	52	52	52	52	52	52	52	52	52	52	52	52	52	52	52	52	52	50	49	51	47	45
				Exposed	52	52	52	52	52	52	52	52	52	52	52	52	52	52	52	52	52	52	52	52	52	52	52	52	52	52	52	52	49	48	52	45	43	52	42	40	52	39	37	50	36	34
	C	2:12	9.5	Non-Exposed	39	39	39	39	39	39	39	39	39	39	39	39	39	39	39	39	39	39	39	39	39	39	39	39	39	39	39	39	39	39	39	39	39	39	39	39	39	39	39	39	39	38
				Exposed	39	39	39	39	39	39	39	39	39	39	39	39	39	39	39	39	39	39	39	39	39	39	39	39	39	39	39	39	39	39	39	38	36	39	36	34	39	33	32	37	32	0
		3:12	14.0	Non-Exposed	37	37	37	37	37	37	37	37	37	37	37	37	37	37	37	37	37	37	37	37	37	37	37	37	37	37	37	37	37	37	37	37	37	37	37	37	37	37	37	37	37	37
				Exposed	37	37	37	37	37	37	37	37	37	37	37	37	37	37	37	37	37	37	37	37	37	37	37	37	37	37	37	37	37	36	37	35	34	37	33	32	37	32	32	37	32	0
		4:12	18.4	Non-Exposed	37	37	37	37	37	37	37	37	37	37	37	37	37	37	37	37	37	37	37	37	37	37	37	37	37	37	37	37	37	37	37	37	37	37	37	37	37	37	37	37	37	37
				Exposed	37	37	37	37	37	37	37	37	37	37	37	37	37	37	37	37	37	37	37	37	37	37	37	37	37	37	37	37	37	36	37	35	34	37	33	32	37	32	0	37	32	0
		5:12	22.6	Non-Exposed	38	38		38	38		38	38		38	38		38	38		38	38		38	38		38	38		38	38		38	38		38	38		38	38		38	38		38	38	
				Exposed	38	38		38	38		38	38		38	38		38	38		38	38		38	38		38	38		38	38		38	38		38	38		38	38		38	37		38	35	
		6:12	26.6	Non-Exposed	39	39		39	39		39	39		39	39		39	39		39	39		39	39		39	39		39	39		39	39		39	39		39	39		39	39		39	39	
				Exposed	39	39		39	39		39	39		39	39		39	39		39	39		39	39		39	39		39	39		39	39		39	39		39	39		39	37		39	35	
		7:12	30.3	Non-Exposed	41	41	41	41	41	41	41	41	41	41	41	41	41	41	41	41	41	41	41	41	41	41	41	41	41	41	41	41	41	41	41	41	41	41	41	41	41	41	39	40	38	36
				Exposed	41	41	41	41	41	41	41	41	41	41	41	41	41	41	41	41	41	41	41	41	41	41	41	41	41	41	41	41	40	38	41	37	34	41	34	32	41	32	0	40	0	0
		8:12	33.7	Non-Exposed	42	42	42	42	42	42	42	42	42	42	42	42	42	42	42	42	42	42	42	42	42	42	42	42	42	42	42	42	42	42	42	42	42	42	42	42	42	41	39	42	38	36
				Exposed	42	42	42	42	42	42	42	42	42	42	42	42	42	42	42	42	42	42	42	42	41	42	42	42	42	42	41	42	40	38	42	37	34	42	34	32	42	32	0	41	0	0
		9:12	36.9	Non-Exposed	44	44	44	44	44	44	44	44	44	44	44	44	44	44	44	44	44	44	44	44	44	44	44	44	44	44	44	44	44	44	44	44	44	44	44	42	44	41	39	43	38	36
				Exposed	44	44	44	44	44	44	44	44	44	44	44	44	44	44	44	44	44	44	44	44	44	44	44	44	44	43	41	44	40	38	44	37	34	44	34	32	44	32	0	41	0	0
		10:12	39.8	Non-Exposed	47	47	47	47	47	47	47	47	47	47	47	47	47	47	47	47	47	47	47	47	47	47	47	47	47	47	47	47	47	46	46	44	42	46	41	39	45	38	36	45	38	36
				Exposed	47	47	47	47	47	47	47	47	47	47	47	47	47	47	47	47	47	47	47	47	47	47	47	46	47	43	41	47	40	37	47	36	34	46	34	32	44	32	0	41	0	0
		11:12	42.5	Non-Exposed	49	49	49	49	49	49	49	49	49	49	49	49	49	49	49	49	49	49	49	49	49	49	49	49	49	49	49	49	49	47	46	48	44	42	47	41	39	46	38	36	46	38	36
				Exposed	49	49	49	49	49	49	49	49	49	49	49	49	49	49	49	49	49	49	49	49	49	49	48	46	49	43	41	49	40	37	49	36	34	47	34	32	44	32	0	41	0	0
		12:12	45	Non-Exposed	52	52	52	52	52	52	52	52	52	52	52	52	52	52	52	52	52	52	52	52	52	52	52	52	52	52	52	52	51	50	51	47	45	50	44	42	49	41	38	48	38	36
				Exposed	52	52	52	52	52	52	52	52	52	52	52	52	52	52	52	52	52	51	52	50	48	52	47	46	52	43	41	52	40	37	50	36	34	47	34	32	44	32	0	41	0	0
	D	2:12	9.5	Non-Exposed	39	39	39	39	39	39	39	39	39	39	39	39	39	39	39	39	39	39	39	39	39	39	39	39	39	39	39	39	39	39	39	39	39	39	39	39	39	38	36	38	36	34
				Exposed	39	39	39	39	39	39	39	39	39	39	39	39	39	39	39	39	39	39	39	39	39	39	39	39	39	39	39	39	37	36	39	35	33	38	33	31	36	0	0	34	0	0
		3:12	14.0	Non-Exposed	37	37	37	37	37	37	37	37	37	37	37	37	37	37	37	37	37	37	37	37	37	37	37	37	37	37	37	37	37	37	37	37	37	37	37	37	37	37	36	37	36	34
				Exposed	37	37	37	37	37	37	37	37	37	37	37	37	37	37	37	37	37	37	37	37	37	37	37	37	37	37	37	37	37	36	37	35	33	37	33	31	36	0	0	34	0	0
		4:12	18.4	Non-Exposed	37	37	37	37	37	37	37	37	37	37	37	37	37	37	37	37	37	37	37	37	37	37	37	37	37	37	37	37	37	37	37	37	37	37	37	37	37	37	36	37	36	34
				Exposed	37	37	37	37	37	37	37	37	37	37	37	37	37	37	37	37	37	37	37	37	37	37	37	37	37	37	37	37	37	35	37	35	33	37	32	0	35	0	0	34	0	0
		5:12	22.6	Non-Exposed	38	38		38	38		38	38		38	38		38	38		38	38		38	38		38	38		38	38		38	38		38	38		38	38		38	38		38	38	
				Exposed	38	38		38	38		38	38		38	38		38	38		38	38		38	38		38	38		38	38		38	38		38	38		38	36		38	34		38	32	
		6:12	26.6	Non-Exposed	39	39		39	39		39	39		39	39		39	39		39	39		39	39		39	39		39	39		39	39		39	39		39	39		39	39		38	38	
				Exposed	39	39		39	39		39	39		39	39		39	39		39	39		39	39		39	39		39	39		39	39		39	38		39	36		39	34		38	32	
		7:12	30.3	Non-Exposed	41	41	41	41	41	41	41	41	41	41	41	41	41	41	41	41	41	41	41	41	41	41	41	41	41	41	41	41	41	41	41	41	41	41	39	37	40	37	35	39	34	32
				Exposed	41	41	41	41	41	41	41	41	41	41	41	41	41	41	41	41	41	41	41	41	41	41	41	41	41	39	37	41	36	34	41	33	31	41	31	0	40	0	0	37	0	0
		8:12	33.7	Non-Exposed	42	42	42	42	42	42	42	42	42	42	42	42	42	42	42	42	42	42	42	42	42	42	42	42	42	42	42	42	42	42	42	42	41	42	39	37	41	37	34	41	34	32
				Exposed	42	42	42	42	42	42	42	42	42	42	42	42	42	42	42	42	42	42	42	42	42	42	42	41	42	39	37	42	36	34	42	33	31	42	31	0	40	0	0	37	0	0
		9:12	36.9	Non-Exposed	44	44	44	44	44	44	44	44	44	44	44	44	44	44	44	44	44	44	44	44	44	44	44	44	44	44	44	44	44	44	44	43	41	44	39	37	43	37	34	42	34	32
				Exposed	44	44	44	44	44	44	44	44	44	44	44	44	44	44	44	44	44	44	44	43	41	44	39	37	44	36	34	44	33	31	42	31	0	39	0	0	37	0	0	37	0	0
		10:12	39.8	Non-Exposed	47	47	47	47	47	47	47	47	47	47	47	47	47	47	47	47	47	47	47	47	47	47	47	47	47	47	47	47	46	44	46	42	40	45	39	37	44	37	34	44	34	32
				Exposed	47	47	47	47	47	47	47	47	47	47	47	47	47	47	47	47	47	46	47	45	43	47	43	41	47	39	37	47	36	34	45	33	31	42	31	0	39	0	0	37	0	0
		11:12	42.5	Non-Exposed	49	49	49	49	49	49	49	49	49	49	49	49	49	49	49	49	49	49	49	49	49	49	49	49	49	49	49	49	46	44	48	42	40	47	39	37	46	36	34	45	34	32
				Exposed	49	49	49	49	49	49	49	49	49	49	49	49	49	49	48	49	47	46	49	45	43	49	43	41	49	39	37	49	36	33	45	33	31	42	31	0	39	0	0	37	0	0
		12:12	45	Non-Exposed	52	52	52	52	52	52	52	52	52	52	52	52	52	52	52	52	52	52	52	52	52	52	52	52	52	50	49	51	46	44	50	42	40	49	39	37	48	36	34	47	34	32
				Exposed	52	52	52	52	52	52	52	52	52	52	52	52	52	50	48	52	47	46	52	45	43	52	43	41	52	39	37	49	35	33	45	33	31	42	31	0	39	0	0	37	0	0

Tamarack 2.3 Rail – Hip Flush-Mount on 30 Foot Maximum Mean Roof Height – Portrait – Panel Length = 80 Inches or Less

Ground Snow Load	Exposure Category	Roof Pitch	Roof Angle	Wind Speed (mph)	95			100			105			110			115			120			125			130			140			150			160			170			180			190		
				Roof Area	1	2	3	1	2	3	1	2	3	1	2	3	1	2	3	1	2	3	1	2	3	1	2	3	1	2	3	1	2	3	1	2	3	1	2	3	1	2	3	1	2	3
60	B	2:12	9.5	Non-Exposed	37	37	37	37	37	37	37	37	37	37	37	37	37	37	37	37	37	37	37	37	37	37	37	37	37	37	37	37	37	37	37	37	37	37	37	37	37	37	37	37	37	37
				Exposed	37	37	37	37	37	37	37	37	37	37	37	37	37	37	37	37	37	37	37	37	37	37	37	37	37	37	37	37	37	37	37	37	37	37	37	37	37	37	37	37	37	36
		3:12	14.0	Non-Exposed	36	36	36	36	36	36	36	36	36	36	36	36	36	36	36	36	36	36	36	36	36	36	36	36	36	36	36	36	36	36	36	36	36	36	36	36	36	36	36	36	36	36
				Exposed	36	36	36	36	36	36	36	36	36	36	36	36	36	36	36	36	36	36	36	36	36	36	36	36	36	36	36	36	36	36	36	36	36	36	36	36	36	36	36	36	36	36
		4:12	18.4	Non-Exposed	36	36	36	36	36	36	36	36	36	36	36	36	36	36	36	36	36	36	36	36	36	36	36	36	36	36	36	36	36	36	36	36	36	36	36	36	36	36	36	36	36	36
				Exposed	36	36	36	36	36	36	36	36	36	36	36	36	36	36	36	36	36	36	36	36	36	36	36	36	36	36	36	36	36	36	36	36	36	36	36	36	36	36	36	36	36	36
		5:12	22.6	Non-Exposed	36	36		36	36		36	36		36	36		36	36		36	36		36	36		36	36		36	36		36	36		36	36		36	36		36	36		36	36	
				Exposed	36	36		36	36		36	36		36	36		36	36		36	36		36	36		36	36		36	36		36	36		36	36		36	36		36	36		36	36	
		6:12	26.6	Non-Exposed	38	38		38	38		38	38		38	38		38	38		38	38		38	38		38	38		38	38		38	38		38	38		38	38		38	38		38	38	
				Exposed	38	38		38	38		38	38		38	38		38	38		38	38		38	38		38	38		38	38		38	38		38	38		38	38		38	38		38	38	
		7:12	30.3	Non-Exposed	39	39	39	39	39	39	39	39	39	39	39	39	39	39	39	39	39	39	39	39	39	39	39	39	39	39	39	39	39	39	39	39	39	39	39	39	39	39	39	39	39	39
				Exposed	39	39	39	39	39	39	39	39	39	39	39	39	39	39	39	39	39	39	39	39	39	39	39	39	39	39	39	39	39	39	39	39	39	39	39	37	39	36	34	39	36	34
		8:12	33.7	Non-Exposed	41	41	41	41	41	41	41	41	41	41	41	41	41	41	41	41	41	41	41	41	41	41	41	41	41	41	41	41	41	41	41	41	41	41	41	41	41	41	41	41	41	41
				Exposed	41	41	41	41	41	41	41	41	41	41	41	41	41	41	41	41	41	41	41	41	41	41	41	41	41	41	41	41	41	41	41	41	40	41	39	37	41	36	34	41	36	34
		9:12	36.9	Non-Exposed	43	43	43	43	43	43	43	43	43	43	43	43	43	43	43	43	43	43	43	43	43	43	43	43	43	43	43	43	43	43	43	43	43	43	43	43	43	43	43	43	43	43
				Exposed	43	43	43	43	43	43	43	43	43	43	43	43	43	43	43	43	43	43	43	43	43	43	43	43	43	43	43	43	43	43	43	42	40	43	39	37	43	36	34	43	36	34
		10:12	39.8	Non-Exposed	45	45	45	45	45	45	45	45	45	45	45	45	45	45	45	45	45	45	45	45	45	45	45	45	45	45	45	45	45	45	45	45	45	45	45	45	45	45	45	45	45	45
				Exposed	45	45	45	45	45	45	45	45	45	45	45	45	45	45	45	45	45	45	45	45	45	45	45	45	45	45	45	45	45	45	45	42	40	45	39	37	45	36	34	45	36	34
		11:12	42.5	Non-Exposed	47	47	47	47	47	47	47	47	47	47	47	47	47	47	47	47	47	47	47	47	47	47	47	47	47	47	47	47	47	47	47	47	47	47	47	47	47	47	47	47	47	45
				Exposed	47	47	47	47	47	47	47	47	47	47	47	47	47	47	47	47	47	47	47	47	47	47	47	47	47	47	47	47	47	47	47	45	43	47	42	40	47	39	37	47	36	34
		12:12	45	Non-Exposed	50	50	50	50	50	50	50	50	50	50	50	50	50	50	50	50	50	50	50	50	50	50	50	50	50	50	50	50	50	50	50	50	50	50	50	50	49	49	47	45	49	45
				Exposed	50	50	50	50	50	50	50	50	50	50	50	50	50	50	50	50	50	50	50	50	50	50	50	50	50	50	50	50	49	48	50	45	43	50	42	40	50	39	37	49	36	34
	C	2:12	9.5	Non-Exposed	37	37	37	37	37	37	37	37	37	37	37	37	37	37	37	37	37	37	37	37	37	37	37	37	37	37	37	37	37	37	37	37	37	37	37	37	37	37	37	37	37	37
				Exposed	37	37	37	37	37	37	37	37	37	37	37	37	37	37	37	37	37	37	37	37	37	37	37	37	37	37	37	37	37	37	37	37	36	37	36	34	37	33	32	37	32	0
		3:12	14.0	Non-Exposed	36	36	36	36	36	36	36	36	36	36	36	36	36	36	36	36	36	36	36	36	36	36	36	36	36	36	36	36	36	36	36	36	36	36	36	36	36	36	36	36	36	36
				Exposed	36	36	36	36	36	36	36	36	36	36	36	36	36	36	36	36	36	36	36	36	36	36	36	36	36	36	36	36	36	36	36	35	34	36	33	32	36	32	0	36	32	0
		4:12	18.4	Non-Exposed	36	36	36	36	36	36	36	36	36	36	36	36	36	36	36	36	36	36	36	36	36	36	36	36	36	36	36	36	36	36	36	36	36	36	36	36	36	36	36	36	36	36
				Exposed	36	36	36	36	36	36	36	36	36	36	36	36	36	36	36	36	36	36	36	36	36	36	36	36	36	36	36	36	36	36	36	35	34	36	33	32	36	32	0	36	32	0
		5:12	22.6	Non-Exposed	36	36		36	36		36	36		36	36		36	36		36	36		36	36		36	36		36	36		36	36		36	36		36	36		36	36		36	36	
				Exposed	36	36		36	36		36	36		36	36		36	36		36	36		36	36		36	36		36	36		36	36		36	36		36	36		36	35				
		6:12	26.6	Non-Exposed	38	38		38	38		38	38		38	38		38	38		38	38		38	38		38	38		38	38		38	38		38	38		38	38		38	38		38	38	
				Exposed	38	38		38	38		38	38		38	38		38	38		38	38		38	38		38	38		38	38		38	38		38	38		38	38		38	37		38	35	
60		7:12	30.3	Non-Exposed	39	39	39	39	39	39	39	39	39	39	39	39	39	39	39	39	39	39	39	39	39	39	39	39	39	39	39	39	39	39	39	39	39	39	39	39	39	39	39	39	38	36
				Exposed	39	39	39	39	39	39	39	39	39	39	39	39	39	39	39	39	39	39	39	39	39	39	39	39	39	39	39	39	39	38	39	37	34	39	34	32	39	32	0	39	0	0
		8:12	33.7	Non-Exposed	41	41	41	41	41	41	41	41	41	41	41	41	41	41	41	41	41	41	41	41	41	41	41	41	41	41	41	41	41	41	41	41	41	41	41	39	41	38	36	41	38	36
				Exposed	41	41	41	41	41	41	41	41	41	41	41	41	41	41	41	41	41	41	41	41	41	41	41	41	41	41	41	41	40	38	41	37	34	41	34	32	41	32	0	41	0	0
		9:12	36.9	Non-Exposed	43	43	43	43	43	43	43	43	43	43	43	43	43	43	43	43	43	43	43	43	43	43	43	43	43	43	43	43	43	43	43	43	43	43	43	42	43	41	39	42	38	36
				Exposed	43	43	43	43	43	43	43	43	43	43	43	43	43	43	43	43	43	43	43	43	43	43	43	43	43	43	41	43	40	38	43	37	34	43	34	32	43	32	0	41	0	0
		10:12	39.8	Non-Exposed	45	45	45	45	45	45	45	45	45	45	45	45	45	45	45	45	45	45	45	45	45	45	45	45	45	45	45	45	45	45	45	45	45	45	44	42	44	41	39	44	38	36
				Exposed	45	45	45	45	45	45	45	45	45	45	45	45	45	45	45	45	45	45	45	45	45	45	45	45	45	43	41	45	40	37	45	36	34	45	34	32	44	32	0	41	0	0
		11:12	42.5	Non-Exposed	47	47	47	47	47	47	47	47	47	47	47	47	47	47	47	47	47	47	47	47	47	47	47	47	47	47	47	47	47	47	47	47	46	47	44	42	46	41	39	45	38	36
				Exposed	47	47	47	47	47	47	47	47	47	47	47	47	47	47	47	47	47	47	47	47	47	47	47	46	47	43	41	47	40	37	47	36	34	47	34	32	44	32	0	41	0	0
		12:12	45	Non-Exposed	50	50	50	50	50	50	50	50	50	50	50	50	50	50	50	50	50	50	50	50	50	50	50	50	50	50	50	50	50	50	49	47	45	49	44	42	48	41	38	47	38	36
				Exposed	50	50	50	50	50	50	50	50	50	50	50	50	50	50	50	50	50	50	50	50	48	50	47	46	50	43	41	50	40	37	49	36	34	47	34	32	44	32	0	41	0	0
	D	2:12	9.5	Non-Exposed	37	37	37	37	37	37	37	37	37	37	37	37	37	37	37	37	37	37	37	37	37	37	37	37	37	37	37	37	37	37	37	37	37	37	37	37	37	36	37	36	34
				Exposed	37	37	37	37	37	37	37	37	37	37	37	37	37	37	37	37	37	37	37	37	37	37	37	37	37	37	37	37	37	36	37	35	33	37	33	31	36	0	0	34	0	0
		3:12	14.0	Non-Exposed	36	36	36	36	36	36	36	36	36	36	36	36	36	36	36	36	36	36	36	36	36	36	36	36	36	36	36	36	36	36	36	36	36	36	36	36	36	36	36	36	36	34
				Exposed	36	36	36	36	36	36	36	36	36	36	36	36	36	36	36	36	36	36	36	36	36	36	36	36	36	36	36	36	36	36	36	35	33	36	33	31	36	0	0	34	0	0
		4:12	18.4	Non-Exposed	36	36	36	36	36	36	36	36	36	36	36	36	36	36	36	36	36	36	36	36	36	36	36	36	36	36	36	36	36	36	36	36	36	36	36	36	36	36	36	36	36	34
				Exposed	36	36	36	36	36	36	36	36	36	36	36	36	36	36	36	36	36	36	36	36	36	36	36	36	36	36	36	36	36	35	36	35	33	36	32	0	35	0	0	34	0	0
		5:12	22.6	Non-Exposed	36	36		36	36		36	36		36	36		36	36		36	36		36	36		36	36		36	36		36	36		36	36		36	36		36	36		36	36	
				Exposed	36	36		36	36		36	36		36	36		36	36		36	36		36	36		36	36		36	36		36	36		36	36		36	36		36	34		36	32	
		6:12	26.6	Non-Exposed	38	38		38	38		38	38		38	38		38	38		38	38		38	38		38	38		38	38		38	38		38	38		38	38		38	38		37	37	
				Exposed	38	38		38	38		38	38		38	38		38	38		38	38		38	38		38	38		38	38		38	38		38	38		38	36		38	34		37	32	
		7:12	30.3	Non-Exposed	39	39	39	39	39	39	39	39	39	39	39	39	39	39	39	39	39	39	39	39	39	39	39	39	39	39	39	39	39	39	39	39	39	39	39	39	39	37	35	38	34	32
				Exposed	39	39	39	39	39	39	39	39	39	39	39	39	39	39	39	39	39	39	39	39	39	39	39	39	39	39	37	39	36	34	39	33	31	39	31	0	39	0	0	37	0	0
		8:12	33.7	Non-Exposed	41	41	41	41	41	41	41	41	41	41	41	41	41	41	41	41	41	41	41	41	41	41	41	41	41	41	41	41	41	41	41	41	41	41	39	37	40	37	34	40	34	32
				Exposed	41	41	41	41	41	41	41	41	41	41	41	41	41	41	41	41	41	41	41	41	41	41	41	41	41	39	37	41	36	34	41	33	31	41	31	0	40	0	0	37	0	0
		9:12	36.9	Non-Exposed	43	43	43	43	43	43	43	43	43	43	43	43	43	43	43	43	43	43	43	43	43	43	43	43	43	43	43	43	43	43	43	43	41	42	39	37	42	37	34	41	34	32
				Exposed	43	43	43	43	43	43	43	43	43	43	43	43	43	43	43	43	43	43	43	43	43	43	43	41	43	39	37	43	36	34	43	33	31	42	31	0	39	0	0	37	0	0
		10:12	39.8	Non-Exposed	45	45	45	45	45	45	45	45	45	45	45	45	45	45	45	45	45	45	45	45	45	45	45	45	45	45	45	45	45	44	45	42	40	44	39	37	43	37	34	42	34	32
				Exposed	45	45	45	45	45	45	45	45	45	45	45	45	45	45	45	45	45	45	45	45	43	45	43	41	45	39	37	45	36	34	45	33	31	42	31	0	39	0	0	37	0	0
		11:12	42.5	Non-Exposed	47	47	47	47	47	47	47	47	47	47	47	47	47	47	47	47	47	47	47	47	47	47	47	47	47	47	47	47	46	44	46	42	40	46	39	37	45	36	34	44	34	32
				Exposed	47	47	47	47	47	47	47	47	47	47	47	47	47	47	47	47	47	46	47	45	43	47	43	41	47	39	37	47	36	33	45	33	31	42	31	0	39	0	0	37	0	0
		12:12	45	Non-Exposed	50	50	50	50	50	50	50	50	50	50	50	50	50	50	50	50	50	50	50	50	50	50	50	50	50	50	49	49	46	44	48	42	40	47	39	37	46	36	34	45	34	32
				Exposed	50	50	50	50	50	50	50	50	50	50	50	50	50	50	48	50	47	46	50	45	43	50	43	41	50	39	37	49	35	33	45	33	31	42	31	0	39	0	0	37	0	0

Tamarack 2.3 Rail – Hip Flush-Mount on 30 Foot Maximum Mean Roof Height – Portrait – Panel Length = 80 Inches or Less

Ground Snow Load	Exposure Category	Roof Pitch	Roof Angle	Wind Speed (mph)	95			100			105			110			115			120			125			130			140			150			160			170			180			190		
				Roof Area	1	2	3	1	2	3	1	2	3	1	2	3	1	2	3	1	2	3	1	2	3	1	2	3	1	2	3	1	2	3	1	2	3	1	2	3	1	2	3	1	2	3
70	B	2:12	9.5	Non-Exposed	34	34	34	34	34	34	34	34	34	34	34	34	34	34	34	34	34	34	34	34	34	34	34	34	34	34	34	34	34	34	34	34	34	34	34	34	34	34	34	34	34	34
				Exposed	34	34	34	34	34	34	34	34	34	34	34	34	34	34	34	34	34	34	34	34	34	34	34	34	34	34	34	34	34	34	34	34	34	34	34	34	34	34	34	34	34	34
		3:12	14.0	Non-Exposed	33	33	33	33	33	33	33	33	33	33	33	33	33	33	33	33	33	33	33	33	33	33	33	33	33	33	33	33	33	33	33	33	33	33	33	33	33	33	33	33	33	33
				Exposed	33	33	33	33	33	33	33	33	33	33	33	33	33	33	33	33	33	33	33	33	33	33	33	33	33	33	33	33	33	33	33	33	33	33	33	33	33	33	33	33	33	33
		4:12	18.4	Non-Exposed	33	33	33	33	33	33	33	33	33	33	33	33	33	33	33	33	33	33	33	33	33	33	33	33	33	33	33	33	33	33	33	33	33	33	33	33	33	33	33	33	33	33
				Exposed	33	33	33	33	33	33	33	33	33	33	33	33	33	33	33	33	33	33	33	33	33	33	33	33	33	33	33	33	33	33	33	33	33	33	33	33	33	33	33	33	33	33
		5:12	22.6	Non-Exposed	34	34		34	34		34	34		34	34		34	34		34	34		34	34		34	34		34	34		34	34		34	34		34	34		34	34		34	34	
				Exposed	34	34		34	34		34	34		34	34		34	34		34	34		34	34		34	34		34	34		34	34		34	34		34	34		34	34		34	34	
		6:12	26.6	Non-Exposed	35	35		35	35		35	35		35	35		35	35		35	35		35	35		35	35		35	35		35	35		35	35		35	35		35	35		35	35	
				Exposed	35	35		35	35		35	35		35	35		35	35		35	35		35	35		35	35		35	35		35	35		35	35		35	35		35	35		35	35	
		7:12	30.3	Non-Exposed	36	36	36	36	36	36	36	36	36	36	36	36	36	36	36	36	36	36	36	36	36	36	36	36	36	36	36	36	36	36	36	36	36	36	36	36	36	36	36	36	36	36
				Exposed	36	36	36	36	36	36	36	36	36	36	36	36	36	36	36	36	36	36	36	36	36	36	36	36	36	36	36	36	36	36	36	36	36	36	36	36	36	36	36	36	36	34
		8:12	33.7	Non-Exposed	38	38	38	38	38	38	38	38	38	38	38	38	38	38	38	38	38	38	38	38	38	38	38	38	38	38	38	38	38	38	38	38	38	38	38	38	38	38	38	38	38	38
				Exposed	38	38	38	38	38	38	38	38	38	38	38	38	38	38	38	38	38	38	38	38	38	38	38	38	38	38	38	38	38	38	38	38	38	38	38	37	38	36	34	38	36	34
		9:12	36.9	Non-Exposed	40	40	40	40	40	40	40	40	40	40	40	40	40	40	40	40	40	40	40	40	40	40	40	40	40	40	40	40	40	40	40	40	40	40	40	40	40	40	40	40	40	40
				Exposed	40	40	40	40	40	40	40	40	40	40	40	40	40	40	40	40	40	40	40	40	40	40	40	40	40	40	40	40	40	40	40	40	40	40	39	37	40	36	34	40	36	34
		10:12	39.8	Non-Exposed	42	42	42	42	42	42	42	42	42	42	42	42	42	42	42	42	42	42	42	42	42	42	42	42	42	42	42	42	42	42	42	42	42	42	42	42	42	42	42	42	42	42
				Exposed	42	42	42	42	42	42	42	42	42	42	42	42	42	42	42	42	42	42	42	42	42	42	42	42	42	42	42	42	42	40	42	42	42	42	39	37	42	36	34	42	36	34
		11:12	42.5	Non-Exposed	44	44	44	44	44	44	44	44	44	44	44	44	44	44	44	44	44	44	44	44	44	44	44	44	44	44	44	44	44	44	44	44	44	44	44	44	44	44	44	44	44	44
				Exposed	44	44	44	44	44	44	44	44	44	44	44	44	44	44	44	44	44	44	44	44	44	44	44	44	44	44	44	44	44	44	44	44	43	44	42	40	44	39	37	44	36	34
		12:12	45	Non-Exposed	47	47	47	47	47	47	47	47	47	47	47	47	47	47	47	47	47	47	47	47	47	47	47	47	47	47	47	47	47	47	47	47	47	47	47	47	47	47	47	47	47	45
				Exposed	47	47	47	47	47	47	47	47	47	47	47	47	47	47	47	47	47	47	47	47	47	47	47	47	47	47	47	47	47	47	47	45	43	47	42	40	47	39	37	47	36	34
	C	2:12	9.5	Non-Exposed	34	34	34	34	34	34	34	34	34	34	34	34	34	34	34	34	34	34	34	34	34	34	34	34	34	34	34	34	34	34	34	34	34	34	34	34	34	34	34	34	34	34
				Exposed	34	34	34	34	34	34	34	34	34	34	34	34	34	34	34	34	34	34	34	34	34	34	34	34	34	34	34	34	34	34	34	34	34	34	33	32	34	32	0	34	32	0
		3:12	14.0	Non-Exposed	33	33	33	33	33	33	33	33	33	33	33	33	33	33	33	33	33	33	33	33	33	33	33	33	33	33	33	33	33	33	33	33	33	33	33	33	33	33	33	33	33	33
				Exposed	33	33	33	33	33	33	33	33	33	33	33	33	33	33	33	33	33	33	33	33	33	33	33	33	33	33	33	33	33	33	33	33	33	33	33	32	33	32	0	33	32	0
		4:12	18.4	Non-Exposed	33	33	33	33	33	33	33	33	33	33	33	33	33	33	33	33	33	33	33	33	33	33	33	33	33	33	33	33	33	33	33	33	33	33	33	33	33	33	33	33	33	33
				Exposed	33	33	33	33	33	33	33	33	33	33	33	33	33	33	33	33	33	33	33	33	33	33	33	33	33	33	33	33	33	33	33	33	33	33	33	32	33	32	0	33	32	0
		5:12	22.6	Non-Exposed	34	34		34	34		34	34		34	34		34	34		34	34		34	34		34	34		34	34		34	34		34	34		34	34		34	34		34	34	
				Exposed	34	34		34	34		34	34		34	34		34	34		34	34		34	34		34	34		34	34		34	34		34	34		34	34		34	34		34	34	
		6:12	26.6	Non-Exposed	35	35		35	35		35	35		35	35		35	35		35	35		35	35		35	35		35	35		35	35		35	35		35	35		35	35		35	35	
				Exposed	35	35		35	35		35	35		35	35		35	35		35	35		35	35		35	35		35	35		35	35		35	35		35	35		35	35		35	35	
		7:12	30.3	Non-Exposed	36	36	36	36	36	36	36	36	36	36	36	36	36	36	36	36	36	36	36	36	36	36	36	36	36	36	36	36	36	36	36	36	36	36	36	36	36	36	36	36	36	36
				Exposed	36	36	36	36	36	36	36	36	36	36	36	36	36	36	36	36	36	36	36	36	36	36	36	36	36	36	36	36	36	36	36	36	36	36	34	32	36	32	0	36	0	0
		8:12	33.7	Non-Exposed	38	38	38	38	38	38	38	38	38	38	38	38	38	38	38	38	38	38	38	38	38	38	38	38	38	38	38	38	38	38	38	38	38	38	38	38	38	38	38	38	38	36
				Exposed	38	38	38	38	38	38	38	38	38	38	38	38	38	38	38	38	38	38	38	38	38	38	38	38	38	38	38	38	38	37	34	38	34	32	38	32	0	38	0	0
		9:12	36.9	Non-Exposed	40	40	40	40	40	40	40	40	40	40	40	40	40	40	40	40	40	40	40	40	40	40	40	40	40	40	40	40	40	40	40	40	40	40	40	39	40	38	36	40	38	36
				Exposed	40	40	40	40	40	40	40	40	40	40	40	40	40	40	40	40	40	40	40	40	40	40	40	40	40	40	40	40	40	38	40	37	34	40	34	32	40	32	0	40	0	0
		10:12	39.8	Non-Exposed	42	42	42	42	42	42	42	42	42	42	42	42	42	42	42	42	42	42	42	42	42	42	42	42	42	42	42	42	42	42	42	42	42	42	42	41	42	38	36	41	38	36
				Exposed	42	42	42	42	42	42	42	42	42	42	42	42	42	42	42	42	42	42	42	42	42	42	42	42	42	42	41	42	40	37	42	36	34	42	34	32	42	32	0	41	0	0
		11:12	42.5	Non-Exposed	44	44	44	44	44	44	44	44	44	44	44	44	44	44	44	44	44	44	44	44	44	44	44	44	44	44	44	44	44	44	44	44	44	44	44	41	44	38	36	41	38	36
				Exposed	44	44	44	44	44	44	44	44	44	44	44	44	44	44	44	44	44	44	44	44	44	44	44	44	44	43	41	44	40	37	44	36	34	44	34	32	44	32	0	41	0	0
		12:12	45	Non-Exposed	47	47	47	47	47	47	47	47	47	47	47	47	47	47	47	47	47	47	47	47	47	47	47	47	47	47	47	47	47	47	47	45	46	44	42	45	41	38	45	38	36
				Exposed	47	47	47	47	47	47	47	47	47	47	47	47	47	47	47	47	47	47	47	47	47	47	47	46	47	43	41	47	40	37	47	36	34	46	34	32	44	32	0	41	0	0
	D	2:12	9.5	Non-Exposed	34	34	34	34	34	34	34	34	34	34	34	34	34	34	34	34	34	34	34	34	34	34	34	34	34	34	34	34	34	34	34	34	34	34	34	34	34	34	34	34	34	34
				Exposed	34	34	34	34	34	34	34	34	34	34	34	34	34	34	34	34	34	34	34	34	34	34	34	34	34	34	34	34	34	34	34	34	33	34	33	31	34	0	0	34	0	0
		3:12	14.0	Non-Exposed	33	33	33	33	33	33	33	33	33	33	33	33	33	33	33	33	33	33	33	33	33	33	33	33	33	33	33	33	33	33	33	33	33	33	33	33	33	33	33	33	33	33
				Exposed	33	33	33	33	33	33	33	33	33	33	33	33	33	33	33	33	33	33	33	33	33	33	33	33	33	33	33	33	33	33	33	33	33	33	33	31	33	0	0	33	0	0
		4:12	18.4	Non-Exposed	33	33	33	33	33	33	33	33	33	33	33	33	33	33	33	33	33	33	33	33	33	33	33	33	33	33	33	33	33	33	33	33	33	33	33	33	33	33	33	33	33	33
				Exposed	33	33	33	33	33	33	33	33	33	33	33	33	33	33	33	33	33	33	33	33	33	33	33	33	33	33	33	33	33	33	33	33	33	33	32	0	33	0	0	33	0	0
		5:12	22.6	Non-Exposed	34	34		34	34		34	34		34	34		34	34		34	34		34	34		34	34		34	34		34	34		34	34		34	34		34	34		34	34	
				Exposed	34	34		34	34		34	34		34	34		34	34		34	34		34	34		34	34		34	34		34	34		34	34		34	34		34	34		34	32	
		6:12	26.6	Non-Exposed	35	35		35	35		35	35		35	35		35	35		35	35		35	35		35	35		35	35		35	35		35	35		35	35		35	35		35	35	
				Exposed	35	35		35	35		35	35		35	35		35	35		35	35		35	35		35	35		35	35		35	35		35	35		35	35		35	34		35	32	
		7:12	30.3	Non-Exposed	36	36	36	36	36	36	36	36	36	36	36	36	36	36	36	36	36	36	36	36	36	36	36	36	36	36	36	36	36	36	36	36	36	36	36	35	36	34	32	36	34	32
				Exposed	36	36	36	36	36	36	36	36	36	36	36	36	36	36	36	36	36	36	36	36	36	36	36	36	36	36	36	36	36	34	36	33	31	36	31	0	36	0	0	36	0	0
		8:12	33.7	Non-Exposed	38	38	38	38	38	38	38	38	38	38	38	38	38	38	38	38	38	38	38	38	38	38	38	38	38	38	38	38	38	38	38	38	38	38	38	37	38	34	32	37	34	32
				Exposed	38	38	38	38	38	38	38	38	38	38	38	38	38	38	38	38	38	38	38	38	38	38	38	38	38	38	37	38	36	34	38	33	31	38	31	0	38	0	0	37	0	0
		9:12	36.9	Non-Exposed	40	40	40	40	40	40	40	40	40	40	40	40	40	40	40	40	40	40	40	40	40	40	40	40	40	40	40	40	40	40	40	40	40	40	39	37	39	37	34	39	34	32
				Exposed	40	40	40	40	40	40	40	40	40	40	40	40	40	40	40	40	40	40	40	40	40	40	40	40	40	39	37	40	36	34	40	33	31	40	31	0	39	0	0	37	0	0
		10:12	39.8	Non-Exposed	42	42	42	42	42	42	42	42	42	42	42	42	42	42	42	42	42	42	42	42	42	42	42	42	42	42	42	42	42	42	42	42	40	42	39	37	41	37	34	40	34	32
				Exposed	42	42	42	42	42	42	42	42	42	42	42	42	42	42	42	42	42	42	42	42	42	42	42	41	42	39	37	42	36	34	42	33	31	42	31	0	39	0	0	37	0	0
		11:12	42.5	Non-Exposed	44	44	44	44	44	44	44	44	44	44	44	44	44	44	44	44	44	44	44	44	44	44	44	44	44	44	44	44	44	44	44	42	40	43	39	37	43	36	34	42	34	32
				Exposed	44	44	44	44	44	44	44	44	44	44	44	44	44	44	44	44	44	44	44	44	43	44	43	41	44	39	37	44	36	33	44	33	31	42	31	0	39	0	0	37	0	0
		12:12	45	Non-Exposed	47	47	47	47	47	47	47	47	47	47	47	47	47	47	47	47	47	47	47	47	47	47	47	47	47	47	47	47	46	44	46	42	40	45	39	37	44	36	34	43	34	32
				Exposed	47	47	47	47	47	47	47	47	47	47	47	47	47	47	47	47	47	46	47	45	43	47	43	41	47	39	37	47	35	33	45	33	31	42	31	0	39	0	0	37	0	0

Tamarack 2.3 Rail – Hip Flush-Mount on 30 Foot Maximum Mean Roof Height – Portrait – Panel Length = 80 Inches or Less

Ground Snow Load	Exposure Category	Roof Pitch	Roof Angle	Wind Speed (mph)	95			100			105			110			115			120			125			130			140			150			160			170			180			190		
				Roof Area	1	2	3	1	2	3	1	2	3	1	2	3	1	2	3	1	2	3	1	2	3	1	2	3	1	2	3	1	2	3	1	2	3	1	2	3	1	2	3	1	2	3
80	B	2:12	9.5	Non-Exposed	32	32	32	32	32	32	32	32	32	32	32	32	32	32	32	32	32	32	32	32	32	32	32	32	32	32	32	32	32	32	32	32	32	32	32	32	32	32	32	32	32	32
				Exposed	32	32	32	32	32	32	32	32	32	32	32	32	32	32	32	32	32	32	32	32	32	32	32	32	32	32	32	32	32	32	32	32	32	32	32	32	32	32	32	32	32	32
		3:12	14.0	Non-Exposed	31	31	31	31	31	31	31	31	31	31	31	31	31	31	31	31	31	31	31	31	31	31	31	31	31	31	31	31	31	31	31	31	31	31	31	31	31	31	31	31	31	31
				Exposed	31	31	31	31	31	31	31	31	31	31	31	31	31	31	31	31	31	31	31	31	31	31	31	31	31	31	31	31	31	31	31	31	31	31	31	31	31	31	31	31	31	31
		4:12	18.4	Non-Exposed	31	31	31	31	31	31	31	31	31	31	31	31	31	31	31	31	31	31	31	31	31	31	31	31	31	31	31	31	31	31	31	31	31	31	31	31	31	31	31	31	31	31
				Exposed	31	31	31	31	31	31	31	31	31	31	31	31	31	31	31	31	31	31	31	31	31	31	31	31	31	31	31	31	31	31	31	31	31	31	31	31	31	31	31	31	31	31
		5:12	22.6	Non-Exposed	32	32		32	32		32	32		32	32		32	32		32	32		32	32		32	32		32	32		32	32		32	32		32	32		32	32		32	32	
				Exposed	32	32		32	32		32	32		32	32		32	32		32	32		32	32		32	32		32	32		32	32		32	32		32	32		32	32		32	32	
		6:12	26.6	Non-Exposed	33	33		33	33		33	33		33	33		33	33		33	33		33	33		33	33		33	33		33	33		33	33		33	33		33	33		33	33	
				Exposed	33	33		33	33		33	33		33	33		33	33		33	33		33	33		33	33		33	33		33	33		33	33		33	33		33	33		33	33	
		7:12	30.3	Non-Exposed	34	34	34	34	34	34	34	34	34	34	34	34	34	34	34	34	34	34	34	34	34	34	34	34	34	34	34	34	34	34	34	34	34	34	34	34	34	34	34	34	34	34
				Exposed	34	34	34	34	34	34	34	34	34	34	34	34	34	34	34	34	34	34	34	34	34	34	34	34	34	34	34	34	34	34	34	34	34	34	34	34	34	34	34	34	34	34
		8:12	33.7	Non-Exposed	35	35	35	35	35	35	35	35	35	35	35	35	35	35	35	35	35	35	35	35	35	35	35	35	35	35	35	35	35	35	35	35	35	35	35	35	35	35	35	35	35	35
				Exposed	35	35	35	35	35	35	35	35	35	35	35	35	35	35	35	35	35	35	35	35	35	35	35	35	35	35	35	35	35	35	35	35	35	35	35	35	35	35	35	35	35	34
		9:12	36.9	Non-Exposed	37	37	37	37	37	37	37	37	37	37	37	37	37	37	37	37	37	37	37	37	37	37	37	37	37	37	37	37	37	37	37	37	37	37	37	37	37	37	37	37	37	37
				Exposed	37	37	37	37	37	37	37	37	37	37	37	37	37	37	37	37	37	37	37	37	37	37	37	37	37	37	37	37	37	37	37	37	37	37	37	37	37	37	37	37	36	34
		10:12	39.8	Non-Exposed	39	39	39	39	39	39	39	39	39	39	39	39	39	39	39	39	39	39	39	39	39	39	39	39	39	39	39	39	39	39	39	39	39	39	39	39	39	39	39	39	39	39
				Exposed	39	39	39	39	39	39	39	39	39	39	39	39	39	39	39	39	39	39	39	39	39	39	39	39	39	39	39	39	39	39	39	39	37	39	39	37	39	39	37	39	36	34
		11:12	42.5	Non-Exposed	41	41	41	41	41	41	41	41	41	41	41	41	41	41	41	41	41	41	41	41	41	41	41	41	41	41	41	41	41	41	41	41	41	41	41	41	41	41	41	41	38	34
				Exposed	41	41	41	41	41	41	41	41	41	41	41	41	41	41	41	41	41	41	41	41	41	41	41	41	41	41	41	41	41	41	41	41	40	37	41	36	34	41	34	32	41	32	0	41	0	0
		12:12	45	Non-Exposed	44	44	44	44	44	44	44	44	44	44	44	44	44	44	44	44	44	44	44	44	44	44	44	44	44	44	44	44	44	44	44	44	44	44	44	44	44	44	42	43	41	38	43	38	36
				Exposed	44	44	44	44	44	44	44	44	44	44	44	44	44	44	44	44	44	44	44	44	44	44	44	44	44	43	41	44	40	37	44	36	34	44	34	32	43	32	0	41	0	0
	C	2:12	9.5	Non-Exposed	32	32	32	32	32	32	32	32	32	32	32	32	32	32	32	32	32	32	32	32	32	32	32	32	32	32	32	32	32	32	32	32	32	32	32	32	32	32	32	32	32	32
				Exposed	32	32	32	32	32	32	32	32	32	32	32	32	32	32	32	32	32	32	32	32	32	32	32	32	32	32	32	32	32	32	32	32	32	32	32	32	32	32	32	32	32	0
		3:12	14.0	Non-Exposed	31	31	31	31	31	31	31	31	31	31	31	31	31	31	31	31	31	31	31	31	31	31	31	31	31	31	31	31	31	31	31	31	31	31	31	31	31	31	31	31	31	31
				Exposed	31	31	31	31	31	31	31	31	31	31	31	31	31	31	31	31	31	31	31	31	31	31	31	31	31	31	31	31	31	31	31	31	31	31	31	31	31	31	31	31	31	0
		4:12	18.4	Non-Exposed	31	31	31	31	31	31	31	31	31	31	31	31	31	31	31	31	31	31	31	31	31	31	31	31	31	31	31	31	31	31	31	31	31	31	31	31	31	31	31	31	31	31
				Exposed	31	31	31	31	31	31	31	31	31	31	31	31	31	31	31	31	31	31	31	31	31	31	31	31	31	31	31	31	31	31	31	31	31	31	31	31	31	31	31	31	31	0
		5:12	22.6	Non-Exposed	32	32		32	32		32	32		32	32		32	32		32	32		32	32		32	32		32	32		32	32		32	32		32	32		32	32		32	32	
				Exposed	32	32		32	32		32	32		32	32		32	32		32	32		32	32		32	32		32	32		32	32		32	32		32	32		32	32		32	32	
		6:12	26.6	Non-Exposed	33	33		33	33		33	33		33	33		33	33		33	33		33	33		33	33		33	33		33	33		33	33		33	33		33	33		33	33	
				Exposed	33	33		33	33		33	33		33	33		33	33		33	33		33	33		33	33		33	33		33	33		33	33		33	33		33	33		33	33	
		7:12	30.3	Non-Exposed	34	34	34	34	34	34	34	34	34	34	34	34	34	34	34	34	34	34	34	34	34	34	34	34	34	34	34	34	34	34	34	34	34	34	34	34	34	34	34	34	34	34
				Exposed	34	34	34	34	34	34	34	34	34	34	34	34	34	34	34	34	34	34	34	34	34	34	34	34	34	34	34	34	34	34	34	34	32	34	32	0	34	0	0	34	0	0
		8:12	33.7	Non-Exposed	35	35	35	35	35	35	35	35	35	35	35	35	35	35	35	35	35	35	35	35	35	35	35	35	35	35	35	35	35	35	35	35	35	35	35	35	35	35	35	35	35	35
				Exposed	35	35	35	35	35	35	35	35	35	35	35	35	35	35	35	35	35	35	35	35	35	35	35	35	35	35	35	35	35	34	35	34	32	35	32	0	35	0	0	35	0	0
		9:12	36.9	Non-Exposed	37	37	37	37	37	37	37	37	37	37	37	37	37	37	37	37	37	37	37	37	37	37	37	37	37	37	37	37	37	37	37	37	37	37	37	37	37	37	37	37	37	36
				Exposed	37	37	37	37	37	37	37	37	37	37	37	37	37	37	37	37	37	37	37	37	37	37	37	37	37	37	37	37	37	34	37	34	32	37	32	0	37	0	0	37	0	0
		10:12	39.8	Non-Exposed	39	39	39	39	39	39	39	39	39	39	39	39	39	39	39	39	39	39	39	39	39	39	39	39	39	39	39	39	39	39	39	39	39	39	39	39	39	39	39	39	38	36
				Exposed	39	39	39	39	39	39	39	39	39	39	39	39	39	39	39	39	39	39	39	39	39	39	39	39	39	39	39	39	37	39	36	34	39	34	32	39	32	0	39	0	0	0
		11:12	42.5	Non-Exposed	41	41	41	41	41	41	41	41	41	41	41	41	41	41	41	41	41	41	41	41	41	41	41	41	41	41	41	41	41	41	41	41	41	41	41	41	41	41	41	41	39	41	38	36
				Exposed	41	41	41	41	41	41	41	41	41	41	41	41	41	41	41	41	41	41	41	41	41	41	41	41	41	41	41	41	40	37	41	36	34	41	34	32	41	32	0	41	0	0
		12:12	45	Non-Exposed	44	44	44	44	44	44	44	44	44	44	44	44	44	44	44	44	44	44	44	44	44	44	44	44	44	44	44	44	44	44	44	44	44	44	44	42	43	41	38	43	38	36
				Exposed	44	44	44	44	44	44	44	44	44	44	44	44	44	44	44	44	44	44	44	44	44	44	44	44	44	43	41	44	40	37	44	36	34	44	34	32	43	32	0	41	0	0
	D	2:12	9.5	Non-Exposed	32	32	32	32	32	32	32	32	32	32	32	32	32	32	32	32	32	32	32	32	32	32	32	32	32	32	32	32	32	32	32	32	32	32	32	32	32	32	32	32	32	32
				Exposed	32	32	32	32	32	32	32	32	32	32	32	32	32	32	32	32	32	32	32	32	32	32	32	32	32	32	32	32	32	32	32	32	31	32	0	0	32	0	0	32	0	0
		3:12	14.0	Non-Exposed	31	31	31	31	31	31	31	31	31	31	31	31	31	31	31	31	31	31	31	31	31	31	31	31	31	31	31	31	31	31	31	31	31	31	31	31	31	31	31	31	31	31
				Exposed	31	31	31	31	31	31	31	31	31	31	31	31	31	31	31	31	31	31	31	31	31	31	31	31	31	31	31	31	31	31	31	31	31	31	0	0	31	0	0	31	0	0
		4:12	18.4	Non-Exposed	31	31	31	31	31	31	31	31	31	31	31	31	31	31	31	31	31	31	31	31	31	31	31	31	31	31	31	31	31	31	31	31	31	31	31	31	31	31	31	31	31	31
				Exposed	31	31	31	31	31	31	31	31	31	31	31	31	31	31	31	31	31	31	31	31	31	31	31	31	31	31	31	31	31	31	31	31	31	31	0	0	31	0	0	31	0	0
		5:12	22.6	Non-Exposed	32	32		32	32		32	32		32	32		32	32		32	32		32	32		32	32		32	32		32	32		32	32		32	32		32	32		32	32	
				Exposed	32	32		32	32		32	32		32	32		32	32		32	32		32	32		32	32		32	32		32	32		32	32		32	32		32	32		32	32	
		6:12	26.6	Non-Exposed	33	33		33	33		33	33		33	33		33	33		33	33		33	33		33	33		33	33		33	33		33	33		33	33		33	33		33	33	
				Exposed	33	33		33	33		33	33		33	33		33	33		33	33		33	33		33	33		33	33		33	33		33	33		33	33		33	33		33	32	
		7:12	30.3	Non-Exposed	34	34	34	34	34	34	34	34	34	34	34	34	34	34	34	34	34	34	34	34	34	34	34	34	34	34	34	34	34	34	34	34	34	34	34	34	34	34	34	34	34	32
				Exposed	34	34	34	34	34	34	34	34	34	34	34	34	34	34	34	34	34	34	34	34	34	34	34	34	34	34	34	34	34	34	34	33	31	34	31	0	34	0	0	34	0	0
		8:12	33.7	Non-Exposed	35	35	35	35	35	35	35	35	35	35	35	35	35	35	35	35	35	35	35	35	35	35	35	35	35	35	35	35	35	35	35	35	35	35	35	35	35	35	34	35	34	32
				Exposed	35	35	35	35	35	35	35	35	35	35	35	35	35	35	35	35	35	35	35	35	35	35	35	35	35	35	35	35	34	35	33	31	35	31	0	35	0	0	35	0	0
		9:12	36.9	Non-Exposed	37	37	37	37	37	37	37	37	37	37	37	37	37	37	37	37	37	37	37	37	37	37	37	37	37	37	37	37	37	37	37	37	37	37	37	37	37	37	34	37	34	32
				Exposed	37	37	37	37	37	37	37	37	37	37	37	37	37	37	37	37	37	37	37	37	37	37	37	37	37	37	37	37	36	34	37	33	31	37	31	0	37	0	0	37	0	0
		10:12	39.8	Non-Exposed	39	39	39	39	39	39	39	39	39	39	39	39	39	39	39	39	39	39	39	39	39	39	39	39	39	39	39	39	39	39	39	39	39	39	39	37	39	37	34	38	34	32
				Exposed	39	39	39	39	39	39	39	39	39	39	39	39	39	39	39	39	39	39	39	39	39	39	39	39	39	39	37	39	36	34	39	33	31	39	31	0	39	0	0	37	0	0
		11:12	42.5	Non-Exposed	41	41	41	41	41	41	41	41	41	41	41	41	41	41	41	41	41	41	41	41	41	41	41	41	41	41	41	41	41	40	41	39	37	41	36	34	40	34	32	40	34	32
				Exposed	41	41	41	41	41	41	41	41	41	41	41	41	41	41	41	41	41	41	41	41	41	41	41	41	41	39	37	41	36	33	41	33	31	41	31	0	39	0	0	37	0	0
		12:12	45	Non-Exposed	44	44	44	44	44	44	44	44	44	44	44	44	44	44	44	44	44	44	44	44	44	44	44	44	44	44	44	44	44	42	40	43	39	37	42	36	34	42	34	32	42	34	32
				Exposed	44	44	44	44	44	44	44	44	44	44	44	44	44	44	44	44	44	44	44	44	43	44	43	41	44	39	37	44	35	33	44	33	31	42	31	0	39	0	0	37	0	0

Tamarack 2.3 Rail – Hip Flush-Mount on 30 Foot Maximum Mean Roof Height – Portrait – Panel Length = 80 Inches or Less

Ground Snow Load	Exposure Category	Roof Pitch	Roof Angle	Wind Speed (mph)	95			100			105			110			115			120			125			130			140			150			160			170			180			190		
				Roof Area	1	2	3	1	2	3	1	2	3	1	2	3	1	2	3	1	2	3	1	2	3	1	2	3	1	2	3	1	2	3	1	2	3	1	2	3	1	2	3	1	2	3
90	B	2:12	9.5	Non-Exposed	30	30	30	30	30	30	30	30	30	30	30	30	30	30	30	30	30	30	30	30	30	30	30	30	30	30	30	30	30	30	30	30	30	30	30	30	30	30	30	30	30	30
				Exposed	30	30	30	30	30	30	30	30	30	30	30	30	30	30	30	30	30	30	30	30	30	30	30	30	30	30	30	30	30	30	30	30	30	30	30	30	30	30	30	30	30	30
		3:12	14.0	Non-Exposed	29	29	29	29	29	29	29	29	29	29	29	29	29	29	29	29	29	29	29	29	29	29	29	29	29	29	29	29	29	29	29	29	29	29	29	29	29	29	29	29	29	29
				Exposed	29	29	29	29	29	29	29	29	29	29	29	29	29	29	29	29	29	29	29	29	29	29	29	29	29	29	29	29	29	29	29	29	29	29	29	29	29	29	29	29	29	29
		4:12	18.4	Non-Exposed	29	29	29	29	29	29	29	29	29	29	29	29	29	29	29	29	29	29	29	29	29	29	29	29	29	29	29	29	29	29	29	29	29	29	29	29	29	29	29	29	29	29
				Exposed	29	29	29	29	29	29	29	29	29	29	29	29	29	29	29	29	29	29	29	29	29	29	29	29	29	29	29	29	29	29	29	29	29	29	29	29	29	29	29	29	29	29
		5:12	22.6	Non-Exposed	30	30		30	30		30	30		30	30		30	30		30	30		30	30		30	30		30	30		30	30		30	30		30	30		30	30		30	30	
				Exposed	30	30		30	30		30	30		30	30		30	30		30	30		30	30		30	30		30	30		30	30		30	30		30	30		30	30		30	30	
		6:12	26.6	Non-Exposed	31	31		31	31		31	31		31	31		31	31		31	31		31	31		31	31		31	31		31	31		31	31		31	31		31	31		31	31	
				Exposed	31	31		31	31		31	31		31	31		31	31		31	31		31	31		31	31		31	31		31	31		31	31		31	31		31	31		31	31	
		7:12	30.3	Non-Exposed	32	32	32	32	32	32	32	32	32	32	32	32	32	32	32	32	32	32	32	32	32	32	32	32	32	32	32	32	32	32	32	32	32	32	32	32	32	32	32	32	32	32
				Exposed	32	32	32	32	32	32	32	32	32	32	32	32	32	32	32	32	32	32	32	32	32	32	32	32	32	32	32	32	32	32	32	32	32	32	32	32	32	32	32	32	32	32
		8:12	33.7	Non-Exposed	33	33	33	33	33	33	33	33	33	33	33	33	33	33	33	33	33	33	33	33	33	33	33	33	33	33	33	33	33	33	33	33	33	33	33	33	33	33	33	33	33	33
				Exposed	33	33	33	33	33	33	33	33	33	33	33	33	33	33	33	33	33	33	33	33	33	33	33	33	33	33	33	33	33	33	33	33	33	33	33	33	33	33	33	33	33	33
		9:12	36.9	Non-Exposed	35	35	35	35	35	35	35	35	35	35	35	35	35	35	35	35	35	35	35	35	35	35	35	35	35	35	35	35	35	35	35	35	35	35	35	35	35	35	35	35	35	35
				Exposed	35	35	35	35	35	35	35	35	35	35	35	35	35	35	35	35	35	35	35	35	35	35	35	35	35	35	35	35	35	35	35	35	35	35	35	35	35	35	35	35	35	34
		10:12	39.8	Non-Exposed	37	37	37	37	37	37	37	37	37	37	37	37	37	37	37	37	37	37	37	37	37	37	37	37	37	37	37	37	37	37	37	37	37	37	37	37	37	37	37	37	37	37
				Exposed	37	37	37	37	37	37	37	37	37	37	37	37	37	37	37	37	37	37	37	37	37	37	37	37	37	37	37	37	37	37	37	37	37	37	37	37	37	37	37	37	36	34
		11:12	42.5	Non-Exposed	39	39	39	39	39	39	39	39	39	39	39	39	39	39	39	39	39	39	39	39	39	39	39	39	39	39	39	39	39	39	39	39	39	39	39	39	39	39	39	39	39	39
				Exposed	39	39	39	39	39	39	39	39	39	39	39	39	39	39	39	39	39	39	39	39	39	39	39	39	39	39	39	39	39	39	39	39	37	39	36	34	39	36	34	39	36	34
		12:12	45	Non-Exposed	41	41	41	41	41	41	41	41	41	41	41	41	41	41	41	41	41	41	41	41	41	41	41	41	41	41	41	41	41	41	41	41	41	41	41	41	41	41	41	41	41	41
				Exposed	41	41	41	41	41	41	41	41	41	41	41	41	41	41	41	41	41	41	41	41	41	41	41	41	41	41	41	41	41	41	41	41	41	41	41	41	41	41	41	41	36	34
	C	2:12	9.5	Non-Exposed	30	30	30	30	30	30	30	30	30	30	30	30	30	30	30	30	30	30	30	30	30	30	30	30	30	30	30	30	30	30	30	30	30	30	30	30	30	30	30	30	30	30
				Exposed	30	30	30	30	30	30	30	30	30	30	30	30	30	30	30	30	30	30	30	30	30	30	30	30	30	30	30	30	30	30	30	30	30	30	30	30	30	30	30	30	30	0
		3:12	14.0	Non-Exposed	29	29	29	29	29	29	29	29	29	29	29	29	29	29	29	29	29	29	29	29	29	29	29	29	29	29	29	29	29	29	29	29	29	29	29	29	29	29	29	29	29	29
				Exposed	29	29	29	29	29	29	29	29	29	29	29	29	29	29	29	29	29	29	29	29	29	29	29	29	29	29	29	29	29	29	29	29	29	29	29	29	29	29	29	29	29	0
		4:12	18.4	Non-Exposed	29	29	29	29	29	29	29	29	29	29	29	29	29	29	29	29	29	29	29	29	29	29	29	29	29	29	29	29	29	29	29	29	29	29	29	29	29	29	29	29	29	29
				Exposed	29	29	29	29	29	29	29	29	29	29	29	29	29	29	29	29	29	29	29	29	29	29	29	29	29	29	29	29	29	29	29	29	29	29	29	29	29	29	29	29	29	0
		5:12	22.6	Non-Exposed	30	30		30	30		30	30		30	30		30	30		30	30		30	30		30	30		30	30		30	30		30	30		30	30		30	30		30	30	
				Exposed	30	30		30	30		30	30		30	30		30	30		30	30		30	30		30	30		30	30		30	30		30	30		30	30		30	30		30	30	
		6:12	26.6	Non-Exposed	31	31		31	31		31	31		31	31		31	31		31	31		31	31		31	31		31	31		31	31		31	31		31	31		31	31		31	31	
				Exposed	31	31		31	31		31	31		31	31		31	31		31	31		31	31		31	31		31	31		31	31		31	31		31	31		31	31		31	31	
		7:12	30.3	Non-Exposed	32	32	32	32	32	32	32	32	32	32	32	32	32	32	32	32	32	32	32	32	32	32	32	32	32	32	32	32	32	32	32	32	32	32	32	32	32	32	32	32	32	32
				Exposed	32	32	32	32	32	32	32	32	32	32	32	32	32	32	32	32	32	32	32	32	32	32	32	32	32	32	32	32	32	32	32	32	32	32	32	0	32	0	0	32	0	0
		8:12	33.7	Non-Exposed	33	33	33	33	33	33	33	33	33	33	33	33	33	33	33	33	33	33	33	33	33	33	33	33	33	33	33	33	33	33	33	33	33	33	33	33	33	33	33	33	33	33
				Exposed	33	33	33	33	33	33	33	33	33	33	33	33	33	33	33	33	33	33	33	33	33	33	33	33	33	33	33	33	33	32	33	32	0	33	0	0	33	0	0	33	0	0
		9:12	36.9	Non-Exposed	35	35	35	35	35	35	35	35	35	35	35	35	35	35	35	35	35	35	35	35	35	35	35	35	35	35	35	35	35	35	35	35	35	35	35	35	35	35	35	35	35	35
				Exposed	35	35	35	35	35	35	35	35	35	35	35	35	35	35	35	35	35	35	35	35	35	35	35	35	35	35	35	35	35	34	35	34	32	35	32	0	35	0	0	35	0	0
		10:12	39.8	Non-Exposed	37	37	37	37	37	37	37	37	37	37	37	37	37	37	37	37	37	37	37	37	37	37	37	37	37	37	37	37	37	37	37	37	37	37	37	37	37	37	37	37	37	36
				Exposed	37	37	37	37	37	37	37	37	37	37	37	37	37	37	37	37	37	37	37	37	37	37	37	37	37	37	37	37	37	36	37	34	32	37	32	0	37	0	0	37	0	0
		11:12	42.5	Non-Exposed	39	39	39	39	39	39	39	39	39	39	39	39	39	39	39	39	39	39	39	39	39	39	39	39	39	39	39	39	39	39	39	39	39	39	39	39	39	39	39	39	38	36
				Exposed	39	39	39	39	39	39	39	39	39	39	39	39	39	39	39	39	39	39	39	39	39	39	39	39	39	39	39	39	39	36	39	34	32	39	32	0	39	0	0	39	0	0
		12:12	45	Non-Exposed	41	41	41	41	41	41	41	41	41	41	41	41	41	41	41	41	41	41	41	41	41	41	41	41	41	41	41	41	41	41	41	41	41	41	41	41	41	41	41	41	38	36
				Exposed	41	41	41	41	41	41	41	41	41	41	41	41	41	41	41	41	41	41	41	41	41	41	41	41	41	41	40	37	41	36	34	41	34	32	41	32	0	41	0	0
	D	2:12	9.5	Non-Exposed	30	30	30	30	30	30	30	30	30	30	30	30	30	30	30	30	30	30	30	30	30	30	30	30	30	30	30	30	30	30	30	30	30	30	30	30	30	30	30	30	30	30
				Exposed	30	30	30	30	30	30	30	30	30	30	30	30	30	30	30	30	30	30	30	30	30	30	30	30	30	30	30	30	30	30	30	30	30	30	0	0	30	0	0	30	0	0
		3:12	14.0	Non-Exposed	29	29	29	29	29	29	29	29	29	29	29	29	29	29	29	29	29	29	29	29	29	29	29	29	29	29	29	29	29	29	29	29	29	29	29	29	29	29	29	29	29	29
				Exposed	29	29	29	29	29	29	29	29	29	29	29	29	29	29	29	29	29	29	29	29	29	29	29	29	29	29	29	29	29	29	29	29	29	29	0	0	29	0	0	29	0	0
		4:12	18.4	Non-Exposed	29	29	29	29	29	29	29	29	29	29	29	29	29	29	29	29	29	29	29	29	29	29	29	29	29	29	29	29	29	29	29	29	29	29	29	29	29	29	29	29	29	29
				Exposed	29	29	29	29	29	29	29	29	29	29	29	29	29	29	29	29	29	29	29	29	29	29	29	29	29	29	29	29	29	29	29	29	0	29	0	0	29	0	0	29	0	0
		5:12	22.6	Non-Exposed	30	30		30	30		30	30		30	30		30	30		30	30		30	30		30	30		30	30		30	30		30	30		30	30		30	30		30	30	
				Exposed	30	30		30	30		30	30		30	30		30	30		30	30		30	30		30	30		30	30		30	30		30	30		30	30		30	30		30	30	
		6:12	26.6	Non-Exposed	31	31		31	31		31	31		31	31		31	31		31	31		31	31		31	31		31	31		31	31		31	31		31	31		31	31		31	31	
				Exposed	31	31		31	31		31	31		31	31		31	31		31	31		31	31		31	31		31	31		31	31		31	31		31	31		31	31		31	31	
		7:12	30.3	Non-Exposed	32	32	32	32	32	32	32	32	32	32	32	32	32	32	32	32	32	32	32	32	32	32	32	32	32	32	32	32	32	32	32	32	32	32	32	32	32	32	32	32	32	32
				Exposed	32	32	32	32	32	32	32	32	32	32	32	32	32	32	32	32	32	32	32	32	32	32	32	32	32	32	32	32	32	31	32	31	0	32	0	0	32	0	0	32	0	0
		8:12	33.7	Non-Exposed	33	33	33	33	33	33	33	33	33	33	33	33	33	33	33	33	33	33	33	33	33	33	33	33	33	33	33	33	33	33	33	33	33	33	33	33	33	33	33	33	33	32
				Exposed	33	33	33	33	33	33	33	33	33	33	33	33	33	33	33	33	33	33	33	33	33	33	33	33	33	33	33	33	33	31	33	31	0	33	0	0	33	0	0	33	0	0
		9:12	36.9	Non-Exposed	35	35	35	35	35	35	35	35	35	35	35	35	35	35	35	35	35	35	35	35	35	35	35	35	35	35	35	35	35	35	35	35	35	35	35	35	35	35	34	35	34	32
				Exposed	35	35	35	35	35	35	35	35	35	35	35	35	35	35	35	35	35	35	35	35	35	35	35	35	35	35	35	34	35	33	31	35	31	0	35	0	0	35	0	0	35	0
		10:12	39.8	Non-Exposed	37	37	37	37	37	37	37	37	37	37	37	37	37	37	37	37	37	37	37	37	37	37	37	37	37	37	37	37	37	37	37	37	37	37	37	37	37	37	34	37	34	32
				Exposed	37	37	37	37	37	37	37	37	37	37	37	37	37	37	37	37	37	37	37	37	37	37	37	37	37	37	36	34	37	33	31	37	31	0	37	0	0	37	0	0	37	0
		11:12	42.5	Non-Exposed	39	39	39	39	39	39	39	39	39	39	39	39	39	39	39	39	39	39	39	39	39	39	39	39	39	39	39	39	39	39	39	39	39	39	39	37	39	36	34	38	34	32
				Exposed	39	39	39	39	39	39	39	39	39	39	39	39	39	39	39	39	39	39	39	39	39	39	39	39	39	39	37	39	36	33	39	33	31	39	31	0	39	0	0	37	0	0
		12:12	45	Non-Exposed	41	41	41	41	41	41	41	41	41	41	41	41	41	41	41	41	41	41	41	41	41	41	41	41	41	41	41	41	41	41	40	41	39	37	41	36	34	40	34	32
				Exposed	41	41	41	41	41	41	41	41	41	41	41	41	41	41	41	41	41	41	41	41	41	41	41	41	39	37	41	35	33	41	33	31	41	31	0	39	0	0	37	0	0

Tamarack 2.3 Rail – Hip Flush-Mount on 30 Foot Maximum Mean Roof Height – Portrait – Panel Length = 80 Inches or Less

Ground Snow Load	Exposure Category	Roof Pitch	Roof Angle	Wind Speed (mph)	95			100			105			110			115			120			125			130			140			150			160			170			180			190		
				Roof Area	1	2	3	1	2	3	1	2	3	1	2	3	1	2	3	1	2	3	1	2	3	1	2	3	1	2	3	1	2	3	1	2	3	1	2	3	1	2	3	1	2	3
100	B	2:12	9.5	Non-Exposed	29	29	29	29	29	29	29	29	29	29	29	29	29	29	29	29	29	29	29	29	29	29	29	29	29	29	29	29	29	29	29	29	29	29	29	29	29	29	29	29	29	29
				Exposed	29	29	29	29	29	29	29	29	29	29	29	29	29	29	29	29	29	29	29	29	29	29	29	29	29	29	29	29	29	29	29	29	29	29	29	29	29	29	29	29	29	29
		3:12	14.0	Non-Exposed	28	28	28	28	28	28	28	28	28	28	28	28	28	28	28	28	28	28	28	28	28	28	28	28	28	28	28	28	28	28	28	28	28	28	28	28	28	28	28	28	28	28
				Exposed	28	28	28	28	28	28	28	28	28	28	28	28	28	28	28	28	28	28	28	28	28	28	28	28	28	28	28	28	28	28	28	28	28	28	28	28	28	28	28	28	28	28
		4:12	18.4	Non-Exposed	28	28	28	28	28	28	28	28	28	28	28	28	28	28	28	28	28	28	28	28	28	28	28	28	28	28	28	28	28	28	28	28	28	28	28	28	28	28	28	28	28	28
				Exposed	28	28	28	28	28	28	28	28	28	28	28	28	28	28	28	28	28	28	28	28	28	28	28	28	28	28	28	28	28	28	28	28	28	28	28	28	28	28	28	28	28	28
		5:12	22.6	Non-Exposed	28	28		28	28		28	28		28	28		28	28		28	28		28	28		28	28		28	28		28	28		28	28		28	28		28	28		28	28	
				Exposed	28	28		28	28		28	28		28	28		28	28		28	28		28	28		28	28		28	28		28	28		28	28		28	28		28	28		28	28	
		6:12	26.6	Non-Exposed	29	29		29	29		29	29		29	29		29	29		29	29		29	29		29	29		29	29		29	29		29	29		29	29		29	29		29	29	
				Exposed	29	29		29	29		29	29		29	29		29	29		29	29		29	29		29	29		29	29		29	29		29	29		29	29		29	29		29	29	
		7:12	30.3	Non-Exposed	30	30	30	30	30	30	30	30	30	30	30	30	30	30	30	30	30	30	30	30	30	30	30	30	30	30	30	30	30	30	30	30	30	30	30	30	30	30	30	30	30	30
				Exposed	30	30	30	30	30	30	30	30	30	30	30	30	30	30	30	30	30	30	30	30	30	30	30	30	30	30	30	30	30	30	30	30	30	30	30	30	30	30	30	30	30	30
		8:12	33.7	Non-Exposed	32	32	32	32	32	32	32	32	32	32	32	32	32	32	32	32	32	32	32	32	32	32	32	32	32	32	32	32	32	32	32	32	32	32	32	32	32	32	32	32	32	32
				Exposed	32	32	32	32	32	32	32	32	32	32	32	32	32	32	32	32	32	32	32	32	32	32	32	32	32	32	32	32	32	32	32	32	32	32	32	32	32	32	32	32	32	32
		9:12	36.9	Non-Exposed	33	33	33	33	33	33	33	33	33	33	33	33	33	33	33	33	33	33	33	33	33	33	33	33	33	33	33	33	33	33	33	33	33	33	33	33	33	33	33	33	33	33
				Exposed	33	33	33	33	33	33	33	33	33	33	33	33	33	33	33	33	33	33	33	33	33	33	33	33	33	33	33	33	33	33	33	33	33	33	33	33	33	33	33	33	33	33
		10:12	39.8	Non-Exposed	35	35	35	35	35	35	35	35	35	35	35	35	35	35	35	35	35	35	35	35	35	35	35	35	35	35	35	35	35	35	35	35	35	35	35	35	35	35	35	35	35	35
				Exposed	35	35	35	35	35	35	35	35	35	35	35	35	35	35	35	35	35	35	35	35	35	35	35	35	35	35	35	35	35	35	35	35	34	35	34	32	35	32	0	35	0	0
		11:12	42.5	Non-Exposed	37	37	37	37	37	37	37	37	37	37	37	37	37	37	37	37	37	37	37	37	37	37	37	37	37	37	37	37	37	37	37	37	37	37	37	37	37	37	37	37	37	36
				Exposed	37	37	37	37	37	37	37	37	37	37	37	37	37	37	37	37	37	37	37	37	37	37	37	37	37	37	37	37	37	37	37	36	34	37	34	32	37	32	0	37	0	0
		12:12	45	Non-Exposed	39	39	39	39	39	39	39	39	39	39	39	39	39	39	39	39	39	39	39	39	39	39	39	39	39	39	39	39	39	39	39	39	39	39	39	39	39	39	38	39	38	36
				Exposed	39	39	39	39	39	39	39	39	39	39	39	39	39	39	39	39	39	39	39	39	39	39	39	39	39	39	39	39	39	37	39	36	34	39	34	32	39	32	0	39	0	0
	C	2:12	9.5	Non-Exposed	29	29	29	29	29	29	29	29	29	29	29	29	29	29	29	29	29	29	29	29	29	29	29	29	29	29	29	29	29	29	29	29	29	29	29	29	29	29	29	29	29	29
				Exposed	29	29	29	29	29	29	29	29	29	29	29	29	29	29	29	29	29	29	29	29	29	29	29	29	29	29	29	29	29	29	29	29	29	29	29	29	29	29	29	29	29	0
		3:12	14.0	Non-Exposed	28	28	28	28	28	28	28	28	28	28	28	28	28	28	28	28	28	28	28	28	28	28	28	28	28	28	28	28	28	28	28	28	28	28	28	28	28	28	28	28	28	28
				Exposed	28	28	28	28	28	28	28	28	28	28	28	28	28	28	28	28	28	28	28	28	28	28	28	28	28	28	28	28	28	28	28	28	28	28	28	28	28	28	28	28	28	0
		4:12	18.4	Non-Exposed	28	28	28	28	28	28	28	28	28	28	28	28	28	28	28	28	28	28	28	28	28	28	28	28	28	28	28	28	28	28	28	28	28	28	28	28	28	28	28	28	28	28
				Exposed	28	28	28	28	28	28	28	28	28	28	28	28	28	28	28	28	28	28	28	28	28	28	28	28	28	28	28	28	28	28	28	28	28	28	28	28	28	28	28	28	28	0
		5:12	22.6	Non-Exposed	28	28		28	28		28	28		28	28		28	28		28	28		28	28		28	28		28	28		28	28		28	28		28	28		28	28		28	28	
				Exposed	28	28		28	28		28	28		28	28		28	28		28	28		28	28		28	28		28	28		28	28		28	28		28	28		28	28		28	28	
		6:12	26.6	Non-Exposed	29	29		29	29		29	29		29	29		29	29		29	29		29	29		29	29		29	29		29	29		29	29		29	29		29	29		29	29	
				Exposed	29	29		29	29		29	29		29	29		29	29		29	29		29	29		29	29		29	29		29	29		29	29		29	29		29	29		29	29	
		7:12	30.3	Non-Exposed	30	30	30	30	30	30	30	30	30	30	30	30	30	30	30	30	30	30	30	30	30	30	30	30	30	30	30	30	30	30	30	30	30	30	30	30	30	30	30	30	30	30
				Exposed	30	30	30	30	30	30	30	30	30	30	30	30	30	30	30	30	30	30	30	30	30	30	30	30	30	30	30	30	30	30	30	30	30	30	30	30	30	30	0	30	0	0
		8:12	33.7	Non-Exposed	32	32	32	32	32	32	32	32	32	32	32	32	32	32	32	32	32	32	32	32	32	32	32	32	32	32	32	32	32	32	32	32	32	32	32	32	32	32	32	32	32	32
				Exposed	32	32	32	32	32	32	32	32	32	32	32	32	32	32	32	32	32	32	32	32	32	32	32	32	32	32	32	32	32	32	32	32	32	32	32	32	32	32	0	32	0	0
		9:12	36.9	Non-Exposed	33	33	33	33	33	33	33	33	33	33	33	33	33	33	33	33	33	33	33	33	33	33	33	33	33	33	33	33	33	33	33	33	33	33	33	33	33	33	33	33	33	33
				Exposed	33	33	33	33	33	33	33	33	33	33	33	33	33	33	33	33	33	33	33	33	33	33	33	33	33	33	33	33	33	33	33	33	33	33	33	32	33	32	0	33	0	0
		10:12	39.8	Non-Exposed	35	35	35	35	35	35	35	35	35	35	35	35	35	35	35	35	35	35	35	35	35	35	35	35	35	35	35	35	35	35	35	35	35	35	35	35	35	35	35	35	35	35
				Exposed	35	35	35	35	35	35	35	35	35	35	35	35	35	35	35	35	35	35	35	35	35	35	35	35	35	35	35	35	35	35	35	34	35	34	32	35	32	0	35	0	0	0
		11:12	42.5	Non-Exposed	37	37	37	37	37	37	37	37	37	37	37	37	37	37	37	37	37	37	37	37	37	37	37	37	37	37	37	37	37	37	37	37	37	37	37	37	37	37	37	37	37	36
				Exposed	37	37	37	37	37	37	37	37	37	37	37	37	37	37	37	37	37	37	37	37	37	37	37	37	37	37	37	37	37	37	37	36	34	37	34	32	37	32	0	37	0	0
		12:12	45	Non-Exposed	39	39	39	39	39	39	39	39	39	39	39	39	39	39	39	39	39	39	39	39	39	39	39	39	39	39	39	39	39	39	39	39	39	39	39	39	39	39	38	39	38	36
				Exposed	39	39	39	39	39	39	39	39	39	39	39	39	39	39	39	39	39	39	39	39	39	39	39	39	39	39	39	39	39	37	39	36	34	39	34	32	39	32	0	39	0	0
	D	2:12	9.5	Non-Exposed	29	29	29	29	29	29	29	29	29	29	29	29	29	29	29	29	29	29	29	29	29	29	29	29	29	29	29	29	29	29	29	29	29	29	29	29	29	29	29	29	29	29
				Exposed	29	29	29	29	29	29	29	29	29	29	29	29	29	29	29	29	29	29	29	29	29	29	29	29	29	29	29	29	29	29	29	29	29	29	29	29	29	29	0	0	29	0	0
		3:12	14.0	Non-Exposed	28	28	28	28	28	28	28	28	28	28	28	28	28	28	28	28	28	28	28	28	28	28	28	28	28	28	28	28	28	28	28	28	28	28	28	28	28	28	28	28	28	28
				Exposed	28	28	28	28	28	28	28	28	28	28	28	28	28	28	28	28	28	28	28	28	28	28	28	28	28	28	28	28	28	28	28	28	28	28	28	28	28	28	0	0	28	0	0
		4:12	18.4	Non-Exposed	28	28	28	28	28	28	28	28	28	28	28	28	28	28	28	28	28	28	28	28	28	28	28	28	28	28	28	28	28	28	28	28	28	28	28	28	28	28	28	28	28	28
				Exposed	28	28	28	28	28	28	28	28	28	28	28	28	28	28	28	28	28	28	28	28	28	28	28	28	28	28	28	28	28	28	28	28	28	28	28	0	28	0	0	28	0	0
		5:12	22.6	Non-Exposed	28	28		28	28		28	28		28	28		28	28		28	28		28	28		28	28		28	28		28	28		28	28		28	28		28	28		28	28	
				Exposed	28	28		28	28		28	28		28	28		28	28		28	28		28	28		28	28		28	28		28	28		28	28		28	28		28	28		28	28	
		6:12	26.6	Non-Exposed	29	29		29	29		29	29		29	29		29	29		29	29		29	29		29	29		29	29		29	29		29	29		29	29		29	29		29	29	
				Exposed	29	29		29	29		29	29		29	29		29	29		29	29		29	29		29	29		29	29		29	29		29	29		29	29		29	29		29	29	
		7:12	30.3	Non-Exposed	30	30	30	30	30	30	30	30	30	30	30	30	30	30	30	30	30	30	30	30	30	30	30	30	30	30	30	30	30	30	30	30	30	30	30	30	30	30	30	30	30	30
				Exposed	30	30	30	30	30	30	30	30	30	30	30	30	30	30	30	30	30	30	30	30	30	30	30	30	30	30	30	30	30	30	30	30	30	30	30	0	30	0	0	30	0	0
		8:12	33.7	Non-Exposed	32	32	32	32	32	32	32	32	32	32	32	32	32	32	32	32	32	32	32	32	32	32	32	32	32	32	32	32	32	32	32	32	32	32	32	32	32	32	32	32	32	32
				Exposed	32	32	32	32	32	32	32	32	32	32	32	32	32	32	32	32	32	32	32	32	32	32	32	32	32	32	32	32	32	32	32	31	32	31	0	32	0	0	32	0	0
		9:12	36.9	Non-Exposed	33	33	33	33	33	33	33	33	33	33	33	33	33	33	33	33	33	33	33	33	33	33	33	33	33	33	33	33	33	33	33	33	33	33	33	33	33	33	33	33	33	32
				Exposed	33	33	33	33	33	33	33	33	33	33	33	33	33	33	33	33	33	33	33	33	33	33	33	33	33	33	33	33	33	33	33	31	33	31	0	33	0	0	33	0	0
		10:12	39.8	Non-Exposed	35	35	35	35	35	35	35	35	35	35	35	35	35	35	35	35	35	35	35	35	35	35	35	35	35	35	35	35	35	35	35	35	35	35	35	35	35	35	34	35	34	32
				Exposed	35	35	35	35	35	35	35	35	35	35	35	35	35	35	35	35	35	35	35	35	35	35	35	35	35	35	35	35	35	34	35	33	31	35	31	0	35	0	0	35	0	0
		11:12	42.5	Non-Exposed	37	37	37	37	37	37	37	37	37	37	37	37	37	37	37	37	37	37	37	37	37	37	37	37	37	37	37	37	37	37	37	37	37	37	37	37	36	34	37	34	32
				Exposed	37	37	37	37	37	37	37	37	37	37	37	37	37	37	37	37	37	37	37	37	37	37	37	37	37	37	37	36	33	37	33	31	37	31	0	37	0	0	37	0	0
		12:12	45	Non-Exposed	39	39	39	39	39	39	39	39	39	39	39	39	39	39	39	39	39	39	39	39	39	39	39	39	39	39	39	39	39	39	39	39	39	39	39	37	39	34	39	34	32
				Exposed	39	39	39	39	39	39	39	39	39	39	39	39	39	39	39	39	39	39	39	39	39	39	39	39	39	39	39	35	33	39	33	31	39	31	0	39	0	0	37	0	0

Tamarack 2.3 Rail – Hip Flush-Mount on 30 Foot Maximum Mean Roof Height – Portrait – Panel Length = 80 Inches or Less

Ground Snow Load	Exposure Category	Roof Pitch	Roof Angle	Wind Speed (mph)	95			100			105			110			115			120			125			130			140			150			160			170			180			190		
				Roof Area	1	2	3	1	2	3	1	2	3	1	2	3	1	2	3	1	2	3	1	2	3	1	2	3	1	2	3	1	2	3	1	2	3	1	2	3	1	2	3	1	2	3
110	B	2:12	9.5	Non-Exposed	27	27	27	27	27	27	27	27	27	27	27	27	27	27	27	27	27	27	27	27	27	27	27	27	27	27	27	27	27	27	27	27	27	27	27	27	27	27	27	27	27	27
				Exposed	27	27	27	27	27	27	27	27	27	27	27	27	27	27	27	27	27	27	27	27	27	27	27	27	27	27	27	27	27	27	27	27	27	27	27	27	27	27	27	27	27	27
		3:12	14.0	Non-Exposed	26	26	26	26	26	26	26	26	26	26	26	26	26	26	26	26	26	26	26	26	26	26	26	26	26	26	26	26	26	26	26	26	26	26	26	26	26	26	26	26	26	26
				Exposed	26	26	26	26	26	26	26	26	26	26	26	26	26	26	26	26	26	26	26	26	26	26	26	26	26	26	26	26	26	26	26	26	26	26	26	26	26	26	26	26	26	26
		4:12	18.4	Non-Exposed	26	26	26	26	26	26	26	26	26	26	26	26	26	26	26	26	26	26	26	26	26	26	26	26	26	26	26	26	26	26	26	26	26	26	26	26	26	26	26	26	26	26
				Exposed	26	26	26	26	26	26	26	26	26	26	26	26	26	26	26	26	26	26	26	26	26	26	26	26	26	26	26	26	26	26	26	26	26	26	26	26	26	26	26	26	26	26
		5:12	22.6	Non-Exposed	27	27		27	27		27	27		27	27		27	27		27	27		27	27		27	27		27	27		27	27		27	27		27	27		27	27		27	27	
				Exposed	27	27		27	27		27	27		27	27		27	27		27	27		27	27		27	27		27	27		27	27		27	27		27	27		27	27		27	27	
		6:12	26.6	Non-Exposed	28	28		28	28		28	28		28	28		28	28		28	28		28	28		28	28		28	28		28	28		28	28		28	28		28	28		28	28	
				Exposed	28	28		28	28		28	28		28	28		28	28		28	28		28	28		28	28		28	28		28	28		28	28		28	28		28	28		28	28	
		7:12	30.3	Non-Exposed	29	29	29	29	29	29	29	29	29	29	29	29	29	29	29	29	29	29	29	29	29	29	29	29	29	29	29	29	29	29	29	29	29	29	29	29	29	29	29	29	29	29
				Exposed	29	29	29	29	29	29	29	29	29	29	29	29	29	29	29	29	29	29	29	29	29	29	29	29	29	29	29	29	29	29	29	29	29	29	29	29	29	29	29	29	29	29
		8:12	33.7	Non-Exposed	30	30	30	30	30	30	30	30	30	30	30	30	30	30	30	30	30	30	30	30	30	30	30	30	30	30	30	30	30	30	30	30	30	30	30	30	30	30	30	30	30	30
				Exposed	30	30	30	30	30	30	30	30	30	30	30	30	30	30	30	30	30	30	30	30	30	30	30	30	30	30	30	30	30	30	30	30	30	30	30	30	30	30	30	30	30	30
		9:12	36.9	Non-Exposed	32	32	32	32	32	32	32	32	32	32	32	32	32	32	32	32	32	32	32	32	32	32	32	32	32	32	32	32	32	32	32	32	32	32	32	32	32	32	32	32	32	32
				Exposed	32	32	32	32	32	32	32	32	32	32	32	32	32	32	32	32	32	32	32	32	32	32	32	32	32	32	32	32	32	32	32	32	32	32	32	32	32	32	32	32	32	32
		10:12	39.8	Non-Exposed	34	34	34	34	34	34	34	34	34	34	34	34	34	34	34	34	34	34	34	34	34	34	34	34	34	34	34	34	34	34	34	34	34	34	34	34	34	34	34	34	34	34
				Exposed	34	34	34	34	34	34	34	34	34	34	34	34	34	34	34	34	34	34	34	34	34	34	34	34	34	34	34	34	34	34	34	34	34	34	34	34	34	34	34	34	34	34
		11:12	42.5	Non-Exposed	35	35	35	35	35	35	35	35	35	35	35	35	35	35	35	35	35	35	35	35	35	35	35	35	35	35	35	35	35	35	35	35	35	35	35	35	35	35	35	35	35	35
				Exposed	35	35	35	35	35	35	35	35	35	35	35	35	35	35	35	35	35	35	35	35	35	35	35	35	35	35	35	35	35	35	35	35	34	35	34	32	35	32	0	35	0	0
		12:12	45	Non-Exposed	38	38	38	38	38	38	38	38	38	38	38	38	38	38	38	38	38	38	38	38	38	38	38	38	38	38	38	38	38	38	38	38	38	38	38	38	38	38	38	38	38	34
				Exposed	38	38	38	38	38	38	38	38	38	38	38	38	38	38	38	38	38	38	38	38	38	38	38	38	38	38	38	38	38	38	38	36	34	38	34	32	38	32	0	38	0	0
	C	2:12	9.5	Non-Exposed	27	27	27	27	27	27	27	27	27	27	27	27	27	27	27	27	27	27	27	27	27	27	27	27	27	27	27	27	27	27	27	27	27	27	27	27	27	27	27	27	27	27
				Exposed	27	27	27	27	27	27	27	27	27	27	27	27	27	27	27	27	27	27	27	27	27	27	27	27	27	27	27	27	27	27	27	27	27	27	27	27	27	27	27	27	27	0
		3:12	14.0	Non-Exposed	26	26	26	26	26	26	26	26	26	26	26	26	26	26	26	26	26	26	26	26	26	26	26	26	26	26	26	26	26	26	26	26	26	26	26	26	26	26	26	26	26	26
				Exposed	26	26	26	26	26	26	26	26	26	26	26	26	26	26	26	26	26	26	26	26	26	26	26	26	26	26	26	26	26	26	26	26	26	26	26	26	26	26	26	26	26	0
		4:12	18.4	Non-Exposed	26	26	26	26	26	26	26	26	26	26	26	26	26	26	26	26	26	26	26	26	26	26	26	26	26	26	26	26	26	26	26	26	26	26	26	26	26	26	26	26	26	26
				Exposed	26	26	26	26	26	26	26	26	26	26	26	26	26	26	26	26	26	26	26	26	26	26	26	26	26	26	26	26	26	26	26	26	26	26	26	26	26	26	26	26	26	0
		5:12	22.6	Non-Exposed	27	27		27	27		27	27		27	27		27	27		27	27		27	27		27	27		27	27		27	27		27	27		27	27		27	27		27	27	
				Exposed	27	27		27	27		27	27		27	27		27	27		27	27		27	27		27	27		27	27		27	27		27	27		27	27		27	27		27	27	
		6:12	26.6	Non-Exposed	28	28		28	28		28	28		28	28		28	28		28	28		28	28		28	28		28	28		28	28		28	28		28	28		28	28		28	28	
				Exposed	28	28		28	28		28	28		28	28		28	28		28	28		28	28		28	28		28	28		28	28		28	28		28	28		28	28		28	28	
		7:12	30.3	Non-Exposed	29	29	29	29	29	29	29	29	29	29	29	29	29	29	29	29	29	29	29	29	29	29	29	29	29	29	29	29	29	29	29	29	29	29	29	29	29	29	29	29	29	29
				Exposed	29	29	29	29	29	29	29	29	29	29	29	29	29	29	29	29	29	29	29	29	29	29	29	29	29	29	29	29	29	29	29	29	29	29	29	29	29	29	0	29	0	0
		8:12	33.7	Non-Exposed	30	30	30	30	30	30	30	30	30	30	30	30	30	30	30	30	30	30	30	30	30	30	30	30	30	30	30	30	30	30	30	30	30	30	30	30	30	30	30	30	30	30
				Exposed	30	30	30	30	30	30	30	30	30	30	30	30	30	30	30	30	30	30	30	30	30	30	30	30	30	30	30	30	30	30	30	30	30	30	30	30	30	30	0	30	0	0
		9:12	36.9	Non-Exposed	32	32	32	32	32	32	32	32	32	32	32	32	32	32	32	32	32	32	32	32	32	32	32	32	32	32	32	32	32	32	32	32	32	32	32	32	32	32	32	32	32	32
				Exposed	32	32	32	32	32	32	32	32	32	32	32	32	32	32	32	32	32	32	32	32	32	32	32	32	32	32	32	32	32	32	32	32	32	32	32	32	32	32	0	32	0	0
		10:12	39.8	Non-Exposed	34	34	34	34	34	34	34	34	34	34	34	34	34	34	34	34	34	34	34	34	34	34	34	34	34	34	34	34	34	34	34	34	34	34	34	34	34	34	34	34	34	34
				Exposed	34	34	34	34	34	34	34	34	34	34	34	34	34	34	34	34	34	34	34	34	34	34	34	34	34	34	34	34	34	34	34	34	34	34	34	32	34	32	0	34	0	0
		11:12	42.5	Non-Exposed	35	35	35	35	35	35	35	35	35	35	35	35	35	35	35	35	35	35	35	35	35	35	35	35	35	35	35	35	35	35	35	35	35	35	35	35	35	35	35	35	35	35
				Exposed	35	35	35	35	35	35	35	35	35	35	35	35	35	35	35	35	35	35	35	35	35	35	35	35	35	35	35	35	35	35	35	35	34	35	34	32	35	32	0	35	0	0
		12:12	45	Non-Exposed	38	38	38	38	38	38	38	38	38	38	38	38	38	38	38	38	38	38	38	38	38	38	38	38	38	38	38	38	38	38	38	38	38	38	38	38	38	38	38	38	38	36
				Exposed	38	38	38	38	38	38	38	38	38	38	38	38	38	38	38	38	38	38	38	38	38	38	38	38	38	38	37	38	36	34	38	34	32	38	32	0	38	0	0	38	0	0
	D	2:12	9.5	Non-Exposed	27	27	27	27	27	27	27	27	27	27	27	27	27	27	27	27	27	27	27	27	27	27	27	27	27	27	27	27	27	27	27	27	27	27	27	27	27	27	27	27	27	27
				Exposed	27	27	27	27	27	27	27	27	27	27	27	27	27	27	27	27	27	27	27	27	27	27	27	27	27	27	27	27	27	27	27	27	27	27	27	27	0	0	27	0	0
		3:12	14.0	Non-Exposed	26	26	26	26	26	26	26	26	26	26	26	26	26	26	26	26	26	26	26	26	26	26	26	26	26	26	26	26	26	26	26	26	26	26	26	26	26	26	26	26	26	26
				Exposed	26	26	26	26	26	26	26	26	26	26	26	26	26	26	26	26	26	26	26	26	26	26	26	26	26	26	26	26	26	26	26	26	26	26	26	26	0	0	26	0	0
		4:12	18.4	Non-Exposed	26	26	26	26	26	26	26	26	26	26	26	26	26	26	26	26	26	26	26	26	26	26	26	26	26	26	26	26	26	26	26	26	26	26	26	26	26	26	26	26	26	26
				Exposed	26	26	26	26	26	26	26	26	26	26	26	26	26	26	26	26	26	26	26	26	26	26	26	26	26	26	26	26	26	26	26	26	26	26	26	0	26	0	0	26	0	0
		5:12	22.6	Non-Exposed	27	27		27	27		27	27		27	27		27	27		27	27		27	27		27	27		27	27		27	27		27	27		27	27		27	27		27	27	
				Exposed	27	27		27	27		27	27		27	27		27	27		27	27		27	27		27	27		27	27		27	27		27	27		27	27		27	27		27	27	
		6:12	26.6	Non-Exposed	28	28		28	28		28	28		28	28		28	28		28	28		28	28		28	28		28	28		28	28		28	28		28	28		28	28		28	28	
				Exposed	28	28		28	28		28	28		28	28		28	28		28	28		28	28		28	28		28	28		28	28		28	28		28	28		28	28		28	28	
		7:12	30.3	Non-Exposed	29	29	29	29	29	29	29	29	29	29	29	29	29	29	29	29	29	29	29	29	29	29	29	29	29	29	29	29	29	29	29	29	29	29	29	29	29	29	29	29	29	29
				Exposed	29	29	29	29	29	29	29	29	29	29	29	29	29	29	29	29	29	29	29	29	29	29	29	29	29	29	29	29	29	29	29	29	29	29	29	0	29	0	0	29	0	0
		8:12	33.7	Non-Exposed	30	30	30	30	30	30	30	30	30	30	30	30	30	30	30	30	30	30	30	30	30	30	30	30	30	30	30	30	30	30	30	30	30	30	30	30	30	30	30	30	30	30
				Exposed	30	30	30	30	30	30	30	30	30	30	30	30	30	30	30	30	30	30	30	30	30	30	30	30	30	30	30	30	30	30	30	30	30	30	30	0	30	0	0	30	0	0
		9:12	36.9	Non-Exposed	32	32	32	32	32	32	32	32	32	32	32	32	32	32	32	32	32	32	32	32	32	32	32	32	32	32	32	32	32	32	32	32	32	32	32	32	32	32	32	32	32	32
				Exposed	32	32	32	32	32	32	32	32	32	32	32	32	32	32	32	32	32	32	32	32	32	32	32	32	32	32	32	32	32	31	32	31	0	32	0	0	32	0	0	32	0	0
		10:12	39.8	Non-Exposed	34	34	34	34	34	34	34	34	34	34	34	34	34	34	34	34	34	34	34	34	34	34	34	34	34	34	34	34	34	34	34	34	34	34	34	34	34	34	34	34	34	32
				Exposed	34	34	34	34	34	34	34	34	34	34	34	34	34	34	34	34	34	34	34	34	34	34	34	34	34	34	34	34	34	33	31	34	31	0	34	0	0	34	0	0	34	0	0
		11:12	42.5	Non-Exposed	35	35	35	35	35	35	35	35	35	35	35	35	35	35	35	35	35	35	35	35	35	35	35	35	35	35	35	35	35	35	35	35	35	35	35	34	35	34	32	35	34	32
				Exposed	35	35	35	35	35	35	35	35	35	35	35	35	35	35	35	35	35	35	35	35	35	35	35	35	35	35	35	33	35	33	31	35	31	0	35	0	0	35	0	0	35	0	0
		12:12	45	Non-Exposed	38	38	38	38	38	38	38	38	38	38	38	38	38	38	38	38	38	38	38	38	38	38	38	38	38	38	38	38	38	38	38	38	38	37	38	36	34	37	34	32	37	34	32
				Exposed	38	38	38	38	38	38	38	38	38	38	38	38	38	38	38	38	38	38	38	38	38	38	38	38	38	38	37	38	35	33	38	33	31	38	31	0	38	0	0	37	0	0

Tamarack 2.3 Rail – Hip Flush-Mount on 30 Foot Maximum Mean Roof Height – Portrait – Panel Length = 80 Inches or Less

Ground Snow Load	Exposure Category	Roof Pitch	Roof Angle	Wind Speed (mph)	95			100			105			110			115			120			125			130			140			150			160			170			180			190		
				Roof Area	1	2	3	1	2	3	1	2	3	1	2	3	1	2	3	1	2	3	1	2	3	1	2	3	1	2	3	1	2	3	1	2	3	1	2	3	1	2	3	1	2	3
120	B	2:12	9.5	Non-Exposed	26	26	26	26	26	26	26	26	26	26	26	26	26	26	26	26	26	26	26	26	26	26	26	26	26	26	26	26	26	26	26	26	26	26	26	26	26	26	26	26	26	26
				Exposed	26	26	26	26	26	26	26	26	26	26	26	26	26	26	26	26	26	26	26	26	26	26	26	26	26	26	26	26	26	26	26	26	26	26	26	26	26	26	26	26	26	26
		3:12	14.0	Non-Exposed	25	25	25	25	25	25	25	25	25	25	25	25	25	25	25	25	25	25	25	25	25	25	25	25	25	25	25	25	25	25	25	25	25	25	25	25	25	25	25	25	25	25
				Exposed	25	25	25	25	25	25	25	25	25	25	25	25	25	25	25	25	25	25	25	25	25	25	25	25	25	25	25	25	25	25	25	25	25	25	25	25	25	25	25	25	25	25
		4:12	18.4	Non-Exposed	25	25	25	25	25	25	25	25	25	25	25	25	25	25	25	25	25	25	25	25	25	25	25	25	25	25	25	25	25	25	25	25	25	25	25	25	25	25	25	25	25	25
				Exposed	25	25	25	25	25	25	25	25	25	25	25	25	25	25	25	25	25	25	25	25	25	25	25	25	25	25	25	25	25	25	25	25	25	25	25	25	25	25	25	25	25	25
		5:12	22.6	Non-Exposed	26	26		26	26		26	26		26	26		26	26		26	26		26	26		26	26		26	26		26	26		26	26		26	26		26	26		26	26	
				Exposed	26	26		26	26		26	26		26	26		26	26		26	26		26	26		26	26		26	26		26	26		26	26		26	26		26	26		26	26	
		6:12	26.6	Non-Exposed	26	26		26	26		26	26		26	26		26	26		26	26		26	26		26	26		26	26		26	26		26	26		26	26		26	26		26	26	
				Exposed	26	26		26	26		26	26		26	26		26	26		26	26		26	26		26	26		26	26		26	26		26	26		26	26		26	26		26	26	
		7:12	30.3	Non-Exposed	28	28	28	28	28	28	28	28	28	28	28	28	28	28	28	28	28	28	28	28	28	28	28	28	28	28	28	28	28	28	28	28	28	28	28	28	28	28	28	28	28	28
				Exposed	28	28	28	28	28	28	28	28	28	28	28	28	28	28	28	28	28	28	28	28	28	28	28	28	28	28	28	28	28	28	28	28	28	28	28	28	28	28	28	28	28	28
		8:12	33.7	Non-Exposed	29	29	29	29	29	29	29	29	29	29	29	29	29	29	29	29	29	29	29	29	29	29	29	29	29	29	29	29	29	29	29	29	29	29	29	29	29	29	29	29	29	29
				Exposed	29	29	29	29	29	29	29	29	29	29	29	29	29	29	29	29	29	29	29	29	29	29	29	29	29	29	29	29	29	29	29	29	29	29	29	29	29	29	29	29	29	29
		9:12	36.9	Non-Exposed	30	30	30	30	30	30	30	30	30	30	30	30	30	30	30	30	30	30	30	30	30	30	30	30	30	30	30	30	30	30	30	30	30	30	30	30	30	30	30	30	30	30
				Exposed	30	30	30	30	30	30	30	30	30	30	30	30	30	30	30	30	30	30	30	30	30	30	30	30	30	30	30	30	30	30	30	30	30	30	30	30	30	30	30	30	30	30
		10:12	39.8	Non-Exposed	32	32	32	32	32	32	32	32	32	32	32	32	32	32	32	32	32	32	32	32	32	32	32	32	32	32	32	32	32	32	32	32	32	32	32	32	32	32	32	32	32	32
				Exposed	32	32	32	32	32	32	32	32	32	32	32	32	32	32	32	32	32	32	32	32	32	32	32	32	32	32	32	32	32	32	32	32	32	32	32	32	32	32	32	32	32	32
		11:12	42.5	Non-Exposed	34	34	34	34	34	34	34	34	34	34	34	34	34	34	34	34	34	34	34	34	34	34	34	34	34	34	34	34	34	34	34	34	34	34	34	34	34	34	34	34	34	34
				Exposed	34	34	34	34	34	34	34	34	34	34	34	34	34	34	34	34	34	34	34	34	34	34	34	34	34	34	34	34	34	34	34	34	34	34	34	34	34	34	34	34	34	34
		12:12	45	Non-Exposed	36	36	36	36	36	36	36	36	36	36	36	36	36	36	36	36	36	36	36	36	36	36	36	36	36	36	36	36	36	36	36	36	36	36	36	36	36	36	36	36	36	36
				Exposed	36	36	36	36	36	36	36	36	36	36	36	36	36	36	36	36	36	36	36	36	36	36	36	36	36	36	36	36	36	36	36	36	34	36	34	32	36	32	0	36	0	0
	C	2:12	9.5	Non-Exposed	26	26	26	26	26	26	26	26	26	26	26	26	26	26	26	26	26	26	26	26	26	26	26	26	26	26	26	26	26	26	26	26	26	26	26	26	26	26	26	26	26	26
				Exposed	26	26	26	26	26	26	26	26	26	26	26	26	26	26	26	26	26	26	26	26	26	26	26	26	26	26	26	26	26	26	26	26	26	26	26	26	26	26	26	26	26	0
		3:12	14.0	Non-Exposed	25	25	25	25	25	25	25	25	25	25	25	25	25	25	25	25	25	25	25	25	25	25	25	25	25	25	25	25	25	25	25	25	25	25	25	25	25	25	25	25	25	25
				Exposed	25	25	25	25	25	25	25	25	25	25	25	25	25	25	25	25	25	25	25	25	25	25	25	25	25	25	25	25	25	25	25	25	25	25	25	25	25	25	25	25	25	0
		4:12	18.4	Non-Exposed	25	25	25	25	25	25	25	25	25	25	25	25	25	25	25	25	25	25	25	25	25	25	25	25	25	25	25	25	25	25	25	25	25	25	25	25	25	25	25	25	25	25
				Exposed	25	25	25	25	25	25	25	25	25	25	25	25	25	25	25	25	25	25	25	25	25	25	25	25	25	25	25	25	25	25	25	25	25	25	25	25	25	25	25	25	25	0
		5:12	22.6	Non-Exposed	26	26		26	26		26	26		26	26		26	26		26	26		26	26		26	26		26	26		26	26		26	26		26	26		26	26		26	26	
				Exposed	26	26		26	26		26	26		26	26		26	26		26	26		26	26		26	26		26	26		26	26		26	26		26	26		26	26		26	26	
		6:12	26.6	Non-Exposed	26	26		26	26		26	26		26	26		26	26		26	26		26	26		26	26		26	26		26	26		26	26		26	26		26	26		26	26	
				Exposed	26	26		26	26		26	26		26	26		26	26		26	26		26	26		26	26		26	26		26	26		26	26		26	26		26	26		26	26	
		7:12	30.3	Non-Exposed	28	28	28	28	28	28	28	28	28	28	28	28	28	28	28	28	28	28	28	28	28	28	28	28	28	28	28	28	28	28	28	28	28	28	28	28	28	28	28	28	28	28
				Exposed	28	28	28	28	28	28	28	28	28	28	28	28	28	28	28	28	28	28	28	28	28	28	28	28	28	28	28	28	28	28	28	28	28	28	28	28	28	28	28	0	28	0
		8:12	33.7	Non-Exposed	29	29	29	29	29	29	29	29	29	29	29	29	29	29	29	29	29	29	29	29	29	29	29	29	29	29	29	29	29	29	29	29	29	29	29	29	29	29	29	29	29	29
				Exposed	29	29	29	29	29	29	29	29	29	29	29	29	29	29	29	29	29	29	29	29	29	29	29	29	29	29	29	29	29	29	29	29	29	29	29	29	29	29	0	29	0	0
		9:12	36.9	Non-Exposed	30	30	30	30	30	30	30	30	30	30	30	30	30	30	30	30	30	30	30	30	30	30	30	30	30	30	30	30	30	30	30	30	30	30	30	30	30	30	30	30	30	30
				Exposed	30	30	30	30	30	30	30	30	30	30	30	30	30	30	30	30	30	30	30	30	30	30	30	30	30	30	30	30	30	30	30	30	30	30	30	30	30	30	0	30	0	0
		10:12	39.8	Non-Exposed	32	32	32	32	32	32	32	32	32	32	32	32	32	32	32	32	32	32	32	32	32	32	32	32	32	32	32	32	32	32	32	32	32	32	32	32	32	32	32	32	32	32
				Exposed	32	32	32	32	32	32	32	32	32	32	32	32	32	32	32	32	32	32	32	32	32	32	32	32	32	32	32	32	32	32	32	32	32	32	32	32	32	32	0	32	0	0
		11:12	42.5	Non-Exposed	34	34	34	34	34	34	34	34	34	34	34	34	34	34	34	34	34	34	34	34	34	34	34	34	34	34	34	34	34	34	34	34	34	34	34	34	34	34	34	34	34	34
				Exposed	34	34	34	34	34	34	34	34	34	34	34	34	34	34	34	34	34	34	34	34	34	34	34	34	34	34	34	34	34	34	34	34	34	34	34	32	34	32	0	34	0	0
		12:12	45	Non-Exposed	36	36	36	36	36	36	36	36	36	36	36	36	36	36	36	36	36	36	36	36	36	36	36	36	36	36	36	36	36	36	36	36	36	36	36	36	36	36	36	36	36	36
				Exposed	36	36	36	36	36	36	36	36	36	36	36	36	36	36	36	36	36	36	36	36	36	36	36	36	36	36	36	36	36	36	36	36	34	36	34	32	36	32	0	36	0	0
	D	2:12	9.5	Non-Exposed	26	26	26	26	26	26	26	26	26	26	26	26	26	26	26	26	26	26	26	26	26	26	26	26	26	26	26	26	26	26	26	26	26	26	26	26	26	26	26	26	26	26
				Exposed	26	26	26	26	26	26	26	26	26	26	26	26	26	26	26	26	26	26	26	26	26	26	26	26	26	26	26	26	26	26	26	26	26	26	26	26	26	0	0	26	0	0
		3:12	14.0	Non-Exposed	25	25	25	25	25	25	25	25	25	25	25	25	25	25	25	25	25	25	25	25	25	25	25	25	25	25	25	25	25	25	25	25	25	25	25	25	25	25	25	25	25	25
				Exposed	25	25	25	25	25	25	25	25	25	25	25	25	25	25	25	25	25	25	25	25	25	25	25	25	25	25	25	25	25	25	25	25	25	25	25	25	25	0	0	25	0	0
		4:12	18.4	Non-Exposed	25	25	25	25	25	25	25	25	25	25	25	25	25	25	25	25	25	25	25	25	25	25	25	25	25	25	25	25	25	25	25	25	25	25	25	25	25	25	25	25	25	25
				Exposed	25	25	25	25	25	25	25	25	25	25	25	25	25	25	25	25	25	25	25	25	25	25	25	25	25	25	25	25	25	25	25	25	25	25	25	25	25	0	0	25	0	0
		5:12	22.6	Non-Exposed	26	26		26	26		26	26		26	26		26	26		26	26		26	26		26	26		26	26		26	26		26	26		26	26		26	26		26	26	
				Exposed	26	26		26	26		26	26		26	26		26	26		26	26		26	26		26	26		26	26		26	26		26	26		26	26		26	26		26	26	
		6:12	26.6	Non-Exposed	26	26		26	26		26	26		26	26		26	26		26	26		26	26		26	26		26	26		26	26		26	26		26	26		26	26		26	26	
				Exposed	26	26		26	26		26	26		26	26		26	26		26	26		26	26		26	26		26	26		26	26		26	26		26	26		26	26		26	26	
		7:12	30.3	Non-Exposed	28	28	28	28	28	28	28	28	28	28	28	28	28	28	28	28	28	28	28	28	28	28	28	28	28	28	28	28	28	28	28	28	28	28	28	28	28	28	28	28	28	28
				Exposed	28	28	28	28	28	28	28	28	28	28	28	28	28	28	28	28	28	28	28	28	28	28	28	28	28	28	28	28	28	28	28	28	28	28	28	28	28	0	0	28	0	0
		8:12	33.7	Non-Exposed	29	29	29	29	29	29	29	29	29	29	29	29	29	29	29	29	29	29	29	29	29	29	29	29	29	29	29	29	29	29	29	29	29	29	29	29	29	29	29	29	29	29
				Exposed	29	29	29	29	29	29	29	29	29	29	29	29	29	29	29	29	29	29	29	29	29	29	29	29	29	29	29	29	29	29	29	29	29	29	29	29	29	0	0	29	0	0
		9:12	36.9	Non-Exposed	30	30	30	30	30	30	30	30	30	30	30	30	30	30	30	30	30	30	30	30	30	30	30	30	30	30	30	30	30	30	30	30	30	30	30	30	30	30	30	30	30	30
				Exposed	30	30	30	30	30	30	30	30	30	30	30	30	30	30	30	30	30	30	30	30	30	30	30	30	30	30	30	30	30	30	30	30	30	30	30	30	30	0	0	30	0	0
		10:12	39.8	Non-Exposed	32	32	32	32	32	32	32	32	32	32	32	32	32	32	32	32	32	32	32	32	32	32	32	32	32	32	32	32	32	32	32	32	32	32	32	32	32	32	32	32	32	32
				Exposed	32	32	32	32	32	32	32	32	32	32	32	32	32	32	32	32	32	32	32	32	32	32	32	32	32	32	32	32	32	31	32	31	0	32	0	0	32	0	0
		11:12	42.5	Non-Exposed	34	34	34	34	34	34	34	34	34	34	34	34	34	34	34	34	34	34	34	34	34	34	34	34	34	34	34	34	34	34	34	34	34	34	34	34	34	34	34	34	34	32
				Exposed	34	34	34	34	34	34	34	34	34	34	34	34	34	34	34	34	34	34	34	34	34	34	34	34	34	34	34	33	34	33	31	34	31	0	34	0	0	34	0	0
		12:12	45	Non-Exposed	36	36	36	36	36	36	36	36	36	36	36	36	36	36	36	36	36	36	36	36	36	36	36	36	36	36	36	36	36	36	36	36	36	36	36	36	36	36	34	36	34	32
				Exposed	36	36	36	36	36	36	36	36	36	36	36	36	36	36	36	36	36	36	36	36	36	36	36	36	36	36	35	33	36	33	31	36	31	0	36	0	0	36	0	0

Tamarack 2.3 Rail – Gable Flush-Mount on 30 Foot Maximum Mean Roof Height – Portrait – Panel Length = 96 Inches or Less

Ground Snow Load	Exposure Category	Roof Pitch	Roof Angle	Wind Speed (mph)	95			100			105			110			115			120			125			130			140			150			160			170			180			190		
				Roof Area	1	2	3	1	2	3	1	2	3	1	2	3	1	2	3	1	2	3	1	2	3	1	2	3	1	2	3	1	2	3	1	2	3	1	2	3	1	2	3	1	2	3
0	B	Flat	0	Non-Exposed	82	82	82	82	82	82	82	82	82	82	82	78	82	82	73	82	82	69	82	79	65	82	75	62	82	68	56	76	62	51	70	57	47	65	53	44	60	50	41	56	46	38
				Exposed	82	82	72	82	81	67	82	76	63	82	72	59	82	68	56	78	64	53	74	61	50	70	58	48	64	53	43	58	48	40	54	45	37	50	41	34	47	39	32	44	36	0
		1:12	4.8	Non-Exposed	81	81	81	81	81	81	81	81	81	81	81	77	81	81	72	81	81	68	81	78	65	81	74	62	81	68	56	75	62	51	69	57	47	64	53	44	60	49	41	56	46	38
				Exposed	81	81	71	81	80	67	81	75	62	81	71	59	81	67	56	77	64	53	73	60	50	70	57	48	63	52	43	58	48	40	54	45	37	50	41	34	46	39	0	43	36	0
		2:12	9.5	Non-Exposed	79	79	79	79	79	79	79	79	79	79	79	74	79	79	70	79	74	66	79	70	62	79	66	59	74	60	53	66	55	49	59	50	45	55	46	41	52	43	38	49	40	36
				Exposed	79	78	69	79	72	64	79	67	60	79	63	56	73	59	53	68	56	50	64	53	47	60	51	45	55	46	41	51	42	37	47	39	34	44	36	32	41	33	0	39	0	0
		3:12	14.0	Non-Exposed	78	78	78	78	78	78	78	78	78	78	78	74	78	78	69	78	74	65	78	70	62	78	66	59	73	60	53	65	54	48	59	50	45	55	46	41	52	43	38	48	40	36
				Exposed	78	77	68	78	71	64	78	67	59	78	63	56	72	59	53	68	56	50	63	53	47	59	50	45	54	46	41	50	42	37	47	38	34	44	36	32	41	33	0	39	0	0
		4:12	18.4	Non-Exposed	78	78	78	78	78	78	78	78	78	78	78	73	78	77	69	78	73	65	78	69	61	78	65	58	72	59	53	65	54	48	59	50	44	55	46	41	51	43	38	48	40	36
				Exposed	78	76	68	78	71	63	78	66	59	77	62	56	72	59	52	67	56	50	63	53	47	59	50	45	54	46	41	50	42	37	47	38	34	44	36	32	41	33	0	38	0	0
		5:12	22.6	Non-Exposed	77	77	77	77	77	77	77	77	77	77	77	77	77	77	77	77	77	75	77	76	71	77	73	67	77	66	61	76	60	55	70	55	51	65	51	47	60	48	44	57	45	41
				Exposed	77	77	77	77	77	73	77	74	68	77	69	64	77	65	60	77	62	57	74	59	54	70	56	51	64	51	46	59	46	42	55	43	39	51	40	36	48	37	33	45	34	0
		6:12	26.6	Non-Exposed	76	76	76	76	76	76	76	76	76	76	76	76	76	76	76	76	76	75	76	76	71	76	72	67	76	65	61	75	60	55	70	55	51	64	51	47	60	48	43	56	44	40
				Exposed	76	76	76	76	76	73	76	73	68	76	69	64	76	65	60	76	62	57	73	58	54	70	56	51	64	51	46	59	46	42	54	43	39	51	40	36	48	37	33	45	34	0
		7:12	30.3	Non-Exposed	76	76	76	76	76	76	76	76	76	76	76	76	76	76	76	76	76	76	76	76	75	76	76	71	76	74	65	76	68	59	70	62	55	65	58	51	60	54	47	56	50	44
				Exposed	76	76	76	76	76	76	76	76	72	76	76	68	76	73	64	76	69	61	74	66	58	70	63	55	64	57	50	58	53	46	53	49	42	49	45	39	46	42	37	43	39	34
		8:12	33.7	Non-Exposed	75	75	75	75	75	75	75	75	75	75	75	75	75	75	75	75	75	75	75	75	74	75	75	70	75	73	64	75	67	59	70	62	54	64	58	51	60	54	47	55	50	44
				Exposed	75	75	75	75	75	75	75	75	71	75	75	67	75	73	64	75	69	61	74	66	58	70	63	55	63	57	50	58	52	46	53	48	42	49	45	39	46	42	37	43	39	34
		9:12	36.9	Non-Exposed	75	75	75	75	75	75	75	75	75	75	75	75	75	75	75	75	75	75	75	75	74	75	75	70	75	73	64	75	67	59	69	62	54	64	57	50	59	54	47	55	50	44
				Exposed	75	75	75	75	75	75	75	75	71	75	75	67	75	72	64	75	69	60	73	65	57	70	62	55	63	57	50	58	52	46	53	48	42	49	45	39	46	42	37	43	39	34
		10:12	39.8	Non-Exposed	75	75	75	75	75	75	75	75	75	75	75	75	75	75	75	75	75	75	75	75	73	75	75	70	75	72	64	75	67	59	69	62	54	64	57	50	59	53	47	55	50	44
				Exposed	75	75	75	75	75	75	75	75	71	75	75	67	75	72	63	75	68	60	73	65	57	69	62	54	63	57	50	58	52	46	53	48	42	49	45	39	46	42	37	42	39	34
		11:12	42.5	Non-Exposed	74	74	74	74	74	74	74	74	74	74	74	74	74	74	74	74	74	74	74	74	73	74	74	69	74	72	63	74	66	58	68	61	54	63	57	50	59	53	47	55	50	44
				Exposed	74	74	74	74	74	74	74	74	70	74	74	66	74	72	63	74	68	60	72	65	57	69	62	54	63	56	50	57	52	46	53	48	42	49	45	39	45	42	37	42	39	34
		12:12	45	Non-Exposed	74	74	74	74	74	74	74	74	74	74	74	74	74	74	74	74	74	74	74	74	72	74	74	69	74	72	63	74	66	58	68	61	54	63	57	50	59	53	47	55	50	44
				Exposed	74	74	74	74	74	74	74	74	70	74	74	66	74	71	63	74	68	60	72	65	57	69	62	54	62	56	50	57	52	46	53	48	42	49	45	39	45	42	36	42	39	34
	C	Flat	0	Non-Exposed	82	82	75	82	82	70	82	80	66	82	75	62	82	71	58	82	67	55	77	63	52	73	60	50	67	55	45	61	50	42	56	47	38	52	43	36	49	40	33	45	38	0
				Exposed	82	69	57	80	65	54	75	61	50	70	58	48	66	54	45	63	52	43	59	49	41	57	47	39	52	43	35	47	39	32	44	36	0	41	34	0	38	0	0	35	0	0
		1:12	4.8	Non-Exposed	81	81	75	81	81	70	81	79	65	81	74	61	81	70	58	81	66	55	77	63	52	73	60	50	66	55	45	61	50	41	56	46	38	52	43	35	48	40	33	45	38	0
				Exposed	81	69	57	79	65	53	74	61	50	70	57	47	66	54	45	62	51	43	59	49	40	56	47	38	51	43	35	47	39	32	44	36	0	41	34	0	38	0	0	35	0	0
		2:12	9.5	Non-Exposed	79	79	72	79	76	67	79	71	63	79	66	59	78	62	55	72	59	52	67	56	49	63	53	47	57	48	43	53	44	39	49	40	36	46	37	33	43	35	0	40	32	0
				Exposed	76	61	54	70	57	51	64	54	48	60	50	45	56	48	42	54	45	40	51	43	38	49	41	36	45	37	33	42	34	0	39	0	0	36	0	0	34	0	0	0	0	0
		3:12	14.0	Non-Exposed	78	78	71	78	75	67	78	70	62	78	66	58	77	62	55	71	58	52	67	55	49	63	53	47	57	48	43	52	44	39	49	40	36	45	37	33	43	35	0	40	32	0
				Exposed	75	61	54	69	57	51	64	53	47	59	50	45	56	47	42	54	45	40	51	42	38	49	40	36	45	37	33	42	34	0	39	0	0	36	0	0	34	0	0	0	0	0
		4:12	18.4	Non-Exposed	78	78	71	78	74	66	78	69	62	78	65	58	76	62	55	71	58	52	66	55	49	62	52	47	56	48	42	52	43	39	48	40	36	45	37	33	42	34	0	40	32	0
				Exposed	74	61	54	68	57	50	63	53	47	59	50	45	56	47	42	53	45	40	51	42	38	49	40	36	45	37	33	41	34	0	39	0	0	36	0	0	34	0	0	0	0	0
		5:12	22.6	Non-Exposed	77	77	77	77	77	77	77	77	72	77	72	67	77	68	63	77	65	60	77	61	56	74	58	54	67	53	49	61	48	44	57	45	41	53	41	38	50	39	35	47	36	33
				Exposed	77	67	62	77	63	58	75	59	54	70	56	51	66	53	48	63	50	46	60	47	43	57	45	41	53	41	37	49	38	34	45	35	31	42	32	0	40	0	0	37	0	0
		6:12	26.6	Non-Exposed	76	76	76	76	76	76	76	76	71	76	72	67	76	68	63	76	64	59	76	61	56	73	58	53	66	53	48	61	48	44	57	45	41	53	41	38	50	38	35	47	36	33
				Exposed	76	67	62	76	63	58	74	59	54	70	55	51	66	52	48	63	50	45	59	47	43	57	45	41	52	41	37	48	37	34	45	35	0	42	32	0	40	0	0	37	0	0
		7:12	30.3	Non-Exposed	76	76	76	76	76	76	76	76	75	76	76	71	76	76	67	76	72	63	76	69	60	74	66	57	67	60	52	61	55	48	56	51	44	52	47	41	48	44	38	45	41	36
				Exposed	76	75	66	76	71	62	75	66	58	70	63	55	66	59	52	63	56	49	59	53	47	56	51	45	51	46	41	47	43	37	43	39	35	40	37	32	37	34	0	34	32	0
		8:12	33.7	Non-Exposed	75	75	75	75	75	75	75	75	75	75	75	70	75	75	67	75	72	63	75	68	60	73	65	57	66	59	52	61	55	48	56	50	44	51	47	41	48	44	38	45	41	36
				Exposed	75	75	66	75	70	62	74	66	58	70	62	55	66	59	52	62	56	49	59	53	47	56	51	44	51	46	41	47	43	37	43	39	34	40	37	32	37	34	0	34	0	0
		9:12	36.9	Non-Exposed	75	75	75	75	75	75	75	75	74	75	75	70	75	75	66	75	72	63	75	68	60	73	65	57	66	59	52	60	54	48	55	50	44	51	47	41	48	44	38	44	41	36
				Exposed	75	74	65	75	70	61	74	66	58	69	62	54	65	59	52	62	56	49	59	53	47	56	51	44	51	46	41	46	43	37	43	39	34	40	37	32	37	34	0	34	0	0
		10:12	39.8	Non-Exposed	75	75	75	75	75	75	75	75	74	75	75	70	75	75	66	75	71	63	75	68	60	72	65	57	66	59	52	60	54	48	55	50	44	51	47	41	48	44	38	44	41	36
				Exposed	75	74	65	75	69	61	73	65	57	69	62	54	65	59	51	62	56	49	59	53	46	56	51	44	51	46	40	46	42	37	43	39	34	39	36	0	37	34	0	34	0	0
		11:12	42.5	Non-Exposed	74	74	74	74	74	74	74	74	73	74	74	69	74	74	66	74	71	62	74	67	59	72	64	57	65	59	52	60	54	48	55	50	44	51	47	41	47	43	38	44	41	36
				Exposed	74	73	65	74	69	61	73	65	57	69	62	54	65	58	51	61	55	49	58	53	46	55	50	44	50	46	40	46	42	37	43	39	34	39	36	0	37	34	0	34	0	0
		12:12	45	Non-Exposed	74	74	74	74	74	74	74	74	73	74	74	69	74	74	65	74	71	62	74	67	59	72	64	56	65	59	52	60	54	47	55	50	44	51	46	41	47	43	38	44	41	36
				Exposed	74	73	64	74	69	61	73	65	57	68	61	54	65	58	51	61	55	49	58	53	46	55	50	44	50	46	40	46	42	37	42	39	34	39	36	0	37	34	0	34	0	0
	D	Flat	0	Non-Exposed	82	81	67	82	76	63	82	71	59	82	67	55	77	63	52	73	60	50	69	57	47	66	54	45	60	49	41	55	45	37	51	42	35	47	39	32	44	36	0	41	34	0
				Exposed	76	62	52	71	58	48	67	55	45	63	52	43	59	49	40	56	47	38	53	44	36	51	42	35	46	39	0	43	36	0	39	33	0	37	0	0	34	0	0	32	0	0
		1:12	4.8	Non-Exposed	81	81	67	81	75	62	81	71	59	81	67	55	77	63	52	73	60	49	69	57	47	65	54	45	60	49	41	55	45	37	50	42	34	47	39	32	44	36	0	41	34	0
				Exposed	76	62	51	71	58	48	66	55	45	63	52	43	59	49	40	56	46	38	53	44	36	51	42	35	46	39	0	43	35	0	39	33	0	37	0	0	34	0	0	0	0	0
		2:12	9.5	Non-Exposed	79	72	64	79	67	60	79	63	56	73	59	52	67	56	49	63	53	47	59	50	44	56	47	42	52	43	38	48	39	35	44	36	32	41	33	0	39	0	0	36	0	0
				Exposed	66	55	49	61	51	45	57	48	43	54	45	40	51	43	38	49	40	36	47	38	34	45	36	32	41	33	0	38	0	0	35	0	0	33	0	0	0	0	0	0	0	0
		3:12	14.0	Non-Exposed	78	72	64	78	67	59	78	62	56	72	59	52	67	55	49	62	52	47	59	50	44	56	47	42	51	43	38	48	39	35	44	36	32	41	33	0	39	0	0	36	0	0
				Exposed	65	54	49	60	51	45	57	48	43	54	45	40	51	42	38	49	40	36	46	38	34	44	36	32	41	33	0	38	0	0	35	0	0	33	0	0	0	0	0	0	0	0
		4:12	18.4	Non-Exposed	78	71	63	78	66	59	77	62	55	71	58	52	66	55	49	62	52	46	58	49	44	56	47	42	51	43	38	47	39	35	44	36	32	41	33	0	39	0	0	36	0	0
				Exposed	65	54	48	60	51	45	56	48	42	54	45	40	51	42	38	48	40	36	46	38	34	44	36	32	41	33	0	38	0	0	35	0	0	0	0	0	0	0	0	0	0	0
		5:12	22.6	Non-Exposed	77	77	73	77	73	68	77	69	64	77	65	60	77	61	56	73	58	53	69	55	50	66	52	48	60	48	43	56	44	40	52	40	36	48	37	34	45	35	31	43	32	0
				Exposed	76	60	56	71	56	52	67	53	49	63	50	46	60	47	43	57	45	41	54	42	39	52	40	37	48	37	33	44	34	0	41	0	0	38	0	0	36	0	0	34	0	0
		6:12	26.6	Non-Exposed	76	76	73	76	73	68	76	68	63	76	64	60	76	61	56	73	58	53	69	55	50	66	52	48	60	47	43	55	43	40	51	40	36	48	37	34	45	35	0	42	32	0
				Exposed	75	60	55	71	56	52	67	53	48	63	50	46	59	47	43	57	45	41	54	42	39	52	40	37	48	37	33	44	34	0	41	0	0	38	0	0	36	0	0	34	0	0
		7:12	30.3	Non-Exposed	76	76	76	76	76	72	76	76	67	76	73	64	76	69	60	73	65	57	69	62	54	66	59	52	60	54	47	54	49	43	50	46	40	46	42	37	43	39	35	40	37	32
				Exposed	76	68	59	71	64	56	67	60	52	63	56	49	59	53	47	56	51	44	53	48	42	50	46	40	46	42	37	42	39	34	38	36	0	36	33	0	33	0	0	0	0	0
		8:12	33.7	Non-Exposed	75	75	75	75	75	71	75	75	67	75	72	63	75	68	60	73	65	57	69	62	54	65	59	51	59	54	47	54	49	43	50	46	40	46	42	37	43	39	34	40	37	32
				Exposed	75	67	59	71	63	55	66	60	52	62	56	49	59	53	47	56	51	44	53	48	42	50	46	40	46	42	37	42	38	34	38	36	0	36	33	0	33	0	0	0	0	0
		9:12	36.9	Non-Exposed	75	75	75	75	75	71	75	75	67	75	72	63	75	68	60	72	65	57	69	61	54	65	59	51	59	53	47	54	49	43	50	45	40	46	42	37	43	39	34	40	37	32
				Exposed	75	67	59	70	63	55	66	59	52	62	56	49	59	53	47	56	50	44	53	48	42	50	46	40	46	42	37	42	38	34	38	35	0	35	33	0	33	0	0	0	0	0
		10:12	39.8	Non-Exposed	75	75	75	75	75	71	75	75	66	75	71	63	75	68	59	72	64	56	68	61	54	65	58	51	59	53	47	54	49	43	50	45	40	46	42	37	43	39	34	40	37	32
				Exposed	75	67	59	70	63	55	66	59	52	62	56	49	58	53	46	55	50	44	53	48	42	50	46	40	45	42	37	42	38	34	38	35	0	35	33	0	33	0	0	0	0	0
		11:12	42.5	Non-Exposed	74	74	74	74	74	70	74	74	66	74	71	63	74	67	59	72	64	56	68	61	54	65	58	51	59	53	47	54	49	43	49	45	40	46	42	37	43	39	34	40	37	32
				Exposed	74	66	58	70	62	55	65	59	52	62	56	49	58	53	46	55	50	44	52	48	42	50	46	40	45	42	36	41	38	34	38	35	0	35	33	0	33	0	0	0	0	0
		12:12	45	Non-Exposed	74	74	74	74	74	70	74	74	66	74	71	62	74	67	59	71	64	56	68	61	53	64	58	51	59	53	47	54	49	43	49	45	40	46	42	37	43	39	34	40	37	32
				Exposed	74	66	58	69	62	55	65	59	52	61	56	49	58	53	46	55	50	44	52	48	42	50	45	40	45	42	36	41	38	33	38	35	0	35	33	0	33	0	0	0	0	0

Tamarack 2.3 Rail – Gable Flush-Mount on 30 Foot Maximum Mean Roof Height – Portrait – Panel Length = 96 Inches or Less

Ground Snow Load	Exposure Category	Roof Pitch	Roof Angle	Wind Speed (mph)	95			100			105			110			115			120			125			130			140			150			160			170			180			190		
				Roof Area	1	2	3	1	2	3	1	2	3	1	2	3	1	2	3	1	2	3	1	2	3	1	2	3	1	2	3	1	2	3	1	2	3	1	2	3	1	2	3	1	2	3
5	B	Flat	0	Non-Exposed	78	78	78	78	78	78	78	78	78	78	78	78	78	78	73	78	78	69	78	78	65	78	75	62	78	68	56	76	62	51	70	57	47	65	53	44	60	50	41	56	46	38
				Exposed	78	78	72	78	78	67	78	76	63	78	72	59	78	68	56	78	64	53	74	61	50	70	58	48	64	53	43	58	48	40	54	45	37	50	41	34	47	39	32	44	36	0
		1:12	4.8	Non-Exposed	75	75	75	75	75	75	75	75	75	75	75	75	75	75	72	75	75	68	75	75	65	75	74	62	75	68	56	75	62	51	69	57	47	64	53	44	60	49	41	56	46	38
				Exposed	75	75	71	75	75	67	75	75	62	75	71	59	75	67	56	75	64	53	73	60	50	70	57	48	63	52	43	58	48	40	54	45	37	50	41	34	46	39	0	43	36	0
		2:12	9.5	Non-Exposed	73	73	73	73	73	73	73	73	73	73	73	73	73	73	70	73	73	66	73	70	62	73	66	59	73	60	53	66	55	49	59	50	45	55	46	41	52	43	38	49	40	36
				Exposed	73	73	69	73	72	64	73	67	60	73	63	56	73	59	53	68	56	50	64	53	47	60	51	45	55	46	41	51	42	37	47	39	34	44	36	32	41	33	0	39	0	0
		3:12	14.0	Non-Exposed	71	71	71	71	71	71	71	71	71	71	71	71	71	71	69	71	71	65	71	70	62	71	66	59	71	60	53	65	54	48	59	50	45	55	46	41	52	43	38	48	40	36
				Exposed	71	71	68	71	71	64	71	67	59	71	63	56	71	59	53	68	56	50	63	53	47	59	50	45	54	46	41	50	42	37	47	38	34	44	36	32	41	33	0	39	0	0
		4:12	18.4	Non-Exposed	73	73	73	73	73	73	73	73	73	73	73	73	73	73	69	73	73	65	73	69	61	73	65	58	72	59	53	65	54	48	59	50	44	55	46	41	51	43	38	48	40	36
				Exposed	73	73	68	73	71	63	73	66	59	73	62	56	72	59	52	67	56	50	63	53	47	59	50	45	54	46	41	50	42	37	47	38	34	44	36	32	41	33	0	38	0	0
		5:12	22.6	Non-Exposed	72	72	72	72	72	72	72	72	72	72	72	72	72	72	72	72	72	72	72	72	71	72	72	67	72	66	61	72	60	55	70	55	51	65	51	47	60	48	44	57	45	41
				Exposed	72	72	72	72	72	72	72	72	68	72	69	64	72	65	60	72	62	57	72	59	54	70	56	51	64	51	46	59	46	42	55	43	39	51	40	36	48	37	33	45	34	0
		6:12	26.6	Non-Exposed	73	73	73	73	73	73	73	73	73	73	73	73	73	73	73	73	73	73	73	73	71	73	72	67	73	65	61	73	60	55	70	55	51	64	51	47	60	48	43	56	44	40
				Exposed	73	73	73	73	73	73	73	73	68	73	69	64	73	65	60	73	62	57	73	58	54	70	56	51	64	51	46	59	46	42	54	43	39	51	40	36	48	37	33	45	34	0
		7:12	30.3	Non-Exposed	73	73	73	73	73	73	73	73	73	73	73	73	73	73	73	73	73	73	73	73	73	73	73	71	73	73	65	73	68	59	70	62	55	65	58	51	60	54	47	56	50	44
				Exposed	73	73	73	73	73	73	73	73	72	73	73	68	73	73	64	73	69	61	73	66	58	70	63	55	64	57	50	58	53	46	53	49	42	49	45	39	46	42	37	43	39	34
		8:12	33.7	Non-Exposed	73	73	73	73	73	73	73	73	73	73	73	73	73	73	73	73	73	73	73	73	73	73	73	70	73	73	64	73	67	59	70	62	54	64	58	51	60	54	47	55	50	44
				Exposed	73	73	73	73	73	73	73	73	71	73	73	67	73	73	64	73	69	61	73	66	58	70	63	55	63	57	50	58	52	46	53	48	42	49	45	39	46	42	37	43	39	34
		9:12	36.9	Non-Exposed	74	74	74	74	74	74	74	74	74	74	74	74	74	74	74	74	74	74	74	74	74	74	74	70	74	73	64	74	67	59	69	62	54	64	57	50	59	54	47	55	50	44
				Exposed	74	74	74	74	74	74	74	74	71	74	74	67	74	72	64	74	69	60	73	65	57	70	62	55	63	57	50	58	52	46	53	48	42	49	45	39	46	42	37	43	39	34
		10:12	39.8	Non-Exposed	74	74	74	74	74	74	74	74	74	74	74	74	74	74	74	74	74	74	74	74	73	74	74	70	74	72	64	74	67	59	69	62	54	64	57	50	59	53	47	55	50	44
				Exposed	74	74	74	74	74	74	74	74	71	74	74	67	74	72	63	74	68	60	73	65	57	69	62	54	63	57	50	58	52	46	53	48	42	49	45	39	46	42	37	42	39	34
		11:12	42.5	Non-Exposed	74	74	74	74	74	74	74	74	74	74	74	74	74	74	74	74	74	74	74	74	73	74	74	69	74	72	63	74	66	58	68	61	54	63	57	50	59	53	47	55	50	44
				Exposed	74	74	74	74	74	74	74	74	70	74	74	66	74	72	63	74	68	60	72	65	57	69	62	54	63	56	50	57	52	46	53	48	42	49	45	39	45	42	37	42	39	34
		12:12	45	Non-Exposed	74	74	74	74	74	74	74	74	74	74	74	74	74	74	74	74	74	74	74	74	72	74	74	69	74	72	63	74	66	58	68	61	54	63	57	50	59	53	47	55	50	44
				Exposed	74	74	74	74	74	74	74	74	70	74	74	66	74	71	63	74	68	60	72	65	57	69	62	54	62	56	50	57	52	46	53	48	42	49	45	39	45	42	36	42	39	34
	C	Flat	0	Non-Exposed	78	78	75	78	78	70	78	78	66	78	75	62	78	71	58	78	67	55	77	63	52	73	60	50	67	55	45	61	50	42	56	47	38	52	43	36	49	40	33	45	38	0
				Exposed	78	69	57	78	65	54	75	61	50	70	58	48	66	54	45	63	52	43	59	49	41	57	47	39	52	43	35	47	39	32	44	36	0	41	34	0	38	0	0	35	0	0
		1:12	4.8	Non-Exposed	75	75	75	75	75	70	75	75	65	75	74	61	75	70	58	75	66	55	75	63	52	73	60	50	66	55	45	61	50	41	56	46	38	52	43	35	48	40	33	45	38	0
				Exposed	75	69	57	75	65	53	74	61	50	70	57	47	66	54	45	62	51	43	59	49	40	56	47	38	51	43	35	47	39	32	44	36	0	41	34	0	38	0	0	35	0	0
		2:12	9.5	Non-Exposed	73	73	72	73	73	67	73	71	63	73	66	59	73	62	55	72	59	52	67	56	49	63	53	47	57	48	43	53	44	39	49	40	36	46	37	33	43	35	0	40	32	0
				Exposed	73	61	54	70	57	51	64	54	48	60	50	45	56	48	42	54	45	40	51	43	38	49	41	36	45	37	33	42	34	0	39	0	0	36	0	0	34	0	0	0	0	0
		3:12	14.0	Non-Exposed	71	71	71	71	71	67	71	70	62	71	66	58	71	62	55	71	58	52	67	55	49	63	53	47	57	48	43	52	44	39	49	40	36	45	37	33	43	35	0	40	32	0
				Exposed	71	61	54	69	57	51	64	53	47	59	50	45	56	47	42	54	45	40	51	42	38	49	40	36	45	37	33	42	34	0	39	0	0	36	0	0	34	0	0	0	0	0
		4:12	18.4	Non-Exposed	73	73	71	73	73	66	73	69	62	73	65	58	73	62	55	71	58	52	66	55	49	62	52	47	56	48	42	52	43	39	48	40	36	45	37	33	42	34	0	40	32	0
				Exposed	73	61	54	68	57	50	63	53	47	59	50	45	56	47	42	53	45	40	51	42	38	49	40	36	45	37	33	41	34	0	39	0	0	36	0	0	34	0	0	0	0	0
		5:12	22.6	Non-Exposed	72	72	72	72	72	72	72	72	72	72	72	67	72	68	63	72	65	60	72	61	56	72	58	54	67	53	49	61	48	44	57	45	41	53	41	38	50	39	35	47	36	33
				Exposed	72	67	62	72	63	58	72	59	54	70	56	51	66	53	48	63	50	46	60	47	43	57	45	41	53	41	37	49	38	34	45	35	31	42	32	0	40	0	0	37	0	0
		6:12	26.6	Non-Exposed	73	73	73	73	73	73	73	73	71	73	72	67	73	68	63	73	64	59	73	61	56	73	58	53	66	53	48	61	48	44	57	45	41	53	41	38	50	38	35	47	36	33
				Exposed	73	67	62	73	63	58	73	59	54	70	55	51	66	52	48	63	50	45	59	47	43	57	45	41	52	41	37	48	37	34	45	35	0	42	32	0	40	0	0	37	0	0
		7:12	30.3	Non-Exposed	73	73	73	73	73	73	73	73	73	73	73	71	73	73	67	73	72	63	73	69	60	73	66	57	67	60	52	61	55	48	56	51	44	52	47	41	48	44	38	45	41	36
				Exposed	73	73	66	73	71	62	73	66	58	70	63	55	66	59	52	63	56	49	59	53	47	56	51	45	51	46	41	47	43	37	43	39	35	40	37	32	37	34	0	34	32	0
		8:12	33.7	Non-Exposed	73	73	73	73	73	73	73	73	73	73	73	70	73	73	67	73	72	63	73	68	60	73	65	57	66	59	52	61	55	48	56	50	44	51	47	41	48	44	38	45	41	36
				Exposed	73	73	66	73	70	62	73	66	58	70	62	55	66	59	52	62	56	49	59	53	47	56	51	44	51	46	41	47	43	37	43	39	34	40	37	32	37	34	0	34	0	0
		9:12	36.9	Non-Exposed	74	74	74	74	74	74	74	74	74	74	74	70	74	74	66	74	72	63	74	68	60	73	65	57	66	59	52	60	54	48	55	50	44	51	47	41	48	44	38	44	41	36
				Exposed	74	74	65	74	70	61	74	66	58	69	62	54	65	59	52	62	56	49	59	53	47	56	51	44	51	46	41	46	43	37	43	39	34	40	37	32	37	34	0	34	0	0
		10:12	39.8	Non-Exposed	74	74	74	74	74	74	74	74	74	74	74	70	74	74	66	74	71	63	74	68	60	72	65	57	66	59	52	60	54	48	55	50	44	51	47	41	48	44	38	44	41	36
				Exposed	74	74	65	74	69	61	73	65	57	69	62	54	65	59	51	62	56	49	59	53	46	56	51	44	51	46	40	46	42	37	43	39	34	39	36	0	37	34	0	34	0	0
		11:12	42.5	Non-Exposed	74	74	74	74	74	74	74	74	73	74	74	69	74	74	66	74	71	62	74	67	59	72	64	57	65	59	52	60	54	48	55	50	44	51	47	41	47	43	38	44	41	36
				Exposed	74	73	65	74	69	61	73	65	57	69	62	54	65	58	51	61	55	49	58	53	46	55	50	44	50	46	40	46	42	37	43	39	34	39	36	0	37	34	0	34	0	0
		12:12	45	Non-Exposed	74	74	74	74	74	74	74	74	73	74	74	69	74	74	65	74	71	62	74	67	59	72	64	56	65	59	52	60	54	47	55	50	44	51	46	41	47	43	38	44	41	36
				Exposed	74	73	64	74	69	61	73	65	57	68	61	54	65	58	51	61	55	49	58	53	46	55	50	44	50	46	40	46	42	37	42	39	34	39	36	0	37	34	0	34	0	0
	D	Flat	0	Non-Exposed	78	78	67	78	76	63	78	71	59	78	67	55	77	63	52	73	60	50	69	57	47	66	54	45	60	49	41	55	45	37	51	42	35	47	39	32	44	36	0	41	34	0
				Exposed	76	62	52	71	58	48	67	55	45	63	52	43	59	49	40	56	47	38	53	44	36	51	42	35	46	39	0	43	36	0	39	33	0	37	0	0	34	0	0	32	0	0
		1:12	4.8	Non-Exposed	75	75	67	75	75	62	75	71	59	75	67	55	75	63	52	73	60	49	69	57	47	65	54	45	60	49	41	55	45	37	50	42	34	47	39	32	44	36	0	41	34	0
				Exposed	75	62	51	71	58	48	66	55	45	63	52	43	59	49	40	56	46	38	53	44	36	51	42	35	46	39	0	43	35	0	39	33	0	37	0	0	34	0	0	0	0	0
		2:12	9.5	Non-Exposed	73	72	64	73	67	60	73	63	56	73	59	52	67	56	49	63	53	47	59	50	44	56	47	42	52	43	38	48	39	35	44	36	32	41	33	0	39	0	0	36	0	0
				Exposed	66	55	49	61	51	45	57	48	43	54	45	40	51	43	38	49	40	36	47	38	34	45	36	32	41	33	0	38	0	0	35	0	0	33	0	0	0	0	0	0	0	0
		3:12	14.0	Non-Exposed	71	71	64	71	67	59	71	62	56	71	59	52	67	55	49	62	52	47	59	50	44	56	47	42	51	43	38	48	39	35	44	36	32	41	33	0	39	0	0	36	0	0
				Exposed	65	54	49	60	51	45	57	48	43	54	45	40	51	42	38	48	40	36	46	38	34	44	36	32	41	33	0	38	0	0	35	0	0	33	0	0	0	0	0	0	0	0
		4:12	18.4	Non-Exposed	73	71	63	73	66	59	73	62	55	71	58	52	66	55	49	62	52	46	58	49	44	56	47	42	51	43	38	47	39	35	44	36	32	41	33	0	39	0	0	36	0	0
				Exposed	65	54	48	60	51	45	56	48	42	54	45	40	51	42	38	48	40	36	46	38	34	44	36	32	41	33	0	38	0	0	35	0	0	0	0	0	0	0	0	0	0	0
		5:12	22.6	Non-Exposed	72	72	72	72	72	68	72	69	64	72	65	60	72	61	56	72	58	53	69	55	50	66	52	48	60	48	43	56	44	40	52	40	36	48	37	34	45	35	31	43	32	0
				Exposed	72	60	56	71	56	52	67	53	49	63	50	46	60	47	43	57	45	41	54	42	39	52	40	37	48	37	33	44	34	0	41	0	0	38	0	0	36	0	0	34	0	0
		6:12	26.6	Non-Exposed	73	73	73	73	73	68	73	68	63	73	64	60	73	61	56	73	58	53	69	55	50	66	52	48	60	47	43	55	43	40	51	40	36	48	37	34	45	35	0	42	32	0
				Exposed	73	60	55	71	56	52	67	53	48	63	50	46	59	47	43	57	45	41	54	42	39	52	40	37	48	37	33	44	34	0	41	0	0	38	0	0	36	0	0	34	0	0
		7:12	30.3	Non-Exposed	73	73	73	73	73	72	73	73	67	73	73	64	73	69	60	73	65	57	69	62	54	66	59	52	60	54	47	54	49	43	50	46	40	46	42	37	43	39	35	40	37	32
				Exposed	73	68	59	71	64	56	67	60	52	63	56	49	59	53	47	56	51	44	53	48	42	50	46	40	46	42	37	42	39	34	38	36	0	36	33	0	33	0	0	0	0	0
		8:12	33.7	Non-Exposed	73	73	73	73	73	71	73	73	67	73	72	63	73	68	60	73	65	57	69	62	54	65	59	51	59	54	47	54	49	43	50	46	40	46	42	37	43	39	34	40	37	32
				Exposed	73	67	59	71	63	55	66	60	52	62	56	49	59	53	47	56	51	44	53	48	42	50	46	40	46	42	37	42	38	34	38	36	0	36	33	0	33	0	0	0	0	0
		9:12	36.9	Non-Exposed	74	74	74	74	74	71	74	74	67	74	72	63	74	68	60	72	65	57	69	61	54	65	59	51	59	53	47	54	49	43	50	45	40	46	42	37	43	39	34	40	37	32
				Exposed	74	67	59	70	63	55	66	59	52	62	56	49	59	53	47	56	50	44	53	48	42	50	46	40	46	42	37	42	38	34	38	35	0	35	33	0	33	0	0	0	0	0
		10:12	39.8	Non-Exposed	74	74	74	74	74	71	74	74	66	74	71	63	74	68	59	72	64	56	68	61	54	65	58	51	59	53	47	54	49	43	50	45	40	46	42	37	43	39	34	40	37	32
				Exposed	74	67	59	70	63	55	66	59	52	62	56	49	58	53	46	55	50	44	53	48	42	50	46	40	45	42	37	42	38	34	38	35	0	35	33	0	33	0	0	0	0	0
		11:12	42.5	Non-Exposed	74	74	74	74	74	70	74	74	66	74	71	63	74	67	59	72	64	56	68	61	54	65	58	51	59	53	47	54	49	43	49	45	40	46	42	37	43	39	34	40	37	32
				Exposed	74	66	58	70	62	55	65	59	52	62	56	49	58	53	46	55	50	44	52	48	42	50	46	40	45	42	36	41	38	34	38	35	0	35	33	0	33	0	0	0	0	0
		12:12	45	Non-Exposed	74	74	74	74	74	70	74	74	66	74	71	62	74	67	59	71	64	56	68	61	53	64	58	51	59	53	47	54	49	43	49	45	40	46	42	37	43	39	34	40	37	32
				Exposed	74	66	58	69	62	55	65	59	52	61	56	49	58	53	46	55	50	44	52	48	42	50	45	40	45	42	36	41	38	33	38	35	0	35	33	0	33	0	0	0	0	0

Tamarack 2.3 Rail – Gable Flush-Mount on 30 Foot Maximum Mean Roof Height – Portrait – Panel Length = 96 Inches or Less

Ground Snow Load	Exposure Category	Roof Pitch	Roof Angle	Wind Speed (mph)	95			100			105			110			115			120			125			130			140			150			160			170			180			190		
				Roof Area	1	2	3	1	2	3	1	2	3	1	2	3	1	2	3	1	2	3	1	2	3	1	2	3	1	2	3	1	2	3	1	2	3	1	2	3	1	2	3	1	2	3
10	B	Flat	0	Non-Exposed	69	69	69	69	69	69	69	69	69	69	69	69	69	69	69	69	69	69	69	69	65	69	69	62	69	68	56	69	62	51	69	57	47	65	53	44	60	50	41	56	46	38
				Exposed	69	69	69	69	69	67	69	69	63	69	69	59	69	68	56	69	64	53	69	61	50	69	58	48	64	53	43	58	48	40	54	45	37	50	41	34	47	39	32	44	36	0
		1:12	4.8	Non-Exposed	66	66	66	66	66	66	66	66	66	66	66	66	66	66	66	66	66	66	66	66	65	66	66	62	66	66	56	66	62	51	66	57	47	64	53	44	60	49	41	56	46	38
				Exposed	66	66	66	66	66	66	66	66	62	66	66	59	66	66	56	66	64	53	66	60	50	66	57	48	63	52	43	58	48	40	54	45	37	50	41	34	46	39	0	43	36	0
		2:12	9.5	Non-Exposed	64	64	64	64	64	64	64	64	64	64	64	64	64	64	64	64	64	64	64	64	62	64	64	59	64	60	53	64	55	49	59	50	45	55	46	41	52	43	38	49	40	36
				Exposed	64	64	64	64	64	64	64	64	60	64	63	56	64	59	53	64	56	50	64	53	47	60	51	45	55	46	41	51	42	37	47	39	34	44	36	32	41	33	0	39	0	0
		3:12	14.0	Non-Exposed	62	62	62	62	62	62	62	62	62	62	62	62	62	62	62	62	62	62	62	62	62	62	62	59	62	60	53	62	54	48	59	50	45	55	46	41	52	43	38	48	40	36
				Exposed	62	62	62	62	62	62	62	62	59	62	62	56	62	59	53	62	56	50	62	53	47	59	50	45	54	46	41	50	42	37	47	38	34	44	36	32	41	33	0	39	0	0
		4:12	18.4	Non-Exposed	64	64	64	64	64	64	64	64	64	64	64	64	64	64	64	64	64	64	64	64	61	64	64	58	64	59	53	64	54	48	59	50	44	55	46	41	51	43	38	48	40	36
				Exposed	64	64	64	64	64	63	64	64	59	64	62	56	64	59	52	64	56	50	63	53	47	59	50	45	54	46	41	50	42	37	47	38	34	44	36	32	41	33	0	38	0	0
		5:12	22.6	Non-Exposed	64	64	64	64	64	64	64	64	64	64	64	64	64	64	64	64	64	64	64	64	64	64	64	61	64	64	61	64	60	55	64	55	51	64	51	47	60	48	44	57	45	41
				Exposed	64	64	64	64	64	64	64	64	64	64	64	64	64	64	60	64	62	57	64	59	54	64	56	51	64	51	46	59	46	42	55	43	39	51	40	36	48	37	33	45	34	0
		6:12	26.6	Non-Exposed	65	65	65	65	65	65	65	65	65	65	65	65	65	65	65	65	65	65	65	65	65	65	65	65	65	65	61	65	60	55	65	55	51	64	51	47	60	48	43	56	44	40
				Exposed	65	65	65	65	65	65	65	65	65	65	65	64	65	65	60	65	62	57	65	58	54	65	56	51	64	51	46	59	46	42	54	43	39	51	40	36	48	37	33	45	34	0
		7:12	30.3	Non-Exposed	66	66	66	66	66	66	66	66	66	66	66	66	66	66	66	66	66	66	66	66	66	66	66	66	66	66	65	66	66	59	65	62	55	63	58	51	60	54	47	56	50	44
				Exposed	66	66	66	66	66	66	66	66	66	66	66	66	66	66	64	66	66	61	66	66	58	66	63	55	64	57	50	58	53	46	53	49	42	49	45	39	46	42	37	43	39	34
		8:12	33.7	Non-Exposed	66	66	66	66	66	66	66	66	66	66	66	66	66	66	66	66	66	66	66	66	66	66	66	66	66	66	64	66	66	59	66	62	54	64	58	51	60	54	47	55	50	44
				Exposed	66	66	66	66	66	66	66	66	66	66	66	66	66	66	64	66	66	61	66	66	58	66	63	55	63	57	50	58	52	46	53	48	42	49	45	39	46	42	37	43	39	34
		9:12	36.9	Non-Exposed	67	67	67	67	67	67	67	67	67	67	67	67	67	67	67	67	67	67	67	67	67	67	67	67	67	67	64	67	67	59	67	62	54	64	57	50	59	54	47	55	50	44
				Exposed	67	67	67	67	67	67	67	67	60	67	65	57	67	67	64	67	67	60	67	65	57	67	62	55	63	57	50	58	52	46	53	48	42	49	45	39	46	42	37	43	39	34
		10:12	39.8	Non-Exposed	68	68	68	68	68	68	68	68	68	68	68	68	68	68	68	68	68	68	68	68	68	68	68	68	68	68	64	68	67	59	68	62	54	64	57	50	59	53	47	55	50	44
				Exposed	68	68	68	68	68	68	68	68	67	68	68	63	68	68	60	68	68	60	68	65	57	68	62	54	63	57	50	58	52	46	53	48	42	49	45	39	46	42	37	42	39	34
		11:12	42.5	Non-Exposed	69	69	69	69	69	69	69	69	69	69	69	69	69	69	69	69	69	69	69	69	69	69	69	69	69	69	63	69	66	58	68	61	54	63	57	50	59	53	47	55	50	44
				Exposed	69	69	69	69	69	69	69	69	69	69	69	66	69	69	63	69	68	60	69	65	57	69	62	54	63	56	50	57	52	46	53	48	42	49	45	39	45	42	37	42	39	34
		12:12	45	Non-Exposed	70	70	70	70	70	70	70	70	70	70	70	70	70	70	70	70	70	70	70	70	70	70	70	69	70	70	63	70	66	58	68	61	54	63	57	50	59	53	47	55	50	44
				Exposed	70	70	70	70	70	70	70	70	70	70	70	66	70	70	63	70	68	60	70	65	57	69	62	54	62	56	50	57	52	46	53	48	42	49	45	39	45	42	36	42	39	34
	C	Flat	0	Non-Exposed	69	69	69	69	69	69	69	69	66	69	69	62	69	69	58	69	67	55	69	63	52	69	60	50	67	55	45	61	50	42	56	47	38	52	43	36	49	40	33	45	38	0
				Exposed	69	69	57	69	65	54	69	61	50	69	58	48	66	54	45	63	52	43	59	49	41	57	47	39	52	43	35	47	39	32	44	36	0	41	34	0	38	0	0	35	0	0
		1:12	4.8	Non-Exposed	66	66	66	66	66	66	66	66	65	66	66	61	66	66	58	66	66	55	66	63	52	66	60	50	66	55	45	61	50	41	56	46	38	52	43	35	48	40	33	45	38	0
				Exposed	66	66	57	66	65	53	66	61	50	66	57	47	66	54	45	62	51	43	59	49	40	56	47	38	51	43	35	47	39	32	44	36	0	41	34	0	38	0	0	35	0	0
		2:12	9.5	Non-Exposed	64	64	64	64	64	64	64	64	63	64	64	59	64	62	55	64	59	52	64	56	49	63	53	47	57	48	43	53	44	39	49	40	36	46	37	33	43	35	0	40	32	0
				Exposed	64	61	54	64	57	51	64	54	48	60	50	45	56	48	42	54	45	40	51	43	38	49	41	36	45	37	33	42	34	0	39	0	0	36	0	0	34	0	0	0	0	0
		3:12	14.0	Non-Exposed	62	62	62	62	62	62	62	62	62	62	62	58	62	62	55	62	58	52	62	55	49	62	53	47	57	48	43	52	44	39	49	40	36	45	37	33	43	35	0	40	32	0
				Exposed	62	61	54	62	57	51	62	53	47	59	50	45	56	47	42	54	45	40	51	42	38	49	40	36	45	37	33	42	34	0	39	0	0	36	0	0	34	0	0	0	0	0
		4:12	18.4	Non-Exposed	64	64	64	64	64	64	64	64	62	64	64	58	64	62	55	64	58	52	64	55	49	62	52	47	56	48	42	52	43	39	48	40	36	45	37	33	42	34	0	40	32	0
				Exposed	64	61	54	64	57	50	63	53	47	59	50	45	56	47	42	53	45	40	51	42	38	49	40	36	45	37	33	41	34	0	39	0	0	36	0	0	34	0	0	0	0	0
		5:12	22.6	Non-Exposed	64	64	64	64	64	64	64	64	64	64	64	64	64	64	63	64	64	60	64	61	56	64	58	54	64	53	49	61	48	44	57	45	41	53	41	38	50	39	35	47	36	33
				Exposed	64	64	62	64	63	58	64	59	54	64	56	51	64	53	48	63	50	46	60	47	43	57	45	41	53	41	37	49	38	34	45	35	31	42	32	0	40	0	0	37	0	0
		6:12	26.6	Non-Exposed	65	65	65	65	65	65	65	65	65	65	65	65	65	65	63	65	64	59	65	61	56	65	58	53	65	53	48	61	48	44	57	45	41	53	41	38	50	38	35	47	36	33
				Exposed	65	65	62	65	63	58	65	59	54	65	55	51	65	52	48	63	50	45	59	47	43	57	45	41	52	41	37	48	37	34	45	35	0	42	32	0	40	0	0	37	0	0
		7:12	30.3	Non-Exposed	66	66	66	66	66	66	66	66	66	66	66	66	66	66	66	66	66	63	66	66	60	66	66	57	64	60	52	61	55	48	56	51	44	52	47	41	48	44	38	45	41	36
				Exposed	66	66	66	66	66	62	66	66	58	66	63	55	66	59	52	63	56	49	59	53	47	56	51	45	51	46	41	47	43	37	43	39	35	40	37	32	37	34	0	34	32	0
		8:12	33.7	Non-Exposed	66	66	66	66	66	66	66	66	66	66	66	66	66	66	66	66	66	63	66	66	60	66	65	57	65	59	52	61	55	48	56	50	44	51	47	41	48	44	38	45	41	36
				Exposed	66	66	66	66	66	62	66	66	58	66	62	55	66	59	52	62	56	49	59	53	47	56	51	44	51	46	41	47	43	37	43	39	34	40	37	32	37	34	0	34	0	0
		9:12	36.9	Non-Exposed	67	67	67	67	67	67	67	67	67	67	67	67	67	67	66	67	67	63	67	67	60	67	65	57	66	59	52	60	54	48	55	50	44	51	47	41	48	44	38	44	41	36
				Exposed	67	67	65	67	67	61	67	66	58	67	62	54	65	59	52	62	56	49	59	53	47	56	51	44	51	46	41	46	43	37	43	39	34	40	37	32	37	34	0	34	0	0
		10:12	39.8	Non-Exposed	68	68	68	68	68	68	68	68	68	68	68	68	68	68	66	68	68	63	68	68	60	68	65	57	66	59	52	60	54	48	55	50	44	51	47	41	48	44	38	44	41	36
				Exposed	68	68	65	68	68	61	68	65	57	68	62	54	65	59	51	62	56	49	59	53	46	56	51	44	51	46	40	46	42	37	43	39	34	39	36	0	37	34	0	34	0	0
		11:12	42.5	Non-Exposed	69	69	69	69	69	69	69	69	69	69	69	69	69	69	66	69	69	62	69	67	59	69	64	57	65	59	52	60	54	48	55	50	44	51	47	41	47	43	38	44	41	36
				Exposed	69	69	65	69	69	61	69	65	57	69	62	54	65	58	51	61	55	49	58	53	46	55	50	44	50	46	40	46	42	37	43	39	34	39	36	0	37	34	0	34	0	0
		12:12	45	Non-Exposed	70	70	70	70	70	70	70	70	70	70	70	69	70	70	65	70	70	62	70	67	59	70	64	56	65	59	52	60	54	47	55	50	44	51	46	41	47	43	38	44	41	36
				Exposed	70	70	64	70	69	61	70	65	57	68	61	54	65	58	51	61	55	49	58	53	46	55	50	44	50	46	40	46	42	37	42	39	34	39	36	0	37	34	0	34	0	0
	D	Flat	0	Non-Exposed	69	69	67	69	69	63	69	69	59	69	67	55	69	63	52	69	60	50	69	57	47	66	54	45	60	49	41	55	45	37	51	42	35	47	39	32	44	36	0	41	34	0
				Exposed	69	62	52	69	58	48	67	55	45	63	52	43	59	49	40	56	47	38	53	44	36	51	42	35	46	39	0	43	36	0	39	33	0	37	0	0	34	0	0	32	0	0
		1:12	4.8	Non-Exposed	66	66	66	66	66	62	66	66	59	66	66	55	66	63	52	66	60	49	66	57	47	65	54	45	60	49	41	55	45	37	50	42	34	47	39	32	44	36	0	41	34	0
				Exposed	66	62	51	66	58	48	66	55	45	63	52	43	59	49	40	56	46	38	53	44	36	51	42	35	46	39	0	43	35	0	39	33	0	37	0	0	34	0	0	0	0	0
		2:12	9.5	Non-Exposed	64	64	64	64	64	60	64	63	56	64	59	52	64	56	49	63	53	47	59	50	44	56	47	42	52	43	38	48	39	35	44	36	32	41	33	0	39	0	0	36	0	0
				Exposed	64	55	49	61	51	45	57	48	43	54	45	40	51	43	38	49	40	36	47	38	34	45	36	32	41	33	0	38	0	0	35	0	0	33	0	0	0	0	0	0	0	0
		3:12	14.0	Non-Exposed	62	62	62	62	62	59	62	62	56	62	59	52	62	55	49	62	52	47	59	50	44	56	47	42	51	43	38	48	39	35	44	36	32	41	33	0	39	0	0	36	0	0
				Exposed	62	54	49	60	51	45	57	48	43	54	45	40	51	42	38	49	40	36	46	38	34	44	36	32	41	33	0	38	0	0	35	0	0	33	0	0	0	0	0	0	0	0
		4:12	18.4	Non-Exposed	64	64	63	64	64	59	64	62	55	64	58	52	64	55	49	62	52	46	58	49	44	56	47	42	51	43	38	47	39	35	44	36	32	41	33	0	39	0	0	36	0	0
				Exposed	64	54	48	60	51	45	56	48	42	54	45	40	51	42	38	48	40	36	46	38	34	44	36	32	41	33	0	38	0	0	35	0	0	0	0	0	0	0	0	0	0	0
		5:12	22.6	Non-Exposed	64	64	64	64	64	64	64	64	64	64	64	60	64	61	56	64	58	53	64	55	50	64	52	48	60	48	43	56	44	40	52	40	36	48	37	34	45	35	31	43	32	0
				Exposed	64	60	56	64	56	52	64	53	49	63	50	46	60	47	43	57	45	41	54	42	39	52	40	37	48	37	33	44	34	0	41	0	0	38	0	0	36	0	0	34	0	0
		6:12	26.6	Non-Exposed	65	65	65	65	65	65	65	65	63	65	64	60	65	61	56	65	58	53	65	55	50	65	52	48	60	47	43	55	43	40	51	40	36	48	37	34	45	35	0	42	32	0
				Exposed	65	60	55	65	56	52	65	53	48	63	50	46	59	47	43	57	45	41	54	42	39	52	40	37	48	37	33	44	34	0	41	0	0	38	0	0	36	0	0	34	0	0
		7:12	30.3	Non-Exposed	66	66	66	66	66	66	66	66	66	66	66	64	66	66	60	66	65	57	65	62	54	64	59	52	60	54	47	54	49	43	50	46	40	46	42	37	43	39	35	40	37	32
				Exposed	66	66	59	66	64	56	66	60	52	63	56	49	59	53	47	56	51	44	53	48	42	50	46	40	46	42	37	42	39	34	38	36	0	36	33	0	33	0	0	0	0	0
		8:12	33.7	Non-Exposed	66	66	66	66	66	66	66	66	66	66	66	63	66	66	60	66	65	57	66	62	54	64	59	51	59	54	47	54	49	43	50	46	40	46	42	37	43	39	34	40	37	32
				Exposed	66	66	59	66	63	55	66	60	52	62	56	49	59	53	47	56	51	44	53	48	42	50	46	40	46	42	37	42	38	34	38	36	0	36	33	0	33	0	0	0	0	0
		9:12	36.9	Non-Exposed	67	67	67	67	67	67	67	67	67	67	67	63	67	67	60	67	65	57	67	61	54	65	59	51	59	53	47	54	49	43	50	45	40	46	42	37	43	39	34	40	37	32
				Exposed	67	67	59	67	63	55	66	59	52	62	56	49	59	53	47	56	50	44	53	48	42	50	46	40	46	42	37	42	38	34	38	35	0	35	33	0	33	0	0	0	0	0
		10:12	39.8	Non-Exposed	68	68	68	68	68	68	68	68	66	68	68	63	68	68	59	68	64	56	68	61	54	65	58	51	59	53	47	54	49	43	50	45	40	46	42	37	43	39	34	40	37	32
				Exposed	68	67	59	68	63	55	66	59	52	62	56	49	58	53	46	55	50	44	53	48	42	50	46	40	45	42	37	42	38	34	38	35	0	35	33	0	33	0	0	0	0	0
		11:12	42.5	Non-Exposed	69	69	69	69	69	69	69	69	66	69	69	63	69	67	59	69	64	56	68	61	54	65	58	51	59	53	47	54	49	43	49	45	40	46	42	37	43	39	34	40	37	32
				Exposed	69	66	58	69	62	55	65	59	52	62	56	49	58	53	46	55	50	44	52	48	42	50	46	40	45	42	36	41	38	34	38	35	0	35	33	0	33	0	0	0	0	0
		12:12	45	Non-Exposed	70	70	70	70	70	70	70	70	66	70	70	62	70	67	59	70	64	56	68	61	53	64	58	51	59	53	47	54	49	43	49	45	40	46	42	37	43	39	34	40	37	32
				Exposed	70	66	58	69	62	55	65	59	52	61	56	49	58	53	46	55	50	44	52	48	42	50	45	40	45	42	36	41	38	33	38	35	0	35	33	0	33	0	0	0	0	0

Tamarack 2.3 Rail – Gable Flush-Mount on 30 Foot Maximum Mean Roof Height – Portrait – Panel Length = 96 Inches or Less

Ground Snow Load	Exposure Category	Roof Pitch	Roof Angle	Wind Speed (mph)	95			100			105			110			115			120			125			130			140			150			160			170			180			190		
				Roof Area	1	2	3	1	2	3	1	2	3	1	2	3	1	2	3	1	2	3	1	2	3	1	2	3	1	2	3	1	2	3	1	2	3	1	2	3	1	2	3	1	2	3
15	B	Flat	0	Non-Exposed	62	62	62	62	62	62	62	62	62	62	62	62	62	62	62	62	62	62	62	62	62	62	62	62	62	62	56	62	62	51	62	57	47	62	53	44	60	50	41	56	46	38
				Exposed	62	62	62	62	62	62	62	62	62	62	62	59	62	62	56	62	62	53	62	61	50	62	58	48	62	53	43	58	48	40	54	45	37	50	41	34	47	39	32	44	36	0
		1:12	4.8	Non-Exposed	59	59	59	59	59	59	59	59	59	59	59	59	59	59	59	59	59	59	59	59	59	59	59	59	59	59	56	59	59	51	59	57	47	59	53	44	59	49	41	56	46	38
				Exposed	59	59	59	59	59	59	59	59	59	59	59	59	59	59	56	59	59	53	59	59	50	59	57	48	59	52	43	58	48	40	54	45	37	50	41	34	46	39	0	43	36	0
		2:12	9.5	Non-Exposed	57	57	57	57	57	57	57	57	57	57	57	57	57	57	57	57	57	57	57	57	57	57	57	57	57	57	53	57	55	49	57	50	45	55	46	41	52	43	38	49	40	36
				Exposed	57	57	57	57	57	57	57	57	57	57	57	56	57	57	53	57	56	50	57	53	47	57	51	45	55	46	41	51	42	37	47	39	34	44	36	32	41	33	0	39	0	0
		3:12	14.0	Non-Exposed	55	55	55	55	55	55	55	55	55	55	55	55	55	55	55	55	55	55	55	55	55	55	55	55	55	55	53	55	54	48	55	50	45	55	46	41	52	43	38	48	40	36
				Exposed	55	55	55	55	55	55	55	55	55	55	55	55	55	55	53	55	55	50	55	53	47	55	50	45	54	46	41	50	42	37	47	38	34	44	36	32	41	33	0	39	0	0
		4:12	18.4	Non-Exposed	58	58	58	58	58	58	58	58	58	58	58	58	58	58	58	58	58	58	58	58	58	58	58	58	58	58	53	58	54	48	58	50	44	55	46	41	51	43	38	48	40	36
				Exposed	58	58	58	58	58	58	58	58	58	58	58	56	58	58	52	58	56	50	58	53	47	58	50	45	54	46	41	50	42	37	47	38	34	44	36	32	41	33	0	38	0	0
		5:12	22.6	Non-Exposed	58	58	58	58	58	58	58	58	58	58	58	58	58	58	58	58	58	58	58	58	58	58	58	58	58	58	58	58	58	55	58	55	51	58	51	47	58	48	44	57	45	41
				Exposed	58	58	58	58	58	58	58	58	58	58	58	58	58	58	58	58	58	57	58	58	54	58	56	51	58	51	46	58	46	42	55	43	39	51	40	36	48	37	33	45	34	0
		6:12	26.6	Non-Exposed	59	59	59	59	59	59	59	59	59	59	59	59	59	59	59	59	59	59	59	59	59	59	59	59	59	59	59	59	59	55	59	55	51	59	51	47	59	48	43	56	44	40
				Exposed	59	59	59	59	59	59	59	59	59	59	59	59	59	59	59	59	59	57	59	58	54	59	56	51	59	51	46	59	46	42	54	43	39	51	40	36	48	37	33	45	34	0
		7:12	30.3	Non-Exposed	60	60	60	60	60	60	60	60	60	60	60	60	60	60	60	60	60	60	60	60	60	60	60	60	60	60	60	60	60	59	59	59	55	58	58	51	56	54	47	55	50	44
				Exposed	60	60	60	60	60	60	60	60	60	60	60	60	60	60	60	60	60	60	60	60	58	60	60	55	60	57	50	58	53	46	53	49	42	49	45	39	46	42	37	43	39	34
		8:12	33.7	Non-Exposed	61	61	61	61	61	61	61	61	61	61	61	61	61	61	61	61	61	61	61	61	61	61	61	61	61	61	61	61	61	59	60	60	54	59	58	51	57	54	47	55	50	44
				Exposed	61	61	61	61	61	61	61	61	61	61	61	61	61	61	61	61	61	61	61	61	58	61	61	55	61	57	50	58	52	46	53	48	42	49	45	39	46	42	37	43	39	34
		9:12	36.9	Non-Exposed	62	62	62	62	62	62	62	62	62	62	62	62	62	62	62	62	62	62	62	62	62	62	62	62	62	62	62	62	62	59	62	62	54	60	57	50	58	54	47	55	50	44
				Exposed	62	62	62	62	62	62	62	62	62	62	62	62	62	62	62	62	62	60	62	62	57	62	62	55	62	57	50	58	52	46	53	48	42	49	45	39	46	42	37	43	39	34
		10:12	39.8	Non-Exposed	64	64	64	64	64	64	64	64	64	64	64	64	64	64	64	64	64	64	64	64	64	64	64	64	64	64	64	64	64	59	63	62	54	61	57	50	59	53	47	55	50	44
				Exposed	64	64	64	64	64	64	64	64	64	64	64	64	64	64	63	64	64	60	64	64	57	64	62	54	63	57	50	58	52	46	53	48	42	49	45	39	46	42	37	42	39	34
		11:12	42.5	Non-Exposed	65	65	65	65	65	65	65	65	65	65	65	65	65	65	65	65	65	65	65	65	65	65	65	65	65	65	63	65	65	58	64	61	54	63	57	50	59	53	47	55	50	44
				Exposed	65	65	65	65	65	65	65	65	65	65	65	65	65	65	63	65	65	60	65	65	57	65	62	54	63	56	50	57	52	46	53	48	42	49	45	39	45	42	37	42	39	34
		12:12	45	Non-Exposed	66	66	66	66	66	66	66	66	66	66	66	66	66	66	66	66	66	66	66	66	66	66	66	66	66	66	63	66	66	58	66	61	54	63	57	50	59	53	47	55	50	44
				Exposed	66	66	66	66	66	66	66	66	66	66	66	66	66	66	63	66	66	60	66	65	57	66	62	54	62	56	50	57	52	46	53	48	42	49	45	39	45	42	36	42	39	34
	C	Flat	0	Non-Exposed	62	62	62	62	62	62	62	62	62	62	62	62	62	62	58	62	62	55	62	62	52	62	60	50	62	55	45	61	50	42	56	47	38	52	43	36	49	40	33	45	38	0
				Exposed	62	62	57	62	62	54	62	61	50	62	58	48	62	54	45	62	52	43	59	49	41	57	47	39	52	43	35	47	39	32	44	36	0	41	34	0	38	0	0	35	0	0
		1:12	4.8	Non-Exposed	59	59	59	59	59	59	59	59	59	59	59	59	59	59	58	59	59	55	59	59	52	59	59	50	59	55	45	59	50	41	56	46	38	52	43	35	48	40	33	45	38	0
				Exposed	59	59	57	59	59	53	59	59	50	59	57	47	59	54	45	59	51	43	59	49	40	56	47	38	51	43	35	47	39	32	44	36	0	41	34	0	38	0	0	35	0	0
		2:12	9.5	Non-Exposed	57	57	57	57	57	57	57	57	57	57	57	57	57	57	55	57	57	52	57	56	49	57	53	47	57	48	43	53	44	39	49	40	36	46	37	33	43	35	0	40	32	0
				Exposed	57	57	54	57	57	51	57	54	48	57	50	45	56	48	42	54	45	40	51	43	38	49	41	36	45	37	33	42	34	0	39	0	0	36	0	0	34	0	0	0	0	0
		3:12	14.0	Non-Exposed	55	55	55	55	55	55	55	55	55	55	55	55	55	55	55	55	55	52	55	55	49	55	53	47	55	48	43	52	44	39	49	40	36	45	37	33	43	35	0	40	32	0
				Exposed	55	55	54	55	55	51	55	53	47	55	50	45	55	47	42	54	45	40	51	42	38	49	40	36	45	37	33	42	34	0	39	0	0	36	0	0	34	0	0	0	0	0
		4:12	18.4	Non-Exposed	58	58	58	58	58	58	58	58	58	58	58	58	58	58	55	58	58	52	58	55	49	58	52	47	56	48	42	52	43	39	48	40	36	45	37	33	42	34	0	40	32	0
				Exposed	58	58	54	58	57	50	58	53	47	58	50	45	56	47	42	53	45	40	51	42	38	49	40	36	45	37	33	41	34	0	39	0	0	36	0	0	34	0	0	0	0	0
		5:12	22.6	Non-Exposed	58	58	58	58	58	58	58	58	58	58	58	58	58	58	58	58	58	58	58	58	56	58	58	54	58	53	49	58	48	44	57	45	41	53	41	38	50	39	35	47	36	33
				Exposed	58	58	58	58	58	58	58	58	54	58	56	51	58	53	48	58	50	46	58	47	43	57	45	41	53	41	37	49	38	34	45	35	31	42	32	0	40	0	0	37	0	0
		6:12	26.6	Non-Exposed	59	59	59	59	59	59	59	59	59	59	59	59	59	59	59	59	59	59	59	59	56	59	58	53	59	53	48	59	48	44	57	45	41	53	41	38	50	38	35	47	36	33
				Exposed	59	59	59	59	59	58	59	59	54	59	55	51	59	52	48	59	50	45	59	47	43	57	45	41	52	41	37	48	37	34	45	35	0	42	32	0	40	0	0	37	0	0
		7:12	30.3	Non-Exposed	60	60	60	60	60	60	60	60	60	60	60	60	60	60	60	60	60	60	60	60	60	60	60	57	58	58	52	57	55	48	55	51	44	52	47	41	48	44	38	45	41	36
				Exposed	60	60	60	60	60	60	60	60	58	60	60	55	60	59	52	60	56	49	59	53	47	56	51	45	51	46	41	47	43	37	43	39	35	40	37	32	37	34	0	34	32	0
		8:12	33.7	Non-Exposed	61	61	61	61	61	61	61	61	61	61	61	61	61	61	61	61	61	61	61	61	60	61	61	57	59	59	52	58	55	48	56	50	44	51	47	41	48	44	38	45	41	36
				Exposed	61	61	61	61	61	61	61	61	58	61	61	55	61	59	52	61	56	49	59	53	47	56	51	44	51	46	41	47	43	37	43	39	34	40	37	32	37	34	0	34	0	0
		9:12	36.9	Non-Exposed	62	62	62	62	62	62	62	62	62	62	62	62	62	62	62	62	62	62	62	62	60	62	62	57	61	59	52	59	54	48	55	50	44	51	47	41	48	44	38	44	41	36
				Exposed	62	62	62	62	62	61	62	62	58	62	62	54	62	59	52	62	56	49	59	53	47	56	51	44	51	46	41	46	43	37	43	39	34	40	37	32	37	34	0	34	0	0
		10:12	39.8	Non-Exposed	64	64	64	64	64	64	64	64	64	64	64	64	64	64	64	64	64	63	64	64	60	64	64	57	62	59	52	60	54	48	55	50	44	51	47	41	48	44	38	44	41	36
				Exposed	64	64	64	64	64	61	64	64	57	64	62	54	64	59	51	62	56	49	59	53	46	56	51	44	51	46	40	46	42	37	43	39	34	39	36	0	37	34	0	34	0	0
		11:12	42.5	Non-Exposed	65	65	65	65	65	65	65	65	65	65	65	65	65	65	65	65	65	62	65	65	59	65	64	57	63	59	52	60	54	48	55	50	44	51	47	41	47	43	38	44	41	36
				Exposed	65	65	65	65	65	61	65	65	57	65	62	54	65	58	51	61	55	49	58	53	46	55	50	44	50	46	40	46	42	37	43	39	34	39	36	0	37	34	0	34	0	0
		12:12	45	Non-Exposed	66	66	66	66	66	66	66	66	66	66	66	66	66	66	65	66	66	62	66	66	59	66	64	56	65	59	52	60	54	47	55	50	44	51	46	41	47	43	38	44	41	36
				Exposed	66	66	64	66	66	61	66	65	57	66	61	54	65	58	51	61	55	49	58	53	46	55	50	44	50	46	40	46	42	37	42	39	34	39	36	0	37	34	0	34	0	0
	D	Flat	0	Non-Exposed	62	62	62	62	62	62	62	62	59	62	62	55	62	62	52	62	60	50	62	57	47	62	54	45	60	49	41	55	45	37	51	42	35	47	39	32	44	36	0	41	34	0
				Exposed	62	62	52	62	58	48	62	55	45	62	52	43	59	49	40	56	47	38	53	44	36	51	42	35	46	39	0	43	36	0	39	33	0	37	0	0	34	0	0	32	0	0
		1:12	4.8	Non-Exposed	59	59	59	59	59	59	59	59	59	59	59	55	59	59	52	59	59	49	59	57	47	59	54	45	59	49	41	55	45	37	50	42	34	47	39	32	44	36	0	41	34	0
				Exposed	59	59	51	59	58	48	59	55	45	59	52	43	59	49	40	56	46	38	53	44	36	51	42	35	46	39	0	43	35	0	39	33	0	37	0	0	34	0	0	0	0	0
		2:12	9.5	Non-Exposed	57	57	57	57	57	57	57	57	56	57	57	52	57	56	49	57	53	47	57	50	44	56	47	42	52	43	38	48	39	35	44	36	32	41	33	0	39	0	0	36	0	0
				Exposed	57	55	49	57	51	45	57	48	43	54	45	40	51	43	38	49	40	36	47	38	34	45	36	32	41	33	0	38	0	0	35	0	0	33	0	0	0	0	0	0	0	0
		3:12	14.0	Non-Exposed	55	55	55	55	55	55	55	55	55	55	55	52	55	55	49	55	52	47	55	50	44	55	47	42	51	43	38	48	39	35	44	36	32	41	33	0	39	0	0	36	0	0
				Exposed	55	54	49	55	51	45	55	48	43	54	45	40	51	42	38	49	40	36	46	38	34	44	36	32	41	33	0	38	0	0	35	0	0	33	0	0	0	0	0	0	0	0
		4:12	18.4	Non-Exposed	58	58	58	58	58	58	58	58	55	58	58	52	58	55	49	58	52	46	58	49	44	56	47	42	51	43	38	47	39	35	44	36	32	41	33	0	39	0	0	36	0	0
				Exposed	58	54	48	58	51	45	56	48	42	54	45	40	51	42	38	48	40	36	46	38	34	44	36	32	41	33	0	38	0	0	35	0	0	0	0	0	0	0	0	0	0	0
		5:12	22.6	Non-Exposed	58	58	58	58	58	58	58	58	58	58	58	58	58	58	56	58	58	53	58	55	50	58	52	48	58	48	43	56	44	40	52	40	36	48	37	34	45	35	31	43	32	0
				Exposed	58	58	56	58	56	52	58	53	49	58	50	46	58	47	43	57	45	41	54	42	39	52	40	37	48	37	33	44	34	0	41	0	0	38	0	0	36	0	0	34	0	0
		6:12	26.6	Non-Exposed	59	59	59	59	59	59	59	59	59	59	59	59	59	59	56	59	58	53	59	55	50	59	52	48	59	47	43	55	43	40	51	40	36	48	37	34	45	35	0	42	32	0
				Exposed	59	59	55	59	56	52	59	53	48	59	50	46	59	47	43	57	45	41	54	42	39	52	40	37	48	37	33	44	34	0	41	0	0	38	0	0	36	0	0	34	0	0
		7:12	30.3	Non-Exposed	60	60	60	60	60	60	60	60	60	60	60	60	60	60	60	60	60	57	59	59	54	58	58	52	56	54	47	54	49	43	50	46	40	46	42	37	43	39	35	40	37	32
				Exposed	60	60	59	60	60	56	60	60	52	60	56	49	59	53	47	56	51	44	53	48	42	50	46	40	46	42	37	42	39	34	38	36	0	36	33	0	33	0	0	0	0	0
		8:12	33.7	Non-Exposed	61	61	61	61	61	61	61	61	61	61	61	61	61	61	60	61	61	57	60	60	54	59	59	51	57	54	47	54	49	43	50	46	40	46	42	37	43	39	34	40	37	32
				Exposed	61	61	59	61	61	55	61	60	52	61	56	49	59	53	47	56	51	44	53	48	42	50	46	40	46	42	37	42	38	34	38	36	0	36	33	0	33	0	0	0	0	0
		9:12	36.9	Non-Exposed	62	62	62	62	62	62	62	62	62	62	62	62	62	62	60	62	62	57	61	61	54	60	59	51	58	53	47	54	49	43	50	45	40	46	42	37	43	39	34	40	37	32
				Exposed	62	62	59	62	62	55	62	59	52	62	56	49	59	53	47	56	50	44	53	48	42	50	46	40	46	42	37	42	38	34	38	35	0	35	33	0	33	0	0	0	0	0
		10:12	39.8	Non-Exposed	64	64	64	64	64	64	64	64	64	64	64	63	64	64	59	64	64	56	63	61	54	62	58	51	59	53	47	54	49	43	50	45	40	46	42	37	43	39	34	40	37	32
				Exposed	64	64	59	64	63	55	64	59	52	62	56	49	58	53	46	55	50	44	53	48	42	50	46	40	45	42	37	42	38	34	38	35	0	35	33	0	33	0	0	0	0	0
		11:12	42.5	Non-Exposed	65	65	65	65	65	65	65	65	65	65	65	63	65	65	59	65	64	56	64	61	54	63	58	51	59	53	47	54	49	43	49	45	40	46	42	37	43	39	34	40	37	32
				Exposed	65	65	58	65	62	55	65	59	52	62	56	49	58	53	46	55	50	44	52	48	42	50	46	40	45	42	36	41	38	33	38	35	0	35	33	0	33	0	0	0	0	0
		12:12	45	Non-Exposed	66	66	66	66	66	66	66	66	66	66	66	62	66	66	59	66	64	56	65	61	53	64	58	51	59	53	47	54	49	43	49	45	40	46	42	37	43	39	34	40	37	32
				Exposed	66	66	58	66	62	55	65	59	52	61	56	49	58	53	46	55	50	44	52	48	42	50	45	40	45	42	36	41	38	33	38	35	0	35	33	0	33	0	0	0	0	0

Tamarack 2.3 Rail – Gable Flush-Mount on 30 Foot Maximum Mean Roof Height – Portrait – Panel Length = 96 Inches or Less

Ground Snow Load	Exposure Category	Roof Pitch	Roof Angle	Wind Speed (mph)	95			100			105			110			115			120			125			130			140			150			160			170			180			190		
				Roof Area	1	2	3	1	2	3	1	2	3	1	2	3	1	2	3	1	2	3	1	2	3	1	2	3	1	2	3	1	2	3	1	2	3	1	2	3	1	2	3	1	2	3
20	B	Flat	0	Non-Exposed	57	57	57	57	57	57	57	57	57	57	57	57	57	57	57	57	57	57	57	57	57	57	57	57	57	57	56	57	57	51	57	57	47	57	53	44	57	50	41	56	46	38
				Exposed	57	57	57	57	57	57	57	57	57	57	57	57	57	57	56	57	57	53	57	57	50	57	57	48	57	53	43	57	48	40	54	45	37	50	41	34	47	39	32	44	36	0
		1:12	4.8	Non-Exposed	54	54	54	54	54	54	54	54	54	54	54	54	54	54	54	54	54	54	54	54	54	54	54	54	54	54	54	54	54	51	54	54	47	54	53	44	54	49	41	54	46	38
				Exposed	54	54	54	54	54	54	54	54	54	54	54	54	54	54	54	54	54	53	54	54	50	54	54	48	54	52	43	54	48	40	54	45	37	50	41	34	46	39	0	43	36	0
		2:12	9.5	Non-Exposed	52	52	52	52	52	52	52	52	52	52	52	52	52	52	52	52	52	52	52	52	52	52	52	52	52	52	52	52	52	49	52	50	45	52	46	41	52	43	38	49	40	36
				Exposed	52	52	52	52	52	52	52	52	52	52	52	52	52	52	52	52	52	50	52	52	47	52	51	45	52	46	41	51	42	37	47	39	34	44	36	32	41	33	0	39	0	0
		3:12	14.0	Non-Exposed	50	50	50	50	50	50	50	50	50	50	50	50	50	50	50	50	50	50	50	50	50	50	50	50	50	50	50	50	50	48	50	50	45	50	46	41	50	43	38	48	40	36
				Exposed	50	50	50	50	50	50	50	50	50	50	50	50	50	50	50	50	50	50	50	50	47	50	50	45	50	46	41	50	42	37	47	38	34	44	36	32	41	33	0	39	0	0
		4:12	18.4	Non-Exposed	53	53	53	53	53	53	53	53	53	53	53	53	53	53	53	53	53	53	53	53	53	53	53	53	53	53	53	53	53	48	53	50	44	53	46	41	51	43	38	48	40	36
				Exposed	53	53	53	53	53	53	53	53	53	53	53	53	53	53	52	53	53	50	53	53	47	53	50	45	53	46	41	50	42	37	47	38	34	44	36	32	41	33	0	38	0	0
		5:12	22.6	Non-Exposed	54	54	54	54	54	54	54	54	54	54	54	54	54	54	54	54	54	54	54	54	54	54	54	54	54	54	54	54	54	54	54	54	51	54	51	47	54	48	44	54	45	41
				Exposed	54	54	54	54	54	54	54	54	54	54	54	54	54	54	54	54	54	54	54	54	54	54	54	51	54	51	46	54	46	42	54	43	39	51	40	36	48	37	33	45	34	0
		6:12	26.6	Non-Exposed	55	55	55	55	55	55	55	55	55	55	55	55	55	55	55	55	55	55	55	55	55	55	55	55	55	55	55	55	55	55	55	55	51	55	51	47	55	48	43	55	44	40
				Exposed	55	55	55	55	55	55	55	55	55	55	55	55	55	55	55	55	55	55	55	55	54	55	55	51	55	51	46	55	46	42	54	43	39	51	40	36	48	37	33	45	34	0
		7:12	30.3	Non-Exposed	56	56	56	56	56	56	56	56	56	56	56	56	56	56	56	56	56	56	56	56	56	56	56	56	56	56	56	56	56	56	55	55	55	54	54	51	53	53	47	51	50	44
				Exposed	56	56	56	56	56	56	56	56	56	56	56	56	56	56	56	56	56	56	56	56	56	56	56	55	56	56	50	56	53	46	53	49	42	49	45	39	46	42	37	43	39	34
		8:12	33.7	Non-Exposed	57	57	57	57	57	57	57	57	57	57	57	57	57	57	57	57	57	57	57	57	57	57	57	57	57	57	57	57	57	57	56	56	54	55	55	51	54	54	47	52	50	44
				Exposed	57	57	57	57	57	57	57	57	57	57	57	57	57	57	57	57	57	57	57	57	57	57	57	55	57	57	50	57	52	46	53	48	42	49	45	39	46	42	37	43	39	34
		9:12	36.9	Non-Exposed	58	58	58	58	58	58	58	58	58	58	58	58	58	58	58	58	58	58	58	58	58	58	58	58	58	58	58	58	58	58	57	57	54	56	56	50	55	54	47	54	50	44
				Exposed	58	58	58	58	58	58	58	58	58	58	58	58	58	58	58	58	58	58	58	58	57	58	58	55	58	57	50	58	52	46	53	48	42	49	45	39	46	42	37	43	39	34
		10:12	39.8	Non-Exposed	60	60	60	60	60	60	60	60	60	60	60	60	60	60	60	60	60	60	60	60	60	60	60	60	60	60	60	60	60	59	59	59	54	58	57	50	56	53	47	55	50	44
				Exposed	60	60	60	60	60	60	60	60	60	60	60	60	60	60	60	60	60	60	60	60	57	60	60	54	60	57	50	58	52	46	53	48	42	49	45	39	46	42	37	42	39	34
		11:12	42.5	Non-Exposed	61	61	61	61	61	61	61	61	61	61	61	61	61	61	61	61	61	61	61	61	61	61	61	61	61	61	61	61	61	58	60	60	54	59	57	50	58	53	47	55	50	44
				Exposed	61	61	61	61	61	61	61	61	61	61	61	61	61	61	61	61	61	60	61	61	57	61	61	54	61	56	50	57	52	46	53	48	42	49	45	39	45	42	37	42	39	34
		12:12	45	Non-Exposed	63	63	63	63	63	63	63	63	63	63	63	63	63	63	63	63	63	63	63	63	63	63	63	63	63	63	63	63	63	58	62	61	54	60	57	50	59	53	47	55	50	44
				Exposed	63	63	63	63	63	63	63	63	63	63	63	63	63	63	63	63	63	60	63	63	57	63	62	54	62	56	50	57	52	46	53	48	42	49	45	39	45	42	36	42	39	34
	C	Flat	0	Non-Exposed	57	57	57	57	57	57	57	57	57	57	57	57	57	57	57	57	57	55	57	57	52	57	57	50	57	55	45	57	50	42	56	47	38	52	43	36	49	40	33	45	38	0
				Exposed	57	57	57	57	57	54	57	57	50	57	57	48	57	54	45	57	52	43	57	49	41	57	47	39	52	43	35	47	39	32	44	36	0	41	34	0	38	0	0	35	0	0
		1:12	4.8	Non-Exposed	54	54	54	54	54	54	54	54	54	54	54	54	54	54	54	54	54	54	54	54	52	54	54	50	54	54	45	54	50	41	54	46	38	52	43	35	48	40	33	45	38	0
				Exposed	54	54	54	54	54	53	54	54	50	54	54	47	54	54	45	54	51	43	54	49	40	54	47	38	51	43	35	47	39	32	44	36	0	41	34	0	38	0	0	35	0	0
		2:12	9.5	Non-Exposed	52	52	52	52	52	52	52	52	52	52	52	52	52	52	52	52	52	52	52	52	49	52	52	47	52	48	43	52	44	39	49	40	36	46	37	33	43	35	0	40	32	0
				Exposed	52	52	52	52	52	51	52	52	48	52	50	45	52	48	42	52	45	40	51	43	38	49	41	36	45	37	33	42	34	0	39	0	0	36	0	0	34	0	0	0	0	0
		3:12	14.0	Non-Exposed	50	50	50	50	50	50	50	50	50	50	50	50	50	50	50	50	50	50	50	50	49	50	50	47	50	48	43	50	44	39	49	40	36	45	37	33	43	35	0	40	32	0
				Exposed	50	50	50	50	50	50	50	50	47	50	50	45	50	47	42	50	45	40	50	42	38	49	40	36	45	37	33	42	34	0	39	0	0	36	0	0	34	0	0	0	0	0
		4:12	18.4	Non-Exposed	53	53	53	53	53	53	53	53	53	53	53	53	53	53	53	53	53	52	53	53	49	53	52	47	53	48	42	52	43	39	48	40	36	45	37	33	42	34	0	40	32	0
				Exposed	53	53	53	53	53	50	53	53	47	53	50	45	53	47	42	53	45	40	51	42	38	49	40	36	45	37	33	41	34	0	39	0	0	36	0	0	34	0	0	0	0	0
		5:12	22.6	Non-Exposed	54	54	54	54	54	54	54	54	54	54	54	54	54	54	54	54	54	54	54	54	54	54	54	54	54	53	49	54	48	44	54	45	41	53	41	38	50	39	35	47	36	33
				Exposed	54	54	54	54	54	54	54	54	54	54	54	51	54	53	48	54	50	46	54	47	43	54	45	41	53	41	37	49	38	34	45	35	31	42	32	0	40	0	0	37	0	0
		6:12	26.6	Non-Exposed	55	55	55	55	55	55	55	55	55	55	55	55	55	55	55	55	55	55	55	55	55	55	55	53	55	53	48	55	48	44	55	45	41	53	41	38	50	38	35	47	36	33
				Exposed	55	55	55	55	55	55	55	55	54	55	55	51	55	52	48	55	50	45	55	47	43	55	45	41	52	41	37	48	37	34	45	35	0	42	32	0	40	0	0	37	0	0
		7:12	30.3	Non-Exposed	56	56	56	56	56	56	56	56	56	56	56	56	56	56	56	56	56	56	56	56	56	55	55	55	54	54	52	53	53	48	51	51	44	50	47	41	48	44	38	45	41	36
				Exposed	56	56	56	56	56	56	56	56	56	56	56	55	56	56	52	56	56	49	56	53	47	55	51	45	51	46	41	47	43	37	43	39	35	40	37	32	37	34	0	34	32	0
		8:12	33.7	Non-Exposed	57	57	57	57	57	57	57	57	57	57	57	57	57	57	57	57	57	57	57	57	57	57	57	57	55	55	52	54	54	48	52	50	44	51	47	41	48	44	38	45	41	36
				Exposed	57	57	57	57	57	57	57	57	57	57	57	55	57	57	52	57	56	49	57	53	47	56	51	44	51	46	41	47	43	37	43	39	34	40	37	32	37	34	0	34	0	0
		9:12	36.9	Non-Exposed	58	58	58	58	58	58	58	58	58	58	58	58	58	58	58	58	58	58	58	58	58	58	58	57	57	57	52	55	54	48	54	50	44	51	47	41	48	44	38	44	41	36
				Exposed	58	58	58	58	58	58	58	58	58	58	58	54	58	58	52	58	56	49	58	53	47	56	51	44	51	46	41	46	43	37	43	39	34	40	37	32	37	34	0	34	0	0
		10:12	39.8	Non-Exposed	60	60	60	60	60	60	60	60	60	60	60	60	60	60	60	60	60	60	60	60	60	60	60	57	58	58	52	56	54	48	55	50	44	51	47	41	48	44	38	44	41	36
				Exposed	60	60	60	60	60	60	60	60	57	60	60	54	60	59	51	60	56	49	59	53	46	56	51	44	51	46	40	46	42	37	43	39	34	39	36	0	37	34	0	34	0	0
		11:12	42.5	Non-Exposed	61	61	61	61	61	61	61	61	61	61	61	61	61	61	61	61	61	61	61	61	59	61	61	57	60	59	52	58	54	48	55	50	44	51	47	41	47	43	38	44	41	36
				Exposed	61	61	61	61	61	61	61	61	57	61	61	54	61	58	51	61	55	49	58	53	46	55	50	44	50	46	40	46	42	37	43	39	34	39	36	0	37	34	0	34	0	0
		12:12	45	Non-Exposed	63	63	63	63	63	63	63	63	63	63	63	63	63	63	63	63	63	62	63	63	59	63	63	56	61	59	52	59	54	47	55	50	44	51	46	41	47	43	38	44	41	36
				Exposed	63	63	63	63	63	61	63	63	57	63	61	54	63	58	51	61	55	49	58	53	46	55	50	44	50	46	40	46	42	37	42	39	34	39	36	0	37	34	0	34	0	0
	D	Flat	0	Non-Exposed	57	57	57	57	57	57	57	57	57	57	57	55	57	57	52	57	57	50	57	57	47	57	54	45	57	49	41	55	45	37	51	42	35	47	39	32	44	36	0	41	34	0
				Exposed	57	57	52	57	57	48	57	55	45	57	52	43	57	49	40	56	47	38	53	44	36	51	42	35	46	39	0	43	36	0	39	33	0	37	0	0	34	0	0	32	0	0
		1:12	4.8	Non-Exposed	54	54	54	54	54	54	54	54	54	54	54	54	54	54	52	54	54	49	54	54	47	54	54	45	54	49	41	54	45	37	50	42	34	47	39	32	44	36	0	41	34	0
				Exposed	54	54	51	54	54	48	54	54	45	54	52	43	54	49	40	54	46	38	53	44	36	51	42	35	46	39	0	43	35	0	39	33	0	37	0	0	34	0	0	0	0	0
		2:12	9.5	Non-Exposed	52	52	52	52	52	52	52	52	52	52	52	52	52	52	49	52	52	47	52	50	44	52	47	42	52	43	38	48	39	35	44	36	32	41	33	0	39	0	0	36	0	0
				Exposed	52	52	49	52	51	45	52	48	43	52	45	40	51	43	38	49	40	36	47	38	34	45	36	32	41	33	0	38	0	0	35	0	0	33	0	0	0	0	0	0	0	0
		3:12	14.0	Non-Exposed	50	50	50	50	50	50	50	50	50	50	50	50	50	50	49	50	50	47	50	50	44	50	47	42	50	43	38	48	39	35	44	36	32	41	33	0	39	0	0	36	0	0
				Exposed	50	50	49	50	50	45	50	48	43	50	45	40	50	42	38	49	40	36	46	38	34	44	36	32	41	33	0	38	0	0	35	0	0	33	0	0	0	0	0	0	0	0
		4:12	18.4	Non-Exposed	53	53	53	53	53	53	53	53	53	53	53	52	53	53	49	53	52	46	53	49	44	53	47	42	51	43	38	47	39	35	44	36	32	41	33	0	39	0	0	36	0	0
				Exposed	53	53	48	53	51	45	53	48	42	53	45	40	51	42	38	48	40	36	46	38	34	44	36	32	41	33	0	38	0	0	35	0	0	0	0	0	0	0	0	0	0	0
		5:12	22.6	Non-Exposed	54	54	54	54	54	54	54	54	54	54	54	54	54	54	54	54	54	53	54	54	50	54	52	48	54	48	43	54	44	40	52	40	36	48	37	34	45	35	31	43	32	0
				Exposed	54	54	54	54	54	52	54	53	49	54	50	46	54	47	43	54	45	41	54	42	39	52	40	37	48	37	33	44	34	0	41	0	0	38	0	0	36	0	0	34	0	0
		6:12	26.6	Non-Exposed	55	55	55	55	55	55	55	55	55	55	55	55	55	55	55	55	55	53	55	55	50	55	52	48	55	47	43	55	43	40	51	40	36	48	37	34	45	35	0	42	32	0
				Exposed	55	55	55	55	55	52	55	53	48	55	50	46	55	47	43	55	45	41	54	42	39	52	40	37	48	37	33	44	34	0	41	0	0	38	0	0	36	0	0	34	0	0
		7:12	30.3	Non-Exposed	56	56	56	56	56	56	56	56	56	56	56	56	56	56	56	55	55	55	55	55	54	54	54	52	52	52	47	51	49	43	50	46	40	46	42	37	43	39	35	40	37	32
				Exposed	56	56	56	56	56	56	56	56	52	56	56	49	56	53	47	55	51	44	53	48	42	50	46	40	46	42	37	42	39	34	38	36	0	36	33	0	33	0	0	0	0	0
		8:12	33.7	Non-Exposed	57	57	57	57	57	57	57	57	57	57	57	57	57	57	57	57	57	57	56	56	54	55	55	51	54	54	47	52	49	43	50	46	40	46	42	37	43	39	34	40	37	32
				Exposed	57	57	57	57	57	55	57	57	52	57	56	49	57	53	47	56	51	44	53	48	42	50	46	40	46	42	37	42	38	34	38	36	0	36	33	0	33	0	0	0	0	0
		9:12	36.9	Non-Exposed	58	58	58	58	58	58	58	58	58	58	58	58	58	58	58	58	58	57	57	57	54	56	56	51	55	53	47	53	49	43	50	45	40	46	42	37	43	39	34	40	37	32
				Exposed	58	58	58	58	58	55	58	58	52	58	56	49	58	53	47	56	50	44	53	48	42	50	46	40	46	42	37	42	38	34	38	35	0	35	33	0	33	0	0	0	0	0
		10:12	39.8	Non-Exposed	60	60	60	60	60	60	60	60	60	60	60	60	60	60	59	60	60	56	59	59	54	58	58	51	56	53	47	54	49	43	50	45	40	46	42	37	43	39	34	40	37	32
				Exposed	60	60	59	60	60	55	60	59	52	60	56	49	58	53	46	55	50	44	53	48	42	50	46	40	45	42	37	42	38	34	38	35	0	35	33	0	33	0	0	0	0	0
		11:12	42.5	Non-Exposed	61	61	61	61	61	61	61	61	61	61	61	61	61	61	59	61	61	56	60	60	54	59	58	51	57	53	47	54	49	43	49	45	40	46	42	37	43	39	34	40	37	32
				Exposed	61	61	58	61	61	55	61	59	52	61	56	49	58	53	46	55	50	44	52	48	42	50	46	40	45	42	36	41	38	34	38	35	0	35	33	0	33	0	0	0	0	0
		12:12	45	Non-Exposed	63	63	63	63	63	63	63	63	63	63	63	62	63	63	59	63	63	56	62	61	53	61	58	51	59	53	47	54	49	43	49	45	40	46	42	37	43	39	34	40	37	32
				Exposed	63	63	58	63	62	55	63	59	52	61	56	49	58	53	46	55	50	44	52	48	42	50	45	40	45	42	36	41	38	33	38	35	0	35	33	0	33	0	0	0	0	0

Tamarack 2.3 Rail – Gable Flush-Mount on 30 Foot Maximum Mean Roof Height – Portrait – Panel Length = 96 Inches or Less

Ground Snow Load	Exposure Category	Roof Pitch	Roof Angle	Wind Speed (mph)	95			100			105			110			115			120			125			130			140			150			160			170			180			190		
				Roof Area	1	2	3	1	2	3	1	2	3	1	2	3	1	2	3	1	2	3	1	2	3	1	2	3	1	2	3	1	2	3	1	2	3	1	2	3	1	2	3	1	2	3
25	B	Flat	0	Non-Exposed	56	56	56	56	56	56	56	56	56	56	56	56	56	56	56	56	56	56	56	56	56	56	56	56	56	56	56	56	56	51	56	56	47	56	53	44	56	50	41	56	46	38
				Exposed	56	56	56	56	56	56	56	56	56	56	56	56	56	56	56	56	56	53	56	56	50	56	56	48	56	53	43	56	48	40	54	45	37	50	41	34	47	39	32	44	36	0
		1:12	4.8	Non-Exposed	54	54	54	54	54	54	54	54	54	54	54	54	54	54	54	54	54	54	54	54	54	54	54	54	54	54	54	54	54	51	54	54	47	54	53	44	54	49	41	54	46	38
				Exposed	54	54	54	54	54	54	54	54	54	54	54	54	54	54	54	54	54	53	54	54	50	54	54	48	54	52	43	54	48	40	54	45	37	50	41	34	46	39	0	43	36	0
		2:12	9.5	Non-Exposed	51	51	51	51	51	51	51	51	51	51	51	51	51	51	51	51	51	51	51	51	51	51	51	51	51	51	51	51	51	49	51	50	45	51	46	41	51	43	38	49	40	36
				Exposed	51	51	51	51	51	51	51	51	51	51	51	51	51	51	51	51	51	50	51	51	47	51	51	45	51	46	41	51	42	37	47	39	34	44	36	32	41	33	0	39	0	0
		3:12	14.0	Non-Exposed	49	49	49	49	49	49	49	49	49	49	49	49	49	49	49	49	49	49	49	49	49	49	49	49	49	49	49	49	49	48	49	49	45	49	46	41	49	43	38	48	40	36
				Exposed	49	49	49	49	49	49	49	49	49	49	49	49	49	49	49	49	49	49	49	49	47	49	49	45	49	46	41	49	42	37	47	38	34	44	36	32	41	33	0	39	0	0
		4:12	18.4	Non-Exposed	49	49	49	49	49	49	49	49	49	49	49	49	49	49	49	49	49	49	49	49	49	49	49	49	49	49	49	49	49	48	49	49	44	49	46	41	49	43	38	48	40	36
				Exposed	49	49	49	49	49	49	49	49	49	49	49	49	49	49	49	49	49	49	49	49	47	49	49	45	49	46	41	49	42	37	47	38	34	44	36	32	41	33	0	38	0	0
		5:12	22.6	Non-Exposed	50	50	50	50	50	50	50	50	50	50	50	50	50	50	50	50	50	50	50	50	50	50	50	50	50	50	50	50	50	50	50	50	50	50	50	47	50	48	44	50	45	41
				Exposed	50	50	50	50	50	50	50	50	50	50	50	50	50	50	50	50	50	50	50	50	50	50	50	50	50	50	46	50	46	42	50	43	39	50	40	36	48	37	33	45	34	0
		6:12	26.6	Non-Exposed	51	51	51	51	51	51	51	51	51	51	51	51	51	51	51	51	51	51	51	51	51	51	51	51	51	51	51	51	51	51	51	51	51	51	51	47	51	48	43	51	44	40
				Exposed	51	51	51	51	51	51	51	51	51	51	51	51	51	51	51	51	51	51	51	51	51	51	51	51	51	51	46	51	46	42	51	43	39	51	40	36	48	37	33	45	34	0
		7:12	30.3	Non-Exposed	52	52	52	52	52	52	52	52	52	52	52	52	52	52	52	52	52	52	52	52	52	52	52	52	52	52	52	52	52	52	51	51	51	50	50	50	49	49	47	48	48	44
				Exposed	52	52	52	52	52	52	52	52	52	52	52	52	52	52	52	52	52	52	52	52	50	52	52	50	52	52	50	52	52	46	51	49	42	49	45	39	46	42	37	43	39	34
		8:12	33.7	Non-Exposed	54	54	54	54	54	54	54	54	54	54	54	54	54	54	54	54	54	54	54	54	54	54	54	54	54	54	54	54	54	54	53	53	53	52	52	51	51	51	47	50	50	44
				Exposed	54	54	54	54	54	54	54	54	54	54	54	54	54	54	54	54	54	54	54	54	54	54	54	54	54	54	50	54	52	46	53	48	42	49	45	39	46	42	37	43	39	34
		9:12	36.9	Non-Exposed	55	55	55	55	55	55	55	55	55	55	55	55	55	55	55	55	55	55	55	55	55	55	55	55	55	55	55	55	55	55	54	54	54	53	53	50	52	52	47	51	50	44
				Exposed	55	55	55	55	55	55	55	55	55	55	55	55	55	55	55	55	55	55	55	55	55	55	55	55	55	55	50	55	52	46	53	48	42	49	45	39	46	42	37	43	39	34
		10:12	39.8	Non-Exposed	57	57	57	57	57	57	57	57	57	57	57	57	57	57	57	57	57	57	57	57	57	57	57	57	57	57	57	57	57	57	56	56	54	54	54	50	53	53	47	52	50	44
				Exposed	57	57	57	57	57	57	57	57	57	57	57	57	57	57	57	57	57	57	57	57	57	57	57	54	57	57	50	57	52	46	53	48	42	49	45	39	46	42	37	42	39	34
		11:12	42.5	Non-Exposed	58	58	58	58	58	58	58	58	58	58	58	58	58	58	58	58	58	58	58	58	58	58	58	58	58	58	58	58	58	58	57	57	54	56	56	50	55	53	47	53	50	44
				Exposed	58	58	58	58	58	58	58	58	58	58	58	58	58	58	58	58	58	58	58	58	57	58	58	54	58	56	50	57	52	46	53	48	42	49	45	39	45	42	37	42	39	34
		12:12	45	Non-Exposed	60	60	60	60	60	60	60	60	60	60	60	60	60	60	60	60	60	60	60	60	60	60	60	60	60	60	60	60	60	58	59	59	54	58	57	50	56	53	47	55	50	44
				Exposed	60	60	60	60	60	60	60	60	60	60	60	60	60	60	60	60	60	60	60	60	57	60	60	54	60	56	50	57	52	46	53	48	42	49	45	39	45	42	36	42	39	34
	C	Flat	0	Non-Exposed	56	56	56	56	56	56	56	56	56	56	56	56	56	56	56	56	56	55	56	56	52	56	56	50	56	55	45	56	50	42	56	47	38	52	43	36	49	40	33	45	38	0
				Exposed	56	56	56	56	56	54	56	56	50	56	56	48	56	54	45	56	52	43	56	49	41	56	47	39	52	43	35	47	39	32	44	36	0	41	34	0	38	0	0	35	0	0
		1:12	4.8	Non-Exposed	54	54	54	54	54	54	54	54	54	54	54	54	54	54	54	54	54	54	54	54	52	54	54	50	54	54	45	54	50	41	54	46	38	52	43	35	48	40	33	45	38	0
				Exposed	54	54	54	54	54	53	54	54	50	54	54	47	54	54	45	54	51	43	54	49	40	54	47	38	51	43	35	47	39	32	44	36	0	41	34	0	38	0	0	35	0	0
		2:12	9.5	Non-Exposed	51	51	51	51	51	51	51	51	51	51	51	51	51	51	51	51	51	51	51	51	49	51	51	47	51	48	43	51	44	39	49	40	36	46	37	33	43	35	0	40	32	0
				Exposed	51	51	51	51	51	51	51	51	48	51	50	45	51	48	42	51	45	40	51	43	38	49	41	36	45	37	33	42	34	0	39	0	0	36	0	0	34	0	0	0	0	0
		3:12	14.0	Non-Exposed	49	49	49	49	49	49	49	49	49	49	49	49	49	49	49	49	49	49	49	49	49	49	49	47	49	48	43	49	44	39	49	40	36	45	37	33	43	35	0	40	32	0
				Exposed	49	49	49	49	49	49	49	49	47	49	49	45	49	47	42	49	45	40	49	42	38	49	40	36	45	37	33	42	34	0	39	0	0	36	0	0	34	0	0	0	0	0
		4:12	18.4	Non-Exposed	49	49	49	49	49	49	49	49	49	49	49	49	49	49	49	49	49	49	49	49	49	49	49	47	49	48	42	49	43	39	48	40	36	45	37	33	42	34	0	40	32	0
				Exposed	49	49	49	49	49	49	49	49	47	49	49	45	49	47	42	49	45	40	49	42	38	49	40	36	45	37	33	41	34	0	39	0	0	36	0	0	34	0	0	0	0	0
		5:12	22.6	Non-Exposed	50	50	50	50	50	50	50	50	50	50	50	50	50	50	50	50	50	50	50	50	50	50	50	50	50	50	49	50	48	44	50	45	41	50	41	38	49	39	35	47	36	33
				Exposed	50	50	50	50	50	50	50	50	50	50	50	50	50	50	48	50	50	46	50	47	43	50	45	41	50	41	37	49	38	34	45	35	31	42	32	0	40	0	0	37	0	0
		6:12	26.6	Non-Exposed	51	51	51	51	51	51	51	51	51	51	51	51	51	51	51	51	51	51	51	51	51	51	51	51	51	51	48	51	48	44	51	45	41	51	41	38	50	38	35	47	36	33
				Exposed	51	51	51	51	51	51	51	51	51	51	51	51	51	51	48	51	50	45	51	47	43	51	45	41	51	41	37	48	37	34	45	35	0	42	32	0	40	0	0	37	0	0
		7:12	30.3	Non-Exposed	52	52	52	52	52	52	52	52	52	52	52	52	52	52	52	52	52	52	52	52	52	52	52	52	51	51	51	50	50	48	48	48	44	47	47	41	46	44	38	45	41	36
				Exposed	52	52	52	52	52	52	52	52	52	52	52	49	52	52	47	52	51	45	51	46	41	47	43	37	43	39	35	40	37	32	37	34	0	34	32	0	34	0	0	34	0	0
		8:12	33.7	Non-Exposed	54	54	54	54	54	54	54	54	54	54	54	54	54	54	54	54	54	54	54	54	54	53	53	53	52	52	52	51	51	48	50	50	44	48	47	41	47	44	38	45	41	36
				Exposed	54	54	54	54	54	54	54	54	54	54	54	54	54	54	52	54	54	49	54	53	47	53	51	44	51	46	41	47	43	37	43	39	34	40	37	32	37	34	0	34	0	0
		9:12	36.9	Non-Exposed	55	55	55	55	55	55	55	55	55	55	55	55	55	55	55	55	55	55	55	55	55	55	55	55	53	53	52	52	52	48	51	50	44	49	47	41	48	44	38	44	41	36
				Exposed	55	55	55	55	55	55	55	55	55	55	55	54	55	55	52	55	55	49	55	53	47	55	51	44	51	46	41	46	43	37	43	39	34	40	37	32	37	34	0	34	0	0
		10:12	39.8	Non-Exposed	57	57	57	57	57	57	57	57	57	57	57	57	57	57	57	57	57	57	57	57	57	56	56	56	55	55	52	54	54	48	52	50	44	51	47	41	48	44	38	44	41	36
				Exposed	57	57	57	57	57	57	57	57	57	57	57	54	57	57	51	57	56	49	57	53	46	56	51	44	51	46	40	46	42	37	43	39	34	39	36	0	37	34	0	34	0	0
		11:12	42.5	Non-Exposed	58	58	58	58	58	58	58	58	58	58	58	58	58	58	58	58	58	58	58	58	58	58	58	57	57	57	52	55	54	48	54	50	44	51	47	41	47	43	38	44	41	36
				Exposed	58	58	58	58	58	58	58	58	57	58	58	54	58	58	51	58	55	49	58	53	46	55	50	44	50	46	40	46	42	37	43	39	34	39	36	0	37	34	0	34	0	0
		12:12	45	Non-Exposed	60	60	60	60	60	60	60	60	60	60	60	60	60	60	60	60	60	60	60	60	59	60	60	56	58	58	52	57	54	47	55	50	44	51	46	41	47	43	38	44	41	36
				Exposed	60	60	60	60	60	60	60	60	57	60	60	54	60	58	51	60	55	49	58	53	46	55	50	44	50	46	40	46	42	37	42	39	34	39	36	0	37	34	0	34	0	0
	D	Flat	0	Non-Exposed	56	56	56	56	56	56	56	56	56	56	56	55	56	56	52	56	56	50	56	56	47	56	54	45	56	49	41	55	45	37	51	42	35	47	39	32	44	36	0	41	34	0
				Exposed	56	56	52	56	56	48	56	55	45	56	52	43	56	49	40	56	47	38	53	44	36	51	42	35	46	39	0	43	36	0	39	33	0	37	0	0	34	0	0	32	0	0
		1:12	4.8	Non-Exposed	54	54	54	54	54	54	54	54	54	54	54	54	54	54	52	54	54	49	54	54	47	54	54	45	54	49	41	54	45	37	50	42	34	47	39	32	44	36	0	41	34	0
				Exposed	54	54	51	54	54	48	54	54	45	54	52	43	54	49	40	54	46	38	53	44	36	51	42	35	46	39	0	43	35	0	39	33	0	37	0	0	34	0	0	0	0	0
		2:12	9.5	Non-Exposed	51	51	51	51	51	51	51	51	51	51	51	51	51	51	49	51	51	47	51	50	44	51	47	42	51	43	38	48	39	35	44	36	32	41	33	0	39	0	0	36	0	0
				Exposed	51	51	49	51	51	45	51	48	43	51	45	40	51	43	38	49	40	36	47	38	34	45	36	32	41	33	0	38	0	0	35	0	0	33	0	0	0	0	0	0	0	0
		3:12	14.0	Non-Exposed	49	49	49	49	49	49	49	49	49	49	49	49	49	49	49	49	49	47	49	49	44	49	47	42	49	43	38	48	39	35	44	36	32	41	33	0	39	0	0	36	0	0
				Exposed	49	49	49	49	49	45	49	48	43	49	45	40	49	42	38	49	40	36	46	38	34	44	36	32	41	33	0	38	0	0	35	0	0	33	0	0	0	0	0	0	0	0
		4:12	18.4	Non-Exposed	49	49	49	49	49	49	49	49	49	49	49	49	49	49	49	49	49	46	49	49	44	49	47	42	49	43	38	47	39	35	44	36	32	41	33	0	39	0	0	36	0	0
				Exposed	49	49	48	49	49	45	49	48	42	49	45	40	49	42	38	48	40	36	46	38	34	44	36	32	41	33	0	38	0	0	35	0	0	0	0	0	0	0	0	0	0	0
		5:12	22.6	Non-Exposed	50	50	50	50	50	50	50	50	50	50	50	50	50	50	50	50	50	50	50	50	50	50	50	48	50	48	43	50	44	40	49	40	36	48	37	34	45	35	31	43	32	0
				Exposed	50	50	50	50	50	50	50	50	49	50	50	46	50	47	43	50	45	41	50	42	39	50	40	37	48	37	33	44	34	0	41	0	0	38	0	0	36	0	0	34	0	0
		6:12	26.6	Non-Exposed	51	51	51	51	51	51	51	51	51	51	51	51	51	51	51	51	51	51	51	51	50	51	51	48	51	47	43	51	43	40	50	40	36	48	37	34	45	35	0	42	32	0
				Exposed	51	51	51	51	51	51	51	51	48	51	50	46	51	47	43	51	45	41	51	42	39	51	40	37	48	37	33	44	34	0	41	0	0	38	0	0	36	0	0	34	0	0
		7:12	30.3	Non-Exposed	52	52	52	52	52	52	52	52	52	52	52	52	52	52	52	52	52	52	51	51	51	51	51	51	49	49	47	48	48	43	47	46	40	46	42	37	43	39	35	40	37	32
				Exposed	52	52	52	52	52	52	52	52	52	52	52	49	52	52	47	52	51	44	51	48	42	50	46	40	46	42	37	42	39	34	38	36	0	36	33	0	33	0	0	0	0	0
		8:12	33.7	Non-Exposed	54	54	54	54	54	54	54	54	54	54	54	54	54	54	54	53	53	53	52	52	52	52	52	51	51	51	47	49	49	43	48	46	40	46	42	37	43	39	34	40	37	32
				Exposed	54	54	54	54	54	54	54	54	52	54	54	49	54	53	47	53	51	44	52	48	42	50	46	40	46	42	37	42	38	34	38	36	0	36	33	0	33	0	0	0	0	0
		9:12	36.9	Non-Exposed	55	55	55	55	55	55	55	55	55	55	55	55	55	55	55	55	55	55	54	54	54	53	53	51	52	52	47	50	49	43	49	45	40	46	42	37	43	39	34	40	37	32
				Exposed	55	55	55	55	55	55	55	52	55	55	55	49	55	53	47	55	50	44	53	48	42	50	46	40	46	42	37	42	38	34	38	35	0	35	33	0	33	0	0	0	0	0
		10:12	39.8	Non-Exposed	57	57	57	57	57	57	57	57	57	57	57	57	57	57	57	56	56	56	56	56	54	55	55	51	53	53	47	52	49	43	50	45	40	46	42	37	43	39	34	40	37	32
				Exposed	57	57	57	57	57	55	57	57	52	57	56	49	57	53	46	55	50	44	53	48	42	50	46	40	45	42	37	42	38	34	38	35	0	35	33	0	33	0	0	0	0	0
		11:12	42.5	Non-Exposed	58	58	58	58	58	58	58	58	58	58	58	58	58	58	58	58	58	56	57	57	54	56	56	51	55	53	47	53	49	43	49	45	40	46	42	37	43	39	34	40	37	32
				Exposed	58	58	58	58	58	55	58	58	52	58	56	49	58	53	46	55	50	44	52	48	42	50	46	40	45	42	36	41	38	34	38	35	0	35	33	0	33	0	0	0	0	0
		12:12	45	Non-Exposed	60	60	60	60	60	60	60	60	60	60	60	60	60	60	59	60	60	56	59	59	53	58	58	51	56	53	47	54	49	43	49	45	40	46	42	37	43	39	34	40	37	32
				Exposed	60	60	58	60	60	55	60	59	52	60	56	49	58	53	46	55	50	44	52	48	42	50	45	40	45	42	36	41	38	33	38	35	0	35	33	0	33	0	0	0	0	0

Tamarack 2.3 Rail – Gable Flush-Mount on 30 Foot Maximum Mean Roof Height – Portrait – Panel Length = 96 Inches or Less

Ground Snow Load	Exposure Category	Roof Pitch	Roof Angle	Wind Speed (mph)	95			100			105			110			115			120			125			130			140			150			160			170			180			190		
				Roof Area	1	2	3	1	2	3	1	2	3	1	2	3	1	2	3	1	2	3	1	2	3	1	2	3	1	2	3	1	2	3	1	2	3	1	2	3	1	2	3	1	2	3
30	B	Flat	0	Non-Exposed	53	53	53	53	53	53	53	53	53	53	53	53	53	53	53	53	53	53	53	53	53	53	53	53	53	53	53	53	53	51	53	53	47	53	53	44	53	50	41	53	46	38
				Exposed	53	53	53	53	53	53	53	53	53	53	53	53	53	53	53	53	53	53	53	53	50	53	53	48	53	53	43	53	48	40	53	45	37	50	41	34	47	39	32	44	36	0
		1:12	4.8	Non-Exposed	50	50	50	50	50	50	50	50	50	50	50	50	50	50	50	50	50	50	50	50	50	50	50	50	50	50	50	50	50	50	50	50	47	50	50	44	50	49	41	50	46	38
				Exposed	50	50	50	50	50	50	50	50	50	50	50	50	50	50	50	50	50	50	50	50	50	50	50	48	50	50	43	50	48	40	50	45	37	50	41	34	46	39	0	43	36	0
		2:12	9.5	Non-Exposed	47	47	47	47	47	47	47	47	47	47	47	47	47	47	47	47	47	47	47	47	47	47	47	47	47	47	47	47	47	47	47	47	45	47	46	41	47	43	38	47	40	36
				Exposed	47	47	47	47	47	47	47	47	47	47	47	47	47	47	47	47	47	47	47	47	47	47	47	45	47	46	41	47	42	37	47	39	34	44	36	32	41	33	0	39	0	0
		3:12	14.0	Non-Exposed	45	45	45	45	45	45	45	45	45	45	45	45	45	45	45	45	45	45	45	45	45	45	45	45	45	45	45	45	45	45	45	45	45	45	45	41	45	43	38	45	40	36
				Exposed	45	45	45	45	45	45	45	45	45	45	45	45	45	45	45	45	45	45	45	45	41	45	45	45	45	45	41	45	42	37	45	38	34	44	36	32	41	33	0	39	0	0
		4:12	18.4	Non-Exposed	45	45	45	45	45	45	45	45	45	45	45	45	45	45	45	45	45	45	45	45	45	45	45	45	45	45	45	45	45	45	45	45	44	45	45	41	45	43	38	45	40	36
				Exposed	45	45	45	45	45	45	45	45	45	45	45	45	45	45	45	45	45	45	45	45	41	45	45	45	45	45	41	45	42	37	45	38	34	44	36	32	41	33	0	38	0	0
		5:12	22.6	Non-Exposed	46	46	46	46	46	46	46	46	46	46	46	46	46	46	46	46	46	46	46	46	46	46	46	46	46	46	46	46	46	46	46	46	46	46	46	46	46	45	41	46	44	40
				Exposed	46	46	46	46	46	46	46	46	46	46	46	46	46	46	46	46	46	46	46	46	46	46	46	46	46	46	46	46	46	42	46	43	39	46	40	36	46	37	33	45	34	0
		6:12	26.6	Non-Exposed	47	47	47	47	47	47	47	47	47	47	47	47	47	47	47	47	47	47	47	47	47	47	47	47	47	47	47	47	47	47	47	47	47	47	47	47	47	43	38	47	40	36
				Exposed	47	47	47	47	47	47	47	47	47	47	47	47	47	47	47	47	47	47	47	47	46	47	46	42	47	46	42	47	43	39	47	40	36	47	37	33	47	33	0	39	0	0
		7:12	30.3	Non-Exposed	49	49	49	49	49	49	49	49	49	49	49	49	49	49	49	49	49	49	49	49	49	49	49	49	49	49	49	49	49	49	48	48	48	48	48	48	47	47	47	46	44	44
				Exposed	49	49	49	49	49	49	49	49	49	49	49	49	49	49	49	49	49	49	49	49	49	49	49	49	49	49	49	49	49	46	48	48	42	48	45	39	46	42	37	43	39	34
		8:12	33.7	Non-Exposed	51	51	51	51	51	51	51	51	51	51	51	51	51	51	51	51	51	51	51	51	51	51	51	51	51	51	51	51	51	51	50	50	50	49	49	49	48	48	47	47	47	44
				Exposed	51	51	51	51	51	51	51	51	51	51	51	51	51	51	51	51	51	51	51	51	50	51	51	50	51	51	50	51	51	46	50	48	42	49	45	39	46	42	37	43	39	34
		9:12	36.9	Non-Exposed	52	52	52	52	52	52	52	52	52	52	52	52	52	52	52	52	52	52	52	52	52	52	52	52	52	52	52	52	52	52	51	51	50	50	50	50	49	49	47	48	48	44
				Exposed	52	52	52	52	52	52	52	52	52	52	52	52	52	52	52	52	52	52	52	52	52	52	52	52	52	52	52	52	52	46	51	48	42	49	45	39	46	42	37	43	39	34
		10:12	39.8	Non-Exposed	54	54	54	54	54	54	54	54	54	54	54	54	54	54	54	54	54	54	54	54	54	54	54	54	54	54	54	54	54	54	53	53	53	52	52	50	51	51	47	50	50	44
				Exposed	54	54	54	54	54	54	54	54	54	54	54	54	54	54	54	54	54	54	54	54	54	54	54	54	54	54	50	54	52	46	53	48	42	49	45	39	46	42	37	42	39	34
		11:12	42.5	Non-Exposed	56	56	56	56	56	56	56	56	56	56	56	56	56	56	56	56	56	56	56	56	56	56	56	56	56	56	56	56	56	54	55	55	54	53	53	50	52	52	47	51	50	44
				Exposed	56	56	56	56	56	56	56	56	56	56	56	56	56	56	56	56	56	56	56	56	56	56	56	54	56	56	50	56	52	46	53	48	42	49	45	39	45	42	37	42	39	34
		12:12	45	Non-Exposed	57	57	57	57	57	57	57	57	57	57	57	57	57	57	57	57	57	57	57	57	57	57	57	57	57	57	57	57	57	57	56	56	54	55	55	50	54	53	47	53	50	44
				Exposed	57	57	57	57	57	57	57	57	57	57	57	57	57	57	57	57	57	57	57	57	57	57	57	54	57	56	50	57	52	46	53	48	42	49	45	39	45	42	36	42	39	34
	C	Flat	0	Non-Exposed	53	53	53	53	53	53	53	53	53	53	53	53	53	53	53	53	53	53	53	53	52	53	53	50	53	53	45	53	50	42	53	47	38	52	43	36	49	40	33	45	38	0
				Exposed	53	53	53	53	53	53	53	53	50	53	53	48	53	53	45	53	52	43	53	49	41	53	47	39	52	43	35	47	39	32	44	36	0	41	34	0	38	0	0	35	0	0
		1:12	4.8	Non-Exposed	50	50	50	50	50	50	50	50	50	50	50	50	50	50	50	50	50	50	50	50	50	50	50	50	50	50	45	50	50	41	50	46	38	50	43	35	48	40	33	45	38	0
				Exposed	50	50	50	50	50	50	50	50	50	50	50	47	50	50	45	50	50	43	50	49	40	50	47	38	50	43	35	47	39	32	44	36	0	41	34	0	38	0	0	35	0	0
		2:12	9.5	Non-Exposed	47	47	47	47	47	47	47	47	47	47	47	47	47	47	47	47	47	47	47	47	47	47	47	47	47	47	43	47	44	39	47	40	36	46	37	33	43	35	0	40	32	0
				Exposed	47	47	47	47	47	47	47	47	47	47	47	45	47	47	42	47	45	40	47	43	38	47	41	36	45	37	33	42	34	0	39	0	0	36	0	0	34	0	0	0	0	0
		3:12	14.0	Non-Exposed	45	45	45	45	45	45	45	45	45	45	45	45	45	45	45	45	45	45	45	45	45	45	45	45	45	45	43	45	44	39	45	40	36	45	37	33	43	35	0	40	32	0
				Exposed	45	45	45	45	45	45	45	45	45	45	45	45	45	45	42	45	45	40	45	42	38	45	40	36	45	37	33	42	34	0	39	0	0	36	0	0	34	0	0	0	0	0
		4:12	18.4	Non-Exposed	45	45	45	45	45	45	45	45	45	45	45	45	45	45	45	45	45	45	45	45	45	45	45	45	45	45	42	45	43	39	45	40	36	45	37	33	42	34	0	40	32	0
				Exposed	45	45	45	45	45	45	45	45	45	45	45	45	45	45	42	45	45	40	45	42	38	45	40	36	45	37	33	41	34	0	39	0	0	36	0	0	34	0	0	0	0	0
		5:12	22.6	Non-Exposed	46	46	46	46	46	46	46	46	46	46	46	46	46	46	46	46	46	46	46	46	46	46	46	46	46	46	46	46	46	44	46	45	41	46	41	38	46	39	35	45	36	33
				Exposed	46	46	46	46	46	46	46	46	46	46	46	46	46	46	46	46	46	46	46	46	43	46	45	41	46	41	37	46	38	34	45	35	31	42	32	0	40	0	0	37	0	0
		6:12	26.6	Non-Exposed	47	47	47	47	47	47	47	47	47	47	47	47	47	47	47	47	47	47	47	47	47	47	47	47	47	47	47	47	47	44	47	45	41	47	41	38	47	38	35	46	36	33
				Exposed	47	47	47	47	47	47	47	47	47	47	47	47	47	47	47	47	47	45	47	47	43	47	45	41	47	41	37	47	37	34	45	35	0	42	32	0	40	0	0	37	0	0
		7:12	30.3	Non-Exposed	49	49	49	49	49	49	49	49	49	49	49	49	49	49	49	49	49	49	49	49	49	49	49	49	48	48	48	47	47	47	46	46	44	45	45	41	44	44	38	43	41	36
				Exposed	49	49	49	49	49	49	49	49	49	49	49	49	49	49	49	49	49	49	49	49	47	49	49	45	48	46	41	47	43	37	43	39	35	40	37	32	37	34	0	34	32	0
		8:12	33.7	Non-Exposed	51	51	51	51	51	51	51	51	51	51	51	51	51	51	51	51	51	51	51	51	51	50	50	50	49	49	49	48	48	48	47	47	44	46	46	41	45	44	38	44	41	36
				Exposed	51	51	51	51	51	51	51	51	51	51	51	51	51	51	51	51	51	49	51	51	47	50	50	44	49	46	41	47	43	37	43	39	34	40	37	32	37	34	0	34	0	0
		9:12	36.9	Non-Exposed	52	52	52	52	52	52	52	52	52	52	52	52	52	52	52	52	52	52	52	52	52	52	52	52	51	51	51	50	50	48	48	48	44	47	47	41	46	44	38	44	41	36
				Exposed	52	52	52	52	52	52	52	52	52	52	52	52	52	52	52	52	52	49	52	52	47	52	51	44	51	46	41	46	43	37	43	39	34	40	37	32	37	34	0	34	0	0
		10:12	39.8	Non-Exposed	54	54	54	54	54	54	54	54	54	54	54	54	54	54	54	54	54	54	54	54	54	53	53	53	52	52	52	51	51	48	50	50	44	49	47	41	47	44	38	44	41	36
				Exposed	54	54	54	54	54	54	54	54	54	54	54	54	54	54	51	54	54	49	54	53	46	53	51	44	51	46	40	46	42	37	43	39	34	39	36	0	37	34	0	34	0	0
		11:12	42.5	Non-Exposed	56	56	56	56	56	56	56	56	56	56	56	56	56	56	56	56	56	56	56	56	56	55	55	55	54	54	52	53	53	48	51	50	44	50	47	41	47	43	38	44	41	36
				Exposed	56	56	56	56	56	56	56	56	56	56	56	54	56	56	51	56	55	49	56	53	46	55	50	44	50	46	40	46	42	37	43	39	34	39	36	0	37	34	0	34	0	0
		12:12	45	Non-Exposed	57	57	57	57	57	57	57	57	57	57	57	57	57	57	57	57	57	57	57	57	57	57	57	56	56	56	52	54	54	47	53	50	44	51	46	41	47	43	38	44	41	36
				Exposed	57	57	57	57	57	57	57	57	57	57	57	54	57	57	51	57	55	49	57	53	46	55	50	44	50	46	40	46	42	37	42	39	34	39	36	0	37	34	0	34	0	0
	D	Flat	0	Non-Exposed	53	53	53	53	53	53	53	53	53	53	53	53	53	53	52	53	53	50	53	53	47	53	53	45	53	49	41	53	45	37	51	42	35	47	39	32	44	36	0	41	34	0
				Exposed	53	53	52	53	53	48	53	53	45	53	52	43	53	49	40	53	47	38	53	44	36	51	42	35	46	39	0	43	36	0	39	33	0	37	0	0	34	0	0	32	0	0
		1:12	4.8	Non-Exposed	50	50	50	50	50	50	50	50	50	50	50	50	50	50	50	50	50	49	50	50	47	50	50	45	50	49	41	50	45	37	50	42	34	47	39	32	44	36	0	41	34	0
				Exposed	50	50	50	50	50	48	50	50	45	50	50	43	50	49	40	50	46	38	50	44	36	50	42	35	46	39	0	43	35	0	39	33	0	37	0	0	34	0	0	0	0	0
		2:12	9.5	Non-Exposed	47	47	47	47	47	47	47	47	47	47	47	47	47	47	47	47	47	47	47	47	44	47	47	42	47	43	38	47	39	35	44	36	32	41	33	0	39	0	0	36	0	0
				Exposed	47	47	47	47	47	45	47	47	43	47	45	40	47	43	38	47	40	36	47	38	34	45	36	32	41	33	0	38	0	0	35	0	0	33	0	0	0	0	0	0	0	0
		3:12	14.0	Non-Exposed	45	45	45	45	45	45	45	45	45	45	45	45	45	45	45	45	45	45	45	45	44	45	45	42	45	43	38	45	39	35	44	36	32	41	33	0	39	0	0	36	0	0
				Exposed	45	45	45	45	45	45	45	45	43	45	45	40	45	42	38	45	40	36	45	38	34	44	36	32	41	33	0	38	0	0	35	0	0	33	0	0	0	0	0	0	0	0
		4:12	18.4	Non-Exposed	45	45	45	45	45	45	45	45	45	45	45	45	45	45	45	45	45	45	45	45	44	45	45	42	45	43	38	45	39	35	44	36	32	41	33	0	39	0	0	36	0	0
				Exposed	45	45	45	45	45	45	45	45	42	45	45	40	45	42	38	45	40	36	45	38	34	44	36	32	41	33	0	38	0	0	35	0	0	0	0	0	0	0	0	0	0	0
		5:12	22.6	Non-Exposed	46	46	46	46	46	46	46	46	46	46	46	46	46	46	46	46	46	46	46	46	46	46	46	43	46	46	43	44	34	0	46	40	36	46	37	34	45	35	31	43	32	0
				Exposed	46	46	46	46	46	46	46	46	46	46	46	46	46	46	43	46	45	41	46	42	39	46	40	37	46	37	33	44	34	0	41	0	0	38	0	0	36	0	0	34	0	0
		6:12	26.6	Non-Exposed	47	47	47	47	47	47	47	47	47	47	47	47	47	47	47	47	47	47	47	47	47	47	47	43	47	47	43	44	34	0	47	40	36	46	37	34	45	35	0	42	32	0
				Exposed	47	47	47	47	47	47	47	47	47	47	47	46	47	47	43	47	45	41	47	42	39	47	40	37	47	37	33	44	34	0	41	0	0	38	0	0	36	0	0	34	0	0
		7:12	30.3	Non-Exposed	49	49	49	49	49	49	49	49	49	49	49	49	49	49	49	49	49	49	48	48	48	48	48	48	47	47	47	46	46	43	44	44	40	43	42	37	42	39	35	40	37	32
				Exposed	49	49	49	49	49	49	49	49	49	49	49	49	49	49	47	49	49	44	48	48	42	48	46	40	46	42	37	42	39	34	38	36	0	36	33	0	33	0	0	0	0	0
		8:12	33.7	Non-Exposed	51	51	51	51	51	51	51	51	51	51	51	51	51	51	51	50	50	50	50	50	50	49	49	49	48	48	47	47	47	43	46	46	40	44	42	37	43	39	34	40	37	32
				Exposed	51	51	51	51	51	51	51	51	51	51	51	49	51	51	47	50	50	44	50	48	42	49	46	40	46	42	37	42	38	34	38	36	0	36	33	0	33	0	0	0	0	0
		9:12	36.9	Non-Exposed	52	52	52	52	52	52	52	52	52	52	52	52	52	52	52	52	52	52	51	51	51	51	51	49	49	47	48	48	43	47	45	40	46	42	37	43	39	34	40	37	32
				Exposed	52	52	52	52	52	52	52	52	52	52	52	49	52	52	47	52	50	44	51	48	42	50	46	40	46	42	37	42	38	34	38	35	0	35	33	0	33	0	0	0	0	0
		10:12	39.8	Non-Exposed	54	54	54	54	54	54	54	54	54	54	54	54	54	54	54	53	53	53	53	53	53	52	52	51	51	51	47	49	49	43	48	45	40	46	42	37	43	39	34	40	37	32
				Exposed	54	54	54	54	54	54	54	54	52	54	54	49	54	53	46	53	50	44	53	48	42	50	46	40	45	42	37	42	38	34	38	35	0	35	33	0	33	0	0	0	0	0
		11:12	42.5	Non-Exposed	56	56	56	56	56	56	56	56	56	56	56	56	56	56	56	55	55	55	54	54	54	54	54	51	52	52	47	51	49	43	49	45	40	46	42	37	43	39	34	40	37	32
				Exposed	56	56	56	56	56	55	56	56	52	56	56	49	56	53	46	55	50	44	52	48	42	50	46	40	45	42	36	41	38	34	38	35	0	35	33	0	33	0	0	0	0	0
		12:12	45	Non-Exposed	57	57	57	57	57	57	57	57	57	57	57	57	57	57	57	57	57	56	56	56	53	55	55	51	54	53	47	52	49	43	49	45	40	46	42	37	43	39	34	40	37	32
				Exposed	57	57	57	57	57	55	57	57	52	57	56	49	57	53	46	55	50	44	52	48	42	50	45	40	45	42	36	41	38	33	38	35	0	35	33	0	33	0	0	0	0	0

Tamarack 2.3 Rail – Gable Flush-Mount on 30 Foot Maximum Mean Roof Height – Portrait – Panel Length = 96 Inches or Less

Ground Snow Load	Exposure Category	Roof Pitch	Roof Angle	Wind Speed (mph)	95			100			105			110			115			120			125			130			140			150			160			170			180			190		
				Roof Area	1	2	3	1	2	3	1	2	3	1	2	3	1	2	3	1	2	3	1	2	3	1	2	3	1	2	3	1	2	3	1	2	3	1	2	3	1	2	3	1	2	3
35	B	Flat	0	Non-Exposed	50	50	50	50	50	50	50	50	50	50	50	50	50	50	50	50	50	50	50	50	50	50	50	50	50	50	50	50	50	50	50	50	47	50	50	44	50	50	41	50	46	38
				Exposed	50	50	50	50	50	50	50	50	50	50	50	50	50	50	50	50	50	50	50	50	50	50	50	48	50	50	43	50	48	40	50	45	37	50	41	34	47	39	32	44	36	0
		1:12	4.8	Non-Exposed	46	46	46	46	46	46	46	46	46	46	46	46	46	46	46	46	46	46	46	46	46	46	46	46	46	46	46	46	46	46	46	46	46	46	46	44	46	46	41	46	46	38
				Exposed	46	46	46	46	46	46	46	46	46	46	46	46	46	46	46	46	46	46	46	46	46	46	46	46	46	46	43	46	46	40	46	45	37	46	41	34	46	39	0	43	36	0
		2:12	9.5	Non-Exposed	44	44	44	44	44	44	44	44	44	44	44	44	44	44	44	44	44	44	44	44	44	44	44	44	44	44	44	44	44	44	44	44	44	44	44	41	44	43	38	44	40	36
				Exposed	44	44	44	44	44	44	44	44	44	44	44	44	44	44	44	44	44	44	44	44	44	44	44	44	44	44	41	44	42	37	44	39	34	44	36	32	41	33	0	39	0	0
		3:12	14.0	Non-Exposed	42	42	42	42	42	42	42	42	42	42	42	42	42	42	42	42	42	42	42	42	42	42	42	42	42	42	42	42	42	42	42	42	42	42	42	41	42	42	38	42	40	36
				Exposed	42	42	42	42	42	42	42	42	42	42	42	42	42	42	42	42	42	42	42	42	42	42	42	42	42	42	41	42	42	37	42	38	34	42	36	32	41	33	0	39	0	0
		4:12	18.4	Non-Exposed	42	42	42	42	42	42	42	42	42	42	42	42	42	42	42	42	42	42	42	42	42	42	42	42	42	42	42	42	42	42	42	42	42	42	42	41	42	42	38	42	40	36
				Exposed	42	42	42	42	42	42	42	42	42	42	42	42	42	42	42	42	42	42	42	42	42	42	42	42	42	42	41	42	42	37	42	38	34	42	36	32	41	33	0	39	0	0
		5:12	22.6	Non-Exposed	43	43	43	43	43	43	43	43	43	43	43	43	43	43	43	43	43	43	43	43	43	43	43	43	43	43	43	43	43	43	43	43	43	43	43	43	43	43	43	43	43	41
				Exposed	43	43	43	43	43	43	43	43	43	43	43	43	43	43	43	43	43	43	43	43	43	43	43	43	43	43	43	43	43	42	43	43	39	43	40	36	43	37	33	43	34	0
		6:12	26.6	Non-Exposed	44	44	44	44	44	44	44	44	44	44	44	44	44	44	44	44	44	44	44	44	44	44	44	44	44	44	44	44	44	44	44	44	44	44	44	44	44	44	43	44	44	40
				Exposed	44	44	44	44	44	44	44	44	44	44	44	44	44	44	44	44	44	44	44	44	44	44	44	44	44	44	44	44	44	42	44	43	39	44	40	36	44	37	33	44	34	0
		7:12	30.3	Non-Exposed	46	46	46	46	46	46	46	46	46	46	46	46	46	46	46	46	46	46	46	46	46	46	46	46	46	46	46	46	46	46	46	46	46	45	45	45	45	45	45	45	45	45
				Exposed	46	46	46	46	46	46	46	46	46	46	46	46	46	46	46	46	46	46	46	46	46	46	46	45	45	45	41	45	43	37	43	39	35	40	37	32	37	34	0	34	0	0
		8:12	33.7	Non-Exposed	47	47	47	47	47	47	47	47	47	47	47	47	47	47	47	47	47	47	47	47	47	47	47	47	47	47	47	46	46	46	45	45	44	44	44	41	43	43	38	42	41	36
				Exposed	47	47	47	47	47	47	47	47	47	47	47	47	47	47	47	47	47	47	47	47	47	47	47	44	47	46	41	46	43	37	43	39	34	40	37	32	37	34	0	34	0	0
		9:12	36.9	Non-Exposed	50	50	50	50	50	50	50	50	50	50	50	50	50	50	50	50	50	50	50	50	50	49	49	49	48	48	48	47	47	47	46	46	44	45	45	41	44	44	38	43	41	36
				Exposed	50	50	50	50	50	50	50	50	50	50	50	50	50	50	50	50	50	49	50	50	47	49	49	44	48	46	41	46	43	37	43	39	34	40	37	32	37	34	0	34	0	0
		10:12	39.8	Non-Exposed	51	51	51	51	51	51	51	51	51	51	51	51	51	51	51	51	51	51	51	51	51	51	51	51	50	50	50	49	49	48	48	48	44	47	47	41	45	44	38	44	41	36
				Exposed	51	51	51	51	51	51	51	51	51	51	51	51	51	51	51	51	51	49	51	51	46	51	51	44	50	46	40	46	42	37	43	39	34	39	36	0	37	34	0	34	0	0
		11:12	42.5	Non-Exposed	53	53	53	53	53	53	53	53	53	53	53	53	53	53	53	53	53	53	53	53	53	53	53	53	52	52	52	50	50	48	49	49	44	48	47	41	47	43	38	44	41	36
				Exposed	53	53	53	53	53	53	53	53	53	53	53	53	53	53	51	53	53	49	53	53	46	53	50	44	50	46	40	46	42	37	43	39	34	39	36	0	37	34	0	34	0	0
		12:12	45	Non-Exposed	55	55	55	55	55	55	55	55	55	55	55	55	55	55	55	55	55	55	55	55	55	55	55	55	53	53	52	52	52	47	51	50	44	49	46	41	47	43	38	44	41	36
				Exposed	55	55	55	55	55	55	55	55	55	55	55	54	55	55	51	55	55	49	55	53	46	55	50	44	50	46	40	46	42	37	42	39	34	39	36	0	37	34	0	34	0	0
	C	Flat	0	Non-Exposed	50	50	50	50	50	50	50	50	50	50	50	50	50	50	50	50	50	50	50	50	50	50	50	50	50	50	45	50	50	42	50	47	38	50	43	36	49	40	33	45	38	0
				Exposed	50	50	50	50	50	50	50	50	50	50	50	48	50	50	45	50	50	43	50	49	41	50	47	39	50	43	35	47	39	32	44	36	0	41	34	0	38	0	0	35	0	0
		1:12	4.8	Non-Exposed	46	46	46	46	46	46	46	46	46	46	46	46	46	46	46	46	46	46	46	46	46	46	46	46	46	46	45	46	46	41	46	46	38	46	43	35	46	40	33	45	38	0
				Exposed	46	46	46	46	46	46	46	46	46	46	46	46	46	46	45	46	46	43	46	46	40	46	46	38	46	43	35	46	39	32	44	36	0	41	34	0	38	0	0	35	0	0
		2:12	9.5	Non-Exposed	44	44	44	44	44	44	44	44	44	44	44	44	44	44	44	44	44	44	44	44	44	44	44	44	44	44	43	44	44	39	44	40	36	44	37	33	43	35	0	40	32	0
				Exposed	44	44	44	44	44	44	44	44	44	44	44	44	44	44	42	44	44	40	44	43	38	44	41	36	44	37	33	42	34	0	39	0	0	36	0	0	34	0	0	0	0	0
		3:12	14.0	Non-Exposed	42	42	42	42	42	42	42	42	42	42	42	42	42	42	42	42	42	42	42	42	42	42	42	42	42	42	42	42	42	39	42	40	36	42	37	33	42	35	0	40	32	0
				Exposed	42	42	42	42	42	42	42	42	42	42	42	42	42	42	42	42	42	40	42	42	38	42	40	36	42	37	33	42	34	0	39	0	0	36	0	0	34	0	0	0	0	0
		4:12	18.4	Non-Exposed	42	42	42	42	42	42	42	42	42	42	42	42	42	42	42	42	42	42	42	42	42	42	42	42	42	42	42	42	42	39	42	40	36	42	37	33	42	34	0	40	32	0
				Exposed	42	42	42	42	42	42	42	42	42	42	42	42	42	42	42	42	42	40	42	42	38	42	40	36	42	37	33	41	34	0	39	0	0	36	0	0	34	0	0	0	0	0
		5:12	22.6	Non-Exposed	43	43	43	43	43	43	43	43	43	43	43	43	43	43	43	43	43	43	43	43	43	43	43	43	43	43	43	43	43	43	43	43	41	43	41	38	43	39	35	43	36	33
				Exposed	43	43	43	43	43	43	43	43	43	43	43	43	43	43	43	43	43	43	43	43	43	43	43	41	43	41	37	43	38	34	43	35	31	42	32	0	40	0	0	37	0	0
		6:12	26.6	Non-Exposed	44	44	44	44	44	44	44	44	44	44	44	44	44	44	44	44	44	44	44	44	44	44	44	44	44	44	44	44	44	44	44	44	41	44	41	38	44	38	35	44	36	33
				Exposed	44	44	44	44	44	44	44	44	44	44	44	44	44	44	44	44	44	44	44	44	43	44	44	41	44	41	37	44	37	34	44	35	0	42	32	0	40	0	0	37	0	0
		7:12	30.3	Non-Exposed	46	46	46	46	46	46	46	46	46	46	46	46	46	46	46	46	46	46	46	46	46	46	46	46	45	45	45	45	45	45	44	44	44	43	43	41	42	42	38	41	41	36
				Exposed	46	46	46	46	46	46	46	46	46	46	46	46	46	46	46	46	46	46	46	46	46	46	46	45	45	45	41	45	43	37	43	39	35	40	37	32	37	34	0	34	32	0
		8:12	33.7	Non-Exposed	47	47	47	47	47	47	47	47	47	47	47	47	47	47	47	47	47	47	47	47	47	47	47	47	47	47	47	46	46	46	45	45	44	44	44	41	43	43	38	42	41	36
				Exposed	47	47	47	47	47	47	47	47	47	47	47	47	47	47	47	47	47	47	47	47	47	47	47	44	47	46	41	46	43	37	43	39	34	40	37	32	37	34	0	34	0	0
		9:12	36.9	Non-Exposed	50	50	50	50	50	50	50	50	50	50	50	50	50	50	50	50	50	50	50	50	50	49	49	49	48	48	48	47	47	47	46	46	44	45	45	41	44	44	38	43	41	36
				Exposed	50	50	50	50	50	50	50	50	50	50	50	50	50	50	50	50	50	49	50	50	47	49	49	44	48	46	41	46	43	37	43	39	34	40	37	32	37	34	0	34	0	0
		10:12	39.8	Non-Exposed	51	51	51	51	51	51	51	51	51	51	51	51	51	51	51	51	51	51	51	51	51	51	51	51	50	50	50	49	49	48	48	48	44	47	47	41	45	44	38	44	41	36
				Exposed	51	51	51	51	51	51	51	51	51	51	51	51	51	51	51	51	51	49	51	51	46	51	51	44	50	46	40	46	42	37	43	39	34	39	36	0	37	34	0	34	0	0
		11:12	42.5	Non-Exposed	53	53	53	53	53	53	53	53	53	53	53	53	53	53	53	53	53	53	53	53	53	53	53	53	52	52	52	50	50	48	49	49	44	48	47	41	47	43	38	44	41	36
				Exposed	53	53	53	53	53	53	53	53	53	53	53	53	53	53	51	53	53	49	53	53	46	53	50	44	50	46	40	46	42	37	43	39	34	39	36	0	37	34	0	34	0	0
		12:12	45	Non-Exposed	55	55	55	55	55	55	55	55	55	55	55	55	55	55	55	55	55	55	55	55	55	55	55	55	53	53	52	52	52	47	51	50	44	49	46	41	47	43	38	44	41	36
				Exposed	55	55	55	55	55	55	55	55	55	55	55	54	55	55	51	55	55	49	55	53	46	55	50	44	50	46	40	46	42	37	42	39	34	39	36	0	37	34	0	34	0	0
	D	Flat	0	Non-Exposed	50	50	50	50	50	50	50	50	50	50	50	50	50	50	50	50	50	50	50	50	47	50	50	45	50	49	41	50	45	37	50	42	35	47	39	32	44	36	0	41	34	0
				Exposed	50	50	50	50	50	48	50	50	45	50	50	43	50	49	40	50	47	38	50	44	36	50	42	35	46	39	0	43	36	0	39	33	0	37	0	0	34	0	0	32	0	0
		1:12	4.8	Non-Exposed	46	46	46	46	46	46	46	46	46	46	46	46	46	46	46	46	46	46	46	46	46	46	46	45	46	46	41	46	45	37	46	42	34	46	39	32	44	36	0	41	34	0
				Exposed	46	46	46	46	46	46	46	46	45	46	46	43	46	46	40	46	46	38	46	44	36	46	42	35	46	39	0	43	35	0	39	33	0	37	0	0	34	0	0	0	0	0
		2:12	9.5	Non-Exposed	44	44	44	44	44	44	44	44	44	44	44	44	44	44	44	44	44	44	44	44	44	44	44	42	44	43	38	44	39	35	44	36	32	41	33	0	39	0	0	36	0	0
				Exposed	44	44	44	44	44	44	44	44	43	44	44	40	44	43	38	44	40	36	44	38	34	44	36	32	41	33	0	38	0	0	35	0	0	33	0	0	0	0	0	0	0	0
		3:12	14.0	Non-Exposed	42	42	42	42	42	42	42	42	42	42	42	42	42	42	42	42	42	42	42	42	42	42	42	42	42	42	38	42	39	35	42	36	32	41	33	0	39	0	0	36	0	0
				Exposed	42	42	42	42	42	42	42	42	42	42	42	40	42	42	38	42	40	36	42	38	34	42	36	32	41	33	0	38	0	0	35	0	0	33	0	0	0	0	0	0	0	0
		4:12	18.4	Non-Exposed	42	42	42	42	42	42	42	42	42	42	42	42	42	42	42	42	42	42	42	42	42	42	42	42	42	42	38	42	39	35	42	36	32	41	33	0	39	0	0	36	0	0
				Exposed	42	42	42	42	42	42	42	42	42	42	42	40	42	42	38	42	40	36	42	38	34	42	36	32	41	33	0	38	0	0	35	0	0	0	0	0	0	0	0	0	0	0
		5:12	22.6	Non-Exposed	43	43	43	43	43	43	43	43	43	43	43	43	43	43	43	43	43	43	43	43	43	43	43	43	43	43	43	43	43	40	43	40	36	43	37	34	43	35	31	42	32	0
				Exposed	43	43	43	43	43	43	43	43	43	43	43	43	43	43	43	43	41	43	42	39	43	40	37	43	37	33	43	34	0	41	0	0	38	0	0	36	0	0	34	0	0
		6:12	26.6	Non-Exposed	44	44	44	44	44	44	44	44	44	44	44	44	44	44	44	44	44	44	44	44	44	44	44	44	44	44	43	44	43	40	44	40	36	44	37	34	43	35	0	42	32	0
				Exposed	44	44	44	44	44	44	44	44	44	44	44	44	44	44	43	44	44	41	44	42	39	44	40	37	44	37	33	44	34	0	41	0	0	38	0	0	36	0	0	34	0	0
		7:12	30.3	Non-Exposed	46	46	46	46	46	46	46	46	46	46	46	46	46	46	46	46	46	46	46	46	46	45	45	45	44	44	44	43	43	43	42	42	40	42	42	37	41	39	35	40	37	32
				Exposed	46	46	46	46	46	46	46	46	46	46	46	46	46	46	46	46	46	44	46	46	42	45	45	40	44	42	37	42	39	34	38	36	0	36	33	0	33	0	0	0	0	0
		8:12	33.7	Non-Exposed	47	47	47	47	47	47	47	47	47	47	47	47	47	47	47	47	47	47	47	47	47	47	47	47	46	46	46	45	45	43	44	44	40	43	42	37	42	39	34	40	37	32
				Exposed	47	47	47	47	47	47	47	47	47	47	47	47	47	47	47	47	47	44	47	47	42	47	46	40	46	42	37	42	38	34	38	36	0	36	33	0	33	0	0	0	0	0
		9:12	36.9	Non-Exposed	50	50	50	50	50	50	50	50	50	50	50	50	50	50	50	50	49	49	49	49	49	48	48	48	47	47	47	46	46	43	45	45	40	44	42	37	43	39	34	40	37	32
				Exposed	50	50	50	50	50	50	50	50	50	50	50	49	50	50	47	49	49	44	49	48	42	48	46	40	46	42	37	42	38	34	38	35	0	35	33	0	33	0	0	0	0	0
		10:12	39.8	Non-Exposed	51	51	51	51	51	51	51	51	51	51	51	51	51	51	51	51	51	50	50	50	50	49	49	47	47	47	43	46	45	40	45	42	37	43	39	34	40	37	32
				Exposed	51	51	51	51	51	51	51	51	51	51	51	49	51	51	46	51	50	44	50	48	42	50	46	40	45	42	37	42	38	34	38	35	0	35	33	0	33	0	0	0	0	0
		11:12	42.5	Non-Exposed	53	53	53	53	53	53	53	53	53	53	53	53	53	53	53	53	53	53	52	52	52	51	51	51	50	50	47	49	49	43	48	45	40	46	42	37	43	39	34	40	37	32
				Exposed	53	53	53	53	53	53	53	53	52	53	53	49	53	53	46	53	50	44	52	48	42	50	46	40	45	42	36	41	38	34	38	35	0	35	33	0	33	0	0	0	0	0
		12:12	45	Non-Exposed	55	55	55	55	55	55	55	55	55	55	55	55	55	55	55	55	55	54	54	53	53	53	51	52	52	47	50	49	43	49	45	40	46	42	37	43	39	34	40	37	32
				Exposed	55	55	55	55	55	55	55	55	52	55	55	49	55	53	46	55	50	44	52	48	42	50	45	40	45	42	36	41	38	33	38	35	0	35	33	0	33	0	0	0	0	0

Tamarack 2.3 Rail – Gable Flush-Mount on 30 Foot Maximum Mean Roof Height – Portrait – Panel Length = 96 Inches or Less

Ground Snow Load	Exposure Category	Roof Pitch	Roof Angle	Wind Speed (mph)	95			100			105			110			115			120			125			130			140			150			160			170			180			190		
				Roof Area	1	2	3	1	2	3	1	2	3	1	2	3	1	2	3	1	2	3	1	2	3	1	2	3	1	2	3	1	2	3	1	2	3	1	2	3	1	2	3	1	2	3
40	B	Flat	0	Non-Exposed	47	47	47	47	47	47	47	47	47	47	47	47	47	47	47	47	47	47	47	47	47	47	47	47	47	47	47	47	47	47	47	47	47	47	47	44	47	47	41	47	46	38
				Exposed	47	47	47	47	47	47	47	47	47	47	47	47	47	47	47	47	47	47	47	47	47	47	47	47	47	47	43	47	47	40	47	45	37	47	41	34	47	39	32	44	36	0
		1:12	4.8	Non-Exposed	44	44	44	44	44	44	44	44	44	44	44	44	44	44	44	44	44	44	44	44	44	44	44	44	44	44	44	44	44	44	44	44	44	44	44	44	44	44	41	44	44	38
				Exposed	44	44	44	44	44	44	44	44	44	44	44	44	44	44	44	44	44	44	44	44	44	44	44	44	44	44	43	44	44	40	44	44	37	44	41	34	44	39	0	43	36	0
		2:12	9.5	Non-Exposed	41	41	41	41	41	41	41	41	41	41	41	41	41	41	41	41	41	41	41	41	41	41	41	41	41	41	41	41	41	41	41	41	41	41	41	41	41	41	38	41	40	36
				Exposed	41	41	41	41	41	41	41	41	41	41	41	41	41	41	41	41	41	41	41	41	41	41	41	41	41	41	41	41	41	37	41	39	34	41	36	32	41	33	0	39	0	0
		3:12	14.0	Non-Exposed	39	39	39	39	39	39	39	39	39	39	39	39	39	39	39	39	39	39	39	39	39	39	39	39	39	39	39	39	39	39	39	39	39	39	39	39	39	39	38	39	39	36
				Exposed	39	39	39	39	39	39	39	39	39	39	39	39	39	39	39	39	39	39	39	39	39	39	39	39	39	39	39	39	39	37	39	38	34	39	36	32	39	33	0	39	0	0
		4:12	18.4	Non-Exposed	40	40	40	40	40	40	40	40	40	40	40	40	40	40	40	40	40	40	40	40	40	40	40	40	40	40	40	40	40	40	40	40	40	40	40	40	40	40	38	40	40	36
				Exposed	40	40	40	40	40	40	40	40	40	40	40	40	40	40	40	40	40	40	40	40	40	40	40	40	40	40	40	40	40	37	40	38	34	40	36	32	40	33	0	38	0	0
		5:12	22.6	Non-Exposed	40	40	40	40	40	40	40	40	40	40	40	40	40	40	40	40	40	40	40	40	40	40	40	40	40	40	40	40	40	40	40	40	40	40	40	40	40	40	40	40	40	40
				Exposed	40	40	40	40	40	40	40	40	40	40	40	40	40	40	40	40	40	40	40	40	40	40	40	40	40	40	40	40	40	40	40	40	39	40	40	36	40	37	33	40	34	0
		6:12	26.6	Non-Exposed	41	41	41	41	41	41	41	41	41	41	41	41	41	41	41	41	41	41	41	41	41	41	41	41	41	41	41	41	41	41	41	41	41	41	41	41	41	41	41	41	41	40
				Exposed	41	41	41	41	41	41	41	41	41	41	41	41	41	41	41	41	41	41	41	41	41	41	41	41	41	41	41	41	41	37	41	39	34	41	36	32	41	33	0	41	0	0
		7:12	30.3	Non-Exposed	43	43	43	43	43	43	43	43	43	43	43	43	43	43	43	43	43	43	43	43	43	43	43	43	43	43	43	43	43	43	43	43	43	43	43	43	42	42	42	42	42	42
				Exposed	43	43	43	43	43	43	43	43	43	43	43	43	43	43	43	43	43	43	43	43	43	43	43	43	43	43	43	43	43	43	43	43	42	43	43	39	42	42	37	42	39	34
		8:12	33.7	Non-Exposed	45	45	45	45	45	45	45	45	45	45	45	45	45	45	45	45	45	45	45	45	45	45	45	45	45	45	45	45	45	45	45	45	45	44	44	44	44	44	44	43	43	43
				Exposed	45	45	45	45	45	45	45	45	45	45	45	45	45	45	45	45	45	45	45	45	45	45	45	45	45	45	45	45	45	45	45	45	42	44	44	39	44	42	37	43	39	34
		9:12	36.9	Non-Exposed	47	47	47	47	47	47	47	47	47	47	47	47	47	47	47	47	47	47	47	47	47	47	47	47	47	47	47	47	47	47	47	47	47	46	46	46	45	45	45	44	44	44
				Exposed	47	47	47	47	47	47	47	47	47	47	47	47	47	47	47	47	47	47	47	47	47	47	47	47	47	47	47	47	47	47	47	47	47	44	44	39	44	42	37	43	39	34
		10:12	39.8	Non-Exposed	49	49	49	49	49	49	49	49	49	49	49	49	49	49	49	49	49	49	49	49	49	49	49	49	49	49	49	49	49	49	49	49	49	48	48	48	47	47	47	46	46	44
				Exposed	49	49	49	49	49	49	49	49	49	49	49	49	49	49	49	49	49	49	49	49	49	49	49	49	49	49	49	49	49	46	49	49	44	48	46	40	46	42	37	43	39	34
		11:12	42.5	Non-Exposed	51	51	51	51	51	51	51	51	51	51	51	51	51	51	51	51	51	51	51	51	51	51	51	51	50	50	50	49	49	48	47	47	44	46	46	41	45	43	38	44	41	36
				Exposed	51	51	51	51	51	51	51	51	51	51	51	51	51	51	51	51	51	49	51	51	46	51	50	44	50	46	40	46	42	37	43	39	34	39	36	0	37	34	0	34	0	0
		12:12	45	Non-Exposed	53	53	53	53	53	53	53	53	53	53	53	53	53	53	53	53	53	53	53	53	53	53	53	53	51	51	51	50	50	47	49	49	44	48	46	41	47	43	38	44	41	36
				Exposed	53	53	53	53	53	53	53	53	53	53	53	53	53	53	51	53	53	49	53	53	46	53	50	44	50	46	40	46	42	37	42	39	34	39	36	0	37	34	0	34	0	0
	C	Flat	0	Non-Exposed	47	47	47	47	47	47	47	47	47	47	47	47	47	47	47	47	47	47	47	47	47	47	47	47	47	47	45	47	47	42	47	47	38	47	43	36	47	40	33	45	38	0
				Exposed	47	47	47	47	47	47	47	47	47	47	47	47	47	47	45	47	47	43	47	47	41	47	47	39	47	43	35	47	39	32	44	36	0	41	34	0	38	0	0	35	0	0
		1:12	4.8	Non-Exposed	44	44	44	44	44	44	44	44	44	44	44	44	44	44	44	44	44	44	44	44	44	44	44	44	44	44	44	44	44	41	44	44	38	44	43	35	44	40	33	44	38	0
				Exposed	44	44	44	44	44	44	44	44	44	44	44	44	44	44	44	44	44	43	44	44	40	44	44	38	44	43	35	44	39	32	44	36	0	41	34	0	38	0	0	35	0	0
		2:12	9.5	Non-Exposed	41	41	41	41	41	41	41	41	41	41	41	41	41	41	41	41	41	41	41	41	41	41	41	41	41	41	41	41	41	39	41	40	36	41	37	33	41	35	0	40	32	0
				Exposed	41	41	41	41	41	41	41	41	41	41	41	41	41	41	41	41	41	40	41	41	38	41	41	36	41	37	33	41	34	0	39	0	0	36	0	0	34	0	0	0	0	0
		3:12	14.0	Non-Exposed	39	39	39	39	39	39	39	39	39	39	39	39	39	39	39	39	39	39	39	39	39	39	39	39	39	39	39	39	39	39	39	39	36	39	37	33	39	35	0	39	32	0
				Exposed	39	39	39	39	39	39	39	39	39	39	39	39	39	39	39	39	39	39	39	39	38	39	39	36	39	37	33	39	34	0	39	0	0	36	0	0	34	0	0	0	0	0
		4:12	18.4	Non-Exposed	40	40	40	40	40	40	40	40	40	40	40	40	40	40	40	40	40	40	40	40	40	40	40	40	40	40	40	40	40	39	40	40	36	40	37	33	40	34	0	40	32	0
				Exposed	40	40	40	40	40	40	40	40	40	40	40	40	40	40	40	40	40	40	40	40	38	40	40	36	40	37	33	40	34	0	39	0	0	36	0	0	34	0	0	0	0	0
		5:12	22.6	Non-Exposed	40	40	40	40	40	40	40	40	40	40	40	40	40	40	40	40	40	40	40	40	40	40	40	40	40	40	40	40	40	40	40	40	38	40	40	38	40	39	35	40	36	33
				Exposed	40	40	40	40	40	40	40	40	40	40	40	40	40	40	40	40	40	40	40	40	40	40	40	40	40	40	37	40	38	34	40	35	31	40	32	0	40	0	0	37	0	0
		6:12	26.6	Non-Exposed	41	41	41	41	41	41	41	41	41	41	41	41	41	41	41	41	41	41	41	41	41	41	41	41	41	41	41	41	41	41	41	41	38	41	41	38	41	38	35	41	36	33
				Exposed	41	41	41	41	41	41	41	41	41	41	41	41	41	41	41	41	41	41	41	41	41	41	41	41	41	41	37	41	37	34	41	35	0	41	32	0	40	0	0	37	0	0
		7:12	30.3	Non-Exposed	43	43	43	43	43	43	43	43	43	43	43	43	43	43	43	43	43	43	43	43	43	43	43	43	43	43	43	43	43	43	42	42	42	41	41	41	40	40	38	39	39	36
				Exposed	43	43	43	43	43	43	43	43	43	43	43	43	43	43	43	43	43	43	43	43	43	43	43	43	43	43	41	43	43	37	42	39	35	40	37	32	37	34	0	34	32	0
		8:12	33.7	Non-Exposed	45	45	45	45	45	45	45	45	45	45	45	45	45	45	45	45	45	45	45	45	45	45	45	45	45	45	45	44	44	44	43	43	43	42	42	41	41	41	38	41	41	36
				Exposed	45	45	45	45	45	45	45	45	45	45	45	45	45	45	45	45	45	45	45	45	45	45	45	44	45	45	41	44	43	37	43	39	34	40	37	32	37	34	0	34	0	0
		9:12	36.9	Non-Exposed	47	47	47	47	47	47	47	47	47	47	47	47	47	47	47	47	47	47	47	47	47	47	47	47	46	46	46	45	45	45	44	44	44	44	44	41	43	43	38	42	41	36
				Exposed	47	47	47	47	47	47	47	47	47	47	47	47	47	47	47	47	47	47	47	47	47	47	47	44	46	46	41	45	43	37	43	39	34	40	37	32	37	34	0	34	0	0
		10:12	39.8	Non-Exposed	49	49	49	49	49	49	49	49	49	49	49	49	49	49	49	49	49	49	49	49	49	49	49	49	48	48	48	47	47	47	46	46	44	45	45	41	44	44	38	43	41	36
				Exposed	49	49	49	49	49	49	49	49	49	49	49	49	49	49	49	49	49	49	49	49	46	49	49	44	48	46	40	46	42	37	43	39	34	39	36	0	37	34	0	34	0	0
		11:12	42.5	Non-Exposed	51	51	51	51	51	51	51	51	51	51	51	51	51	51	51	51	51	51	51	51	51	51	51	50	50	50	49	49	48	47	47	44	46	46	41	45	43	38	44	41	36
				Exposed	51	51	51	51	51	51	51	51	51	51	51	51	51	51	51	51	51	49	51	51	46	51	50	44	50	46	40	46	42	37	43	39	34	39	36	0	37	34	0	34	0	0
		12:12	45	Non-Exposed	53	53	53	53	53	53	53	53	53	53	53	53	53	53	53	53	53	53	53	53	53	53	53	53	51	51	51	50	50	47	49	49	44	48	46	41	47	43	38	44	41	36
				Exposed	53	53	53	53	53	53	53	53	53	53	53	53	53	53	51	53	53	49	53	53	46	53	50	44	50	46	40	46	42	37	42	39	34	39	36	0	37	34	0	34	0	0
	D	Flat	0	Non-Exposed	47	47	47	47	47	47	47	47	47	47	47	47	47	47	47	47	47	47	47	47	47	47	47	47	47	47	41	47	45	37	47	42	35	47	39	32	44	36	0	41	34	0
				Exposed	47	47	47	47	47	47	47	47	45	47	47	43	47	47	40	47	47	38	47	44	36	47	42	35	46	39	0	43	36	0	39	33	0	37	0	0	34	0	0	32	0	0
		1:12	4.8	Non-Exposed	44	44	44	44	44	44	44	44	44	44	44	44	44	44	44	44	44	44	44	44	44	44	44	44	44	44	41	44	44	37	44	42	34	44	39	32	44	36	0	41	34	0
				Exposed	44	44	44	44	44	44	44	44	44	44	44	43	44	44	40	44	44	38	44	44	36	44	42	35	44	39	0	43	35	0	39	33	0	37	0	0	34	0	0	0	0	0
		2:12	9.5	Non-Exposed	41	41	41	41	41	41	41	41	41	41	41	41	41	41	41	41	41	41	41	41	41	41	41	41	41	41	38	41	39	35	41	36	32	41	33	0	39	0	0	36	0	0
				Exposed	41	41	41	41	41	41	41	41	41	41	41	40	41	41	38	41	41	36	41	41	34	41	41	32	41	33	0	38	0	0	35	0	0	33	0	0	0	0	0	0	0	0
		3:12	14.0	Non-Exposed	39	39	39	39	39	39	39	39	39	39	39	39	39	39	39	39	39	39	39	39	39	39	39	39	39	39	38	39	39	35	39	36	32	39	33	0	39	0	0	36	0	0
				Exposed	39	39	39	39	39	39	39	39	39	39	39	39	39	39	38	39	39	36	39	38	34	39	36	32	39	33	0	38	0	0	35	0	0	33	0	0	0	0	0	0	0	0
		4:12	18.4	Non-Exposed	40	40	40	40	40	40	40	40	40	40	40	40	40	40	40	40	40	40	40	40	40	40	40	40	40	40	38	40	39	35	40	36	32	40	33	0	39	0	0	36	0	0
				Exposed	40	40	40	40	40	40	40	40	40	40	40	40	40	38	40	40	36	40	38	34	40	36	32	40	33	0	38	0	0	35	0	0	0	0	0	0	0	0	0	0	0	0
		5:12	22.6	Non-Exposed	40	40	40	40	40	40	40	40	40	40	40	40	40	40	40	40	40	40	40	40	40	40	40	40	40	40	40	40	40	40	40	36	40	37	34	40	35	31	40	32	0
				Exposed	40	40	40	40	40	40	40	40	40	40	40	40	40	40	40	40	40	40	40	40	39	40	40	37	40	37	33	40	34	0	40	0	0	38	0	0	36	0	0	34	0	0
		6:12	26.6	Non-Exposed	41	41	41	41	41	41	41	41	41	41	41	41	41	41	41	41	41	41	41	41	41	41	41	41	41	41	41	41	41	41	41	36	41	37	34	41	35	0	41	32	0
				Exposed	41	41	41	41	41	41	41	41	41	41	41	41	41	41	41	41	41	41	41	41	39	41	40	37	41	37	33	41	34	0	41	0	0	38	0	0	36	0	0	34	0	0
		7:12	30.3	Non-Exposed	43	43	43	43	43	43	43	43	43	43	43	43	43	43	43	43	43	43	43	43	43	43	43	43	42	42	42	42	42	42	41	41	40	40	40	37	39	39	35	38	37	32
				Exposed	43	43	43	43	43	43	43	43	43	43	43	43	43	43	43	43	43	43	43	43	42	43	43	40	42	42	37	42	39	34	38	36	0	36	33	0	33	0	0	0	0	0
		8:12	33.7	Non-Exposed	45	45	45	45	45	45	45	45	45	45	45	45	45	45	45	45	45	45	45	45	45	45	45	45	44	44	44	43	43	43	42	42	40	41	41	37	40	39	34	39	37	32
				Exposed	45	45	45	45	45	45	45	45	45	45	45	45	45	45	45	45	45	44	45	45	42	45	45	40	44	42	37	42	38	34	38	36	0	36	33	0	33	0	0	0	0	0
		9:12	36.9	Non-Exposed	47	47	47	47	47	47	47	47	47	47	47	47	47	47	47	47	47	47	47	47	47	46	46	46	45	45	45	44	44	43	43	43	40	42	42	37	41	39	34	40	37	32
				Exposed	47	47	47	47	47	47	47	47	47	47	47	47	47	47	47	47	47	44	47	47	42	46	46	40	45	42	37	42	38	34	38	35	0	35	33	0	33	0	0	0	0	0
		10:12	39.8	Non-Exposed	49	49	49	49	49	49	49	49	49	49	49	49	49	49	49	49	49	49	48	48	48	48	48	48	47	47	47	46	46	43	44	44	40	43	42	37	42	39	34	40	37	32
				Exposed	49	49	49	49	49	49	49	49	49	49	49	49	49	46	49	49	44	48	48	42	48	46	40	45	42	37	42	38	34	38	35	0	35	33	0	33	0	0	0	0	0	0
		11:12	42.5	Non-Exposed	51	51	51	51	51	51	51	51	51	51	51	51	51	51	51	51	51	50	50	50	49	49	49	48	48	47	47	47	43	46	45	40	45	42	37	43	39	34	40	37	32
				Exposed	51	51	51	51	51	51	51	51	51	51	51	49	51	51	50	44	50	48	42	49	46	40	45	42	36	41	38	34	38	35	0	35	33	0	33	0	0	0	0	0	0	0
		12:12	45	Non-Exposed	53	53	53	53	53	53	53	53	53	53	53	53	53	53	53	52	52	52	52	52	52	51	51	51	50	50	47	49	49	43	47	45	40	46	42	37	43	39	34	40	37	32
				Exposed	53	53	53	53	53	53	53	53	52	53	53	49	53	53	46	52	50	44	52	48	42	50	45	40	45	42	36	41	38	33	38	35	0	35	33	0	33	0	0	0	0	0

Tamarack 2.3 Rail – Gable Flush-Mount on 30 Foot Maximum Mean Roof Height – Portrait – Panel Length = 96 Inches or Less

Ground Snow Load	Exposure Category	Roof Pitch	Roof Angle	Wind Speed (mph)	95			100			105			110			115			120			125			130			140			150			160			170			180			190		
				Roof Area	1	2	3	1	2	3	1	2	3	1	2	3	1	2	3	1	2	3	1	2	3	1	2	3	1	2	3	1	2	3	1	2	3	1	2	3	1	2	3	1	2	3
45	B	Flat	0	Non-Exposed	44	44	44	44	44	44	44	44	44	44	44	44	44	44	44	44	44	44	44	44	44	44	44	44	44	44	44	44	44	44	44	44	44	44	44	44	44	44	41	44	44	38
				Exposed	44	44	44	44	44	44	44	44	44	44	44	44	44	44	44	44	44	44	44	44	44	44	44	44	44	44	43	44	44	40	44	44	37	44	41	34	44	39	32	44	36	0
		1:12	4.8	Non-Exposed	41	41	41	41	41	41	41	41	41	41	41	41	41	41	41	41	41	41	41	41	41	41	41	41	41	41	41	41	41	41	41	41	41	41	41	41	41	41	41	41	41	38
				Exposed	41	41	41	41	41	41	41	41	41	41	41	41	41	41	41	41	41	41	41	41	41	41	41	41	41	41	41	41	41	40	41	41	37	41	41	34	41	39	0	41	36	0
		2:12	9.5	Non-Exposed	39	39	39	39	39	39	39	39	39	39	39	39	39	39	39	39	39	39	39	39	39	39	39	39	39	39	39	39	39	39	39	39	39	39	39	39	39	39	38	39	39	36
				Exposed	39	39	39	39	39	39	39	39	39	39	39	39	39	39	39	39	39	39	39	39	39	39	39	39	39	39	39	39	39	37	39	39	34	39	36	32	39	33	0	39	0	0
		3:12	14.0	Non-Exposed	37	37	37	37	37	37	37	37	37	37	37	37	37	37	37	37	37	37	37	37	37	37	37	37	37	37	37	37	37	37	37	37	37	37	37	37	37	37	37	37	37	36
				Exposed	37	37	37	37	37	37	37	37	37	37	37	37	37	37	37	37	37	37	37	37	37	37	37	37	37	37	37	37	37	37	37	37	34	37	36	32	37	33	0	37	0	0
		4:12	18.4	Non-Exposed	37	37	37	37	37	37	37	37	37	37	37	37	37	37	37	37	37	37	37	37	37	37	37	37	37	37	37	37	37	37	37	37	37	37	37	37	37	37	37	37	37	36
				Exposed	37	37	37	37	37	37	37	37	37	37	37	37	37	37	37	37	37	37	37	37	37	37	37	37	37	37	37	37	37	37	37	37	34	37	36	32	37	33	0	37	0	0
		5:12	22.6	Non-Exposed	38	38	38	38	38	38	38	38	38	38	38	38	38	38	38	38	38	38	38	38	38	38	38	38	38	38	38	38	38	38	38	38	38	38	38	38	38	38	38	38	38	38
				Exposed	38	38	38	38	38	38	38	38	38	38	38	38	38	38	38	38	38	38	38	38	38	38	38	38	38	38	38	38	38	38	38	38	38	38	38	36	38	37	33	38	34	0
		6:12	26.6	Non-Exposed	39	39	39	39	39	39	39	39	39	39	39	39	39	39	39	39	39	39	39	39	39	39	39	39	39	39	39	39	39	39	39	39	39	39	39	39	39	39	39	39	39	39
				Exposed	39	39	39	39	39	39	39	39	39	39	39	39	39	39	39	39	39	39	39	39	39	39	39	39	39	39	39	39	39	39	39	39	39	39	39	36	39	37	33	39	34	0
		7:12	30.3	Non-Exposed	41	41	41	41	41	41	41	41	41	41	41	41	41	41	41	41	41	41	41	41	41	41	41	41	41	41	41	41	41	41	41	41	41	41	41	41	41	41	41	41	41	41
				Exposed	41	41	41	41	41	41	41	41	41	41	41	41	41	41	41	41	41	41	41	41	41	41	41	41	41	41	41	41	41	37	40	41	35	41	41	34	41	41	0	41	41	0
		8:12	33.7	Non-Exposed	42	42	42	42	42	42	42	42	42	42	42	42	42	42	42	42	42	42	42	42	42	42	42	42	42	42	42	42	42	42	41	41	41	41	41	41	40	40	38	39	39	36
				Exposed	42	42	42	42	42	42	42	42	42	42	42	42	42	42	42	42	42	42	42	42	42	42	42	42	42	42	41	42	42	37	41	39	34	40	37	32	37	34	0	34	0	0
		9:12	36.9	Non-Exposed	44	44	44	44	44	44	44	44	44	44	44	44	44	44	44	44	44	44	44	44	44	44	44	44	44	44	44	44	44	44	43	43	43	42	42	41	41	41	38	40	40	36
				Exposed	44	44	44	44	44	44	44	44	44	44	44	44	44	44	44	44	44	44	44	44	44	44	44	44	44	44	41	44	43	37	43	39	34	40	37	32	37	34	0	34	0	0
		10:12	39.8	Non-Exposed	47	47	47	47	47	47	47	47	47	47	47	47	47	47	47	47	47	47	47	47	47	47	47	47	46	46	46	45	45	45	44	44	44	43	43	41	42	42	38	42	41	36
				Exposed	47	47	47	47	47	47	47	47	47	47	47	47	47	47	47	47	47	47	47	47	46	47	47	44	46	46	40	45	42	37	43	39	34	39	36	0	37	34	0	34	0	0
		11:12	42.5	Non-Exposed	49	49	49	49	49	49	49	49	49	49	49	49	49	49	49	49	49	49	49	49	49	49	49	49	48	48	48	47	47	47	46	46	44	45	45	41	44	43	38	43	41	36
				Exposed	49	49	49	49	49	49	49	49	49	49	49	49	49	49	49	49	49	49	49	49	46	49	49	44	48	46	40	46	42	37	43	39	34	39	36	0	37	34	0	34	0	0
		12:12	45	Non-Exposed	51	51	51	51	51	51	51	51	51	51	51	51	51	51	51	51	51	51	51	51	51	51	51	51	50	50	50	49	49	47	47	47	44	46	46	41	45	43	38	44	41	36
				Exposed	51	51	51	51	51	51	51	51	51	51	51	51	51	51	51	51	51	49	51	51	46	51	50	44	50	46	40	46	42	37	42	39	34	39	36	0	37	34	0	34	0	0
	C	Flat	0	Non-Exposed	44	44	44	44	44	44	44	44	44	44	44	44	44	44	44	44	44	44	44	44	44	44	44	44	44	44	44	44	44	42	44	44	38	44	43	36	44	40	33	44	38	0
				Exposed	44	44	44	44	44	44	44	44	44	44	44	44	44	44	44	44	44	43	44	44	41	44	44	39	44	43	35	44	39	32	44	36	0	41	34	0	38	0	0	35	0	0
		1:12	4.8	Non-Exposed	41	41	41	41	41	41	41	41	41	41	41	41	41	41	41	41	41	41	41	41	41	41	41	41	41	41	41	41	41	41	41	41	38	41	41	35	41	40	33	41	38	0
				Exposed	41	41	41	41	41	41	41	41	41	41	41	41	41	41	41	41	41	41	41	41	40	41	41	38	41	41	35	41	39	32	41	36	0	41	34	0	38	0	0	35	0	0
		2:12	9.5	Non-Exposed	39	39	39	39	39	39	39	39	39	39	39	39	39	39	39	39	39	39	39	39	39	39	39	39	39	39	39	39	39	39	39	39	36	39	37	33	39	35	0	39	32	0
				Exposed	39	39	39	39	39	39	39	39	39	39	39	39	39	39	39	39	39	39	39	39	38	39	39	36	39	37	33	39	34	0	39	0	0	36	0	0	34	0	0	0	0	0
		3:12	14.0	Non-Exposed	37	37	37	37	37	37	37	37	37	37	37	37	37	37	37	37	37	37	37	37	37	37	37	37	37	37	37	37	37	37	37	37	36	37	37	33	37	35	0	37	32	0
				Exposed	37	37	37	37	37	37	37	37	37	37	37	37	37	37	37	37	37	37	37	37	36	37	37	33	37	34	0	36	0	0	37	0	0	36	0	0	34	0	0	0	0	0
		4:12	18.4	Non-Exposed	37	37	37	37	37	37	37	37	37	37	37	37	37	37	37	37	37	37	37	37	37	37	37	37	37	37	37	37	37	37	37	37	36	37	37	33	37	34	0	37	32	0
				Exposed	37	37	37	37	37	37	37	37	37	37	37	37	37	37	37	37	37	37	37	37	36	37	37	33	37	34	0	36	0	0	34	0	0	36	0	0	34	0	0	0	0	0
		5:12	22.6	Non-Exposed	38	38	38	38	38	38	38	38	38	38	38	38	38	38	38	38	38	38	38	38	38	38	38	38	38	38	38	38	38	38	38	38	38	38	38	38	38	38	35	38	36	33
				Exposed	38	38	38	38	38	38	38	38	38	38	38	38	38	38	38	38	38	38	38	38	38	38	38	38	38	38	37	38	38	34	38	35	31	38	32	0	38	0	0	37	0	0
		6:12	26.6	Non-Exposed	39	39	39	39	39	39	39	39	39	39	39	39	39	39	39	39	39	39	39	39	39	39	39	39	39	39	39	39	39	39	39	39	39	39	39	38	39	38	35	39	36	33
				Exposed	39	39	39	39	39	39	39	39	39	39	39	39	39	39	39	39	39	39	39	39	39	39	39	39	39	39	37	39	37	34	39	35	0	39	32	0	39	0	0	37	0	0
		7:12	30.3	Non-Exposed	41	41	41	41	41	41	41	41	41	41	41	41	41	41	41	41	41	41	41	41	41	41	41	41	41	41	41	41	41	41	40	40	40	39	39	39	39	39	38	38	38	36
				Exposed	41	41	41	41	41	41	41	41	41	41	41	41	41	41	41	41	41	41	41	41	41	41	41	41	41	41	41	41	41	37	40	39	35	39	37	32	37	34	0	34	32	0
		8:12	33.7	Non-Exposed	42	42	42	42	42	42	42	42	42	42	42	42	42	42	42	42	42	42	42	42	42	42	42	42	42	42	42	42	42	42	41	41	41	41	41	41	40	40	38	39	39	36
				Exposed	42	42	42	42	42	42	42	42	42	42	42	42	42	42	42	42	42	42	42	42	42	42	42	42	42	42	41	42	42	37	41	39	34	40	37	32	37	34	0	34	0	0
		9:12	36.9	Non-Exposed	44	44	44	44	44	44	44	44	44	44	44	44	44	44	44	44	44	44	44	44	44	44	44	44	44	44	44	44	44	44	43	43	43	42	42	41	41	41	38	40	40	36
				Exposed	44	44	44	44	44	44	44	44	44	44	44	44	44	44	44	44	44	44	44	44	44	44	44	44	44	44	41	44	43	37	43	39	34	40	37	32	37	34	0	34	0	0
		10:12	39.8	Non-Exposed	47	47	47	47	47	47	47	47	47	47	47	47	47	47	47	47	47	47	47	47	47	47	47	47	46	46	46	45	45	45	44	44	44	43	43	41	42	42	38	42	41	36
				Exposed	47	47	47	47	47	47	47	47	47	47	47	47	47	47	47	47	47	47	47	47	46	47	47	44	46	46	40	45	42	37	43	39	34	39	36	0	37	34	0	34	0	0
		11:12	42.5	Non-Exposed	49	49	49	49	49	49	49	49	49	49	49	49	49	49	49	49	49	49	49	49	49	49	49	49	48	48	48	47	47	47	46	46	44	45	45	41	44	43	38	43	41	36
				Exposed	49	49	49	49	49	49	49	49	49	49	49	49	49	49	49	49	49	49	49	49	46	49	49	44	48	46	40	46	42	37	43	39	34	39	36	0	37	34	0	34	0	0
		12:12	45	Non-Exposed	51	51	51	51	51	51	51	51	51	51	51	51	51	51	51	51	51	51	51	51	51	51	51	51	50	50	50	49	49	47	47	47	44	46	46	41	45	43	38	44	41	36
				Exposed	51	51	51	51	51	51	51	51	51	51	51	51	51	51	51	51	51	49	51	51	46	51	50	44	50	46	40	46	42	37	42	39	34	39	36	0	37	34	0	34	0	0
	D	Flat	0	Non-Exposed	44	44	44	44	44	44	44	44	44	44	44	44	44	44	44	44	44	44	44	44	44	44	44	44	44	44	41	44	44	37	44	42	35	44	39	32	44	36	0	41	34	0
				Exposed	44	44	44	44	44	44	44	44	44	44	44	43	44	44	40	44	44	38	44	44	36	44	42	35	44	39	0	43	36	0	39	33	0	37	0	0	34	0	0	32	0	0
		1:12	4.8	Non-Exposed	41	41	41	41	41	41	41	41	41	41	41	41	41	41	41	41	41	41	41	41	41	41	41	41	41	41	41	41	41	37	41	41	34	41	39	32	41	36	0	41	34	0
				Exposed	41	41	41	41	41	41	41	41	41	41	41	41	41	41	40	41	41	38	41	41	36	41	41	35	41	39	0	41	35	0	39	33	0	37	0	0	34	0	0	0	0	0
		2:12	9.5	Non-Exposed	39	39	39	39	39	39	39	39	39	39	39	39	39	39	39	39	39	39	39	39	39	39	39	39	39	39	38	39	39	35	39	36	32	39	33	0	39	0	0	36	0	0
				Exposed	39	39	39	39	39	39	39	39	39	39	39	39	39	39	38	39	39	36	39	38	34	39	36	32	39	33	0	38	0	0	35	0	0	33	0	0	0	0	0	0	0	0
		3:12	14.0	Non-Exposed	37	37	37	37	37	37	37	37	37	37	37	37	37	37	37	37	37	37	37	37	37	37	37	37	37	37	37	37	37	35	37	36	32	37	33	0	37	0	0	36	0	0
				Exposed	37	37	37	37	37	37	37	37	37	37	37	37	37	37	37	37	37	36	37	37	34	37	36	32	37	33	0	37	0	0	35	0	0	33	0	0	0	0	0	0	0	0
		4:12	18.4	Non-Exposed	37	37	37	37	37	37	37	37	37	37	37	37	37	37	37	37	37	37	37	37	37	37	37	37	37	37	37	37	37	35	37	36	32	37	33	0	37	0	0	36	0	0
				Exposed	37	37	37	37	37	37	37	37	37	37	37	37	37	37	37	37	37	36	37	37	34	37	36	32	37	33	0	37	0	0	35	0	0	0	0	0	0	0	0	0	0	0
		5:12	22.6	Non-Exposed	38	38	38	38	38	38	38	38	38	38	38	38	38	38	38	38	38	38	38	38	38	38	38	38	38	38	38	38	38	38	38	38	36	38	37	34	38	35	31	38	32	0
				Exposed	38	38	38	38	38	38	38	38	38	38	38	38	38	38	38	38	38	38	38	38	37	38	37	33	38	34	0	38	0	0	38	0	0	36	0	0	34	0	0	34	0	0
		6:12	26.6	Non-Exposed	39	39	39	39	39	39	39	39	39	39	39	39	39	39	39	39	39	39	39	39	39	39	39	39	39	39	39	39	39	39	39	39	36	39	37	34	39	35	0	39	32	0
				Exposed	39	39	39	39	39	39	39	39	39	39	39	39	39	39	39	39	39	39	39	39	37	39	37	33	39	34	0	39	0	0	38	0	0	36	0	0	34	0	0	34	0	0
		7:12	30.3	Non-Exposed	41	41	41	41	41	41	41	41	41	41	41	41	41	41	41	41	41	41	41	41	41	41	41	41	41	41	41	40	40	40	39	39	39	38	38	37	38	38	35	37	37	32
				Exposed	41	41	41	41	41	41	41	41	41	41	41	41	41	41	41	41	41	41	41	41	41	41	41	40	41	41	37	40	39	34	38	36	0	36	33	0	33	0	0	0	0	0
		8:12	33.7	Non-Exposed	42	42	42	42	42	42	42	42	42	42	42	42	42	42	42	42	42	42	42	42	42	42	42	42	42	42	42	41	41	41	40	40	40	39	39	37	39	39	34	38	37	32
				Exposed	42	42	42	42	42	42	42	42	42	42	42	42	42	42	42	42	42	42	42	42	42	42	42	40	42	42	37	41	38	34	38	36	0	36	33	0	33	0	0	0	0	0
		9:12	36.9	Non-Exposed	44	44	44	44	44	44	44	44	44	44	44	44	44	44	44	44	44	44	44	44	44	44	44	44	43	43	43	43	43	43	42	42	40	41	41	37	40	39	34	39	37	32
				Exposed	44	44	44	44	44	44	44	44	44	44	44	44	44	44	44	44	44	44	44	44	42	44	44	40	43	42	37	42	38	34	38	35	0	35	33	0	33	0	0	0	0	0
		10:12	39.8	Non-Exposed	47	47	47	47	47	47	47	47	47	47	47	47	47	47	47	47	47	47	46	46	46	46	45	45	45	44	44	43	43	43	40	42	42	37	41	39	34	40	37	32
				Exposed	47	47	47	47	47	47	47	47	47	47	47	47	47	46	47	47	44	46	46	42	46	46	40	45	42	37	42	38	34	38	35	0	35	33	0	33	0	0	0	0	0
		11:12	42.5	Non-Exposed	49	49	49	49	49	49	49	49	49	49	49	49	49	49	49	49	49	49	48	48	48	48	47	47	47	46	46	43	44	44	40	43	42	37	42	39	34	40	37	32
				Exposed	49	49	49	49	49	49	49	49	49	49	49	49	49	46	49	49	44	48	48	42	48	46	40	45	42	36	41	38	34	38	35	0	35	33	0	33	0	0	0	0	0
		12:12	45	Non-Exposed	51	51	51	51	51	51	51	51	51	51	51	51	51	51	51	51	51	50	50	50	49	49	49	48	48	47	47	47	43	46	45	40	45	42	37	43	39	34	40	37	32
				Exposed	51	51	51	51	51	51	51	51	51	51	51	49	51	51	46	51	50	44	50	48	42	49	45	40	45	42	36	41	38	33	38	35	0	35	33	0	33	0	0	0	0	0

Tamarack 2.3 Rail – Gable Flush-Mount on 30 Foot Maximum Mean Roof Height – Portrait – Panel Length = 96 Inches or Less

Ground Snow Load	Exposure Category	Roof Pitch	Roof Angle	Wind Speed (mph)	95			100			105			110			115			120			125			130			140			150			160			170			180			190		
				Roof Area	1	2	3	1	2	3	1	2	3	1	2	3	1	2	3	1	2	3	1	2	3	1	2	3	1	2	3	1	2	3	1	2	3	1	2	3	1	2	3	1	2	3
50	B	Flat	0	Non-Exposed	42	42	42	42	42	42	42	42	42	42	42	42	42	42	42	42	42	42	42	42	42	42	42	42	42	42	42	42	42	42	42	42	42	42	42	42	42	42	41	42	42	38
				Exposed	42	42	42	42	42	42	42	42	42	42	42	42	42	42	42	42	42	42	42	42	42	42	42	42	42	42	42	42	42	40	42	42	37	42	41	34	42	39	32	42	36	0
		1:12	4.8	Non-Exposed	39	39	39	39	39	39	39	39	39	39	39	39	39	39	39	39	39	39	39	39	39	39	39	39	39	39	39	39	39	39	39	39	39	39	39	39	39	39	39	39	39	38
				Exposed	39	39	39	39	39	39	39	39	39	39	39	39	39	39	39	39	39	39	39	39	39	39	39	39	39	39	39	39	39	39	39	39	37	39	39	34	39	39	0	39	36	0
		2:12	9.5	Non-Exposed	37	37	37	37	37	37	37	37	37	37	37	37	37	37	37	37	37	37	37	37	37	37	37	37	37	37	37	37	37	37	37	37	37	37	37	37	37	37	37	37	37	36
				Exposed	37	37	37	37	37	37	37	37	37	37	37	37	37	37	37	37	37	37	37	37	37	37	37	37	37	37	37	37	37	37	37	37	34	37	36	32	37	33	0	37	0	0
		3:12	14.0	Non-Exposed	35	35	35	35	35	35	35	35	35	35	35	35	35	35	35	35	35	35	35	35	35	35	35	35	35	35	35	35	35	35	35	35	35	35	35	35	35	35	35	35	35	35
				Exposed	35	35	35	35	35	35	35	35	35	35	35	35	35	35	35	35	35	35	35	35	35	35	35	35	35	35	35	35	35	35	35	35	34	35	35	32	35	33	0	35	0	0
		4:12	18.4	Non-Exposed	35	35	35	35	35	35	35	35	35	35	35	35	35	35	35	35	35	35	35	35	35	35	35	35	35	35	35	35	35	35	35	35	35	35	35	35	35	35	35	35	35	35
				Exposed	35	35	35	35	35	35	35	35	35	35	35	35	35	35	35	35	35	35	35	35	35	35	35	35	35	35	35	35	35	35	35	35	34	35	35	32	35	33	0	35	0	0
		5:12	22.6	Non-Exposed	36	36	36	36	36	36	36	36	36	36	36	36	36	36	36	36	36	36	36	36	36	36	36	36	36	36	36	36	36	36	36	36	36	36	36	36	36	36	36	36	36	36
				Exposed	36	36	36	36	36	36	36	36	36	36	36	36	36	36	36	36	36	36	36	36	36	36	36	36	36	36	36	36	36	36	36	36	36	36	36	36	36	36	33	36	34	0
		6:12	26.6	Non-Exposed	37	37	37	37	37	37	37	37	37	37	37	37	37	37	37	37	37	37	37	37	37	37	37	37	37	37	37	37	37	37	37	37	37	37	37	37	37	37	37	37	37	37
				Exposed	37	37	37	37	37	37	37	37	37	37	37	37	37	37	37	37	37	37	37	37	37	37	37	37	37	37	37	37	37	37	37	37	37	37	37	37	37	37	33	37	34	0
		7:12	30.3	Non-Exposed	39	39	39	39	39	39	39	39	39	39	39	39	39	39	39	39	39	39	39	39	39	39	39	39	39	39	39	39	39	39	39	39	39	39	39	39	39	39	39	39	39	39
				Exposed	39	39	39	39	39	39	39	39	39	39	39	39	39	39	39	39	39	39	39	39	39	39	39	39	39	39	39	39	39	39	39	39	39	39	39	39	39	39	37	39	39	34
		8:12	33.7	Non-Exposed	40	40	40	40	40	40	40	40	40	40	40	40	40	40	40	40	40	40	40	40	40	40	40	40	40	40	40	40	40	40	40	40	40	40	40	40	40	40	40	40	40	40
				Exposed	40	40	40	40	40	40	40	40	40	40	40	40	40	40	40	40	40	40	40	40	40	40	40	40	40	40	40	40	40	39	40	40	37	40	39	34	40	39	34	40	39	34
		9:12	36.9	Non-Exposed	42	42	42	42	42	42	42	42	42	42	42	42	42	42	42	42	42	42	42	42	42	42	42	42	42	42	42	42	42	42	42	42	42	42	42	42	41	42	41	41	41	41
				Exposed	42	42	42	42	42	42	42	42	42	42	42	42	42	42	42	42	42	42	42	42	42	42	42	42	42	42	42	42	42	39	42	42	37	42	42	39	42	42	37	41	39	34
		10:12	39.8	Non-Exposed	44	44	44	44	44	44	44	44	44	44	44	44	44	44	44	44	44	44	44	44	44	44	44	44	44	44	44	44	44	44	44	44	44	44	44	44	43	43	43	43	43	43
				Exposed	44	44	44	44	44	44	44	44	44	44	44	44	44	44	44	44	44	44	44	44	44	44	44	44	44	44	44	44	44	42	44	44	39	43	42	37	43	42	37	42	39	34
		11:12	42.5	Non-Exposed	47	47	47	47	47	47	47	47	47	47	47	47	47	47	47	47	47	47	47	47	47	47	47	47	47	47	47	47	47	47	47	47	47	46	46	46	45	45	45	44	44	44
				Exposed	47	47	47	47	47	47	47	47	47	47	47	47	47	47	47	47	47	47	47	47	47	47	47	47	47	47	47	47	47	42	47	47	42	46	45	39	45	42	37	42	39	34
		12:12	45	Non-Exposed	49	49	49	49	49	49	49	49	49	49	49	49	49	49	49	49	49	49	49	49	49	49	49	49	49	49	49	49	49	49	48	48	48	48	48	48	47	47	47	46	46	44
				Exposed	49	49	49	49	49	49	49	49	49	49	49	49	49	49	49	49	49	49	49	49	49	49	49	49	49	49	49	49	49	46	48	48	42	48	45	39	45	42	36	42	39	34
	C	Flat	0	Non-Exposed	42	42	42	42	42	42	42	42	42	42	42	42	42	42	42	42	42	42	42	42	42	42	42	42	42	42	42	42	42	42	42	42	38	42	42	36	42	40	33	42	38	0
				Exposed	42	42	42	42	42	42	42	42	42	42	42	42	42	42	42	42	42	41	42	42	39	42	42	35	42	39	32	42	36	0	41	34	0	38	0	0	35	0	0	0	0	0
		1:12	4.8	Non-Exposed	39	39	39	39	39	39	39	39	39	39	39	39	39	39	39	39	39	39	39	39	39	39	39	39	39	39	39	39	39	39	39	39	38	39	39	35	39	39	33	39	38	0
				Exposed	39	39	39	39	39	39	39	39	39	39	39	39	39	39	39	39	39	39	39	39	39	39	39	38	39	39	35	39	39	32	39	36	0	39	34	0	38	0	0	35	0	0
		2:12	9.5	Non-Exposed	37	37	37	37	37	37	37	37	37	37	37	37	37	37	37	37	37	37	37	37	37	37	37	37	37	37	37	37	37	37	37	37	36	37	37	33	37	35	0	37	32	0
				Exposed	37	37	37	37	37	37	37	37	37	37	37	37	37	37	37	37	37	37	37	37	36	37	37	33	37	34	0	37	0	0	36	0	0	34	0	0	0	0	0	0	0	0
		3:12	14.0	Non-Exposed	35	35	35	35	35	35	35	35	35	35	35	35	35	35	35	35	35	35	35	35	35	35	35	35	35	35	35	35	35	35	35	35	35	35	35	33	35	35	0	35	32	0
				Exposed	35	35	35	35	35	35	35	35	35	35	35	35	35	35	35	35	35	35	35	35	35	35	35	33	35	34	0	35	0	0	35	0	0	34	0	0	0	0	0	0	0	0
		4:12	18.4	Non-Exposed	35	35	35	35	35	35	35	35	35	35	35	35	35	35	35	35	35	35	35	35	35	35	35	35	35	35	35	35	35	35	35	35	35	35	35	33	35	34	0	35	32	0
				Exposed	35	35	35	35	35	35	35	35	35	35	35	35	35	35	35	35	35	35	35	35	35	35	35	33	35	34	0	35	0	0	35	0	0	34	0	0	0	0	0	0	0	0
		5:12	22.6	Non-Exposed	36	36	36	36	36	36	36	36	36	36	36	36	36	36	36	36	36	36	36	36	36	36	36	36	36	36	36	36	36	36	36	36	35	36	36	36	36	36	33	36	36	33
				Exposed	36	36	36	36	36	36	36	36	36	36	36	36	36	36	36	36	36	36	36	36	36	36	36	36	36	36	34	36	35	31	36	32	0	36	0	0	36	0	0	0	0	0
		6:12	26.6	Non-Exposed	37	37	37	37	37	37	37	37	37	37	37	37	37	37	37	37	37	37	37	37	37	37	37	37	37	37	37	37	37	37	37	37	35	37	37	37	37	37	37	37	36	33
				Exposed	37	37	37	37	37	37	37	37	37	37	37	37	37	37	37	37	37	37	37	37	37	37	37	37	37	37	34	37	35	0	37	32	0	37	0	0	37	0	0	0	0	0
		7:12	30.3	Non-Exposed	39	39	39	39	39	39	39	39	39	39	39	39	39	39	39	39	39	39	39	39	39	39	39	39	39	39	39	39	39	39	39	39	38	38	38	37	37	37	37	37	37	36
				Exposed	39	39	39	39	39	39	39	39	39	39	39	39	39	39	39	39	39	39	39	39	39	39	39	39	39	39	37	39	39	35	38	37	32	37	34	0	34	32	0	34	32	0
		8:12	33.7	Non-Exposed	40	40	40	40	40	40	40	40	40	40	40	40	40	40	40	40	40	40	40	40	40	40	40	40	40	40	40	40	40	40	40	40	40	39	39	39	39	39	38	38	38	36
				Exposed	40	40	40	40	40	40	40	40	40	40	40	40	40	40	40	40	40	40	40	40	40	40	40	40	40	40	37	40	39	34	39	37	32	37	34	0	34	0	0	34	0	0
		9:12	36.9	Non-Exposed	42	42	42	42	42	42	42	42	42	42	42	42	42	42	42	42	42	42	42	42	42	42	42	42	42	42	42	42	42	42	41	41	41	41	41	41	40	40	38	39	39	36
				Exposed	42	42	42	42	42	42	42	42	42	42	42	42	42	42	42	42	42	42	42	42	42	42	42	42	42	42	37	41	39	34	40	37	32	37	34	0	34	0	0	0	0	0
		10:12	39.8	Non-Exposed	44	44	44	44	44	44	44	44	44	44	44	44	44	44	44	44	44	44	44	44	44	44	44	44	44	44	44	43	43	43	42	42	41	41	41	38	40	40	36	36	36	33
				Exposed	44	44	44	44	44	44	44	44	44	44	44	44	44	44	44	44	44	44	44	44	44	44	44	44	40	44	42	37	43	39	34	39	36	0	37	34	0	34	0	0	0	0
		11:12	42.5	Non-Exposed	47	47	47	47	47	47	47	47	47	47	47	47	47	47	47	47	47	47	47	47	47	47	47	46	46	46	45	45	45	44	44	44	43	43	41	43	43	38	42	41	36	36
				Exposed	47	47	47	47	47	47	47	47	47	47	47	47	47	47	47	47	47	47	47	47	46	47	47	44	46	46	40	45	42	37	43	39	34	39	36	0	37	34	0	34	0	0
		12:12	45	Non-Exposed	49	49	49	49	49	49	49	49	49	49	49	49	49	49	49	49	49	49	49	49	49	49	49	49	48	48	48	47	47	47	46	46	44	45	45	41	44	43	38	43	41	36
				Exposed	49	49	49	49	49	49	49	49	49	49	49	49	49	49	49	49	49	49	49	49	46	49	49	44	48	46	40	46	42	37	42	39	34	39	36	0	37	34	0	34	0	0
	D	Flat	0	Non-Exposed	42	42	42	42	42	42	42	42	42	42	42	42	42	42	42	42	42	42	42	42	42	42	42	42	42	42	41	42	42	37	42	42	35	42	39	32	42	36	0	41	34	0
				Exposed	42	42	42	42	42	42	42	42	42	42	42	42	42	42	40	42	42	38	42	42	36	42	42	35	42	39	0	42	36	0	39	33	0	37	0	0	34	0	0	32	0	0
		1:12	4.8	Non-Exposed	39	39	39	39	39	39	39	39	39	39	39	39	39	39	39	39	39	39	39	39	39	39	39	39	39	39	39	39	39	37	39	39	34	39	39	32	39	36	0	39	34	0
				Exposed	39	39	39	39	39	39	39	39	39	39	39	39	39	39	39	39	39	38	39	39	36	39	39	35	39	39	0	39	35	0	39	33	0	37	0	0	34	0	0	0	0	0
		2:12	9.5	Non-Exposed	37	37	37	37	37	37	37	37	37	37	37	37	37	37	37	37	37	37	37	37	37	37	37	37	37	37	37	37	37	35	37	36	32	37	33	0	37	0	0	36	0	0
				Exposed	37	37	37	37	37	37	37	37	37	37	37	37	37	37	37	37	37	36	37	37	34	37	36	32	37	33	0	37	0	0	35	0	0	33	0	0	0	0	0	0	0	0
		3:12	14.0	Non-Exposed	35	35	35	35	35	35	35	35	35	35	35	35	35	35	35	35	35	35	35	35	35	35	35	35	35	35	35	35	35	32	35	33	0	35	0	0	35	0	0	35	0	0
				Exposed	35	35	35	35	35	35	35	35	35	35	35	35	35	35	35	35	35	34	35	35	32	35	33	0	35	0	0	35	0	0	33	0	0	0	0	0	0	0	0	0	0	0
		4:12	18.4	Non-Exposed	35	35	35	35	35	35	35	35	35	35	35	35	35	35	35	35	35	35	35	35	35	35	35	35	35	35	35	35	35	32	35	33	0	35	0	0	35	0	0	35	0	0
				Exposed	35	35	35	35	35	35	35	35	35	35	35	35	35	35	35	35	35	34	35	35	32	35	33	0	35	0	0	35	0	0	0	0	0	0	0	0	0	0	0	0	0	0
		5:12	22.6	Non-Exposed	36	36	36	36	36	36	36	36	36	36	36	36	36	36	36	36	36	36	36	36	36	36	36	36	36	36	36	36	36	36	36	36	34	36	35	31	36	32	0	36	0	0
				Exposed	36	36	36	36	36	36	36	36	36	36	36	36	36	36	36	36	36	36	36	36	36	36	36	36	36	36	36	36	36	34	36	36	0	36	0	0	36	0	0	34	0	0
		6:12	26.6	Non-Exposed	37	37	37	37	37	37	37	37	37	37	37	37	37	37	37	37	37	37	37	37	37	37	37	37	37	37	37	37	37	37	37	37	34	37	35	0	37	34	0	37	32	0
				Exposed	37	37	37	37	37	37	37	37	37	37	37	37	37	37	37	37	37	37	37	37	37	37	37	33	37	34	0	37	0	0	37	0	0	36	0	0	34	0	0	34	0	0
		7:12	30.3	Non-Exposed	39	39	39	39	39	39	39	39	39	39	39	39	39	39	39	39	39	39	39	39	39	39	39	39	39	39	39	39	39	38	38	38	37	37	37	36	36	35	36	36	36	32
				Exposed	39	39	39	39	39	39	39	39	39	39	39	39	39	39	39	39	39	39	39	39	39	39	39	37	39	39	34	38	36	0	36	33	0	33	0	0	0	0	0	0	0	0
		8:12	33.7	Non-Exposed	40	40	40	40	40	40	40	40	40	40	40	40	40	40	40	40	40	40	40	40	40	40	40	40	40	40	40	40	39	39	39	38	38	37	37	37	34	37	37	32	37	32
				Exposed	40	40	40	40	40	40	40	40	40	40	40	40	40	40	40	40	40	40	40	40	40	40	40	37	40	38	34	38	36	0	36	33	0	33	0	0	0	0	0	0	0	0
		9:12	36.9	Non-Exposed	42	42	42	42	42	42	42	42	42	42	42	42	42	42	42	42	42	42	42	42	42	42	42	42	42	41	41	40	40	40	39	39	37	39	39	34	38	37	32	37	32	0
				Exposed	42	42	42	42	42	42	42	42	42	42	42	42	42	42	42	42	42	42	42	42	42	42	42	40	42	42	37	41	38	34	38	35	0	35	33	0	33	0	0	0	0	0
		10:12	39.8	Non-Exposed	44	44	44	44	44	44	44	44	44	44	44	44	44	44	44	44	44	44	44	44	44	44	44	43	43	43	43	43	42	42	40	41	41	37	40	39	34	39	37	32	37	32
				Exposed	44	44	44	44	44	44	44	44	44	44	44	44	44	44	44	44	44	44	44	44	42	44	44	40	43	42	37	42	38	34	38	35	0	35	33	0	33	0	0	0	0	0
		11:12	42.5	Non-Exposed	47	47	47	47	47	47	47	47	47	47	47	47	47	47	47	47	47	47	47	47	47	46	46	46	45	45	45	44	44	43	43	43	40	42	42	37	41	39	34	40	37	32
				Exposed	47	47	47	47	47	47	47	47	47	47	47	47	47	47	46	47	47	44	47	47	42	46	46	40	45	42	36	41	38	34	38	35	0	35	33	0	33	0	0	0	0	0
		12:12	45	Non-Exposed	49	49	49	49	49	49	49	49	49	49	49	49	49	49	49	49	49	49	49	49	48	48	48	48	47	47	47	46	46	43	45	45	40	43	42	37	42	39	34	40	37	32
				Exposed	49	49	49	49	49	49	49	49	49	49	49	49	49	49	46	49	49	44	48	48	42	48	45	40	45	42	36	41	38	33	38	35	0	35	33	0	33	0	0	0	0	0

Tamarack 2.3 Rail – Gable Flush-Mount on 30 Foot Maximum Mean Roof Height – Portrait – Panel Length = 96 Inches or Less

Ground Snow Load	Exposure Category	Roof Pitch	Roof Angle	Wind Speed (mph)	95			100			105			110			115			120			125			130			140			150			160			170			180			190		
				Roof Area	1	2	3	1	2	3	1	2	3	1	2	3	1	2	3	1	2	3	1	2	3	1	2	3	1	2	3	1	2	3	1	2	3	1	2	3	1	2	3	1	2	3
55	B	Flat	0	Non-Exposed	40	40	40	40	40	40	40	40	40	40	40	40	40	40	40	40	40	40	40	40	40	40	40	40	40	40	40	40	40	40	40	40	40	40	40	40	40	40	40	40	40	38
				Exposed	40	40	40	40	40	40	40	40	40	40	40	40	40	40	40	40	40	40	40	40	40	40	40	40	40	40	40	40	40	40	40	40	37	40	40	34	40	39	32	40	36	0
		1:12	4.8	Non-Exposed	37	37	37	37	37	37	37	37	37	37	37	37	37	37	37	37	37	37	37	37	37	37	37	37	37	37	37	37	37	37	37	37	37	37	37	37	37	37	37	37	37	37
				Exposed	37	37	37	37	37	37	37	37	37	37	37	37	37	37	37	37	37	37	37	37	37	37	37	37	37	37	37	37	37	37	37	37	37	37	37	34	37	37	0	37	36	0
		2:12	9.5	Non-Exposed	35	35	35	35	35	35	35	35	35	35	35	35	35	35	35	35	35	35	35	35	35	35	35	35	35	35	35	35	35	35	35	35	35	35	35	35	35	35	35	35	35	35
				Exposed	35	35	35	35	35	35	35	35	35	35	35	35	35	35	35	35	35	35	35	35	35	35	35	35	35	35	35	35	35	35	35	35	34	35	35	32	35	33	0	35	0	0
		3:12	14.0	Non-Exposed	34	34	34	34	34	34	34	34	34	34	34	34	34	34	34	34	34	34	34	34	34	34	34	34	34	34	34	34	34	34	34	34	34	34	34	34	34	34	34	34	34	34
				Exposed	34	34	34	34	34	34	34	34	34	34	34	34	34	34	34	34	34	34	34	34	34	34	34	34	34	34	34	34	34	34	34	34	34	34	34	32	34	33	0	34	0	0
		4:12	18.4	Non-Exposed	34	34	34	34	34	34	34	34	34	34	34	34	34	34	34	34	34	34	34	34	34	34	34	34	34	34	34	34	34	34	34	34	34	34	34	34	34	34	34	34	34	34
				Exposed	34	34	34	34	34	34	34	34	34	34	34	34	34	34	34	34	34	34	34	34	34	34	34	34	34	34	34	34	34	34	34	34	34	34	34	32	34	33	0	34	0	0
		5:12	22.6	Non-Exposed	35	35	35	35	35	35	35	35	35	35	35	35	35	35	35	35	35	35	35	35	35	35	35	35	35	35	35	35	35	35	35	35	35	35	35	35	35	35	35	35	35	35
				Exposed	35	35	35	35	35	35	35	35	35	35	35	35	35	35	35	35	35	35	35	35	35	35	35	35	35	35	35	35	35	35	35	35	35	35	35	35	35	35	33	35	34	0
		6:12	26.6	Non-Exposed	36	36	36	36	36	36	36	36	36	36	36	36	36	36	36	36	36	36	36	36	36	36	36	36	36	36	36	36	36	36	36	36	36	36	36	36	36	36	36	36	36	36
				Exposed	36	36	36	36	36	36	36	36	36	36	36	36	36	36	36	36	36	36	36	36	36	36	36	36	36	36	36	36	36	36	36	36	36	36	36	36	36	36	33	36	34	0
		7:12	30.3	Non-Exposed	37	37	37	37	37	37	37	37	37	37	37	37	37	37	37	37	37	37	37	37	37	37	37	37	37	37	37	37	37	37	37	37	37	37	37	37	37	37	37	37	37	37
				Exposed	37	37	37	37	37	37	37	37	37	37	37	37	37	37	37	37	37	37	37	37	37	37	37	37	37	37	37	37	37	37	37	37	37	37	37	34	37	37	0	37	36	0
		8:12	33.7	Non-Exposed	39	39	39	39	39	39	39	39	39	39	39	39	39	39	39	39	39	39	39	39	39	39	39	39	39	39	39	39	39	39	39	39	39	39	39	39	39	39	39	39	39	39
				Exposed	39	39	39	39	39	39	39	39	39	39	39	39	39	39	39	39	39	39	39	39	39	39	39	39	39	39	39	39	39	39	39	39	37	39	39	34	39	39	37	39	39	34
		9:12	36.9	Non-Exposed	40	40	40	40	40	40	40	40	40	40	40	40	40	40	40	40	40	40	40	40	40	40	40	40	40	40	40	40	40	40	40	40	40	40	40	40	40	40	40	40	40	40
				Exposed	40	40	40	40	40	40	40	40	40	40	40	40	40	40	40	40	40	40	40	40	40	40	40	40	40	40	40	40	40	40	40	40	40	40	40	39	40	40	37	40	39	34
		10:12	39.8	Non-Exposed	42	42	42	42	42	42	42	42	42	42	42	42	42	42	42	42	42	42	42	42	42	42	42	42	42	42	42	42	42	42	42	42	42	42	42	42	41	41	41	41	41	41
				Exposed	42	42	42	42	42	42	42	42	42	42	42	42	42	42	42	42	42	42	42	42	42	42	42	42	42	42	42	42	42	42	42	42	42	42	42	39	42	42	37	41	39	34
		11:12	42.5	Non-Exposed	45	45	45	45	45	45	45	45	45	45	45	45	45	45	45	45	45	45	45	45	45	45	45	45	45	45	45	45	45	45	45	45	44	44	44	44	43	43	43	43	43	43
				Exposed	45	45	45	45	45	45	45	45	45	45	45	45	45	45	45	45	45	45	45	45	45	45	45	45	45	45	45	45	45	45	45	42	44	44	44	39	44	42	37	42	39	34
		12:12	45	Non-Exposed	47	47	47	47	47	47	47	47	47	47	47	47	47	47	47	47	47	47	47	47	47	47	47	47	47	47	47	47	47	47	47	47	46	46	46	45	45	45	45	45	45	44
				Exposed	47	47	47	47	47	47	47	47	47	47	47	47	47	47	47	47	47	47	47	47	47	47	47	47	47	47	47	47	47	46	47	47	42	46	45	39	45	42	36	42	39	34
	C	Flat	0	Non-Exposed	40	40	40	40	40	40	40	40	40	40	40	40	40	40	40	40	40	40	40	40	40	40	40	40	40	40	40	40	40	40	40	40	38	40	40	36	40	40	33	40	38	0
				Exposed	40	40	40	40	40	40	40	40	40	40	40	40	40	40	40	40	40	40	40	40	39	40	40	35	40	39	32	40	36	0	40	34	0	38	0	0	35	0	0	0	0	0
		1:12	4.8	Non-Exposed	37	37	37	37	37	37	37	37	37	37	37	37	37	37	37	37	37	37	37	37	37	37	37	37	37	37	37	37	37	37	37	37	37	37	37	35	37	37	33	37	37	0
				Exposed	37	37	37	37	37	37	37	37	37	37	37	37	37	37	37	37	37	37	37	37	37	37	37	35	37	37	32	37	36	0	37	34	0	37	0	0	35	0	0	0	0	0
		2:12	9.5	Non-Exposed	35	35	35	35	35	35	35	35	35	35	35	35	35	35	35	35	35	35	35	35	35	35	35	35	35	35	35	35	35	35	35	35	35	35	35	33	35	35	0	35	32	0
				Exposed	35	35	35	35	35	35	35	35	35	35	35	35	35	35	35	35	35	35	35	35	35	35	35	33	35	34	0	35	0	0	35	0	0	34	0	0	0	0	0	0	0	0
		3:12	14.0	Non-Exposed	34	34	34	34	34	34	34	34	34	34	34	34	34	34	34	34	34	34	34	34	34	34	34	34	34	34	34	34	34	34	34	34	34	34	34	33	34	34	0	34	32	0
				Exposed	34	34	34	34	34	34	34	34	34	34	34	34	34	34	34	34	34	34	34	34	34	34	34	33	34	34	0	34	0	0	34	0	0	34	0	0	0	0	0	0	0	0
		4:12	18.4	Non-Exposed	34	34	34	34	34	34	34	34	34	34	34	34	34	34	34	34	34	34	34	34	34	34	34	34	34	34	34	34	34	34	34	34	34	34	34	33	34	34	0	34	32	0
				Exposed	34	34	34	34	34	34	34	34	34	34	34	34	34	34	34	34	34	34	34	34	34	34	34	33	34	34	0	34	0	0	34	0	0	34	0	0	0	0	0	0	0	0
		5:12	22.6	Non-Exposed	35	35	35	35	35	35	35	35	35	35	35	35	35	35	35	35	35	35	35	35	35	35	35	35	35	35	35	35	35	35	35	35	35	35	35	33	35	35	0	35	35	33
				Exposed	35	35	35	35	35	35	35	35	35	35	35	35	35	35	35	35	35	35	35	35	35	35	35	35	35	35	34	35	35	31	35	32	0	35	0	0	35	0	0	0	0	0
		6:12	26.6	Non-Exposed	36	36	36	36	36	36	36	36	36	36	36	36	36	36	36	36	36	36	36	36	36	36	36	36	36	36	36	36	36	36	36	36	36	36	36	33	36	36	35	36	36	33
				Exposed	36	36	36	36	36	36	36	36	36	36	36	36	36	36	36	36	36	36	36	36	36	36	36	36	36	36	34	36	35	0	36	32	0	36	0	0	36	0	0	0	0	0
		7:12	30.3	Non-Exposed	37	37	37	37	37	37	37	37	37	37	37	37	37	37	37	37	37	37	37	37	37	37	37	37	37	37	37	37	37	37	37	37	37	37	37	37	37	37	36	36	36	36
				Exposed	37	37	37	37	37	37	37	37	37	37	37	37	37	37	37	37	37	37	37	37	37	37	37	37	37	37	37	37	37	35	37	37	32	36	34	0	34	32	0	34	32	0
		8:12	33.7	Non-Exposed	39	39	39	39	39	39	39	39	39	39	39	39	39	39	39	39	39	39	39	39	39	39	39	39	39	39	39	39	39	39	38	38	38	37	37	37	37	37	36	36	36	36
				Exposed	39	39	39	39	39	39	39	39	39	39	39	39	39	39	39	39	39	39	39	39	39	39	39	39	39	39	37	39	39	34	38	37	32	37	34	0	34	0	0	0	0	0
		9:12	36.9	Non-Exposed	40	40	40	40	40	40	40	40	40	40	40	40	40	40	40	40	40	40	40	40	40	40	40	40	40	40	40	40	40	40	39	39	39	39	39	38	38	38	36	36	36	36
				Exposed	40	40	40	40	40	40	40	40	40	40	40	40	40	40	40	40	40	40	40	40	40	40	40	40	40	40	37	40	39	34	39	37	32	37	34	0	34	0	0	0	0	0
		10:12	39.8	Non-Exposed	42	42	42	42	42	42	42	42	42	42	42	42	42	42	42	42	42	42	42	42	42	42	42	42	42	42	42	41	41	41	41	41	41	41	41	40	40	38	39	39	36	36
				Exposed	42	42	42	42	42	42	42	42	42	42	42	42	42	42	42	42	42	42	42	42	42	42	42	42	42	42	40	42	42	37	41	39	34	39	36	0	37	34	0	34	0	0
		11:12	42.5	Non-Exposed	45	45	45	45	45	45	45	45	45	45	45	45	45	45	45	45	45	45	45	45	45	45	45	45	45	45	45	44	44	44	43	43	43	42	42	41	41	38	40	40	36	36
				Exposed	45	45	45	45	45	45	45	45	45	45	45	45	45	45	45	45	45	45	45	45	45	45	45	44	45	45	40	44	42	37	43	39	34	39	36	0	37	34	0	34	0	0
		12:12	45	Non-Exposed	47	47	47	47	47	47	47	47	47	47	47	47	47	47	47	47	47	47	47	47	47	47	47	47	47	47	47	46	46	46	45	45	44	44	44	41	43	43	38	42	41	36
				Exposed	47	47	47	47	47	47	47	47	47	47	47	47	47	47	47	47	47	47	47	47	46	47	47	44	47	47	46	40	46	42	37	42	39	34	39	36	0	37	34	0	34	0	0
	D	Flat	0	Non-Exposed	40	40	40	40	40	40	40	40	40	40	40	40	40	40	40	40	40	40	40	40	40	40	40	40	40	40	40	40	40	37	40	40	35	40	39	32	40	36	0	40	34	0
				Exposed	40	40	40	40	40	40	40	40	40	40	40	40	40	40	40	40	40	38	40	40	36	40	40	39	40	40	35	40	39	0	40	36	0	39	33	0	37	0	0	34	0	0
		1:12	4.8	Non-Exposed	37	37	37	37	37	37	37	37	37	37	37	37	37	37	37	37	37	37	37	37	37	37	37	37	37	37	37	37	37	37	37	37	34	37	37	32	37	36	0	37	34	0
				Exposed	37	37	37	37	37	37	37	37	37	37	37	37	37	37	37	37	37	37	37	36	37	37	35	37	37	0	37	35	0	37	33	0	37	0	0	34	0	0	0	0	0	0
		2:12	9.5	Non-Exposed	35	35	35	35	35	35	35	35	35	35	35	35	35	35	35	35	35	35	35	35	35	35	35	35	35	35	35	35	35	32	35	33	0	35	0	0	35	0	0	35	0	0
				Exposed	35	35	35	35	35	35	35	35	35	35	35	35	35	35	35	35	35	35	35	35	34	35	35	32	35	33	0	35	0	0	35	0	0	33	0	0	0	0	0	0	0	0
		3:12	14.0	Non-Exposed	34	34	34	34	34	34	34	34	34	34	34	34	34	34	34	34	34	34	34	34	34	34	34	34	34	34	34	34	34	32	34	33	0	34	0	0	34	0	0	0	0	0
				Exposed	34	34	34	34	34	34	34	34	34	34	34	34	34	34	34	34	34	34	34	34	32	34	33	0	34	0	0	34	0	0	33	0	0	0	0	0	0	0	0	0	0	0
		4:12	18.4	Non-Exposed	34	34	34	34	34	34	34	34	34	34	34	34	34	34	34	34	34	34	34	34	34	34	34	34	34	34	34	34	34	32	34	33	0	34	0	0	34	0	0	0	0	0
				Exposed	34	34	34	34	34	34	34	34	34	34	34	34	34	34	34	34	34	34	34	34	32	34	33	0	34	0	0	34	0	0	0	0	0	0	0	0	0	0	0	0	0	0
		5:12	22.6	Non-Exposed	35	35	35	35	35	35	35	35	35	35	35	35	35	35	35	35	35	35	35	35	35	35	35	35	35	35	35	35	35	35	35	35	34	35	35	31	35	32	0	35	0	0
				Exposed	35	35	35	35	35	35	35	35	35	35	35	35	35	35	35	35	35	35	35	35	35	35	35	33	35	34	0	35	0	0	35	0	0	35	0	0	34	0	0	0	0	0
		6:12	26.6	Non-Exposed	36	36	36	36	36	36	36	36	36	36	36	36	36	36	36	36	36	36	36	36	36	36	36	36	36	36	36	36	36	36	36	36	34	36	35	0	36	32	0	36	0	0
				Exposed	36	36	36	36	36	36	36	36	36	36	36	36	36	36	36	36	36	36	36	36	36	36	36	36	36	36	34	36	34	0	36	32	0	36	0	0	34	0	0	0	0	0
		7:12	30.3	Non-Exposed	37	37	37	37	37	37	37	37	37	37	37	37	37	37	37	37	37	37	37	37	37	37	37	37	37	37	37	37	37	37	37	37	37	37	37	36	36	36	35	35	35	32
				Exposed	37	37	37	37	37	37	37	37	37	37	37	37	37	37	37	37	37	37	37	37	37	37	37	37	37	37	34	37	36	0	36	33	0	33	0	0	0	0	0	0	0	0
		8:12	33.7	Non-Exposed	39	39	39	39	39	39	39	39	39	39	39	39	39	39	39	39	39	39	39	39	39	39	39	39	39	39	38	38	38	38	38	38	37	37	37	36	36	34	36	36	32
				Exposed	39	39	39	39	39	39	39	39	39	39	39	39	39	39	39	39	39	39	39	39	39	39	39	37	38	38	34	38	36	0	36	33	0	33	0	0	0	0	0	0	0	0
		9:12	36.9	Non-Exposed	40	40	40	40	40	40	40	40	40	40	40	40	40	40	40	40	40	40	40	40	40	40	40	40	40	40	40	40	40	40	39	39	39	38	38	37	37	37	34	37	37	32
				Exposed	40	40	40	40	40	40	40	40	40	40	40	40	40	40	40	40	40	40	40	40	40	40	40	37	40	38	34	38	35	0	35	33	0	33	0	0	0	0	0	0	0	0
		10:12	39.8	Non-Exposed	42	42	42	42	42	42	42	42	42	42	42	42	42	42	42	42	42	42	42	42	42	42	42	42	41	41	41	40	40	40	40	40	37	39	39	34	38	37	32	37	34	0
				Exposed	42	42	42	42	42	42	42	42	42	42	42	42	42	42	42	42	42	42	42	42	40	42	42	37	41	38	34	38	35	0	35	33	0	33	0	0	0	0	0	0	0	0
		11:12	42.5	Non-Exposed	45	45	45	45	45	45	45	45	45	45	45	45	45	45	45	45	45	45	45	45	45	45	45	44	44	44	43	43	43	42	42	40	41	41	37	40	39	34	39	37	32
				Exposed	45	45	45	45	45	45	45	45	45	45	45	45	45	45	45	45	45	44	45	45	42	45	45	40	44	42	36	41	38	34	38	35	0	35	33	0	33	0	0	0	0	0
		12:12	45	Non-Exposed	47	47	47	47	47	47	47	47	47	47	47	47	47	47	47	47	47	47	47	47	47	47	47	47	47	47	46	46	46	45	45	45	44	44	43	43	43	40	42	42	37	41	39	34	40	37	32
				Exposed	47	47	47	47	47	47	47	47	47	47	47	47	47	47	46	47	47	44	47	47	42	46	45	40	45	42	36	41	38	33	38	35	0	35	33	0	33	0	0	0	0	0

Tamarack 2.3 Rail – Gable Flush-Mount on 30 Foot Maximum Mean Roof Height – Portrait – Panel Length = 96 Inches or Less

Ground Snow Load	Exposure Category	Roof Pitch	Roof Angle	Wind Speed (mph)	95			100			105			110			115			120			125			130			140			150			160			170			180			190		
				Roof Area	1	2	3	1	2	3	1	2	3	1	2	3	1	2	3	1	2	3	1	2	3	1	2	3	1	2	3	1	2	3	1	2	3	1	2	3	1	2	3	1	2	3
60	B	Flat	0	Non-Exposed	38	38	38	38	38	38	38	38	38	38	38	38	38	38	38	38	38	38	38	38	38	38	38	38	38	38	38	38	38	38	38	38	38	38	38	38	38	38	38	38	38	38
				Exposed	38	38	38	38	38	38	38	38	38	38	38	38	38	38	38	38	38	38	38	38	38	38	38	38	38	38	38	38	38	38	38	38	37	38	38	34	38	38	32	38	36	0
		1:12	4.8	Non-Exposed	36	36	36	36	36	36	36	36	36	36	36	36	36	36	36	36	36	36	36	36	36	36	36	36	36	36	36	36	36	36	36	36	36	36	36	36	36	36	36	36	36	36
				Exposed	36	36	36	36	36	36	36	36	36	36	36	36	36	36	36	36	36	36	36	36	36	36	36	36	36	36	36	36	36	36	36	36	36	36	36	34	36	36	0	36	36	0
		2:12	9.5	Non-Exposed	34	34	34	34	34	34	34	34	34	34	34	34	34	34	34	34	34	34	34	34	34	34	34	34	34	34	34	34	34	34	34	34	34	34	34	34	34	34	34	34	34	34
				Exposed	34	34	34	34	34	34	34	34	34	34	34	34	34	34	34	34	34	34	34	34	34	34	34	34	34	34	34	34	34	34	34	34	34	34	34	32	34	33	0	34	0	0
		3:12	14.0	Non-Exposed	32	32	32	32	32	32	32	32	32	32	32	32	32	32	32	32	32	32	32	32	32	32	32	32	32	32	32	32	32	32	32	32	32	32	32	32	32	32	32	32	32	32
				Exposed	32	32	32	32	32	32	32	32	32	32	32	32	32	32	32	32	32	32	32	32	32	32	32	32	32	32	32	32	32	32	32	32	32	32	32	32	32	32	0	32	0	0
		4:12	18.4	Non-Exposed	32	32	32	32	32	32	32	32	32	32	32	32	32	32	32	32	32	32	32	32	32	32	32	32	32	32	32	32	32	32	32	32	32	32	32	32	32	32	32	32	32	32
				Exposed	32	32	32	32	32	32	32	32	32	32	32	32	32	32	32	32	32	32	32	32	32	32	32	32	32	32	32	32	32	32	32	32	32	32	32	32	32	32	0	32	0	0
		5:12	22.6	Non-Exposed	33	33	33	33	33	33	33	33	33	33	33	33	33	33	33	33	33	33	33	33	33	33	33	33	33	33	33	33	33	33	33	33	33	33	33	33	33	33	33	33	33	33
				Exposed	33	33	33	33	33	33	33	33	33	33	33	33	33	33	33	33	33	33	33	33	33	33	33	33	33	33	33	33	33	33	33	33	33	33	33	33	33	33	0	33	0	0
		6:12	26.6	Non-Exposed	34	34	34	34	34	34	34	34	34	34	34	34	34	34	34	34	34	34	34	34	34	34	34	34	34	34	34	34	34	34	34	34	34	34	34	34	34	34	34	34	34	33
				Exposed	34	34	34	34	34	34	34	34	34	34	34	34	34	34	34	34	34	34	34	34	34	34	34	34	34	34	34	34	34	34	34	34	34	34	34	32	34	32	0	34	0	0
		7:12	30.3	Non-Exposed	35	35	35	35	35	35	35	35	35	35	35	35	35	35	35	35	35	35	35	35	35	35	35	35	35	35	35	35	35	35	35	35	35	35	35	35	35	35	35	35	35	35
				Exposed	35	35	35	35	35	35	35	35	35	35	35	35	35	35	35	35	35	35	35	35	35	35	35	35	35	35	35	35	35	35	35	35	35	35	35	35	35	34	0	35	34	0
		8:12	33.7	Non-Exposed	37	37	37	37	37	37	37	37	37	37	37	37	37	37	37	37	37	37	37	37	37	37	37	37	37	37	37	37	37	37	37	37	37	37	37	37	37	37	37	37	37	37
				Exposed	37	37	37	37	37	37	37	37	37	37	37	37	37	37	37	37	37	37	37	37	37	37	37	37	37	37	37	37	37	37	37	37	37	37	37	37	37	37	37	37	37	34
		9:12	36.9	Non-Exposed	39	39	39	39	39	39	39	39	39	39	39	39	39	39	39	39	39	39	39	39	39	39	39	39	39	39	39	39	39	39	39	39	39	39	39	39	39	39	39	39	39	39
				Exposed	39	39	39	39	39	39	39	39	39	39	39	39	39	39	39	39	39	39	39	39	39	39	39	39	39	39	39	39	39	39	39	39	39	39	39	34	39	39	37	39	39	34
		10:12	39.8	Non-Exposed	41	41	41	41	41	41	41	41	41	41	41	41	41	41	41	41	41	41	41	41	41	41	41	41	41	41	41	41	41	41	41	41	41	41	41	41	41	41	40	40	40	40
				Exposed	41	41	41	41	41	41	41	41	41	41	41	41	41	41	41	41	41	41	41	41	41	41	41	41	41	41	41	41	41	41	41	41	41	41	41	39	41	41	37	40	39	34
		11:12	42.5	Non-Exposed	43	43	43	43	43	43	43	43	43	43	43	43	43	43	43	43	43	43	43	43	43	43	43	43	43	43	43	43	43	43	43	43	43	43	43	43	42	42	42	42	42	42
				Exposed	43	43	43	43	43	43	43	43	43	43	43	43	43	43	43	43	43	43	43	43	43	43	43	43	43	43	43	43	43	43	43	43	42	43	43	39	42	42	37	42	39	34
		12:12	45	Non-Exposed	45	45	45	45	45	45	45	45	45	45	45	45	45	45	45	45	45	45	45	45	45	45	45	45	45	45	45	45	45	45	45	45	45	45	45	45	44	44	44	43	43	43
				Exposed	45	45	45	45	45	45	45	45	45	45	45	45	45	45	45	45	45	45	45	45	45	45	45	45	45	45	45	45	45	45	45	45	42	45	45	39	44	42	36	42	39	34
	C	Flat	0	Non-Exposed	38	38	38	38	38	38	38	38	38	38	38	38	38	38	38	38	38	38	38	38	38	38	38	38	38	38	38	38	38	38	38	38	38	38	36	38	38	33	38	38	0
				Exposed	38	38	38	38	38	38	38	38	38	38	38	38	38	38	38	38	38	38	38	38	38	38	38	38	38	38	35	38	38	32	38	36	0	38	34	0	38	0	0	35	0	0
		1:12	4.8	Non-Exposed	36	36	36	36	36	36	36	36	36	36	36	36	36	36	36	36	36	36	36	36	36	36	36	36	36	36	36	36	36	36	36	36	36	36	36	35	36	36	33	36	36	0
				Exposed	36	36	36	36	36	36	36	36	36	36	36	36	36	36	36	36	36	36	36	36	36	36	36	36	36	36	35	36	36	32	36	36	0	36	34	0	36	0	0	35	0	0
		2:12	9.5	Non-Exposed	34	34	34	34	34	34	34	34	34	34	34	34	34	34	34	34	34	34	34	34	34	34	34	34	34	34	34	34	34	34	34	34	34	34	34	33	34	34	0	34	32	0
				Exposed	34	34	34	34	34	34	34	34	34	34	34	34	34	34	34	34	34	34	34	34	34	34	34	34	34	34	33	34	34	0	34	0	0	34	0	0	34	0	0	0	0	0
		3:12	14.0	Non-Exposed	32	32	32	32	32	32	32	32	32	32	32	32	32	32	32	32	32	32	32	32	32	32	32	32	32	32	32	32	32	32	32	32	32	32	32	32	32	32	0	32	32	0
				Exposed	32	32	32	32	32	32	32	32	32	32	32	32	32	32	32	32	32	32	32	32	32	32	32	32	32	32	32	32	32	0	32	0	0	32	0	0	32	0	0	0	0	0
		4:12	18.4	Non-Exposed	32	32	32	32	32	32	32	32	32	32	32	32	32	32	32	32	32	32	32	32	32	32	32	32	32	32	32	32	32	32	32	32	32	32	32	32	32	32	0	32	32	0
				Exposed	32	32	32	32	32	32	32	32	32	32	32	32	32	32	32	32	32	32	32	32	32	32	32	32	32	32	32	32	32	0	32	0	0	32	0	0	32	0	0	0	0	0
		5:12	22.6	Non-Exposed	33	33	33	33	33	33	33	33	33	33	33	33	33	33	33	33	33	33	33	33	33	33	33	33	33	33	33	33	33	33	33	33	33	33	33	33	33	33	33	33	33	33
				Exposed	33	33	33	33	33	33	33	33	33	33	33	33	33	33	33	33	33	33	33	33	33	33	33	33	33	33	33	33	33	33	33	33	31	33	32	0	33	0	0	33	0	0
		6:12	26.6	Non-Exposed	34	34	34	34	34	34	34	34	34	34	34	34	34	34	34	34	34	34	34	34	34	34	34	34	34	34	34	34	34	34	34	34	34	34	34	34	34	34	34	34	34	33
				Exposed	34	34	34	34	34	34	34	34	34	34	34	34	34	34	34	34	34	34	34	34	34	34	34	34	34	34	34	34	34	34	34	34	0	34	32	0	34	0	0	34	0	0
		7:12	30.3	Non-Exposed	35	35	35	35	35	35	35	35	35	35	35	35	35	35	35	35	35	35	35	35	35	35	35	35	35	35	35	35	35	35	35	35	35	35	35	35	35	35	35	35	35	35
				Exposed	35	35	35	35	35	35	35	35	35	35	35	35	35	35	35	35	35	35	35	35	35	35	35	35	35	35	35	35	35	35	35	35	35	35	35	32	35	34	0	34	32	0
		8:12	33.7	Non-Exposed	37	37	37	37	37	37	37	37	37	37	37	37	37	37	37	37	37	37	37	37	37	37	37	37	37	37	37	37	37	37	37	37	36	36	36	36	36	36	36	36	36	36
				Exposed	37	37	37	37	37	37	37	37	37	37	37	37	37	37	37	37	37	37	37	37	37	37	37	37	37	37	37	37	37	37	37	34	37	37	32	36	34	0	34	0	0
		9:12	36.9	Non-Exposed	39	39	39	39	39	39	39	39	39	39	39	39	39	39	39	39	39	39	39	39	39	39	39	39	39	39	39	39	39	39	39	39	38	38	38	37	37	37	37	37	37	36
				Exposed	39	39	39	39	39	39	39	39	39	39	39	39	39	39	39	39	39	39	39	39	39	39	39	39	39	39	39	39	37	39	39	34	38	37	32	37	34	0	34	0	0
		10:12	39.8	Non-Exposed	41	41	41	41	41	41	41	41	41	41	41	41	41	41	41	41	41	41	41	41	41	41	41	41	41	41	41	41	41	40	40	40	40	40	40	39	39	38	38	38	38	36
				Exposed	41	41	41	41	41	41	41	41	41	41	41	41	41	41	41	41	41	41	41	41	41	41	41	41	41	41	40	41	41	37	40	39	34	39	36	0	37	34	0	34	0	0
		11:12	42.5	Non-Exposed	43	43	43	43	43	43	43	43	43	43	43	43	43	43	43	43	43	43	43	43	43	43	43	43	43	43	43	43	43	43	42	42	42	41	41	41	40	40	38	39	39	36
				Exposed	43	43	43	43	43	43	43	43	43	43	43	43	43	43	43	43	43	43	43	43	43	43	43	43	43	43	40	43	42	37	42	39	34	39	36	0	37	34	0	34	0	0
		12:12	45	Non-Exposed	45	45	45	45	45	45	45	45	45	45	45	45	45	45	45	45	45	45	45	45	45	45	45	45	45	45	45	44	44	44	44	44	44	43	43	41	42	42	38	41	41	36
				Exposed	45	45	45	45	45	45	45	45	45	45	45	45	45	45	45	45	45	45	45	45	45	44	45	46	40	44	42	37	42	39	34	39	36	0	37	34	0	34	0	0	0
	D	Flat	0	Non-Exposed	38	38	38	38	38	38	38	38	38	38	38	38	38	38	38	38	38	38	38	38	38	38	38	38	38	38	38	38	38	37	38	38	35	38	38	32	38	36	0	38	34	0
				Exposed	38	38	38	38	38	38	38	38	38	38	38	38	38	38	38	38	38	38	38	38	36	38	38	35	38	38	0	38	36	0	38	33	0	37	0	0	34	0	0	32	0	0
		1:12	4.8	Non-Exposed	36	36	36	36	36	36	36	36	36	36	36	36	36	36	36	36	36	36	36	36	36	36	36	36	36	36	36	36	36	36	36	36	34	36	36	32	36	36	0	36	34	0
				Exposed	36	36	36	36	36	36	36	36	36	36	36	36	36	36	36	36	36	36	36	36	36	36	36	35	36	36	0	36	35	0	36	33	0	36	0	0	34	0	0	0	0	0
		2:12	9.5	Non-Exposed	34	34	34	34	34	34	34	34	34	34	34	34	34	34	34	34	34	34	34	34	34	34	34	34	34	34	34	34	34	34	34	34	32	34	33	0	34	0	0	34	0	0
				Exposed	34	34	34	34	34	34	34	34	34	34	34	34	34	34	34	34	34	34	34	34	34	34	34	34	34	34	0	34	0	0	34	0	0	33	0	0	0	0	0	0	0	0
		3:12	14.0	Non-Exposed	32	32	32	32	32	32	32	32	32	32	32	32	32	32	32	32	32	32	32	32	32	32	32	32	32	32	32	32	32	32	32	32	32	32	32	0	32	0	0	32	0	0
				Exposed	32	32	32	32	32	32	32	32	32	32	32	32	32	32	32	32	32	32	32	32	32	32	32	32	0	32	0	0	32	0	0	32	0	0	0	0	0	0	0	0	0	0
		4:12	18.4	Non-Exposed	32	32	32	32	32	32	32	32	32	32	32	32	32	32	32	32	32	32	32	32	32	32	32	32	32	32	32	32	32	32	32	32	32	32	32	0	32	0	0	32	0	0
				Exposed	32	32	32	32	32	32	32	32	32	32	32	32	32	32	32	32	32	32	32	32	32	32	32	32	32	32	0	32	0	0	32	0	0	0	0	0	0	0	0	0	0	0
		5:12	22.6	Non-Exposed	33	33	33	33	33	33	33	33	33	33	33	33	33	33	33	33	33	33	33	33	33	33	33	33	33	33	33	33	33	33	33	33	33	33	33	33	33	33	31	33	32	0
				Exposed	33	33	33	33	33	33	33	33	33	33	33	33	33	33	33	33	33	33	33	33	33	33	33	33	33	33	0	33	0	0	33	0	0	33	0	0	33	0	0	33	0	0
		6:12	26.6	Non-Exposed	34	34	34	34	34	34	34	34	34	34	34	34	34	34	34	34	34	34	34	34	34	34	34	34	34	34	34	34	34	34	34	34	34	34	34	34	34	34	0	34	32	0
				Exposed	34	34	34	34	34	34	34	34	34	34	34	34	34	34	34	34	34	34	34	34	34	34	34	34	34	34	0	34	0	0	34	0	0	34	0	0	34	0	0	34	0	0
		7:12	30.3	Non-Exposed	35	35	35	35	35	35	35	35	35	35	35	35	35	35	35	35	35	35	35	35	35	35	35	35	35	35	35	35	35	35	35	35	35	35	35	34	34	34	34	34	34	32
				Exposed	35	35	35	35	35	35	35	35	35	35	35	35	35	35	35	35	35	35	35	35	35	35	35	35	35	35	35	35	35	34	35	35	0	35	33	0	33	0	0	0	0	0
		8:12	33.7	Non-Exposed	37	37	37	37	37	37	37	37	37	37	37	37	37	37	37	37	37	37	37	37	37	37	37	37	37	37	37	37	37	37	37	37	37	36	36	36	35	35	34	35	35	32
				Exposed	37	37	37	37	37	37	37	37	37	37	37	37	37	37	37	37	37	37	37	37	37	37	37	37	37	37	37	37	34	37	36	0	36	33	0	33	0	0	0	0	0	0
		9:12	36.9	Non-Exposed	39	39	39	39	39	39	39	39	39	39	39	39	39	39	39	39	39	39	39	39	39	39	39	39	39	39	39	39	39	38	38	38	37	37	37	36	36	34	36	36	36	32
				Exposed	39	39	39	39	39	39	39	39	39	39	39	39	39	39	39	39	39	39	39	39	39	39	39	39	37	39	38	34	38	35	0	35	33	0	33	0	0	0	0	0	0	0
		10:12	39.8	Non-Exposed	41	41	41	41	41	41	41	41	41	41	41	41	41	41	41	41	41	41	41	41	41	41	41	41	41	41	40	40	40	39	39	39	38	38	38	37	38	38	34	37	37	32
				Exposed	41	41	41	41	41	41	41	41	41	41	41	41	41	41	41	41	41	41	41	41	41	41	41	41	40	41	41	37	40	38	34	38	35	0	35	33	0	33	0	0	0	0
		11:12	42.5	Non-Exposed	43	43	43	43	43	43	43	43	43	43	43	43	43	43	43	43	43	43	43	43	43	43	43	43	43	43	43	42	42	42	42	42	41	41	40	40	40	37	39	39	34	38	37	32
				Exposed	43	43	43	43	43	43	43	43	43	43	43	43	43	43	43	43	43	43	43	43	42	43	43	40	42	42	36	41	38	34	38	35	0	35	33	0	33	0	0	0	0	0
		12:12	45	Non-Exposed	45	45	45	45	45	45	45	45	45	45	45	45	45	45	45	45	45	45	45	45	45	45	45	45	44	44	44	43	43	43	42	42	40	41	41	37	40	39	34	39	37	32
				Exposed	45	45	45	45	45	45	45	45	45	45	45	45	45	45	45	45	45	44	45	45	42	45	45	40	44	42	36	41	38	33	38	35	0	35	33	0	33	0	0	0	0	0

Tamarack 2.3 Rail – Gable Flush-Mount on 30 Foot Maximum Mean Roof Height – Portrait – Panel Length = 96 Inches or Less

Ground Snow Load	Exposure Category	Roof Pitch	Roof Angle	Wind Speed (mph)	95			100			105			110			115			120			125			130			140			150			160			170			180			190		
				Roof Area	1	2	3	1	2	3	1	2	3	1	2	3	1	2	3	1	2	3	1	2	3	1	2	3	1	2	3	1	2	3	1	2	3	1	2	3	1	2	3	1	2	3
70	B	Flat	0	Non-Exposed	36	36	36	36	36	36	36	36	36	36	36	36	36	36	36	36	36	36	36	36	36	36	36	36	36	36	36	36	36	36	36	36	36	36	36	36	36	36	36	36	36	36
				Exposed	36	36	36	36	36	36	36	36	36	36	36	36	36	36	36	36	36	36	36	36	36	36	36	36	36	36	36	36	36	36	36	36	36	36	36	34	36	36	32	36	36	0
		1:12	4.8	Non-Exposed	33	33	33	33	33	33	33	33	33	33	33	33	33	33	33	33	33	33	33	33	33	33	33	33	33	33	33	33	33	33	33	33	33	33	33	33	33	33	33	33	33	33
				Exposed	33	33	33	33	33	33	33	33	33	33	33	33	33	33	33	33	33	33	33	33	33	33	33	33	33	33	33	33	33	33	33	33	33	33	33	33	33	33	0	33	33	0
		2:12	9.5	Non-Exposed	31	31	31	31	31	31	31	31	31	31	31	31	31	31	31	31	31	31	31	31	31	31	31	31	31	31	31	31	31	31	31	31	31	31	31	31	31	31	31	31	31	31
				Exposed	31	31	31	31	31	31	31	31	31	31	31	31	31	31	31	31	31	31	31	31	31	31	31	31	31	31	31	31	31	31	31	31	31	31	31	31	31	31	0	31	0	0
		3:12	14.0	Non-Exposed	30	30	30	30	30	30	30	30	30	30	30	30	30	30	30	30	30	30	30	30	30	30	30	30	30	30	30	30	30	30	30	30	30	30	30	30	30	30	30	30	30	30
				Exposed	30	30	30	30	30	30	30	30	30	30	30	30	30	30	30	30	30	30	30	30	30	30	30	30	30	30	30	30	30	30	30	30	30	30	30	30	30	30	0	30	0	0
		4:12	18.4	Non-Exposed	30	30	30	30	30	30	30	30	30	30	30	30	30	30	30	30	30	30	30	30	30	30	30	30	30	30	30	30	30	30	30	30	30	30	30	30	30	30	30	30	30	30
				Exposed	30	30	30	30	30	30	30	30	30	30	30	30	30	30	30	30	30	30	30	30	30	30	30	30	30	30	30	30	30	30	30	30	30	30	30	30	30	30	0	30	0	0
		5:12	22.6	Non-Exposed	31	31	31	31	31	31	31	31	31	31	31	31	31	31	31	31	31	31	31	31	31	31	31	31	31	31	31	31	31	31	31	31	31	31	31	31	31	31	31	31	31	31
				Exposed	31	31	31	31	31	31	31	31	31	31	31	31	31	31	31	31	31	31	31	31	31	31	31	31	31	31	31	31	31	31	31	31	31	31	31	31	31	31	0	31	0	0
		6:12	26.6	Non-Exposed	32	32	32	32	32	32	32	32	32	32	32	32	32	32	32	32	32	32	32	32	32	32	32	32	32	32	32	32	32	32	32	32	32	32	32	32	32	32	32	32	32	32
				Exposed	32	32	32	32	32	32	32	32	32	32	32	32	32	32	32	32	32	32	32	32	32	32	32	32	32	32	32	32	32	32	32	32	32	32	32	0	32	0	0	32	0	0
		7:12	30.3	Non-Exposed	33	33	33	33	33	33	33	33	33	33	33	33	33	33	33	33	33	33	33	33	33	33	33	33	33	33	33	33	33	33	33	33	33	33	33	33	33	33	33	33	33	33
				Exposed	33	33	33	33	33	33	33	33	33	33	33	33	33	33	33	33	33	33	33	33	33	33	33	33	33	33	33	33	33	33	33	33	33	33	33	32	33	33	0	33	32	0
		8:12	33.7	Non-Exposed	34	34	34	34	34	34	34	34	34	34	34	34	34	34	34	34	34	34	34	34	34	34	34	34	34	34	34	34	34	34	34	34	34	34	34	34	34	34	34	34	34	34
				Exposed	34	34	34	34	34	34	34	34	34	34	34	34	34	34	34	34	34	34	34	34	34	34	34	34	34	34	34	34	34	34	34	34	34	34	34	34	34	34	0	34	0	0
		9:12	36.9	Non-Exposed	36	36	36	36	36	36	36	36	36	36	36	36	36	36	36	36	36	36	36	36	36	36	36	36	36	36	36	36	36	36	36	36	36	36	36	36	36	36	35	35	35	35
				Exposed	36	36	36	36	36	36	36	36	36	36	36	36	36	36	36	36	36	36	36	36	36	36	36	36	36	36	36	36	36	36	36	36	34	36	36	32	36	34	0	34	0	0
		10:12	39.8	Non-Exposed	38	38	38	38	38	38	38	38	38	38	38	38	38	38	38	38	38	38	38	38	38	38	38	38	38	38	38	38	38	38	38	38	38	38	38	38	37	37	37	36	36	36
				Exposed	38	38	38	38	38	38	38	38	38	38	38	38	38	38	38	38	38	38	38	38	38	38	38	38	38	38	38	38	38	37	38	38	34	38	36	0	37	34	0	34	0	0
		11:12	42.5	Non-Exposed	40	40	40	40	40	40	40	40	40	40	40	40	40	40	40	40	40	40	40	40	40	40	40	40	40	40	40	40	40	40	40	40	39	39	39	38	38	38	38	38	38	36
				Exposed	40	40	40	40	40	40	40	40	40	40	40	40	40	40	40	40	40	40	40	40	40	40	40	40	40	40	40	40	40	37	40	39	34	39	36	0	37	34	0	34	0	0
		12:12	45	Non-Exposed	42	42	42	42	42	42	42	42	42	42	42	42	42	42	42	42	42	42	42	42	42	42	42	42	42	42	42	42	42	42	41	41	41	41	41	41	40	40	38	39	39	36
				Exposed	42	42	42	42	42	42	42	42	42	42	42	42	42	42	42	42	42	42	42	42	42	42	42	42	42	42	42	42	42	37	41	39	34	39	36	0	37	34	0	34	0	0
	C	Flat	0	Non-Exposed	36	36	36	36	36	36	36	36	36	36	36	36	36	36	36	36	36	36	36	36	36	36	36	36	36	36	36	36	36	36	36	36	36	36	36	36	36	36	33	36	36	0
				Exposed	36	36	36	36	36	36	36	36	36	36	36	36	36	36	36	36	36	36	36	36	36	36	36	36	36	36	35	36	36	32	36	36	0	36	34	0	36	0	0	35	0	0
		1:12	4.8	Non-Exposed	33	33	33	33	33	33	33	33	33	33	33	33	33	33	33	33	33	33	33	33	33	33	33	33	33	33	33	33	33	33	33	33	33	33	33	33	33	33	33	33	33	0
				Exposed	33	33	33	33	33	33	33	33	33	33	33	33	33	33	33	33	33	33	33	33	33	33	33	33	33	33	33	33	33	32	33	33	0	33	33	0	33	0	0	33	0	0
		2:12	9.5	Non-Exposed	31	31	31	31	31	31	31	31	31	31	31	31	31	31	31	31	31	31	31	31	31	31	31	31	31	31	31	31	31	31	31	31	31	31	31	31	31	31	0	31	31	0
				Exposed	31	31	31	31	31	31	31	31	31	31	31	31	31	31	31	31	31	31	31	31	31	31	31	31	31	31	31	31	31	0	31	0	0	31	0	0	31	0	0	0	0	0
		3:12	14.0	Non-Exposed	30	30	30	30	30	30	30	30	30	30	30	30	30	30	30	30	30	30	30	30	30	30	30	30	30	30	30	30	30	30	30	30	30	30	30	30	30	30	0	30	30	0
				Exposed	30	30	30	30	30	30	30	30	30	30	30	30	30	30	30	30	30	30	30	30	30	30	30	30	30	30	30	30	30	0	30	0	0	30	0	0	30	0	0	0	0	0
		4:12	18.4	Non-Exposed	30	30	30	30	30	30	30	30	30	30	30	30	30	30	30	30	30	30	30	30	30	30	30	30	30	30	30	30	30	30	30	30	30	30	30	30	30	30	0	30	30	0
				Exposed	30	30	30	30	30	30	30	30	30	30	30	30	30	30	30	30	30	30	30	30	30	30	30	30	30	30	30	30	30	0	30	0	0	30	0	0	30	0	0	0	0	0
		5:12	22.6	Non-Exposed	31	31	31	31	31	31	31	31	31	31	31	31	31	31	31	31	31	31	31	31	31	31	31	31	31	31	31	31	31	31	31	31	31	31	31	31	31	31	31	31	31	31
				Exposed	31	31	31	31	31	31	31	31	31	31	31	31	31	31	31	31	31	31	31	31	31	31	31	31	31	31	31	31	31	31	31	31	31	31	31	0	31	0	0	31	0	0
		6:12	26.6	Non-Exposed	32	32	32	32	32	32	32	32	32	32	32	32	32	32	32	32	32	32	32	32	32	32	32	32	32	32	32	32	32	32	32	32	32	32	32	32	32	32	32	32	32	32
				Exposed	32	32	32	32	32	32	32	32	32	32	32	32	32	32	32	32	32	32	32	32	32	32	32	32	32	32	32	32	32	32	32	32	0	32	32	0	32	0	0	32	0	0
		7:12	30.3	Non-Exposed	33	33	33	33	33	33	33	33	33	33	33	33	33	33	33	33	33	33	33	33	33	33	33	33	33	33	33	33	33	33	33	33	33	33	33	33	33	33	33	33	33	33
				Exposed	33	33	33	33	33	33	33	33	33	33	33	33	33	33	33	33	33	33	33	33	33	33	33	33	33	33	33	33	33	33	33	33	0	33	32	0	33	32	0	33	32	0
		8:12	33.7	Non-Exposed	34	34	34	34	34	34	34	34	34	34	34	34	34	34	34	34	34	34	34	34	34	34	34	34	34	34	34	34	34	34	34	34	34	34	34	34	34	34	34	34	34	34
				Exposed	34	34	34	34	34	34	34	34	34	34	34	34	34	34	34	34	34	34	34	34	34	34	34	34	34	34	34	34	34	34	34	34	0	34	32	0	34	0	0	34	0	0
		9:12	36.9	Non-Exposed	36	36	36	36	36	36	36	36	36	36	36	36	36	36	36	36	36	36	36	36	36	36	36	36	36	36	36	36	36	36	36	36	36	36	36	36	36	35	35	35	35	35
				Exposed	36	36	36	36	36	36	36	36	36	36	36	36	36	36	36	36	36	36	36	36	36	36	36	36	36	36	36	36	36	34	36	36	32	36	34	0	34	0	0	34	0	0
		10:12	39.8	Non-Exposed	38	38	38	38	38	38	38	38	38	38	38	38	38	38	38	38	38	38	38	38	38	38	38	38	38	38	38	38	38	38	38	38	38	38	38	38	37	37	36	36	36	36
				Exposed	38	38	38	38	38	38	38	38	38	38	38	38	38	38	38	38	38	38	38	38	38	38	38	38	38	38	38	38	38	37	38	38	34	38	36	0	37	34	0	34	0	0
		11:12	42.5	Non-Exposed	40	40	40	40	40	40	40	40	40	40	40	40	40	40	40	40	40	40	40	40	40	40	40	40	40	40	40	40	40	40	40	40	39	39	39	38	38	38	38	38	38	36
				Exposed	40	40	40	40	40	40	40	40	40	40	40	40	40	40	40	40	40	40	40	40	40	40	40	40	40	40	40	40	40	37	40	39	34	39	36	0	37	34	0	34	0	0
		12:12	45	Non-Exposed	42	42	42	42	42	42	42	42	42	42	42	42	42	42	42	42	42	42	42	42	42	42	42	42	42	42	42	42	42	42	41	41	41	41	41	41	40	40	38	39	39	36
				Exposed	42	42	42	42	42	42	42	42	42	42	42	42	42	42	42	42	42	42	42	42	42	42	42	42	42	42	46	40	42	42	37	41	39	34	39	36	0	37	34	0	34	0	0
	D	Flat	0	Non-Exposed	36	36	36	36	36	36	36	36	36	36	36	36	36	36	36	36	36	36	36	36	36	36	36	36	36	36	36	36	36	36	36	36	35	36	36	32	36	36	0	36	34	0
				Exposed	36	36	36	36	36	36	36	36	36	36	36	36	36	36	36	36	36	36	36	36	36	36	36	36	35	36	36	0	36	36	0	36	33	0	36	0	0	34	0	0	32	0	0
		1:12	4.8	Non-Exposed	33	33	33	33	33	33	33	33	33	33	33	33	33	33	33	33	33	33	33	33	33	33	33	33	33	33	33	33	33	33	33	33	33	33	33	32	33	33	0	33	33	0
				Exposed	33	33	33	33	33	33	33	33	33	33	33	33	33	33	33	33	33	33	33	33	33	33	33	33	33	33	0	33	33	0	33	33	0	33	0	0	33	0	0	0	0	0
		2:12	9.5	Non-Exposed	31	31	31	31	31	31	31	31	31	31	31	31	31	31	31	31	31	31	31	31	31	31	31	31	31	31	31	31	31	31	31	31	31	31	31	0	31	0	0	31	0	0
				Exposed	31	31	31	31	31	31	31	31	31	31	31	31	31	31	31	31	31	31	31	31	31	31	31	31	31	31	0	31	0	0	31	0	0	31	0	0	0	0	0	0	0	0
		3:12	14.0	Non-Exposed	30	30	30	30	30	30	30	30	30	30	30	30	30	30	30	30	30	30	30	30	30	30	30	30	30	30	30	30	30	30	30	30	30	30	30	0	30	0	0	30	0	0
				Exposed	30	30	30	30	30	30	30	30	30	30	30	30	30	30	30	30	30	30	30	30	30	30	30	30	30	30	0	30	0	0	30	0	0	30	0	0	0	0	0	0	0	0
		4:12	18.4	Non-Exposed	30	30	30	30	30	30	30	30	30	30	30	30	30	30	30	30	30	30	30	30	30	30	30	30	30	30	30	30	30	30	30	30	30	30	30	0	30	0	0	30	0	0
				Exposed	30	30	30	30	30	30	30	30	30	30	30	30	30	30	30	30	30	30	30	30	30	30	30	30	30	30	0	30	0	0	30	0	0	30	0	0	0	0	0	0	0	0
		5:12	22.6	Non-Exposed	31	31	31	31	31	31	31	31	31	31	31	31	31	31	31	31	31	31	31	31	31	31	31	31	31	31	31	31	31	31	31	31	31	31	31	31	31	31	0	31	31	0
				Exposed	31	31	31	31	31	31	31	31	31	31	31	31	31	31	31	31	31	31	31	31	31	31	31	31	31	31	31	31	31	0	31	0	0	31	0	0	31	0	0	31	0	0
		6:12	26.6	Non-Exposed	32	32	32	32	32	32	32	32	32	32	32	32	32	32	32	32	32	32	32	32	32	32	32	32	32	32	32	32	32	32	32	32	32	32	32	32	32	32	0	32	32	0
				Exposed	32	32	32	32	32	32	32	32	32	32	32	32	32	32	32	32	32	32	32	32	32	32	32	32	32	32	32	32	32	0	32	0	0	32	0	0	32	0	0	32	0	0
		7:12	30.3	Non-Exposed	33	33	33	33	33	33	33	33	33	33	33	33	33	33	33	33	33	33	33	33	33	33	33	33	33	33	33	33	33	33	33	33	33	33	33	33	33	33	33	33	33	33
				Exposed	33	33	33	33	33	33	33	33	33	33	33	33	33	33	33	33	33	33	33	33	33	33	33	33	33	33	33	33	33	33	33	33	0	33	33	0	32	0	0	0	0	0
		8:12	33.7	Non-Exposed	34	34	34	34	34	34	34	34	34	34	34	34	34	34	34	34	34	34	34	34	34	34	34	34	34	34	34	34	34	34	34	34	34	34	34	33	33	33	33	33	33	32
				Exposed	34	34	34	34	34	34	34	34	34	34	34	34	34	34	34	34	34	34	34	34	34	34	34	34	34	34	34	34	34	34	34	34	0	34	33	0	33	0	0	0	0	0
		9:12	36.9	Non-Exposed	36	36	36	36	36	36	36	36	36	36	36	36	36	36	36	36	36	36	36	36	36	36	36	36	36	36	36	36	36	36	36	36	36	35	35	35	35	35	34	34	34	32
				Exposed	36	36	36	36	36	36	36	36	36	36	36	36	36	36	36	36	36	36	36	36	36	36	36	36	36	36	36	36	34	36	35	0	35	33	0	33	0	0	0	0	0	0
		10:12	39.8	Non-Exposed	38	38	38	38	38	38	38	38	38	38	38	38	38	38	38	38	38	38	38	38	38	38	38	38	38	38	38	38	38	37	37	37	37	37	37	36	36	34	35	35	35	32
				Exposed	38	38	38	38	38	38	38	38	38	38	38	38	38	38	38	38	38	38	38	38	38	38	38	38	38	38	37	38	38	34	37	35	0	35	33	0	33	0	0	0	0	0
		11:12	42.5	Non-Exposed	40	40	40	40	40	40	40	40	40	40	40	40	40	40	40	40	40	40	40	40	40	40	40	40	40	40	40	40	40	39	39	39	38	38	37	37	37	34	36	36	32
				Exposed	40	40	40	40	40	40	40	40	40	40	40	40	40	40	40	40	40	40	40	40	40	40	40	40	40	40	36	40	38	34	38	35	0	35	33	0	33	0	0	0	0	0
		12:12	45	Non-Exposed	42	42	42	42	42	42	42	42	42	42	42	42	42	42	42	42	42	42	42	42	42	42	42	42	42	42	42	41	41	41	40	40	40	39	39	37	39	39	34	38	37	32
				Exposed	42	42	42	42	42	42	42	42	42	42	42	42	42	42	42	42	42	42	42	42	42	42	42	40	42	42	36	41	38	33	38	35	0	35	33	0	33	0	0	0	0	0

Tamarack 2.3 Rail – Gable Flush-Mount on 30 Foot Maximum Mean Roof Height – Portrait – Panel Length = 96 Inches or Less

Ground Snow Load	Exposure Category	Roof Pitch	Roof Angle	Wind Speed (mph)	95			100			105			110			115			120			125			130			140			150			160			170			180			190		
				Roof Area	1	2	3	1	2	3	1	2	3	1	2	3	1	2	3	1	2	3	1	2	3	1	2	3	1	2	3	1	2	3	1	2	3	1	2	3	1	2	3	1	2	3
80	B	Flat	0	Non-Exposed	33	33	33	33	33	33	33	33	33	33	33	33	33	33	33	33	33	33	33	33	33	33	33	33	33	33	33	33	33	33	33	33	33	33	33	33	33	33	33	33	33	33
				Exposed	33	33	33	33	33	33	33	33	33	33	33	33	33	33	33	33	33	33	33	33	33	33	33	33	33	33	33	33	33	33	33	33	33	33	33	33	33	33	32	33	33	0
		1:12	4.8	Non-Exposed	31	31	31	31	31	31	31	31	31	31	31	31	31	31	31	31	31	31	31	31	31	31	31	31	31	31	31	31	31	31	31	31	31	31	31	31	31	31	31	31	31	31
				Exposed	31	31	31	31	31	31	31	31	31	31	31	31	31	31	31	31	31	31	31	31	31	31	31	31	31	31	31	31	31	31	31	31	31	31	31	31	31	31	0	31	31	0
		2:12	9.5	Non-Exposed	29	29	29	29	29	29	29	29	29	29	29	29	29	29	29	29	29	29	29	29	29	29	29	29	29	29	29	29	29	29	29	29	29	29	29	29	29	29	29	29	29	29
				Exposed	29	29	29	29	29	29	29	29	29	29	29	29	29	29	29	29	29	29	29	29	29	29	29	29	29	29	29	29	29	29	29	29	29	29	29	29	29	29	0	29	0	0
		3:12	14.0	Non-Exposed	28	28	28	28	28	28	28	28	28	28	28	28	28	28	28	28	28	28	28	28	28	28	28	28	28	28	28	28	28	28	28	28	28	28	28	28	28	28	28	28	28	28
				Exposed	28	28	28	28	28	28	28	28	28	28	28	28	28	28	28	28	28	28	28	28	28	28	28	28	28	28	28	28	28	28	28	28	28	28	28	28	28	28	0	28	0	0
		4:12	18.4	Non-Exposed	28	28	28	28	28	28	28	28	28	28	28	28	28	28	28	28	28	28	28	28	28	28	28	28	28	28	28	28	28	28	28	28	28	28	28	28	28	28	28	28	28	28
				Exposed	28	28	28	28	28	28	28	28	28	28	28	28	28	28	28	28	28	28	28	28	28	28	28	28	28	28	28	28	28	28	28	28	28	28	28	28	28	28	0	28	0	0
		5:12	22.6	Non-Exposed	29	29	29	29	29	29	29	29	29	29	29	29	29	29	29	29	29	29	29	29	29	29	29	29	29	29	29	29	29	29	29	29	29	29	29	29	29	29	29	29	29	29
				Exposed	29	29	29	29	29	29	29	29	29	29	29	29	29	29	29	29	29	29	29	29	29	29	29	29	29	29	29	29	29	29	29	29	29	29	29	29	29	29	29	29	29	0
		6:12	26.6	Non-Exposed	30	30	30	30	30	30	30	30	30	30	30	30	30	30	30	30	30	30	30	30	30	30	30	30	30	30	30	30	30	30	30	30	30	30	30	30	30	30	30	30	30	30
				Exposed	30	30	30	30	30	30	30	30	30	30	30	30	30	30	30	30	30	30	30	30	30	30	30	30	30	30	30	30	30	30	30	30	30	30	30	30	30	30	0	30	0	0
		7:12	30.3	Non-Exposed	31	31	31	31	31	31	31	31	31	31	31	31	31	31	31	31	31	31	31	31	31	31	31	31	31	31	31	31	31	31	31	31	31	31	31	31	31	31	31	31	31	31
				Exposed	31	31	31	31	31	31	31	31	31	31	31	31	31	31	31	31	31	31	31	31	31	31	31	31	31	31	31	31	31	31	31	31	31	31	31	31	31	31	0	31	31	0
		8:12	33.7	Non-Exposed	32	32	32	32	32	32	32	32	32	32	32	32	32	32	32	32	32	32	32	32	32	32	32	32	32	32	32	32	32	32	32	32	32	32	32	32	32	32	32	32	32	32
				Exposed	32	32	32	32	32	32	32	32	32	32	32	32	32	32	32	32	32	32	32	32	32	32	32	32	32	32	32	32	32	32	32	32	32	32	32	32	32	32	0	32	0	0
		9:12	36.9	Non-Exposed	34	34	34	34	34	34	34	34	34	34	34	34	34	34	34	34	34	34	34	34	34	34	34	34	34	34	34	34	34	34	34	34	34	34	34	34	34	34	34	33	33	33
				Exposed	34	34	34	34	34	34	34	34	34	34	34	34	34	34	34	34	34	34	34	34	34	34	34	34	34	34	34	34	34	34	34	34	34	34	34	32	34	34	0	33	0	0
		10:12	39.8	Non-Exposed	36	36	36	36	36	36	36	36	36	36	36	36	36	36	36	36	36	36	36	36	36	36	36	36	36	36	36	36	36	36	36	36	36	36	36	36	35	35	35	35	35	35
				Exposed	36	36	36	36	36	36	36	36	36	36	36	36	36	36	36	36	36	36	36	36	36	36	36	36	36	36	36	36	36	34	36	36	0	35	34	0	34	0	0	35	0	0
		11:12	42.5	Non-Exposed	38	38	38	38	38	38	38	38	38	38	38	38	38	38	38	38	38	38	38	38	38	38	38	38	38	38	38	38	38	38	38	38	37	37	37	37	37	37	36	36	36	36
				Exposed	38	38	38	38	38	38	38	38	38	38	38	38	38	38	38	38	38	38	38	38	38	38	38	38	38	38	38	38	38	34	37	36	0	37	34	0	34	0	0	37	0	0
		12:12	45	Non-Exposed	40	40	40	40	40	40	40	40	40	40	40	40	40	40	40	40	40	40	40	40	40	40	40	40	40	40	40	40	40	40	40	40	39	39	39	38	38	38	37	37	36	36
				Exposed	40	40	40	40	40	40	40	40	40	40	40	40	40	40	40	40	40	40	40	40	40	40	40	40	40	40	40	40	40	39	34	39	36	0	37	34	0	34	0	0	0	0
	C	Flat	0	Non-Exposed	33	33	33	33	33	33	33	33	33	33	33	33	33	33	33	33	33	33	33	33	33	33	33	33	33	33	33	33	33	33	33	33	33	33	33	33	33	33	33	33	33	0
				Exposed	33	33	33	33	33	33	33	33	33	33	33	33	33	33	33	33	33	33	33	33	33	33	33	33	33	33	33	33	33	32	33	33	0	33	33	0	0	33	0	0	0	0
		1:12	4.8	Non-Exposed	31	31	31	31	31	31	31	31	31	31	31	31	31	31	31	31	31	31	31	31	31	31	31	31	31	31	31	31	31	31	31	31	31	31	31	31	31	31	31	31	31	0
				Exposed	31	31	31	31	31	31	31	31	31	31	31	31	31	31	31	31	31	31	31	31	31	31	31	31	31	31	31	31	31	0	31	31	0	31	0	0	31	0	0	0	0	0
		2:12	9.5	Non-Exposed	29	29	29	29	29	29	29	29	29	29	29	29	29	29	29	29	29	29	29	29	29	29	29	29	29	29	29	29	29	29	29	29	29	29	29	29	29	29	0	29	0	0
				Exposed	29	29	29	29	29	29	29	29	29	29	29	29	29	29	29	29	29	29	29	29	29	29	29	29	29	29	29	29	0	29	0	0	29	0	0	29	0	0	0	0	0	0
		3:12	14.0	Non-Exposed	28	28	28	28	28	28	28	28	28	28	28	28	28	28	28	28	28	28	28	28	28	28	28	28	28	28	28	28	28	28	28	28	28	28	28	28	28	28	0	28	28	0
				Exposed	28	28	28	28	28	28	28	28	28	28	28	28	28	28	28	28	28	28	28	28	28	28	28	28	28	28	28	28	0	28	0	0	28	0	0	28	0	0	0	0	0	0
		4:12	18.4	Non-Exposed	28	28	28	28	28	28	28	28	28	28	28	28	28	28	28	28	28	28	28	28	28	28	28	28	28	28	28	28	28	28	28	28	28	28	28	28	28	28	0	28	28	0
				Exposed	28	28	28	28	28	28	28	28	28	28	28	28	28	28	28	28	28	28	28	28	28	28	28	28	28	28	28	28	0	28	0	0	28	0	0	28	0	0	0	0	0	0
		5:12	22.6	Non-Exposed	29	29	29	29	29	29	29	29	29	29	29	29	29	29	29	29	29	29	29	29	29	29	29	29	29	29	29	29	29	29	29	29	29	29	29	29	29	29	29	29	29	29
				Exposed	29	29	29	29	29	29	29	29	29	29	29	29	29	29	29	29	29	29	29	29	29	29	29	29	29	29	29	29	29	29	29	29	29	29	29	29	29	29	0	29	0	0
		6:12	26.6	Non-Exposed	30	30	30	30	30	30	30	30	30	30	30	30	30	30	30	30	30	30	30	30	30	30	30	30	30	30	30	30	30	30	30	30	30	30	30	30	30	30	30	30	30	30
				Exposed	30	30	30	30	30	30	30	30	30	30	30	30	30	30	30	30	30	30	30	30	30	30	30	30	30	30	30	30	30	30	0	30	30	0	30	0	0	30	0	0	0	0
		7:12	30.3	Non-Exposed	31	31	31	31	31	31	31	31	31	31	31	31	31	31	31	31	31	31	31	31	31	31	31	31	31	31	31	31	31	31	31	31	31	31	31	31	31	31	31	31	31	31
				Exposed	31	31	31	31	31	31	31	31	31	31	31	31	31	31	31	31	31	31	31	31	31	31	31	31	31	31	31	31	31	31	31	31	31	31	31	31	31	31	0	31	31	0
		8:12	33.7	Non-Exposed	32	32	32	32	32	32	32	32	32	32	32	32	32	32	32	32	32	32	32	32	32	32	32	32	32	32	32	32	32	32	32	32	32	32	32	32	32	32	32	32	32	32
				Exposed	32	32	32	32	32	32	32	32	32	32	32	32	32	32	32	32	32	32	32	32	32	32	32	32	32	32	32	32	32	32	32	32	32	32	32	32	32	32	0	32	0	0
		9:12	36.9	Non-Exposed	34	34	34	34	34	34	34	34	34	34	34	34	34	34	34	34	34	34	34	34	34	34	34	34	34	34	34	34	34	34	34	34	34	34	34	34	34	34	34	33	33	33
				Exposed	34	34	34	34	34	34	34	34	34	34	34	34	34	34	34	34	34	34	34	34	34	34	34	34	34	34	34	34	34	34	34	34	34	34	32	34	34	0	33	0	0	0
		10:12	39.8	Non-Exposed	36	36	36	36	36	36	36	36	36	36	36	36	36	36	36	36	36	36	36	36	36	36	36	36	36	36	36	36	36	36	36	36	36	36	36	35	35	35	35	35	35	35
				Exposed	36	36	36	36	36	36	36	36	36	36	36	36	36	36	36	36	36	36	36	36	36	36	36	36	36	36	36	36	36	34	36	36	0	35	34	0	34	0	0	35	0	0
		11:12	42.5	Non-Exposed	38	38	38	38	38	38	38	38	38	38	38	38	38	38	38	38	38	38	38	38	38	38	38	38	38	38	38	38	38	38	38	38	37	37	37	37	37	37	36	36	36	36
				Exposed	38	38	38	38	38	38	38	38	38	38	38	38	38	38	38	38	38	38	38	38	38	38	38	38	38	38	38	38	37	34	37	36	0	37	34	0	34	0	0	37	0	0
		12:12	45	Non-Exposed	40	40	40	40	40	40	40	40	40	40	40	40	40	40	40	40	40	40	40	40	40	40	40	40	40	40	40	40	40	40	40	40	39	39	39	38	38	38	37	37	36	36
				Exposed	40	40	40	40	40	40	40	40	40	40	40	40	40	40	40	40	40	40	40	40	40	40	40	40	40	40	40	40	39	34	39	36	0	37	34	0	34	0	0	0	0	0
	D	Flat	0	Non-Exposed	33	33	33	33	33	33	33	33	33	33	33	33	33	33	33	33	33	33	33	33	33	33	33	33	33	33	33	33	33	33	33	33	33	33	32	33	33	0	33	33	0	0
				Exposed	33	33	33	33	33	33	33	33	33	33	33	33	33	33	33	33	33	33	33	33	33	33	33	33	33	33	0	33	33	0	33	33	0	33	0	0	33	0	0	32	0	0
		1:12	4.8	Non-Exposed	31	31	31	31	31	31	31	31	31	31	31	31	31	31	31	31	31	31	31	31	31	31	31	31	31	31	31	31	31	31	31	31	31	31	31	31	31	0	31	31	0	0
				Exposed	31	31	31	31	31	31	31	31	31	31	31	31	31	31	31	31	31	31	31	31	31	31	31	31	31	31	0	31	31	0	31	31	0	31	0	0	31	0	0	0	0	0
		2:12	9.5	Non-Exposed	29	29	29	29	29	29	29	29	29	29	29	29	29	29	29	29	29	29	29	29	29	29	29	29	29	29	29	29	29	29	29	29	29	29	0	29	0	0	29	0	0	0
				Exposed	29	29	29	29	29	29	29	29	29	29	29	29	29	29	29	29	29	29	29	29	29	29	29	29	29	29	0	29	0	0	29	0	0	0	0	0	0	0	0	0	0	0
		3:12	14.0	Non-Exposed	28	28	28	28	28	28	28	28	28	28	28	28	28	28	28	28	28	28	28	28	28	28	28	28	28	28	28	28	28	28	28	28	28	28	0	28	0	0	28	0	0	0
				Exposed	28	28	28	28	28	28	28	28	28	28	28	28	28	28	28	28	28	28	28	28	28	28	28	28	28	28	0	28	0	0	28	0	0	28	0	0	0	0	0	0	0	0
		4:12	18.4	Non-Exposed	28	28	28	28	28	28	28	28	28	28	28	28	28	28	28	28	28	28	28	28	28	28	28	28	28	28	28	28	28	28	28	28	28	28	0	28	0	0	28	0	0	0
				Exposed	28	28	28	28	28	28	28	28	28	28	28	28	28	28	28	28	28	28	28	28	28	28	28	28	28	28	0	28	0	0	28	0	0	0	0	0	0	0	0	0	0	0
		5:12	22.6	Non-Exposed	29	29	29	29	29	29	29	29	29	29	29	29	29	29	29	29	29	29	29	29	29	29	29	29	29	29	29	29	29	29	29	29	29	29	29	29	29	29	29	29	29	0
				Exposed	29	29	29	29	29	29	29	29	29	29	29	29	29	29	29	29	29	29	29	29	29	29	29	29	29	29	0	29	0	0	29	0	0	29	0	0	29	0	0	0	0	0
		6:12	26.6	Non-Exposed	30	30	30	30	30	30	30	30	30	30	30	30	30	30	30	30	30	30	30	30	30	30	30	30	30	30	30	30	30	30	30	30	30	30	30	30	30	0	30	30	0	0
				Exposed	30	30	30	30	30	30	30	30	30	30	30	30	30	30	30	30	30	30	30	30	30	30	30	30	30	30	30	30	0	30	0	0	30	0	0	30	0	0	30	0	0	0
		7:12	30.3	Non-Exposed	31	31	31	31	31	31	31	31	31	31	31	31	31	31	31	31	31	31	31	31	31	31	31	31	31	31	31	31	31	31	31	31	31	31	31	31	31	31	31	30	30	30
				Exposed	31	31	31	31	31	31	31	31	31	31	31	31	31	31	31	31	31	31	31	31	31	31	31	31	31	31	31	31	31	31	31	31	0	31	0	0	0	0	0	0	0	0
		8:12	33.7	Non-Exposed	32	32	32	32	32	32	32	32	32	32	32	32	32	32	32	32	32	32	32	32	32	32	32	32	32	32	32	32	32	32	32	32	32	32	32	32	32	32	32	31	31	31
				Exposed	32	32	32	32	32	32	32	32	32	32	32	32	32	32	32	32	32	32	32	32	32	32	32	32	32	32	32	32	32	32	32	32	0	32	0	0	0	0	0	0	0	0
		9:12	36.9	Non-Exposed	34	34	34	34	34	34	34	34	34	34	34	34	34	34	34	34	34	34	34	34	34	34	34	34	34	34	34	34	34	34	34	34	34	34	34	33	33	33	32	32	32	32
				Exposed	34	34	34	34	34	34	34	34	34	34	34	34	34	34	34	34	34	34	34	34	34	34	34	34	34	34	34	34	34	34	34	33	0	33	0	0	0	0	0	0	0	0
		10:12	39.8	Non-Exposed	36	36	36	36	36	36	36	36	36	36	36	36	36	36	36	36	36	36	36	36	36	36	36	36	36	36	36	36	36	36	36	36	35	35	35	34	34	34	34	34	34	32
				Exposed	36	36	36	36	36	36	36	36	36	36	36	36	36	36	36	36	36	36	36	36	36	36	36	36	36	36	36	36	35	0	35	33	0	33	0	0	0	0	0	0	0	0
		11:12	42.5	Non-Exposed	38	38	38	38	38	38	38	38	38	38	38	38	38	38	38	38	38	38	38	38	38	38	38	38	38	38	38	38	38	37	37	37	36	36	36	36	36	34	35	35	35	32
				Exposed	38	38	38	38	38	38	38	38	38	38	38	38	38	38	38	38	38	38	38	38	38	38	38	38	38	38	36	38	38	34	37	35	0	35	33	0	33	0	0	0	0	0
		12:12	45	Non-Exposed	40	40	40	40	40	40	40	40	40	40	40	40	40	40	40	40	40	40	40	40	40	40	40	40	40	40	40	39	39	39	39	39	39	38	38	37	37	37	34	36	36	32
				Exposed	40	40	40	40	40	40	40	40	40	40	40	40	40	40	40	40	40	40	40	40	40	40	40	40	40	36	39	38	33	38	35	0	35	33	0	33	0	0	0	0	0	0

Tamarack 2.3 Rail – Gable Flush-Mount on 30 Foot Maximum Mean Roof Height – Portrait – Panel Length = 96 Inches or Less

Ground Snow Load	Exposure Category	Roof Pitch	Roof Angle	Wind Speed (mph)	95			100			105			110			115			120			125			130			140			150			160			170			180			190		
				Roof Area	1	2	3	1	2	3	1	2	3	1	2	3	1	2	3	1	2	3	1	2	3	1	2	3	1	2	3	1	2	3	1	2	3	1	2	3	1	2	3	1	2	3
90	B	Flat	0	Non-Exposed	31	31	31	31	31	31	31	31	31	31	31	31	31	31	31	31	31	31	31	31	31	31	31	31	31	31	31	31	31	31	31	31	31	31	31	31	31	31	31	31	31	31
				Exposed	31	31	31	31	31	31	31	31	31	31	31	31	31	31	31	31	31	31	31	31	31	31	31	31	31	31	31	31	31	31	31	31	31	31	31	31	31	31	31	31	31	0
		1:12	4.8	Non-Exposed	29	29	29	29	29	29	29	29	29	29	29	29	29	29	29	29	29	29	29	29	29	29	29	29	29	29	29	29	29	29	29	29	29	29	29	29	29	29	29	29	29	29
				Exposed	29	29	29	29	29	29	29	29	29	29	29	29	29	29	29	29	29	29	29	29	29	29	29	29	29	29	29	29	29	29	29	29	29	29	29	29	29	29	29	29	29	0
		2:12	9.5	Non-Exposed	28	28	28	28	28	28	28	28	28	28	28	28	28	28	28	28	28	28	28	28	28	28	28	28	28	28	28	28	28	28	28	28	28	28	28	28	28	28	28	28	28	28
				Exposed	28	28	28	28	28	28	28	28	28	28	28	28	28	28	28	28	28	28	28	28	28	28	28	28	28	28	28	28	28	28	28	28	28	28	28	28	28	28	28	28	0	0
		3:12	14.0	Non-Exposed	26	26	26	26	26	26	26	26	26	26	26	26	26	26	26	26	26	26	26	26	26	26	26	26	26	26	26	26	26	26	26	26	26	26	26	26	26	26	26	26	26	26
				Exposed	26	26	26	26	26	26	26	26	26	26	26	26	26	26	26	26	26	26	26	26	26	26	26	26	26	26	26	26	26	26	26	26	26	26	26	26	26	26	26	26	0	0
		4:12	18.4	Non-Exposed	26	26	26	26	26	26	26	26	26	26	26	26	26	26	26	26	26	26	26	26	26	26	26	26	26	26	26	26	26	26	26	26	26	26	26	26	26	26	26	26	26	26
				Exposed	26	26	26	26	26	26	26	26	26	26	26	26	26	26	26	26	26	26	26	26	26	26	26	26	26	26	26	26	26	26	26	26	26	26	26	26	26	26	26	26	0	0
		5:12	22.6	Non-Exposed	27	27	27	27	27	27	27	27	27	27	27	27	27	27	27	27	27	27	27	27	27	27	27	27	27	27	27	27	27	27	27	27	27	27	27	27	27	27	27	27	27	27
				Exposed	27	27	27	27	27	27	27	27	27	27	27	27	27	27	27	27	27	27	27	27	27	27	27	27	27	27	27	27	27	27	27	27	27	27	27	27	27	27	27	27	27	0
		6:12	26.6	Non-Exposed	0	0	0	0	0	0	0	0	0	0	0	0	0	0	0	0	0	0	0	0	0	0	0	0	0	0	0	0	0	0	0	0	0	0	0	0	0	0	0	0	0	0
				Exposed	0	0	0	0	0	0	0	0	0	0	0	0	0	0	0	0	0	0	0	0	0	0	0	0	0	0	0	0	0	0	0	0	0	0	0	0	0	0	0	0	0	0
		7:12	30.3	Non-Exposed	0	0	0	0	0	0	0	0	0	0	0	0	0	0	0	0	0	0	0	0	0	0	0	0	0	0	0	0	0	0	0	0	0	0	0	0	0	0	0	0	0	0
				Exposed	0	0	0	0	0	0	0	0	0	0	0	0	0	0	0	0	0	0	0	0	0	0	0	0	0	0	0	0	0	0	0	0	0	0	0	0	0	0	0	0	0	0
		8:12	33.7	Non-Exposed	30	30	30	30	30	30	30	30	30	30	30	30	30	30	30	30	30	30	30	30	30	30	30	30	30	30	30	30	30	30	30	30	30	30	30	30	30	30	30	30	30	30
				Exposed	30	30	30	30	30	30	30	30	30	30	30	30	30	30	30	30	30	30	30	30	30	30	30	30	30	30	30	30	30	30	30	30	30	30	30	30	30	30	30	30	0	0
		9:12	36.9	Non-Exposed	32	32	32	32	32	32	32	32	32	32	32	32	32	32	32	32	32	32	32	32	32	32	32	32	32	32	32	32	32	32	32	32	32	32	32	32	32	32	32	32	32	32
				Exposed	32	32	32	32	32	32	32	32	32	32	32	32	32	32	32	32	32	32	32	32	32	32	32	32	32	32	32	32	32	32	32	32	32	32	32	32	32	32	32	32	0	0
		10:12	39.8	Non-Exposed	34	34	34	34	34	34	34	34	34	34	34	34	34	34	34	34	34	34	34	34	34	34	34	34	34	34	34	34	34	34	34	34	34	34	34	34	34	34	34	33	33	33
				Exposed	34	34	34	34	34	34	34	34	34	34	34	34	34	34	34	34	34	34	34	34	34	34	34	34	34	34	34	34	34	34	34	34	34	34	34	0	34	34	0	33	0	0
		11:12	42.5	Non-Exposed	36	36	36	36	36	36	36	36	36	36	36	36	36	36	36	36	36	36	36	36	36	36	36	36	36	36	36	36	36	36	36	36	36	36	36	36	35	35	35	35	35	35
				Exposed	36	36	36	36	36	36	36	36	36	36	36	36	36	36	36	36	36	36	36	36	36	36	36	36	36	36	36	36	36	34	36	36	0	35	34	0	34	0	0	0	0	0
		12:12	45	Non-Exposed	38	38	38	38	38	38	38	38	38	38	38	38	38	38	38	38	38	38	38	38	38	38	38	38	38	38	38	38	38	38	38	38	37	37	37	37	37	37	36	36	36	36
				Exposed	38	38	38	38	38	38	38	38	38	38	38	38	38	38	38	38	38	38	38	38	38	38	38	38	38	38	38	38	38	34	37	36	0	37	34	0	34	0	0	0	0	0
	C	Flat	0	Non-Exposed	31	31	31	31	31	31	31	31	31	31	31	31	31	31	31	31	31	31	31	31	31	31	31	31	31	31	31	31	31	31	31	31	31	31	31	31	31	31	31	31	31	0
				Exposed	31	31	31	31	31	31	31	31	31	31	31	31	31	31	31	31	31	31	31	31	31	31	31	31	31	31	31	31	31	0	31	31	0	31	0	0	31	0	0	0	0	0
		1:12	4.8	Non-Exposed	29	29	29	29	29	29	29	29	29	29	29	29	29	29	29	29	29	29	29	29	29	29	29	29	29	29	29	29	29	29	29	29	29	29	29	29	29	29	29	29	29	0
				Exposed	29	29	29	29	29	29	29	29	29	29	29	29	29	29	29	29	29	29	29	29	29	29	29	29	29	29	29	29	29	0	29	29	0	29	0	0	29	0	0	0	0	0
		2:12	9.5	Non-Exposed	28	28	28	28	28	28	28	28	28	28	28	28	28	28	28	28	28	28	28	28	28	28	28	28	28	28	28	28	28	28	28	28	28	28	28	28	28	28	28	28	0	0
				Exposed	28	28	28	28	28	28	28	28	28	28	28	28	28	28	28	28	28	28	28	28	28	28	28	28	28	28	28	28	28	0	28	0	0	28	0	0	28	0	0	0	0	0
		3:12	14.0	Non-Exposed	26	26	26	26	26	26	26	26	26	26	26	26	26	26	26	26	26	26	26	26	26	26	26	26	26	26	26	26	26	26	26	26	26	26	26	26	26	26	26	26	0	0
				Exposed	26	26	26	26	26	26	26	26	26	26	26	26	26	26	26	26	26	26	26	26	26	26	26	26	26	26	26	26	26	0	26	0	0	26	0	0	26	0	0	0	0	0
		4:12	18.4	Non-Exposed	26	26	26	26	26	26	26	26	26	26	26	26	26	26	26	26	26	26	26	26	26	26	26	26	26	26	26	26	26	26	26	26	26	26	26	26	26	26	26	26	0	0
				Exposed	26	26	26	26	26	26	26	26	26	26	26	26	26	26	26	26	26	26	26	26	26	26	26	26	26	26	26	26	26	0	26	0	0	26	0	0	26	0	0	0	0	0
		5:12	22.6	Non-Exposed	27	27	27	27	27	27	27	27	27	27	27	27	27	27	27	27	27	27	27	27	27	27	27	27	27	27	27	27	27	27	27	27	27	27	27	27	27	27	27	27	27	27
				Exposed	27	27	27	27	27	27	27	27	27	27	27	27	27	27	27	27	27	27	27	27	27	27	27	27	27	27	27	27	27	27	27	27	0	27	0	0	27	0	0	0	0	0
		6:12	26.6	Non-Exposed	0	0	0	0	0	0	0	0	0	0	0	0	0	0	0	0	0	0	0	0	0	0	0	0	0	0	0	0	0	0	0	0	0	0	0	0	0	0	0	0	0	0
				Exposed	0	0	0	0	0	0	0	0	0	0	0	0	0	0	0	0	0	0	0	0	0	0	0	0	0	0	0	0	0	0	0	0	0	0	0	0	0	0	0	0	0	0
		7:12	30.3	Non-Exposed	0	0	0	0	0	0	0	0	0	0	0	0	0	0	0	0	0	0	0	0	0	0	0	0	0	0	0	0	0	0	0	0	0	0	0	0	0	0	0	0	0	0
				Exposed	0	0	0	0	0	0	0	0	0	0	0	0	0	0	0	0	0	0	0	0	0	0	0	0	0	0	0	0	0	0	0	0	0	0	0	0	0	0	0	0	0	0
		8:12	33.7	Non-Exposed	30	30	30	30	30	30	30	30	30	30	30	30	30	30	30	30	30	30	30	30	30	30	30	30	30	30	30	30	30	30	30	30	30	30	30	30	30	30	30	30	30	30
				Exposed	30	30	30	30	30	30	30	30	30	30	30	30	30	30	30	30	30	30	30	30	30	30	30	30	30	30	30	30	30	30	30	30	30	30	30	30	30	30	0	0	0	0
		9:12	36.9	Non-Exposed	32	32	32	32	32	32	32	32	32	32	32	32	32	32	32	32	32	32	32	32	32	32	32	32	32	32	32	32	32	32	32	32	32	32	32	32	32	32	31	31	31	31
				Exposed	32	32	32	32	32	32	32	32	32	32	32	32	32	32	32	32	32	32	32	32	32	32	32	32	32	32	32	32	32	0	32	32	0	32	0	0	0	0	0	0	0	0
		10:12	39.8	Non-Exposed	34	34	34	34	34	34	34	34	34	34	34	34	34	34	34	34	34	34	34	34	34	34	34	34	34	34	34	34	34	34	34	34	33	33	33	33	33	33	32	32	32	32
				Exposed	34	34	34	34	34	34	34	34	34	34	34	34	34	34	34	34	34	34	34	34	34	34	34	34	34	34	34	34	34	0	33	33	0	33	0	0	0	0	0	0	0	0
		11:12	42.5	Non-Exposed	36	36	36	36	36	36	36	36	36	36	36	36	36	36	36	36	36	36	36	36	36	36	36	36	36	36	36	36	36	36	36	36	35	35	35	34	34	34	34	34	34	32
				Exposed	36	36	36	36	36	36	36	36	36	36	36	36	36	36	36	36	36	36	36	36	36	36	36	36	36	36	36	36	36	34	36	35	0	35	33	0	33	0	0	0	0	0
		12:12	45	Non-Exposed	38	38	38	38	38	38	38	38	38	38	38	38	38	38	38	38	38	38	38	38	38	38	38	38	38	38	38	38	38	38	38	38	37	37	37	36	36	36	36	36	34	35	35	32
				Exposed	38	38	38	38	38	38	38	38	38	38	38	38	38	38	38	38	38	38	38	38	38	38	38	38	38	38	36	38	38	33	37	35	0	35	33	0	33	0	0	0	0	0
	D	Flat	0	Non-Exposed	31	31	31	31	31	31	31	31	31	31	31	31	31	31	31	31	31	31	31	31	31	31	31	31	31	31	31	31	31	31	31	31	31	31	31	31	31	31	0	31	31	0
				Exposed	31	31	31	31	31	31	31	31	31	31	31	31	31	31	31	31	31	31	31	31	31	31	31	31	31	31	0	31	31	0	31	31	0	31	0	0	31	0	0	0	0	0
		1:12	4.8	Non-Exposed	29	29	29	29	29	29	29	29	29	29	29	29	29	29	29	29	29	29	29	29	29	29	29	29	29	29	29	29	29	29	29	29	29	29	29	29	29	29	0	29	29	0
				Exposed	29	29	29	29	29	29	29	29	29	29	29	29	29	29	29	29	29	29	29	29	29	29	29	29	29	29	0	29	29	0	29	29	0	29	0	0	29	0	0	0	0	0
		2:12	9.5	Non-Exposed	28	28	28	28	28	28	28	28	28	28	28	28	28	28	28	28	28	28	28	28	28	28	28	28	28	28	28	28	28	28	28	28	28	28	28	28	28	28	0	28	0	0
				Exposed	28	28	28	28	28	28	28	28	28	28	28	28	28	28	28	28	28	28	28	28	28	28	28	28	28	28	0	28	0	0	28	0	0	28	0	0	0	0	0	0	0	0
		3:12	14.0	Non-Exposed	26	26	26	26	26	26	26	26	26	26	26	26	26	26	26	26	26	26	26	26	26	26	26	26	26	26	26	26	26	26	26	26	26	26	0	26	0	0	26	0	0	0
				Exposed	26	26	26	26	26	26	26	26	26	26	26	26	26	26	26	26	26	26	26	26	26	26	26	26	26	26	0	26	0	0	26	0	0	26	0	0	0	0	0	0	0	0
		4:12	18.4	Non-Exposed	26	26	26	26	26	26	26	26	26	26	26	26	26	26	26	26	26	26	26	26	26	26	26	26	26	26	26	26	26	26	26	26	26	26	0	26	0	0	26	0	0	0
				Exposed	26	26	26	26	26	26	26	26	26	26	26	26	26	26	26	26	26	26	26	26	26	26	26	26	26	26	0	26	0	0	26	0	0	26	0	0	0	0	0	0	0	0
		5:12	22.6	Non-Exposed	27	27	27	27	27	27	27	27	27	27	27	27	27	27	27	27	27	27	27	27	27	27	27	27	27	27	27	27	27	27	27	27	27	27	27	27	27	27	27	27	27	0
				Exposed	27	27	27	27	27	27	27	27	27	27	27	27	27	27	27	27	27	27	27	27	27	27	27	27	27	27	27	27	0	27	0	0	27	0	0	27	0	0	27	0	0	0
		6:12	26.6	Non-Exposed	0	0	0	0	0	0	0	0	0	0	0	0	0	0	0	0	0	0	0	0	0	0	0	0	0	0	0	0	0	0	0	0	0	0	0	0	0	0	0	0	0	0
				Exposed	0	0	0	0	0	0	0	0	0	0	0	0	0	0	0	0	0	0	0	0	0	0	0	0	0	0	0	0	0	0	0	0	0	0	0	0	0	0	0	0	0	0
		7:12	30.3	Non-Exposed	0	0	0	0	0	0	0	0	0	0	0	0	0	0	0	0	0	0	0	0	0	0	0	0	0	0	0	0	0	0	0	0	0	0	0	0	0	0	0	0	0	0
				Exposed	0	0	0	0	0	0	0	0	0	0	0	0	0	0	0	0	0	0	0	0	0	0	0	0	0	0	0	0	0	0	0	0	0	0	0	0	0	0	0	0	0	0
		8:12	33.7	Non-Exposed	30	30	30	30	30	30	30	30	30	30	30	30	30	30	30	30	30	30	30	30	30	30	30	30	30	30	30	30	30	30	30	30	30	30	30	30	30	30	30	30	30	30
				Exposed	30	30	30	30	30	30	30	30	30	30	30	30	30	30	30	30	30	30	30	30	30	30	30	30	30	30	30	30	30	0	30	30	0	30	0	0	0	0	0	0	0	0
		9:12	36.9	Non-Exposed	32	32	32	32	32	32	32	32	32	32	32	32	32	32	32	32	32	32	32	32	32	32	32	32	32	32	32	32	32	32	32	32	32	32	32	32	32	32	31	31	31	31
				Exposed	32	32	32	32	32	32	32	32	32	32	32	32	32	32	32	32	32	32	32	32	32	32	32	32	32	32	32	32	32	0	32	32	0	32	0	0	0	0	0	0	0	0
		10:12	39.8	Non-Exposed	34	34	34	34	34	34	34	34	34	34	34	34	34	34	34	34	34	34	34	34	34	34	34	34	34	34	34	34	34	34	34	34	33	33	33	33	33	33	32	32	32	32
				Exposed	34	34	34	34	34	34	34	34	34	34	34	34	34	34	34	34	34	34	34	34	34	34	34	34	34	34	34	34	34	0	33	33	0	33	0	0	0	0	0	0	0	0
		11:12	42.5	Non-Exposed	36	36	36	36	36	36	36	36	36	36	36	36	36	36	36	36	36	36	36	36	36	36	36	36	36	36	36	36	36	36	36	36	35	35	35	34	34	34	34	34	34	32
				Exposed	36	36	36	36	36	36	36	36	36	36	36	36	36	36	36	36	36	36	36	36	36	36	36	36	36	36	36	36	36	34	36	35	0	35	33	0	33	0	0	0	0	0
		12:12	45	Non-Exposed	38	38	38	38	38	38	38	38	38	38	38	38	38	38	38	38	38	38	38	38	38	38	38	38	38	38	38	38	38	38	38	38	37	37	37	36	36	36	36	36	34	35	35	32
				Exposed	38	38	38	38	38	38	38	38	38	38	38	38	38	38	38	38	38	38	38	38	38	38	38	38	38	38	36	38	38	33	37	35	0	35	33	0	33	0	0	0	0	0

Tamarack 2.3 Rail – Gable Flush-Mount on 30 Foot Maximum Mean Roof Height – Portrait – Panel Length = 96 Inches or Less

Ground Snow Load	Exposure Category	Roof Pitch	Roof Angle	Wind Speed (mph)	95			100			105			110			115			120			125			130			140			150			160			170			180			190		
				Roof Area	1	2	3	1	2	3	1	2	3	1	2	3	1	2	3	1	2	3	1	2	3	1	2	3	1	2	3	1	2	3	1	2	3	1	2	3	1	2	3	1	2	3
		Flat	0	Non-Exposed	30	30	30	30	30	30	30	30	30	30	30	30	30	30	30	30	30	30	30	30	30	30	30	30	30	30	30	30	30	30	30	30	30	30	30	30	30	30	30	30	30	30
				Exposed	30	30	30	30	30	30	30	30	30	30	30	30	30	30	30	30	30	30	30	30	30	30	30	30	30	30	30	30	30	30	30	30	30	30	30	30	30	30	30	30	30	0
		1:12	4.8	Non-Exposed	28	28	28	28	28	28	28	28	28	28	28	28	28	28	28	28	28	28	28	28	28	28	28	28	28	28	28	28	28	28	28	28	28	28	28	28	28	28	28	28	28	28
				Exposed	28	28	28	28	28	28	28	28	28	28	28	28	28	28	28	28	28	28	28	28	28	28	28	28	28	28	28	28	28	28	28	28	28	28	28	28	28	28	0	28	28	0
		2:12	9.5	Non-Exposed	26	26	26	26	26	26	26	26	26	26	26	26	26	26	26	26	26	26	26	26	26	26	26	26	26	26	26	26	26	26	26	26	26	26	26	26	26	26	26	26	26	26
				Exposed	26	26	26	26	26	26	26	26	26	26	26	26	26	26	26	26	26	26	26	26	26	26	26	26	26	26	26	26	26	26	26	26	26	26	26	26	26	26	0	26	0	0
		3:12	14.0	Non-Exposed	25	25	25	25	25	25	25	25	25	25	25	25	25	25	25	25	25	25	25	25	25	25	25	25	25	25	25	25	25	25	25	25	25	25	25	25	25	25	25	25	25	25
				Exposed	25	25	25	25	25	25	25	25	25	25	25	25	25	25	25	25	25	25	25	25	25	25	25	25	25	25	25	25	25	25	25	25	25	25	25	25	25	25	0	25	0	0
		4:12	18.4	Non-Exposed	25	25	25	25	25	25	25	25	25	25	25	25	25	25	25	25	25	25	25	25	25	25	25	25	25	25	25	25	25	25	25	25	25	25	25	25	25	25	25	25	25	25
				Exposed	25	25	25	25	25	25	25	25	25	25	25	25	25	25	25	25	25	25	25	25	25	25	25	25	25	25	25	25	25	25	25	25	25	25	25	25	25	25	0	25	0	0
		5:12	22.6	Non-Exposed	0	0	0	0	0	0	0	0	0	0	0	0	0	0	0	0	0	0	0	0	0	0	0	0	0	0	0	0	0	0	0	0	0	0	0	0	0	0	0	0	0	0
				Exposed	0	0	0	0	0	0	0	0	0	0	0	0	0	0	0	0	0	0	0	0	0	0	0	0	0	0	0	0	0	0	0	0	0	0	0	0	0	0	0	0	0	0
	B	6:12	26.6	Non-Exposed	0	0	0	0	0	0	0	0	0	0	0	0	0	0	0	0	0	0	0	0	0	0	0	0	0	0	0	0	0	0	0	0	0	0	0	0	0	0	0	0	0	0
				Exposed	0	0	0	0	0	0	0	0	0	0	0	0	0	0	0	0	0	0	0	0	0	0	0	0	0	0	0	0	0	0	0	0	0	0	0	0	0	0	0	0	0	0
		7:12	30.3	Non-Exposed	0	0	0	0	0	0	0	0	0	0	0	0	0	0	0	0	0	0	0	0	0	0	0	0	0	0	0	0	0	0	0	0	0	0	0	0	0	0	0	0	0	0
				Exposed	0	0	0	0	0	0	0	0	0	0	0	0	0	0	0	0	0	0	0	0	0	0	0	0	0	0	0	0	0	0	0	0	0	0	0	0	0	0	0	0	0	0
		8:12	33.7	Non-Exposed	0	0	0	0	0	0	0	0	0	0	0	0	0	0	0	0	0	0	0	0	0	0	0	0	0	0	0	0	0	0	0	0	0	0	0	0	0	0	0	0	0	0
				Exposed	0	0	0	0	0	0	0	0	0	0	0	0	0	0	0	0	0	0	0	0	0	0	0	0	0	0	0	0	0	0	0	0	0	0	0	0	0	0	0	0	0	0
		9:12	36.9	Non-Exposed	0	0	0	0	0	0	0	0	0	0	0	0	0	0	0	0	0	0	0	0	0	0	0	0	0	0	0	0	0	0	0	0	0	0	0	0	0	0	0	0	0	0
				Exposed	0	0	0	0	0	0	0	0	0	0	0	0	0	0	0	0	0	0	0	0	0	0	0	0	0	0	0	0	0	0	0	0	0	0	0	0	0	0	0	0	0	0
		10:12	39.8	Non-Exposed	32	32	32	32	32	32	32	32	32	32	32	32	32	32	32	32	32	32	32	32	32	32	32	32	32	32	32	32	32	32	32	32	32	32	32	32	32	32	32	32	32	32
				Exposed	32	32	32	32	32	32	32	32	32	32	32	32	32	32	32	32	32	32	32	32	32	32	32	32	32	32	32	32	32	32	32	32	32	32	32	0	32	32	0	32	0	0
		11:12	42.5	Non-Exposed	34	34	34	34	34	34	34	34	34	34	34	34	34	34	34	34	34	34	34	34	34	34	34	34	34	34	34	34	34	34	34	34	34	34	34	34	34	34	33	33	33	33
				Exposed	34	34	34	34	34	34	34	34	34	34	34	34	34	34	34	34	34	34	34	34	34	34	34	34	34	34	34	34	34	34	34	34	34	34	34	0	34	34	0	33	0	0
		12:12	45	Non-Exposed	36	36	36	36	36	36	36	36	36	36	36	36	36	36	36	36	36	36	36	36	36	36	36	36	36	36	36	36	36	36	36	36	36	36	36	36	35	35	35	35	35	35
				Exposed	36	36	36	36	36	36	36	36	36	36	36	36	36	36	36	36	36	36	36	36	36	36	36	36	46	36	36	36	36	36	36	36	34	36	36	0	35	34	0	34	0	0
		Flat	0	Non-Exposed	30	30	30	30	30	30	30	30	30	30	30	30	30	30	30	30	30	30	30	30	30	30	30	30	30	30	30	30	30	30	30	30	30	30	30	30	30	30	30	30	30	0
				Exposed	30	30	30	30	30	30	30	30	30	30	30	30	30	30	30	30	30	30	30	30	30	30	30	30	30	30	30	30	30	30	30	30	30	30	30	30	30	0	30	0	0	0
		1:12	4.8	Non-Exposed	28	28	28	28	28	28	28	28	28	28	28	28	28	28	28	28	28	28	28	28	28	28	28	28	28	28	28	28	28	28	28	28	28	28	28	28	28	28	28	28	28	0
				Exposed	28	28	28	28	28	28	28	28	28	28	28	28	28	28	28	28	28	28	28	28	28	28	28	28	28	28	28	28	28	0	28	28	0	28	0	0	28	0	0	0	0	0
		2:12	9.5	Non-Exposed	26	26	26	26	26	26	26	26	26	26	26	26	26	26	26	26	26	26	26	26	26	26	26	26	26	26	26	26	26	26	26	26	26	26	26	26	26	26	0	26	0	0
				Exposed	26	26	26	26	26	26	26	26	26	26	26	26	26	26	26	26	26	26	26	26	26	26	26	26	26	26	26	26	26	0	26	0	0	26	0	0	26	0	0	0	0	0
		3:12	14.0	Non-Exposed	25	25	25	25	25	25	25	25	25	25	25	25	25	25	25	25	25	25	25	25	25	25	25	25	25	25	25	25	25	25	25	25	25	25	25	25	25	25	0	25	25	0
				Exposed	25	25	25	25	25	25	25	25	25	25	25	25	25	25	25	25	25	25	25	25	25	25	25	25	25	25	25	25	25	0	25	0	0	25	0	0	25	0	0	0	0	0
		4:12	18.4	Non-Exposed	25	25	25	25	25	25	25	25	25	25	25	25	25	25	25	25	25	25	25	25	25	25	25	25	25	25	25	25	25	25	25	25	25	25	25	25	25	25	0	25	25	0
				Exposed	25	25	25	25	25	25	25	25	25	25	25	25	25	25	25	25	25	25	25	25	25	25	25	25	25	25	25	25	25	0	25	0	0	25	0	0	25	0	0	0	0	0
		5:12	22.6	Non-Exposed	0	0	0	0	0	0	0	0	0	0	0	0	0	0	0	0	0	0	0	0	0	0	0	0	0	0	0	0	0	0	0	0	0	0	0	0	0	0	0	0	0	0
				Exposed	0	0	0	0	0	0	0	0	0	0	0	0	0	0	0	0	0	0	0	0	0	0	0	0	0	0	0	0	0	0	0	0	0	0	0	0	0	0	0	0	0	0
100	C	6:12	26.6	Non-Exposed	0	0	0	0	0	0	0	0	0	0	0	0	0	0	0	0	0	0	0	0	0	0	0	0	0	0	0	0	0	0	0	0	0	0	0	0	0	0	0	0	0	0
				Exposed	0	0	0	0	0	0	0	0	0	0	0	0	0	0	0	0	0	0	0	0	0	0	0	0	0	0	0	0	0	0	0	0	0	0	0	0	0	0	0	0	0	0
		7:12	30.3	Non-Exposed	0	0	0	0	0	0	0	0	0	0	0	0	0	0	0	0	0	0	0	0	0	0	0	0	0	0	0	0	0	0	0	0	0	0	0	0	0	0	0	0	0	0
				Exposed	0	0	0	0	0	0	0	0	0	0	0	0	0	0	0	0	0	0	0	0	0	0	0	0	0	0	0	0	0	0	0	0	0	0	0	0	0	0	0	0	0	0
		8:12	33.7	Non-Exposed	0	0	0	0	0	0	0	0	0	0	0	0	0	0	0	0	0	0	0	0	0	0	0	0	0	0	0	0	0	0	0	0	0	0	0	0	0	0	0	0	0	0
				Exposed	0	0	0	0	0	0	0	0	0	0	0	0	0	0	0	0	0	0	0	0	0	0	0	0	0	0	0	0	0	0	0	0	0	0	0	0	0	0	0	0	0	0
		9:12	36.9	Non-Exposed	0	0	0	0	0	0	0	0	0	0	0	0	0	0	0	0	0	0	0	0	0	0	0	0	0	0	0	0	0	0	0	0	0	0	0	0	0	0	0	0	0	0
				Exposed	0	0	0	0	0	0	0	0	0	0	0	0	0	0	0	0	0	0	0	0	0	0	0	0	0	0	0	0	0	0	0	0	0	0	0	0	0	0	0	0	0	0
		10:12	39.8	Non-Exposed	32	32	32	32	32	32	32	32	32	32	32	32	32	32	32	32	32	32	32	32	32	32	32	32	32	32	32	32	32	32	32	32	32	32	32	32	32	32	31	31	31	31
				Exposed	32	32	32	32	32	32	32	32	32	32	32	32	32	32	32	32	32	32	32	32	32	32	32	32	32	32	32	32	32	32	32	32	0	32	32	0	32	0	0	0	0	0
		11:12	42.5	Non-Exposed	34	34	34	34	34	34	34	34	34	34	34	34	34	34	34	34	34	34	34	34	34	34	34	34	34	34	34	34	34	34	34	34	34	34	34	34	33	33	33	32	32	32
				Exposed	34	34	34	34	34	34	34	34	34	34	34	34	34	34	34	34	34	34	34	34	34	34	34	34	34	34	34	34	34	34	34	34	0	34	33	0	33	0	0	0	0	0
		12:12	45	Non-Exposed	36	36	36	36	36	36	36	36	36	36	36	36	36	36	36	36	36	36	36	36	36	36	36	36	36	36	36	36	36	36	36	36	36	35	35	35	34	34	34	34	34	32
				Exposed	36	36	36	36	36	36	36	36	36	36	36	36	36	36	36	36	36	36	36	36	36	36	36	36	36	36	36	36	36	33	36	35	0	35	33	0	33	0	0	0	0	0

Tamarack 2.3 Rail – Gable Flush-Mount on 30 Foot Maximum Mean Roof Height – Portrait – Panel Length = 96 Inches or Less

Ground Snow Load	Exposure Category	Roof Pitch	Roof Angle	Wind Speed (mph)	95			100			105			110			115			120			125			130			140			150			160			170			180			190		
				Roof Area	1	2	3	1	2	3	1	2	3	1	2	3	1	2	3	1	2	3	1	2	3	1	2	3	1	2	3	1	2	3	1	2	3	1	2	3	1	2	3	1	2	3
110	B	Flat	0	Non-Exposed	28	28	28	28	28	28	28	28	28	28	28	28	28	28	28	28	28	28	28	28	28	28	28	28	28	28	28	28	28	28	28	28	28	28	28	28	28	28	28	28	28	28
				Exposed	28	28	28	28	28	28	28	28	28	28	28	28	28	28	28	28	28	28	28	28	28	28	28	28	28	28	28	28	28	28	28	28	28	28	28	28	28	28	28	28	28	0
		1:12	4.8	Non-Exposed	26	26	26	26	26	26	26	26	26	26	26	26	26	26	26	26	26	26	26	26	26	26	26	26	26	26	26	26	26	26	26	26	26	26	26	26	26	26	26	26	26	26
				Exposed	26	26	26	26	26	26	26	26	26	26	26	26	26	26	26	26	26	26	26	26	26	26	26	26	26	26	26	26	26	26	26	26	26	26	26	26	26	26	0	26	26	0
		2:12	9.5	Non-Exposed	25	25	25	25	25	25	25	25	25	25	25	25	25	25	25	25	25	25	25	25	25	25	25	25	25	25	25	25	25	25	25	25	25	25	25	25	25	25	25	25	25	25
				Exposed	25	25	25	25	25	25	25	25	25	25	25	25	25	25	25	25	25	25	25	25	25	25	25	25	25	25	25	25	25	25	25	25	25	25	25	25	25	25	0	25	0	0
		3:12	14.0	Non-Exposed	24	24	24	24	24	24	24	24	24	24	24	24	24	24	24	24	24	24	24	24	24	24	24	24	24	24	24	24	24	24	24	24	24	24	24	24	24	24	24	24	24	24
				Exposed	24	24	24	24	24	24	24	24	24	24	24	24	24	24	24	24	24	24	24	24	24	24	24	24	24	24	24	24	24	24	24	24	24	24	24	24	24	24	0	24	0	0
		4:12	18.4	Non-Exposed	0	0	0	0	0	0	0	0	0	0	0	0	0	0	0	0	0	0	0	0	0	0	0	0	0	0	0	0	0	0	0	0	0	0	0	0	0	0	0	0	0	0
				Exposed	0	0	0	0	0	0	0	0	0	0	0	0	0	0	0	0	0	0	0	0	0	0	0	0	0	0	0	0	0	0	0	0	0	0	0	0	0	0	0	0	0	0
		5:12	22.6	Non-Exposed	0	0	0	0	0	0	0	0	0	0	0	0	0	0	0	0	0	0	0	0	0	0	0	0	0	0	0	0	0	0	0	0	0	0	0	0	0	0	0	0	0	0
				Exposed	0	0	0	0	0	0	0	0	0	0	0	0	0	0	0	0	0	0	0	0	0	0	0	0	0	0	0	0	0	0	0	0	0	0	0	0	0	0	0	0	0	0
		6:12	26.6	Non-Exposed	0	0	0	0	0	0	0	0	0	0	0	0	0	0	0	0	0	0	0	0	0	0	0	0	0	0	0	0	0	0	0	0	0	0	0	0	0	0	0	0	0	0
				Exposed	0	0	0	0	0	0	0	0	0	0	0	0	0	0	0	0	0	0	0	0	0	0	0	0	0	0	0	0	0	0	0	0	0	0	0	0	0	0	0	0	0	0
		7:12	30.3	Non-Exposed	0	0	0	0	0	0	0	0	0	0	0	0	0	0	0	0	0	0	0	0	0	0	0	0	0	0	0	0	0	0	0	0	0	0	0	0	0	0	0	0	0	0
				Exposed	0	0	0	0	0	0	0	0	0	0	0	0	0	0	0	0	0	0	0	0	0	0	0	0	0	0	0	0	0	0	0	0	0	0	0	0	0	0	0	0	0	0
		8:12	33.7	Non-Exposed	0	0	0	0	0	0	0	0	0	0	0	0	0	0	0	0	0	0	0	0	0	0	0	0	0	0	0	0	0	0	0	0	0	0	0	0	0	0	0	0	0	0
				Exposed	0	0	0	0	0	0	0	0	0	0	0	0	0	0	0	0	0	0	0	0	0	0	0	0	0	0	0	0	0	0	0	0	0	0	0	0	0	0	0	0	0	0
		9:12	36.9	Non-Exposed	0	0	0	0	0	0	0	0	0	0	0	0	0	0	0	0	0	0	0	0	0	0	0	0	0	0	0	0	0	0	0	0	0	0	0	0	0	0	0	0	0	0
				Exposed	0	0	0	0	0	0	0	0	0	0	0	0	0	0	0	0	0	0	0	0	0	0	0	0	0	0	0	0	0	0	0	0	0	0	0	0	0	0	0	0	0	0
		10:12	39.8	Non-Exposed	0	0	0	0	0	0	0	0	0	0	0	0	0	0	0	0	0	0	0	0	0	0	0	0	0	0	0	0	0	0	0	0	0	0	0	0	0	0	0	0	0	0
				Exposed	0	0	0	0	0	0	0	0	0	0	0	0	0	0	0	0	0	0	0	0	0	0	0	0	0	0	0	0	0	0	0	0	0	0	0	0	0	0	0	0	0	0
		11:12	42.5	Non-Exposed	0	0	0	0	0	0	0	0	0	0	0	0	0	0	0	0	0	0	0	0	0	0	0	0	0	0	0	0	0	0	0	0	0	0	0	0	0	0	0	0	0	0
				Exposed	0	0	0	0	0	0	0	0	0	0	0	0	0	0	0	0	0	0	0	0	0	0	0	0	0	0	0	0	0	0	0	0	0	0	0	0	0	0	0	0	0	0
		12:12	45	Non-Exposed	34	34	34	34	34	34	34	34	34	34	34	34	34	34	34	34	34	34	34	34	34	34	34	34	34	34	34	34	34	34	34	34	34	34	34	34	34	34	34	34	34	34
				Exposed	34	34	34	34	34	34	34	34	34	34	34	34	34	34	34	34	34	34	34	34	34	34	34	34	34	34	34	34	34	34	34	34	34	34	34	34	34	34	34	34	34	34
	C	Flat	0	Non-Exposed	28	28	28	28	28	28	28	28	28	28	28	28	28	28	28	28	28	28	28	28	28	28	28	28	28	28	28	28	28	28	28	28	28	28	28	28	28	28	28	28	28	0
				Exposed	28	28	28	28	28	28	28	28	28	28	28	28	28	28	28	28	28	28	28	28	28	28	28	28	28	28	28	28	28	28	28	28	28	28	28	28	28	0	28	0	0	0
		1:12	4.8	Non-Exposed	26	26	26	26	26	26	26	26	26	26	26	26	26	26	26	26	26	26	26	26	26	26	26	26	26	26	26	26	26	26	26	26	26	26	26	26	26	26	26	26	26	0
				Exposed	26	26	26	26	26	26	26	26	26	26	26	26	26	26	26	26	26	26	26	26	26	26	26	26	26	26	26	26	26	0	26	26	0	26	0	0	26	0	0	26	0	0
		2:12	9.5	Non-Exposed	25	25	25	25	25	25	25	25	25	25	25	25	25	25	25	25	25	25	25	25	25	25	25	25	25	25	25	25	25	25	25	25	25	25	25	25	25	25	0	25	0	0
				Exposed	25	25	25	25	25	25	25	25	25	25	25	25	25	25	25	25	25	25	25	25	25	25	25	25	25	25	25	25	25	0	25	0	0	25	0	0	25	0	0	0	0	0
		3:12	14.0	Non-Exposed	24	24	24	24	24	24	24	24	24	24	24	24	24	24	24	24	24	24	24	24	24	24	24	24	24	24	24	24	24	24	24	24	24	24	24	24	24	24	0	24	24	0
				Exposed	24	24	24	24	24	24	24	24	24	24	24	24	24	24	24	24	24	24	24	24	24	24	24	24	24	24	24	24	0	24	0	0	24	0	0	24	0	0	0	0	0	0
		4:12	18.4	Non-Exposed	0	0	0	0	0	0	0	0	0	0	0	0	0	0	0	0	0	0	0	0	0	0	0	0	0	0	0	0	0	0	0	0	0	0	0	0	0	0	0	0	0	0
				Exposed	0	0	0	0	0	0	0	0	0	0	0	0	0	0	0	0	0	0	0	0	0	0	0	0	0	0	0	0	0	0	0	0	0	0	0	0	0	0	0	0	0	0
		5:12	22.6	Non-Exposed	0	0	0	0	0	0	0	0	0	0	0	0	0	0	0	0	0	0	0	0	0	0	0	0	0	0	0	0	0	0	0	0	0	0	0	0	0	0	0	0	0	0
				Exposed	0	0	0	0	0	0	0	0	0	0	0	0	0	0	0	0	0	0	0	0	0	0	0	0	0	0	0	0	0	0	0	0	0	0	0	0	0	0	0	0	0	0
		6:12	26.6	Non-Exposed	0	0	0	0	0	0	0	0	0	0	0	0	0	0	0	0	0	0	0	0	0	0	0	0	0	0	0	0	0	0	0	0	0	0	0	0	0	0	0	0	0	0
				Exposed	0	0	0	0	0	0	0	0	0	0	0	0	0	0	0	0	0	0	0	0	0	0	0	0	0	0	0	0	0	0	0	0	0	0	0	0	0	0	0	0	0	0
		7:12	30.3	Non-Exposed	0	0	0	0	0	0	0	0	0	0	0	0	0	0	0	0	0	0	0	0	0	0	0	0	0	0	0	0	0	0	0	0	0	0	0	0	0	0	0	0	0	0
				Exposed	0	0	0	0	0	0	0	0	0	0	0	0	0	0	0	0	0	0	0	0	0	0	0	0	0	0	0	0	0	0	0	0	0	0	0	0	0	0	0	0	0	0
		8:12	33.7	Non-Exposed	0	0	0	0	0	0	0	0	0	0	0	0	0	0	0	0	0	0	0	0	0	0	0	0	0	0	0	0	0	0	0	0	0	0	0	0	0	0	0	0	0	0
				Exposed	0	0	0	0	0	0	0	0	0	0	0	0	0	0	0	0	0	0	0	0	0	0	0	0	0	0	0	0	0	0	0	0	0	0	0	0	0	0	0	0	0	0
		9:12	36.9	Non-Exposed	0	0	0	0	0	0	0	0	0	0	0	0	0	0	0	0	0	0	0	0	0	0	0	0	0	0	0	0	0	0	0	0	0	0	0	0	0	0	0	0	0	0
				Exposed	0	0	0	0	0	0	0	0	0	0	0	0	0	0	0	0	0	0	0	0	0	0	0	0	0	0	0	0	0	0	0	0	0	0	0	0	0	0	0	0	0	0
		10:12	39.8	Non-Exposed	0	0	0	0	0	0	0	0	0	0	0	0	0	0	0	0	0	0	0	0	0	0	0	0	0	0	0	0	0	0	0	0	0	0	0	0	0	0	0	0	0	0
				Exposed	0	0	0	0	0	0	0	0	0	0	0	0	0	0	0	0	0	0	0	0	0	0	0	0	0	0	0	0	0	0	0	0	0	0	0	0	0	0	0	0	0	0
		11:12	42.5	Non-Exposed	0	0	0	0	0	0	0	0	0	0	0	0	0	0	0	0	0	0	0	0	0	0	0	0	0	0	0	0	0	0	0	0	0	0	0	0	0	0	0	0	0	0
				Exposed	0	0	0	0	0	0	0	0	0	0	0	0	0	0	0	0	0	0	0	0	0	0	0	0	0	0	0	0	0	0	0	0	0	0	0	0	0	0	0	0	0	0
		12:12	45	Non-Exposed	34	34	34	34	34	34	34	34	34	34	34	34	34	34	34	34	34	34	34	34	34	34	34	34	34	34	34	34	34	34	34	34	34	34	34	34	34	34	34	34	34	34
				Exposed	34	34	34	34	34	34	34	34	34	34	34	34	34	34	34	34	34	34	34	34	34	34	34	34	34	34	34	34	34	34	34	34	34	34	34	34	34	34	0	34	0	0
	D	Flat	0	Non-Exposed	28	28	28	28	28	28	28	28	28	28	28	28	28	28	28	28	28	28	28	28	28	28	28	28	28	28	28	28	28	28	28	28	28	28	28	28	28	28	28	28	28	0
				Exposed	28	28	28	28	28	28	28	28	28	28	28	28	28	28	28	28	28	28	28	28	28	28	28	28	28	28	0	28	28	0	28	28	0	28	0	0	28	0	0	28	0	0
		1:12	4.8	Non-Exposed	26	26	26	26	26	26	26	26	26	26	26	26	26	26	26	26	26	26	26	26	26	26	26	26	26	26	26	26	26	26	26	26	26	26	26	26	26	26	0	26	26	0
				Exposed	26	26	26	26	26	26	26	26	26	26	26	26	26	26	26	26	26	26	26	26	26	26	26	26	26	26	0	26	26	0	26	26	0	26	0	0	26	0	0	0	0	0
		2:12	9.5	Non-Exposed	25	25	25	25	25	25	25	25	25	25	25	25	25	25	25	25	25	25	25	25	25	25	25	25	25	25	25	25	25	25	25	25	25	25	25	25	25	0	25	0	0	0
				Exposed	25	25	25	25	25	25	25	25	25	25	25	25	25	25	25	25	25	25	25	25	25	25	25	25	25	25	0	25	0	0	25	0	0	25	0	0	0	0	0	0	0	0
		3:12	14.0	Non-Exposed	24	24	24	24	24	24	24	24	24	24	24	24	24	24	24	24	24	24	24	24	24	24	24	24	24	24	24	24	24	24	24	24	24	24	24	0	24	0	0	24	0	0
				Exposed	24	24	24	24	24	24	24	24	24	24	24	24	24	24	24	24	24	24	24	24	24	24	24	24	24	24	0	24	0	0	24	0	0	0	0	0	0	0	0	0	0	0
		4:12	18.4	Non-Exposed	0	0	0	0	0	0	0	0	0	0	0	0	0	0	0	0	0	0	0	0	0	0	0	0	0	0	0	0	0	0	0	0	0	0	0	0	0	0	0	0	0	0
				Exposed	0	0	0	0	0	0	0	0	0	0	0	0	0	0	0	0	0	0	0	0	0	0	0	0	0	0	0	0	0	0	0	0	0	0	0	0	0	0	0	0	0	0
		5:12	22.6	Non-Exposed	0	0	0	0	0	0	0	0	0	0	0	0	0	0	0	0	0	0	0	0	0	0	0	0	0	0	0	0	0	0	0	0	0	0	0	0	0	0	0	0	0	0
				Exposed	0	0	0	0	0	0	0	0	0	0	0	0	0	0	0	0	0	0	0	0	0	0	0	0	0	0	0	0	0	0	0	0	0	0	0	0	0	0	0	0	0	0
		6:12	26.6	Non-Exposed	0	0	0	0	0	0	0	0	0	0	0	0	0	0	0	0	0	0	0	0	0	0	0	0	0	0	0	0	0	0	0	0	0	0	0	0	0	0	0	0	0	0
				Exposed	0	0	0	0	0	0	0	0	0	0	0	0	0	0	0	0	0	0	0	0	0	0	0	0	0	0	0	0	0	0	0	0	0	0	0	0	0	0	0	0	0	0
		7:12	30.3	Non-Exposed	0	0	0	0	0	0	0	0	0	0	0	0	0	0	0	0	0	0	0	0	0	0	0	0	0	0	0	0	0	0	0	0	0	0	0	0	0	0	0	0	0	0
				Exposed	0	0	0	0	0	0	0	0	0	0	0	0	0	0	0	0	0	0	0	0	0	0	0	0	0	0	0	0	0	0	0	0	0	0	0	0	0	0	0	0	0	0
		8:12	33.7	Non-Exposed	0	0	0	0	0	0	0	0	0	0	0	0	0	0	0	0	0	0	0	0	0	0	0	0	0	0	0	0	0	0	0	0	0	0	0	0	0	0	0	0	0	0
				Exposed	0	0	0	0	0	0	0	0	0	0	0	0	0	0	0	0	0	0	0	0	0	0	0	0	0	0	0	0	0	0	0	0	0	0	0	0	0	0	0	0	0	0
		9:12	36.9	Non-Exposed	0	0	0	0	0	0	0	0	0	0	0	0	0	0	0	0	0	0	0	0	0	0	0	0	0	0	0	0	0	0	0	0	0	0	0	0	0	0	0	0	0	0
				Exposed	0	0	0	0	0	0	0	0	0	0	0	0	0	0	0	0	0	0	0	0	0	0	0	0	0	0	0	0	0	0	0	0	0	0	0	0	0	0	0	0	0	0
		10:12	39.8	Non-Exposed	0	0	0	0	0	0	0	0	0	0	0	0	0	0	0	0	0	0	0	0	0	0	0	0	0	0	0	0	0	0	0	0	0	0	0	0	0	0	0	0	0	0
				Exposed	0	0	0	0	0	0	0	0	0	0	0	0	0	0	0	0	0	0	0	0	0	0	0	0	0	0	0	0	0	0	0	0	0	0	0	0	0	0	0	0	0	0
		11:12	42.5	Non-Exposed	0	0	0	0	0	0	0	0	0	0	0	0	0	0	0	0	0	0	0	0	0	0	0	0	0	0	0	0	0	0	0	0	0	0	0	0	0	0	0	0	0	0
				Exposed	0	0	0	0	0	0	0	0	0	0	0	0	0	0	0	0	0	0	0	0	0	0	0	0	0	0	0	0	0	0	0	0	0	0	0	0	0	0	0	0	0	0
		12:12	45	Non-Exposed	34	34	34	34	34	34	34	34	34	34	34	34	34	34	34	34	34	34	34	34	34	34	34	34	34	34	34	34	34	34	34	34	34	34	34	33	33	33	33	33	32
				Exposed	34	34	34	34	34	34	34	34	34	34	34	34	34	34	34	34	34	34	34	34	34	34	34	34	34	34	34	34	33	34	34	0	34	33	0	33	0	0	0	0	0

Tamarack 2.3 Rail – Gable Flush-Mount on 30 Foot Maximum Mean Roof Height – Portrait – Panel Length = 96 Inches or Less

Ground Snow Load	Exposure Category	Roof Pitch	Roof Angle	Wind Speed (mph)	95			100			105			110			115			120			125			130			140			150			160			170			180			190		
				Roof Area	1	2	3	1	2	3	1	2	3	1	2	3	1	2	3	1	2	3	1	2	3	1	2	3	1	2	3	1	2	3	1	2	3	1	2	3	1	2	3	1	2	3
120	B	Flat	0	Non-Exposed	27	27	27	27	27	27	27	27	27	27	27	27	27	27	27	27	27	27	27	27	27	27	27	27	27	27	27	27	27	27	27	27	27	27	27	27	27	27	27	27	27	27
				Exposed	27	27	27	27	27	27	27	27	27	27	27	27	27	27	27	27	27	27	27	27	27	27	27	27	27	27	27	27	27	27	27	27	27	27	27	27	27	27	27	27	27	0
		1:12	4.8	Non-Exposed	25	25	25	25	25	25	25	25	25	25	25	25	25	25	25	25	25	25	25	25	25	25	25	25	25	25	25	25	25	25	25	25	25	25	25	25	25	25	25	25	25	25
				Exposed	25	25	25	25	25	25	25	25	25	25	25	25	25	25	25	25	25	25	25	25	25	25	25	25	25	25	25	25	25	25	25	25	25	25	25	25	25	25	0	25	25	0
		2:12	9.5	Non-Exposed	24	24	24	24	24	24	24	24	24	24	24	24	24	24	24	24	24	24	24	24	24	24	24	24	24	24	24	24	24	24	24	24	24	24	24	24	24	24	24	24	24	24
				Exposed	24	24	24	24	24	24	24	24	24	24	24	24	24	24	24	24	24	24	24	24	24	24	24	24	24	24	24	24	24	24	24	24	24	24	24	24	24	24	0	24	0	0
		3:12	14.0	Non-Exposed	23	23	23	23	23	23	23	23	23	23	23	23	23	23	23	23	23	23	23	23	23	23	23	23	23	23	23	23	23	23	23	23	23	23	23	23	23	23	23	23	23	23
				Exposed	23	23	23	23	23	23	23	23	23	23	23	23	23	23	23	23	23	23	23	23	23	23	23	23	23	23	23	23	23	23	23	23	23	23	23	23	23	23	0	23	0	0
		4:12	18.4	Non-Exposed	0	0	0	0	0	0	0	0	0	0	0	0	0	0	0	0	0	0	0	0	0	0	0	0	0	0	0	0	0	0	0	0	0	0	0	0	0	0	0	0	0	0
				Exposed	0	0	0	0	0	0	0	0	0	0	0	0	0	0	0	0	0	0	0	0	0	0	0	0	0	0	0	0	0	0	0	0	0	0	0	0	0	0	0	0	0	0
		5:12	22.6	Non-Exposed	0	0	0	0	0	0	0	0	0	0	0	0	0	0	0	0	0	0	0	0	0	0	0	0	0	0	0	0	0	0	0	0	0	0	0	0	0	0	0	0	0	0
				Exposed	0	0	0	0	0	0	0	0	0	0	0	0	0	0	0	0	0	0	0	0	0	0	0	0	0	0	0	0	0	0	0	0	0	0	0	0	0	0	0	0	0	0
		6:12	26.6	Non-Exposed	0	0	0	0	0	0	0	0	0	0	0	0	0	0	0	0	0	0	0	0	0	0	0	0	0	0	0	0	0	0	0	0	0	0	0	0	0	0	0	0	0	0
				Exposed	0	0	0	0	0	0	0	0	0	0	0	0	0	0	0	0	0	0	0	0	0	0	0	0	0	0	0	0	0	0	0	0	0	0	0	0	0	0	0	0	0	0
		7:12	30.3	Non-Exposed	0	0	0	0	0	0	0	0	0	0	0	0	0	0	0	0	0	0	0	0	0	0	0	0	0	0	0	0	0	0	0	0	0	0	0	0	0	0	0	0	0	0
				Exposed	0	0	0	0	0	0	0	0	0	0	0	0	0	0	0	0	0	0	0	0	0	0	0	0	0	0	0	0	0	0	0	0	0	0	0	0	0	0	0	0	0	0
		8:12	33.7	Non-Exposed	0	0	0	0	0	0	0	0	0	0	0	0	0	0	0	0	0	0	0	0	0	0	0	0	0	0	0	0	0	0	0	0	0	0	0	0	0	0	0	0	0	0
				Exposed	0	0	0	0	0	0	0	0	0	0	0	0	0	0	0	0	0	0	0	0	0	0	0	0	0	0	0	0	0	0	0	0	0	0	0	0	0	0	0	0	0	0
		9:12	36.9	Non-Exposed	0	0	0	0	0	0	0	0	0	0	0	0	0	0	0	0	0	0	0	0	0	0	0	0	0	0	0	0	0	0	0	0	0	0	0	0	0	0	0	0	0	0
				Exposed	0	0	0	0	0	0	0	0	0	0	0	0	0	0	0	0	0	0	0	0	0	0	0	0	0	0	0	0	0	0	0	0	0	0	0	0	0	0	0	0	0	0
		10:12	39.8	Non-Exposed	0	0	0	0	0	0	0	0	0	0	0	0	0	0	0	0	0	0	0	0	0	0	0	0	0	0	0	0	0	0	0	0	0	0	0	0	0	0	0	0	0	0
				Exposed	0	0	0	0	0	0	0	0	0	0	0	0	0	0	0	0	0	0	0	0	0	0	0	0	0	0	0	0	0	0	0	0	0	0	0	0	0	0	0	0	0	0
		11:12	42.5	Non-Exposed	0	0	0	0	0	0	0	0	0	0	0	0	0	0	0	0	0	0	0	0	0	0	0	0	0	0	0	0	0	0	0	0	0	0	0	0	0	0	0	0	0	0
				Exposed	0	0	0	0	0	0	0	0	0	0	0	0	0	0	0	0	0	0	0	0	0	0	0	0	0	0	0	0	0	0	0	0	0	0	0	0	0	0	0	0	0	0
		12:12	45	Non-Exposed	0	0	0	0	0	0	0	0	0	0	0	0	0	0	0	0	0	0	0	0	0	0	0	0	0	0	0	0	0	0	0	0	0	0	0	0	0	0	0	0	0	0
				Exposed	0	0	0	0	0	0	0	0	0	0	0	0	0	0	0	0	0	0	0	0	0	0	0	0	0	0	0	0	0	0	0	0	0	0	0	0	0	0	0	0	0	0
	C	Flat	0	Non-Exposed	27	27	27	27	27	27	27	27	27	27	27	27	27	27	27	27	27	27	27	27	27	27	27	27	27	27	27	27	27	27	27	27	27	27	27	27	27	27	27	27	27	0
				Exposed	27	27	27	27	27	27	27	27	27	27	27	27	27	27	27	27	27	27	27	27	27	27	27	27	27	27	27	27	27	27	27	27	27	27	27	0	27	0	0	27	0	0
		1:12	4.8	Non-Exposed	25	25	25	25	25	25	25	25	25	25	25	25	25	25	25	25	25	25	25	25	25	25	25	25	25	25	25	25	25	25	25	25	25	25	25	25	25	25	25	25	25	0
				Exposed	25	25	25	25	25	25	25	25	25	25	25	25	25	25	25	25	25	25	25	25	25	25	25	25	25	25	25	25	25	0	25	25	0	25	0	0	25	0	0	25	0	0
		2:12	9.5	Non-Exposed	24	24	24	24	24	24	24	24	24	24	24	24	24	24	24	24	24	24	24	24	24	24	24	24	24	24	24	24	24	24	24	24	24	24	24	0	24	24	0	24	0	0
				Exposed	24	24	24	24	24	24	24	24	24	24	24	24	24	24	24	24	24	24	24	24	24	24	24	24	24	24	24	24	0	24	0	0	24	0	0	24	0	0	24	0	0	0
		3:12	14.0	Non-Exposed	23	23	23	23	23	23	23	23	23	23	23	23	23	23	23	23	23	23	23	23	23	23	23	23	23	23	23	23	23	23	23	23	23	23	23	23	23	23	0	23	23	0
				Exposed	23	23	23	23	23	23	23	23	23	23	23	23	23	23	23	23	23	23	23	23	23	23	23	23	23	23	23	23	0	23	0	0	23	0	0	23	0	0	0	0	0	0
		4:12	18.4	Non-Exposed	0	0	0	0	0	0	0	0	0	0	0	0	0	0	0	0	0	0	0	0	0	0	0	0	0	0	0	0	0	0	0	0	0	0	0	0	0	0	0	0	0	0
				Exposed	0	0	0	0	0	0	0	0	0	0	0	0	0	0	0	0	0	0	0	0	0	0	0	0	0	0	0	0	0	0	0	0	0	0	0	0	0	0	0	0	0	0
		5:12	22.6	Non-Exposed	0	0	0	0	0	0	0	0	0	0	0	0	0	0	0	0	0	0	0	0	0	0	0	0	0	0	0	0	0	0	0	0	0	0	0	0	0	0	0	0	0	0
				Exposed	0	0	0	0	0	0	0	0	0	0	0	0	0	0	0	0	0	0	0	0	0	0	0	0	0	0	0	0	0	0	0	0	0	0	0	0	0	0	0	0	0	0
		6:12	26.6	Non-Exposed	0	0	0	0	0	0	0	0	0	0	0	0	0	0	0	0	0	0	0	0	0	0	0	0	0	0	0	0	0	0	0	0	0	0	0	0	0	0	0	0	0	0
				Exposed	0	0	0	0	0	0	0	0	0	0	0	0	0	0	0	0	0	0	0	0	0	0	0	0	0	0	0	0	0	0	0	0	0	0	0	0	0	0	0	0	0	0
		7:12	30.3	Non-Exposed	0	0	0	0	0	0	0	0	0	0	0	0	0	0	0	0	0	0	0	0	0	0	0	0	0	0	0	0	0	0	0	0	0	0	0	0	0	0	0	0	0	0
				Exposed	0	0	0	0	0	0	0	0	0	0	0	0	0	0	0	0	0	0	0	0	0	0	0	0	0	0	0	0	0	0	0	0	0	0	0	0	0	0	0	0	0	0
		8:12	33.7	Non-Exposed	0	0	0	0	0	0	0	0	0	0	0	0	0	0	0	0	0	0	0	0	0	0	0	0	0	0	0	0	0	0	0	0	0	0	0	0	0	0	0	0	0	0
				Exposed	0	0	0	0	0	0	0	0	0	0	0	0	0	0	0	0	0	0	0	0	0	0	0	0	0	0	0	0	0	0	0	0	0	0	0	0	0	0	0	0	0	0
		9:12	36.9	Non-Exposed	0	0	0	0	0	0	0	0	0	0	0	0	0	0	0	0	0	0	0	0	0	0	0	0	0	0	0	0	0	0	0	0	0	0	0	0	0	0	0	0	0	0
				Exposed	0	0	0	0	0	0	0	0	0	0	0	0	0	0	0	0	0	0	0	0	0	0	0	0	0	0	0	0	0	0	0	0	0	0	0	0	0	0	0	0	0	0
		10:12	39.8	Non-Exposed	0	0	0	0	0	0	0	0	0	0	0	0	0	0	0	0	0	0	0	0	0	0	0	0	0	0	0	0	0	0	0	0	0	0	0	0	0	0	0	0	0	0
				Exposed	0	0	0	0	0	0	0	0	0	0	0	0	0	0	0	0	0	0	0	0	0	0	0	0	0	0	0	0	0	0	0	0	0	0	0	0	0	0	0	0	0	0
		11:12	42.5	Non-Exposed	0	0	0	0	0	0	0	0	0	0	0	0	0	0	0	0	0	0	0	0	0	0	0	0	0	0	0	0	0	0	0	0	0	0	0	0	0	0	0	0	0	0
				Exposed	0	0	0	0	0	0	0	0	0	0	0	0	0	0	0	0	0	0	0	0	0	0	0	0	0	0	0	0	0	0	0	0	0	0	0	0	0	0	0	0	0	0
		12:12	45	Non-Exposed	0	0	0	0	0	0	0	0	0	0	0	0	0	0	0	0	0	0	0	0	0	0	0	0	0	0	0	0	0	0	0	0	0	0	0	0	0	0	0	0	0	0
				Exposed	0	0	0	0	0	0	0	0	0	0	0	0	0	0	0	0	0	0	0	0	0	0	0	0	0	0	0	0	0	0	0	0	0	0	0	0	0	0	0	0	0	0
	D	Flat	0	Non-Exposed	27	27	27	27	27	27	27	27	27	27	27	27	27	27	27	27	27	27	27	27	27	27	27	27	27	27	27	27	27	27	27	27	27	27	27	27	27	27	0	27	27	0
				Exposed	27	27	27	27	27	27	27	27	27	27	27	27	27	27	27	27	27	27	27	27	27	27	27	27	27	27	0	27	27	0	27	27	0	27	0	0	27	0	0	27	0	0
		1:12	4.8	Non-Exposed	25	25	25	25	25	25	25	25	25	25	25	25	25	25	25	25	25	25	25	25	25	25	25	25	25	25	25	25	25	25	25	25	25	25	25	25	25	25	0	25	25	0
				Exposed	25	25	25	25	25	25	25	25	25	25	25	25	25	25	25	25	25	25	25	25	25	25	25	25	25	25	0	25	25	0	25	25	0	25	0	0	25	0	0	0	0	0
		2:12	9.5	Non-Exposed	24	24	24	24	24	24	24	24	24	24	24	24	24	24	24	24	24	24	24	24	24	24	24	24	24	24	24	24	24	24	24	24	24	24	24	0	24	0	0	24	0	0
				Exposed	24	24	24	24	24	24	24	24	24	24	24	24	24	24	24	24	24	24	24	24	24	24	24	24	24	24	0	24	0	0	24	0	0	24	0	0	0	0	0	0	0	0
		3:12	14.0	Non-Exposed	23	23	23	23	23	23	23	23	23	23	23	23	23	23	23	23	23	23	23	23	23	23	23	23	23	23	23	23	23	23	23	23	23	23	23	0	23	0	0	23	0	0
				Exposed	23	23	23	23	23	23	23	23	23	23	23	23	23	23	23	23	23	23	23	23	23	23	23	23	23	23	0	23	0	0	23	0	0	23	0	0	0	0	0	0	0	0
		4:12	18.4	Non-Exposed	0	0	0	0	0	0	0	0	0	0	0	0	0	0	0	0	0	0	0	0	0	0	0	0	0	0	0	0	0	0	0	0	0	0	0	0	0	0	0	0	0	0
				Exposed	0	0	0	0	0	0	0	0	0	0	0	0	0	0	0	0	0	0	0	0	0	0	0	0	0	0	0	0	0	0	0	0	0	0	0	0	0	0	0	0	0	0
		5:12	22.6	Non-Exposed	0	0	0	0	0	0	0	0	0	0	0	0	0	0	0	0	0	0	0	0	0	0	0	0	0	0	0	0	0	0	0	0	0	0	0	0	0	0	0	0	0	0
				Exposed	0	0	0	0	0	0	0	0	0	0	0	0	0	0	0	0	0	0	0	0	0	0	0	0	0	0	0	0	0	0	0	0	0	0	0	0	0	0	0	0	0	0
		6:12	26.6	Non-Exposed	0	0	0	0	0	0	0	0	0	0	0	0	0	0	0	0	0	0	0	0	0	0	0	0	0	0	0	0	0	0	0	0	0	0	0	0	0	0	0	0	0	0
				Exposed	0	0	0	0	0	0	0	0	0	0	0	0	0	0	0	0	0	0	0	0	0	0	0	0	0	0	0	0	0	0	0	0	0	0	0	0	0	0	0	0	0	0
		7:12	30.3	Non-Exposed	0	0	0	0	0	0	0	0	0	0	0	0	0	0	0	0	0	0	0	0	0	0	0	0	0	0	0	0	0	0	0	0	0	0	0	0	0	0	0	0	0	0
				Exposed	0	0	0	0	0	0	0	0	0	0	0	0	0	0	0	0	0	0	0	0	0	0	0	0	0	0	0	0	0	0	0	0	0	0	0	0	0	0	0	0	0	0
		8:12	33.7	Non-Exposed	0	0	0	0	0	0	0	0	0	0	0	0	0	0	0	0	0	0	0	0	0	0	0	0	0	0	0	0	0	0	0	0	0	0	0	0	0	0	0	0	0	0
				Exposed	0	0	0	0	0	0	0	0	0	0	0	0	0	0	0	0	0	0	0	0	0	0	0	0	0	0	0	0	0	0	0	0	0	0	0	0	0	0	0	0	0	0
		9:12	36.9	Non-Exposed	0	0	0	0	0	0	0	0	0	0	0	0	0	0	0	0	0	0	0	0	0	0	0	0	0	0	0	0	0	0	0	0	0	0	0	0	0	0	0	0	0	0
				Exposed	0	0	0	0	0	0	0	0	0	0	0	0	0	0	0	0	0	0	0	0	0	0	0	0	0	0	0	0	0	0	0	0	0	0	0	0	0	0	0	0	0	0
		10:12	39.8	Non-Exposed	0	0	0	0	0	0	0	0	0	0	0	0	0	0	0	0	0	0	0	0	0	0	0	0	0	0	0	0	0	0	0	0	0	0	0	0	0	0	0	0	0	0
				Exposed	0	0	0	0	0	0	0	0	0	0	0	0	0	0	0	0	0	0	0	0	0	0	0	0	0	0	0	0	0	0	0	0	0	0	0	0	0	0	0	0	0	0
		11:12	42.5	Non-Exposed	0	0	0	0	0	0	0	0	0	0	0	0	0	0	0	0	0	0	0	0	0	0	0	0	0	0	0	0	0	0	0	0	0	0	0	0	0	0	0	0	0	0
				Exposed	0	0	0	0	0	0	0	0	0	0	0	0	0	0	0	0	0	0	0	0	0	0	0	0	0	0	0	0	0	0	0	0	0	0	0	0	0	0	0	0	0	0
		12:12	45	Non-Exposed	0	0	0	0	0	0	0	0	0	0	0	0	0	0	0	0	0	0	0	0	0	0	0	0	0	0	0	0	0	0	0	0	0	0	0	0	0	0	0	0	0	0
				Exposed	0	0	0	0	0	0	0	0	0	0	0	0	0	0	0	0	0	0	0	0	0	0	0	0	0	0	0	0	0	0	0	0	0	0	0	0	0	0	0	0	0	0

Tamarack 2.3 Rail – Hip Flush-Mount on 30 Foot Maximum Mean Roof Height – Portrait – Panel Length = 96 Inches or Less

Ground Snow Load	Exposure Category	Roof Pitch	Roof Angle	Wind Speed (mph)	95			100			105			110			115			120			125			130			140			150			160			170			180			190		
				Roof Area	1	2	3	1	2	3	1	2	3	1	2	3	1	2	3	1	2	3	1	2	3	1	2	3	1	2	3	1	2	3	1	2	3	1	2	3	1	2	3	1	2	3
0	B	2:12	9.5	Non-Exposed	69	79	79	69	79	79	69	79	79	69	79	79	69	79	79	69	79	79	69	78	74	65	74	71	58	67	64	54	62	59	50	57	54	46	52	50	43	49	46	41	46	43
				Exposed	69	79	79	69	79	76	66	75	72	62	71	67	58	67	64	55	63	60	53	60	57	50	57	54	46	52	49	42	48	45	39	44	42	37	41	39	34	38	36	32	35	34
		3:12	14.0	Non-Exposed	68	78	78	68	78	78	68	78	78	68	78	78	68	78	78	68	78	78	68	78	74	64	74	70	58	67	64	54	61	58	50	56	54	46	52	50	43	49	46	41	45	43
				Exposed	68	78	78	68	78	76	66	75	71	61	70	67	58	66	63	55	63	60	52	60	57	50	57	54	46	52	49	42	47	45	39	44	42	37	41	39	34	38	36	32	35	34
		4:12	18.4	Non-Exposed	67	78	78	67	78	78	67	78	78	67	78	78	67	78	78	67	78	77	67	77	73	64	73	70	58	66	63	53	61	58	50	56	53	46	52	50	43	48	46	41	45	43
				Exposed	67	78	78	67	78	75	65	74	70	61	70	66	57	66	63	55	62	59	52	59	56	50	56	54	46	51	49	42	47	45	39	44	42	37	40	39	34	38	36	32	35	34
		5:12	22.6	Non-Exposed	66	77		66	77		66	77		66	77		66	77		66	77		66	77		66	77		66	75		66	69		62	63		57	58		53	54		50	51	
				Exposed	66	77		66	77		66	77		66	77		66	74		66	70		66	67		63	64		57	58		52	53		48	49		44	45		41	42		38	39	
		6:12	26.6	Non-Exposed	65	76		65	76		65	76		65	76		65	76		65	76		65	76		65	76		65	74		65	68		62	63		57	58		53	54		49	51	
				Exposed	65	76		65	76		65	76		65	76		65	74		65	70		65	66		62	63		57	58		52	53		48	49		44	45		41	42		38	39	
		7:12	30.3	Non-Exposed	64	76	76	64	76	76	64	76	76	64	76	76	64	76	76	64	76	76	64	76	76	64	74	76	64	67	71	63	61	63	58	56	57	54	52	52	50	48	47	47	45	44
				Exposed	64	76	76	64	76	76	64	76	76	64	71	75	64	67	70	64	63	65	61	60	61	59	56	57	54	51	51	49	47	46	45	43	42	42	39	38	39	37	35	36	34	32
		8:12	33.7	Non-Exposed	64	75	75	64	75	75	64	75	75	64	75	75	64	75	75	64	75	75	64	75	75	64	74	75	64	67	70	62	61	63	58	56	56	54	51	51	50	48	47	47	44	43
				Exposed	64	75	75	64	75	75	64	75	75	64	70	75	64	66	69	64	63	65	61	59	61	58	56	57	53	51	51	49	46	46	45	43	41	42	39	38	39	37	35	36	34	32
		9:12	36.9	Non-Exposed	63	75	75	63	75	75	63	75	75	63	75	75	63	75	75	63	75	75	63	75	75	63	73	75	63	66	69	62	61	62	57	56	56	54	51	51	50	48	47	47	44	43
				Exposed	63	75	75	63	75	75	63	74	75	63	70	74	63	66	69	63	62	64	60	59	60	58	56	57	53	51	51	49	46	46	45	43	41	42	39	38	39	37	35	36	34	32
		10:12	39.8	Non-Exposed	63	75	75	63	75	75	63	75	75	63	75	75	63	75	75	63	75	75	63	75	75	63	73	75	63	66	69	61	60	62	57	55	56	53	51	51	50	47	47	47	44	43
				Exposed	63	75	75	63	75	75	63	74	75	63	70	73	63	66	68	63	62	64	60	59	60	57	56	56	53	51	50	49	46	45	45	42	41	42	39	38	39	36	35	36	34	32
		11:12	42.5	Non-Exposed	62	74	74	62	74	74	62	74	74	62	74	74	62	74	74	62	74	74	62	74	74	62	73	74	62	66	69	61	60	62	57	55	56	53	51	51	50	47	47	47	44	43
				Exposed	62	74	74	62	74	74	62	74	74	62	69	73	62	65	68	62	62	64	59	59	60	57	56	56	52	50	50	48	46	45	45	42	41	42	39	38	39	36	35	36	34	32
		12:12	45	Non-Exposed	62	74	74	62	74	74	62	74	74	62	74	74	62	74	74	62	74	74	62	74	74	62	72	74	62	66	68	60	60	61	56	55	56	53	51	51	49	47	47	46	44	43
				Exposed	62	74	74	62	74	74	62	73	74	62	69	72	62	65	68	62	62	63	59	58	59	57	55	56	52	50	50	48	46	45	45	42	41	41	39	38	39	36	35	36	34	32
	C	2:12	9.5	Non-Exposed	69	79	79	69	79	79	69	79	75	65	74	70	61	70	66	57	66	63	55	63	60	52	60	57	48	54	51	44	50	47	41	46	44	38	42	40	36	39	38	34	37	35
				Exposed	60	69	65	56	64	61	53	60	57	50	57	54	48	54	51	45	51	48	43	48	46	41	46	44	38	42	40	35	38	37	33	36	34	30	33	0	29	0	0	27	0	0
		3:12	14.0	Non-Exposed	68	78	78	68	78	78	68	78	74	64	74	70	60	69	66	57	66	62	54	62	59	52	59	56	48	54	51	44	49	47	41	46	43	38	42	40	36	39	37	34	37	35
				Exposed	59	68	65	56	64	61	53	60	57	50	57	54	47	54	51	45	51	48	43	48	46	41	46	44	38	42	40	35	38	37	32	35	34	30	33	0	29	0	0	27	0	0
		4:12	18.4	Non-Exposed	67	78	78	67	78	78	67	77	74	64	73	69	60	69	65	57	65	62	54	62	59	52	59	56	48	54	51	44	49	47	41	45	43	38	42	40	36	39	37	34	37	35
				Exposed	59	68	65	56	64	60	52	60	57	50	56	54	47	53	51	45	51	48	43	48	46	41	46	44	38	42	40	35	38	36	32	35	34	30	33	0	28	0	0	27	0	0
		5:12	22.6	Non-Exposed	66	77		66	77		66	77		66	77		66	77		66	73		66	70		66	66		59	60		54	55		50	51		46	47		43	44		40	41	
				Exposed	66	76		66	72		66	67		63	63		59	60		56	57		53	54		50	51		46	47		42	43		38	40		36	37		33	34		31	32	
		6:12	26.6	Non-Exposed	65	76		65	76		65	76		65	76		65	76		65	73		65	69		65	66		59	60		54	55		50	51		46	47		43	44		40	41	
				Exposed	65	76		65	71		65	67		62	63		59	60		55	56		53	54		50	51		45	47		42	43		38	40		35	37		33	34		31	32	
		7:12	30.3	Non-Exposed	64	76	76	64	76	76	64	76	76	64	74	76	64	70	74	64	66	69	64	62	64	61	59	60	56	53	54	51	49	48	47	45	44	44	41	40	41	38	37	38	36	34
				Exposed	64	69	72	64	64	67	62	60	61	59	56	57	56	53	53	53	50	50	50	47	47	47	45	44	43	41	39	40	37	36	37	34	33	34	32	0	32	0	0	30	0	0
		8:12	33.7	Non-Exposed	64	75	75	64	75	75	64	75	75	64	74	75	64	69	73	64	65	68	63	62	64	61	59	60	56	53	53	51	49	48	47	45	44	44	41	40	41	38	37	38	36	34
				Exposed	64	68	72	64	64	66	61	60	61	58	56	57	55	53	53	52	50	50	50	47	47	47	45	44	43	41	39	40	37	36	37	34	32	34	32	0	32	0	0	30	0	0
		9:12	36.9	Non-Exposed	63	75	75	63	75	75	63	75	75	63	73	75	63	69	73	63	65	68	63	62	64	60	59	60	55	53	53	51	48	48	47	45	44	43	41	40	40	38	37	38	36	34
				Exposed	63	68	71	63	63	66	61	59	61	58	56	56	55	53	53	52	50	49	50	47	46	47	45	44	43	41	39	39	37	36	36	34	32	34	32	0	31	0	0	29	0	0
		10:12	39.8	Non-Exposed	63	75	75	63	75	75	63	75	75	63	73	75	63	69	72	63	65	67	62	61	63	60	58	59	55	53	53	51	48	48	47	44	43	43	41	40	40	38	37	38	36	34
				Exposed	63	68	71	63	63	65	60	59	60	57	56	56	54	52	53	52	50	49	49	47	46	47	45	44	43	41	39	39	37	36	36	34	32	34	32	0	31	0	0	29	0	0
		11:12	42.5	Non-Exposed	62	74	74	62	74	74	62	74	74	62	72	74	62	68	72	62	65	67	62	61	63	59	58	59	54	53	53	50	48	48	47	44	43	43	41	40	40	38	37	38	35	34
				Exposed	62	67	70	62	63	65	60	59	60	57	55	56	54	52	52	52	50	49	49	47	46	47	45	44	43	41	39	39	37	35	36	34	32	34	32	0	31	0	0	29	0	0
		12:12	45	Non-Exposed	62	74	74	62	74	74	62	74	74	62	72	74	62	68	71	62	64	67	61	61	63	59	58	59	54	53	53	50	48	48	47	44	43	43	41	40	40	38	36	38	35	34
				Exposed	62	67	70	62	63	65	59	59	60	57	55	56	54	52	52	51	49	49	49	47	46	47	45	44	43	40	39	39	37	35	36	34	32	34	31	0	31	0	0	29	0	0
	D	2:12	9.5	Non-Exposed	69	79	77	66	75	71	61	71	67	58	66	63	55	63	59	52	59	56	50	56	53	47	53	51	43	49	46	40	45	42	37	41	39	35	38	36	33	36	34	31	33	0
				Exposed	54	62	59	51	58	55	48	54	52	45	51	49	43	48	46	41	46	44	39	44	41	37	41	39	34	38	36	32	35	33	30	32	0	28	0	0	26	0	0	0	0	0
		3:12	14.0	Non-Exposed	68	78	76	65	75	71	61	70	67	57	66	63	54	62	59	52	59	56	49	56	53	47	53	51	43	49	46	40	44	42	37	41	39	35	38	36	32	36	34	31	33	0
				Exposed	54	61	58	51	57	55	48	54	51	45	51	48	43	48	46	41	46	43	39	43	41	37	41	39	34	38	36	32	35	33	30	32	0	28	0	0	0	0	0	0	0	0
		4:12	18.4	Non-Exposed	67	78	75	65	74	70	61	70	66	57	65	62	54	62	59	52	59	56	49	56	53	47	53	50	43	48	46	40	44	42	37	41	39	35	38	36	32	35	34	31	33	0
				Exposed	53	61	58	50	57	54	48	54	51	45	51	48	43	48	46	41	46	43	39	43	41	37	41	39	34	38	36	32	35	33	29	32	0	28	0	0	0	0	0	0	0	0
		5:12	22.6	Non-Exposed	66	77		66	77		66	77		66	74		66	70		65	66		62	63		59	60		53	54		49	50		45	46		41	43		38	40		36	37	
				Exposed	66	69		63	64		59	60		56	57		53	54		50	51		47	49		45	46		41	42		37	39		35	36		32	33		30	0		28	0	
		6:12	26.6	Non-Exposed	65	76		65	76		65	76		65	73		65	69		64	66		61	62		58	59		53	54		48	50		45	46		41	42		38	40		36	37	
				Exposed	65	68		63	64		59	60		56	57		53	54		50	51		47	48		45	46		41	42		37	39		34	36		32	33		30	0		28	0	
		7:12	30.3	Non-Exposed	64	76	76	64	75	76	64	70	75	64	66	69	64	62	64	61	59	60	58	56	56	55	53	53	50	48	47	46	44	42	42	40	39	39	37	35	37	34	33	34	32	30
				Exposed	63	61	63	59	57	58	56	54	54	53	50	50	50	47	47	47	45	44	45	42	41	43	40	39	39	37	35	36	33	32	33	0	0	31	0	0	29	0	0	27	0	0
		8:12	33.7	Non-Exposed	64	75	75	64	75	75	64	70	74	64	66	69	63	62	64	60	58	60	57	55	56	55	53	53	50	48	47	46	43	42	42	40	39	39	37	35	37	34	33	34	32	30
				Exposed	62	61	63	59	57	58	56	53	53	53	50	50	50	47	47	47	45	44	45	42	41	43	40	39	39	36	35	36	33	32	33	0	0	31	0	0	29	0	0	27	0	0
		9:12	36.9	Non-Exposed	63	75	75	63	74	75	63	70	74	63	65	68	63	62	63	60	58	59	57	55	56	55	52	52	50	47	47	46	43	42	42	40	38	39	37	35	36	34	32	34	32	0
				Exposed	62	61	62	58	57	57	55	53	53	52	50	50	50	47	46	47	45	44	45	42	41	42	40	39	39	36	35	36	33	32	33	0	0	30	0	0	29	0	0	27	0	0
		10:12	39.8	Non-Exposed	63	75	75	63	74	75	63	69	73	63	65	68	62	61	63	59	58	59	57	55	55	54	52	52	50	47	47	46	43	42	42	40	38	39	37	35	36	34	32	34	32	0
				Exposed	61	60	62	58	56	57	55	53	53	52	50	49	49	47	46	47	44	43	45	42	41	42	40	39	39	36	35	36	33	31	33	0	0	30	0	0	29	0	0	27	0	0
		11:12	42.5	Non-Exposed	62	74	74	62	73	74	62	69	72	62	65	67	62	61	63	59	58	59	56	55	55	54	52	52	50	47	47	46	43	42	42	40	38	39	37	35	36	34	32	34	32	0
				Exposed	61	60	62	58	56	57	55	53	53	52	50	49	49	47	46	47	44	43	44	42	41	42	40	39	39	36	35	35	33	31	33	0	0	30	0	0	28	0	0	27	0	0
		12:12	45	Non-Exposed	62	74	74	62	73	74	62	69	72	62	65	67	61	61	63	58	58	59	56	55	55	54	52	52	49	47	46	45	43	42	42	40	38	39	37	35	36	34	32	34	32	0
				Exposed	60	60	61	57	56	57	54	53	53	51	50	49	49	47	46	47	44	43	44	42	41	42	40	39	39	36	35	35	33	31	33	0	0	30	0	0	28	0	0	27	0	0

Tamarack 2.3 Rail – Hip Flush-Mount on 30 Foot Maximum Mean Roof Height – Portrait – Panel Length = 96 Inches or Less

Ground Snow Load	Exposure Category	Roof Pitch	Roof Angle	Wind Speed (mph)	95			100			105			110			115			120			125			130			140			150			160			170			180			190		
				Roof Area	1	2	3	1	2	3	1	2	3	1	2	3	1	2	3	1	2	3	1	2	3	1	2	3	1	2	3	1	2	3	1	2	3	1	2	3	1	2	3	1	2	3
5	B	2:12	9.5	Non-Exposed	62	73	73	62	73	73	62	73	73	62	73	73	62	73	73	62	73	73	62	73	73	62	73	71	58	67	64	54	62	59	50	57	54	46	52	50	43	49	46	41	46	43
				Exposed	62	73	73	62	73	73	62	73	72	62	71	67	58	67	64	55	63	60	53	60	57	50	57	54	46	52	49	42	48	45	39	44	42	37	41	39	34	38	36	32	35	34
		3:12	14.0	Non-Exposed	60	71	71	60	71	71	60	71	71	60	71	71	60	71	71	60	71	71	60	71	71	60	71	70	58	67	64	54	61	58	50	56	54	46	52	50	43	49	46	41	45	43
				Exposed	60	71	71	60	71	71	60	71	71	60	70	67	58	66	63	55	63	60	52	60	57	50	57	54	46	52	49	42	47	45	39	44	42	37	41	39	34	38	36	32	35	34
		4:12	18.4	Non-Exposed	61	73	73	61	73	73	61	73	73	61	73	73	61	73	73	61	73	73	61	73	73	61	73	70	58	66	63	53	61	58	50	56	53	46	52	50	43	48	46	41	45	43
				Exposed	61	73	73	61	73	73	61	73	70	61	70	66	57	66	63	55	62	59	52	59	56	50	56	54	46	51	49	42	47	45	39	44	42	37	40	39	34	38	36	32	35	34
		5:12	22.6	Non-Exposed	60	72		60	72		60	72		60	72		60	72		60	72		60	72		60	72		60	72		60	69		60	63		57	58		53	54		50	51	
				Exposed	60	72		60	72		60	72		60	72		60	72		60	70		60	67		60	64		57	58		52	53		48	49		44	45		41	42		38	39	
		6:12	26.6	Non-Exposed	60	73		60	73		60	73		60	73		60	73		60	73		60	73		60	73		60	73		60	68		60	63		57	58		53	54		49	51	
				Exposed	60	73		60	73		60	73		60	73		60	73		60	70		60	66		60	63		57	58		52	53		48	49		44	45		41	42		38	39	
		7:12	30.3	Non-Exposed	60	73	73	60	73	73	60	73	73	60	73	73	60	73	73	60	73	73	60	73	73	60	73	73	60	67	71	60	61	63	58	56	57	54	52	52	50	48	47	47	45	44
				Exposed	60	73	73	60	73	73	60	73	73	60	71	73	60	67	70	60	63	65	60	60	61	59	56	57	54	51	51	49	47	46	45	43	42	42	39	38	39	37	35	36	34	32
		8:12	33.7	Non-Exposed	60	73	73	60	73	73	60	73	73	60	73	73	60	73	73	60	73	73	60	73	73	60	73	73	60	67	70	60	61	63	58	56	56	54	51	51	50	48	47	47	44	43
				Exposed	60	73	73	60	73	73	60	73	73	60	70	73	60	66	69	60	63	65	60	59	61	58	56	57	53	51	51	49	46	46	45	43	41	42	39	38	39	37	35	36	34	32
		9:12	36.9	Non-Exposed	60	74	74	60	74	74	60	74	74	60	74	74	60	74	74	60	74	74	60	74	74	60	73	74	60	66	69	60	61	62	57	56	56	54	51	51	50	48	47	47	44	43
				Exposed	60	74	74	60	74	74	60	74	74	60	70	74	60	66	69	60	62	64	60	59	60	58	56	57	53	51	51	49	46	46	45	43	41	42	39	38	39	37	35	36	34	32
		10:12	39.8	Non-Exposed	60	74	74	60	74	74	60	74	74	60	74	74	60	74	74	60	74	74	60	74	74	60	73	74	60	66	69	60	60	62	57	55	56	53	51	51	50	47	47	47	44	43
				Exposed	60	74	74	60	74	74	60	74	74	60	70	73	60	66	68	60	62	64	60	59	60	57	56	56	53	51	50	49	46	45	45	42	41	42	39	38	39	36	35	36	34	32
		11:12	42.5	Non-Exposed	61	74	74	61	74	74	61	74	74	61	74	74	61	74	74	61	74	74	61	74	74	61	73	74	61	66	69	61	60	62	57	55	56	53	51	51	50	47	47	47	44	43
				Exposed	61	74	74	61	74	74	61	74	74	61	69	73	61	65	68	61	62	64	59	59	60	57	56	56	52	50	50	48	46	45	45	42	41	42	39	38	39	36	35	36	34	32
		12:12	45	Non-Exposed	61	74	74	61	74	74	61	74	74	61	74	74	61	74	74	61	74	74	61	74	74	61	72	74	61	66	68	60	60	61	56	55	56	53	51	51	49	47	47	46	44	43
				Exposed	61	74	74	61	74	74	61	73	74	61	69	72	61	65	68	61	62	63	59	58	59	57	55	56	52	50	50	48	46	45	45	42	41	41	39	38	39	36	35	36	34	32
	C	2:12	9.5	Non-Exposed	62	73	73	62	73	73	62	73	73	62	73	70	61	70	66	57	66	63	55	63	60	52	60	57	48	54	51	44	50	47	41	46	44	38	42	40	36	39	38	34	37	35
				Exposed	60	69	65	56	64	61	53	60	57	50	57	54	48	54	51	45	51	48	43	48	46	41	46	44	38	42	40	35	38	37	33	36	34	30	33	0	29	0	0	27	0	0
		3:12	14.0	Non-Exposed	60	71	71	60	71	71	60	71	71	60	71	70	60	69	66	57	66	62	54	62	59	52	59	56	48	54	51	44	49	47	41	46	43	38	42	40	36	39	37	34	37	35
				Exposed	59	68	65	56	64	61	53	60	57	50	57	54	47	54	51	45	51	48	43	48	46	41	46	44	38	42	40	35	38	37	32	35	34	30	33	0	29	0	0	27	0	0
		4:12	18.4	Non-Exposed	61	73	73	61	73	73	61	73	73	61	73	69	60	69	65	57	65	62	54	62	59	52	59	56	48	54	51	44	49	47	41	45	43	38	42	40	36	39	37	34	37	35
				Exposed	59	68	65	56	64	60	52	60	57	50	56	54	47	53	51	45	51	48	43	48	46	41	46	44	38	42	40	35	38	36	32	35	34	30	33	0	28	0	0	27	0	0
		5:12	22.6	Non-Exposed	60	72		60	72		60	72		60	72		60	72		60	72		60	70		60	66		59	60		54	55		50	51		46	47		43	44		40	41	
				Exposed	60	72		60	72		60	67		60	63		59	60		56	57		53	54		50	51		46	47		42	43		38	40		36	37		33	34		31	32	
		6:12	26.6	Non-Exposed	60	73		60	73		60	73		60	73		60	73		60	73		60	69		60	66		59	60		54	55		50	51		46	47		43	44		40	41	
				Exposed	60	73		60	71		60	67		60	63		59	60		55	56		53	54		50	51		45	47		42	43		38	40		35	37		33	34		31	32	
		7:12	30.3	Non-Exposed	60	73	73	60	73	73	60	73	73	60	73	73	60	70	73	60	66	69	60	62	64	60	59	60	56	53	54	51	49	48	47	45	44	44	41	40	41	38	37	38	36	34
				Exposed	60	69	72	60	64	67	60	60	61	59	56	57	56	53	53	53	50	50	50	47	47	47	45	44	43	41	39	40	37	36	37	34	33	34	32	0	32	0	0	30	0	0
		8:12	33.7	Non-Exposed	60	73	73	60	73	73	60	73	73	60	73	73	60	69	73	60	65	68	60	62	64	60	59	60	56	53	53	51	49	48	47	45	44	44	41	40	41	38	37	38	36	34
				Exposed	60	68	72	60	64	66	60	60	61	58	56	57	55	53	53	52	50	50	50	47	47	47	45	44	43	41	39	40	37	36	37	34	32	34	32	0	32	0	0	30	0	0
		9:12	36.9	Non-Exposed	60	74	74	60	74	74	60	74	74	60	73	74	60	69	73	60	65	68	60	62	64	60	59	60	55	53	53	51	48	48	47	45	44	43	41	40	40	38	37	38	36	34
				Exposed	60	68	71	60	63	66	60	59	61	58	56	56	55	53	53	52	50	49	50	47	46	47	45	44	43	41	39	39	37	36	36	34	32	34	32	0	31	0	0	29	0	0
		10:12	39.8	Non-Exposed	60	74	74	60	74	74	60	74	74	60	73	74	60	69	72	60	65	67	60	61	63	60	58	59	55	53	53	51	48	48	47	44	43	43	41	40	40	38	37	38	36	34
				Exposed	60	68	71	60	63	65	60	59	60	57	56	56	54	52	53	52	50	49	49	47	46	47	45	44	43	41	39	39	37	36	36	34	32	34	32	0	31	0	0	29	0	0
		11:12	42.5	Non-Exposed	61	74	74	61	74	74	61	74	74	61	72	74	61	68	72	61	65	67	61	61	63	59	58	59	54	53	53	50	48	48	47	44	43	43	41	40	40	38	37	38	35	34
				Exposed	61	67	70	61	63	65	60	59	60	57	55	56	54	52	52	52	50	49	49	47	46	47	45	44	43	41	39	39	37	35	36	34	32	34	32	0	31	0	0	29	0	0
		12:12	45	Non-Exposed	61	74	74	61	74	74	61	74	74	61	72	74	61	68	71	61	64	67	61	61	63	59	58	59	54	53	53	50	48	48	47	44	43	43	41	40	40	38	36	38	35	34
				Exposed	61	67	70	61	63	65	59	59	60	57	55	56	54	52	52	51	49	49	49	47	46	47	45	44	43	40	39	39	37	35	36	34	32	34	31	0	31	0	0	29	0	0
	D	2:12	9.5	Non-Exposed	62	73	73	62	73	71	61	71	67	58	66	63	55	63	59	52	59	56	50	56	53	47	53	51	43	49	46	40	45	42	37	41	39	35	38	36	33	36	34	31	33	0
				Exposed	54	62	59	51	58	55	48	54	52	45	51	49	43	48	46	41	46	44	39	44	41	37	41	39	34	38	36	32	35	33	30	32	0	28	0	0	26	0	0	0	0	0
		3:12	14.0	Non-Exposed	60	71	71	60	71	71	60	70	67	57	66	63	54	62	59	52	59	56	49	56	53	47	53	51	43	49	46	40	44	42	37	41	39	35	38	36	32	36	34	31	33	0
				Exposed	54	61	58	51	57	55	48	54	51	45	51	48	43	48	46	41	46	43	39	43	41	37	41	39	34	38	36	32	35	33	30	32	0	28	0	0	0	0	0	0	0	0
		4:12	18.4	Non-Exposed	61	73	73	61	73	70	61	70	66	57	65	62	54	62	59	52	59	56	49	56	53	47	53	50	43	48	46	40	44	42	37	41	39	35	38	36	32	35	34	31	33	0
				Exposed	53	61	58	50	57	54	48	54	51	45	51	48	43	48	46	41	46	43	39	43	41	37	41	39	34	38	36	32	35	33	29	32	0	28	0	0	0	0	0	0	0	0
		5:12	22.6	Non-Exposed	60	72		60	72		60	72		60	72		60	70		60	66		60	63		59	60		53	54		49	50		45	46		41	43		38	40		36	37	
				Exposed	60	69		60	64		59	60		56	57		53	54		50	51		47	49		45	46		41	42		37	39		35	36		32	33		30	0		28	0	
		6:12	26.6	Non-Exposed	60	73		60	73		60	73		60	73		60	69		60	66		60	62		58	59		53	54		48	50		45	46		41	42		38	40		36	37	
				Exposed	60	68		60	64		59	60		56	57		53	54		50	51		47	48		45	46		41	42		37	39		34	36		32	33		30	0		28	0	
		7:12	30.3	Non-Exposed	60	73	73	60	73	73	60	70	73	60	66	69	60	62	64	60	59	60	58	56	56	55	53	53	50	48	47	46	44	42	42	40	39	39	37	35	37	34	33	34	32	30
				Exposed	60	61	63	59	57	58	56	54	54	53	50	50	50	47	47	47	45	44	45	42	41	43	40	39	39	37	35	36	33	32	33	0	0	31	0	0	29	0	0	27	0	0
		8:12	33.7	Non-Exposed	60	73	73	60	73	73	60	70	73	60	66	69	60	62	64	60	58	60	57	55	56	55	53	53	50	48	47	46	43	42	42	40	39	39	37	35	37	34	33	34	32	30
				Exposed	60	61	63	59	57	58	56	53	53	53	50	50	50	47	47	47	45	44	45	42	41	43	40	39	39	36	35	36	33	32	33	0	0	31	0	0	29	0	0	27	0	0
		9:12	36.9	Non-Exposed	60	74	74	60	74	74	60	70	74	60	65	68	60	62	63	60	58	59	57	55	56	55	52	52	50	47	47	46	43	42	42	40	38	39	37	35	36	34	32	34	32	0
				Exposed	60	61	62	58	57	57	55	53	53	52	50	50	50	47	47	47	45	44	45	42	41	42	40	39	39	36	35	36	33	32	33	0	0	30	0	0	29	0	0	27	0	0
		10:12	39.8	Non-Exposed	60	74	74	60	74	74	60	69	73	60	65	68	60	61	63	59	58	59	57	55	55	54	52	52	50	47	47	46	43	42	42	40	38	39	37	35	36	34	32	34	32	0
				Exposed	60	60	62	58	56	57	55	53	53	52	50	49	49	47	46	47	44	43	45	42	41	42	40	39	39	36	35	36	33	31	33	0	0	30	0	0	29	0	0	27	0	0
		11:12	42.5	Non-Exposed	61	74	74	61	73	74	61	69	72	61	65	67	61	61	63	59	58	59	56	55	55	54	52	52	50	47	47	46	43	42	42	40	38	39	37	35	36	34	32	34	32	0
				Exposed	61	60	62	58	56	57	55	53	53	52	50	49	49	47	46	47	44	43	44	42	41	42	40	39	39	36	35	35	33	31	33	0	0	30	0	0	28	0	0	27	0	0
		12:12	45	Non-Exposed	61	74	74	61	73	74	61	69	72	61	65	67	61	61	63	58	58	59	56	55	55	54	52	52	49	47	46	45	43	42	42	40	38	39	37	35	36	34	32	34	32	0
				Exposed	60	60	61	57	56	57	54	53	53	51	50	49	49	47	46	47	44	43	44	42	41	42	40	39	39	36	35	35	33	31	33	0	0	30	0	0	28	0	0	27	0	0

Tamarack 2.3 Rail – Hip Flush-Mount on 30 Foot Maximum Mean Roof Height – Portrait – Panel Length = 96 Inches or Less

Ground Snow Load	Exposure Category	Roof Pitch	Roof Angle	Wind Speed (mph)	95			100			105			110			115			120			125			130			140			150			160			170			180			190		
				Roof Area	1	2	3	1	2	3	1	2	3	1	2	3	1	2	3	1	2	3	1	2	3	1	2	3	1	2	3	1	2	3	1	2	3	1	2	3	1	2	3	1	2	3
10	B	2:12	9.5	Non-Exposed	54	64	64	54	64	64	54	64	64	54	64	64	54	64	64	54	64	64	54	64	64	54	64	64	54	64	64	54	62	59	50	57	54	46	52	50	43	49	46	41	46	43
				Exposed	54	64	64	54	64	64	54	64	64	54	64	64	54	64	64	54	63	60	53	60	57	50	57	54	46	52	49	42	48	45	39	44	42	37	41	39	34	38	36	32	35	34
		3:12	14.0	Non-Exposed	52	62	62	52	62	62	52	62	62	52	62	62	52	62	62	52	62	62	52	62	62	52	62	62	52	62	62	52	61	58	50	56	54	46	52	50	43	49	46	41	45	43
				Exposed	52	62	62	52	62	62	52	62	62	52	62	62	52	62	62	52	62	60	52	60	57	50	57	54	46	52	49	42	47	45	39	44	42	37	41	39	34	38	36	32	35	34
		4:12	18.4	Non-Exposed	53	64	64	53	64	64	53	64	64	53	64	64	53	64	64	53	64	64	53	64	64	53	64	64	53	64	63	53	61	58	50	56	53	46	52	50	43	48	46	41	45	43
				Exposed	53	64	64	53	64	64	53	64	64	53	64	64	53	64	63	53	62	59	52	59	56	50	56	54	46	51	49	42	47	45	39	44	42	37	40	39	34	38	36	32	35	34
		5:12	22.6	Non-Exposed	53	64		53	64		53	64		53	64		53	64		53	64		53	64		53	64		53	64		53	64		53	63		53	58		52	54		50	51	
				Exposed	53	64		53	64		53	64		53	64		53	64		53	64		53	64		53	64		53	58		52	53		48	49		44	45		41	42		38	39	
		6:12	26.6	Non-Exposed	53	65		53	65		53	65		53	65		53	65		53	65		53	65		53	65		53	65		53	65		53	63		53	58		52	54		49	51	
				Exposed	53	65		53	65		53	65		53	65		53	65		53	65		53	65		53	63		53	58		52	53		48	49		44	45		41	42		38	39	
		7:12	30.3	Non-Exposed	53	66	66	53	66	66	53	66	66	53	66	66	53	66	66	53	66	66	53	66	66	53	66	66	53	66	66	53	61	63	53	56	57	53	52	52	50	48	47	47	45	44
				Exposed	53	66	66	53	66	66	53	66	66	53	66	66	53	66	66	53	63	65	53	60	61	53	56	57	53	51	51	49	47	46	45	43	42	42	39	38	39	37	35	36	34	32
		8:12	33.7	Non-Exposed	54	66	66	54	66	66	54	66	66	54	66	66	54	66	66	54	66	66	54	66	66	54	66	66	54	66	66	54	61	63	54	56	56	54	51	51	50	48	47	47	44	43
				Exposed	54	66	66	54	66	66	54	66	66	54	66	66	54	66	66	54	63	65	54	59	61	54	56	57	53	51	51	49	46	46	45	43	41	42	39	38	39	37	35	36	34	32
		9:12	36.9	Non-Exposed	54	67	67	54	67	67	54	67	67	54	67	67	54	67	67	54	67	67	54	67	67	54	67	67	54	66	67	54	61	62	54	56	56	54	51	51	50	48	47	47	44	43
				Exposed	54	67	67	54	67	67	54	67	67	54	67	67	54	66	67	54	62	64	54	59	60	54	56	57	53	51	51	49	46	46	45	43	41	42	39	38	39	37	35	36	34	32
		10:12	39.8	Non-Exposed	55	68	68	55	68	68	55	68	68	55	68	68	55	68	68	55	68	68	55	68	68	55	68	68	55	66	68	55	60	62	55	55	56	53	51	51	50	47	47	47	44	43
				Exposed	55	68	68	55	68	68	55	68	68	55	68	68	55	66	68	55	62	64	55	59	60	55	56	56	53	51	50	49	46	45	45	42	41	42	39	38	39	36	35	36	34	32
		11:12	42.5	Non-Exposed	56	69	69	56	69	69	56	69	69	56	69	69	56	69	69	56	69	69	56	69	69	56	69	69	56	66	69	56	60	62	56	55	56	53	51	51	50	47	47	47	44	43
				Exposed	56	69	69	56	69	69	56	69	69	56	69	69	56	65	68	56	62	64	56	59	60	56	56	56	52	50	50	48	46	45	45	42	41	42	39	38	39	36	35	36	34	32
		12:12	45	Non-Exposed	57	70	70	57	70	70	57	70	70	57	70	70	57	70	70	57	70	70	57	70	70	57	70	70	57	66	68	57	60	61	56	55	56	53	51	51	49	47	47	46	44	43
				Exposed	57	70	70	57	70	70	57	70	70	57	69	70	57	65	68	57	62	63	57	58	59	57	55	56	52	50	50	48	46	45	45	42	41	41	39	38	39	36	35	36	34	32
	C	2:12	9.5	Non-Exposed	54	64	64	54	64	64	54	64	64	54	64	64	54	64	64	54	64	63	54	63	60	52	60	57	48	54	51	44	50	47	41	46	44	38	42	40	36	39	38	34	37	35
				Exposed	54	64	64	54	64	61	53	60	57	50	57	54	48	54	51	45	51	48	43	48	46	41	46	44	38	42	40	35	38	37	33	36	34	30	33	0	29	0	0	27	0	0
		3:12	14.0	Non-Exposed	52	62	62	52	62	62	52	62	62	52	62	62	52	62	62	52	62	62	52	62	59	52	59	56	48	54	51	44	49	47	41	46	43	38	42	40	36	39	37	34	37	35
				Exposed	52	62	62	52	62	61	52	60	57	50	57	54	47	54	51	45	51	48	43	48	46	41	46	44	38	42	40	35	38	37	32	35	34	30	33	0	29	0	0	27	0	0
		4:12	18.4	Non-Exposed	53	64	64	53	64	64	53	64	64	53	64	64	53	64	64	53	64	62	53	62	59	52	59	56	48	54	51	44	49	47	41	45	43	38	42	40	36	39	37	34	37	35
				Exposed	53	64	64	53	64	60	52	60	57	50	56	54	47	53	51	45	51	48	43	48	46	41	46	44	38	42	40	35	38	36	32	35	34	30	33	0	28	0	0	27	0	0
		5:12	22.6	Non-Exposed	53	64		53	64		53	64		53	64		53	64		53	64		53	64		53	64		53	60		52	55		50	51		46	47		43	44		40	41	
				Exposed	53	64		53	64		53	64		53	63		53	60		53	57		53	54		50	51		46	47		42	43		38	40		36	37		33	34		31	32	
		6:12	26.6	Non-Exposed	53	65		53	65		53	65		53	65		53	65		53	65		53	65		53	65		53	60		52	55		50	51		46	47		43	44		40	41	
				Exposed	53	65		53	65		53	65		53	63		53	60		53	56		53	54		50	51		45	47		42	43		38	40		35	37		33	34		31	32	
		7:12	30.3	Non-Exposed	53	66	66	53	66	66	53	66	66	53	66	66	53	66	66	53	66	66	53	62	64	53	59	60	53	53	54	51	49	48	47	45	44	44	41	40	41	38	37	38	36	34
				Exposed	53	66	66	53	64	66	53	60	61	53	56	57	53	53	53	53	50	50	50	47	47	47	45	44	43	41	39	40	37	36	37	34	33	34	32	0	32	0	0	30	0	0
		8:12	33.7	Non-Exposed	54	66	66	54	66	66	54	66	66	54	66	66	54	66	66	54	65	66	54	62	64	54	59	60	54	53	53	51	49	48	47	45	44	44	41	40	41	38	37	38	36	34
				Exposed	54	66	66	54	64	66	54	60	61	54	56	57	54	53	53	52	50	50	50	47	47	47	45	44	43	41	39	40	37	36	37	34	32	34	32	0	32	0	0	30	0	0
		9:12	36.9	Non-Exposed	54	67	67	54	67	67	54	67	67	54	67	67	54	67	67	54	65	67	54	62	64	54	59	60	54	53	53	51	48	48	47	45	44	43	41	40	40	38	37	38	36	34
				Exposed	54	67	67	54	63	66	54	59	61	54	56	56	54	53	53	52	50	49	50	47	46	47	45	44	43	41	39	39	37	36	36	34	32	34	32	0	31	0	0	29	0	0
		10:12	39.8	Non-Exposed	55	68	68	55	68	68	55	68	68	55	68	68	55	68	68	55	65	67	55	61	63	55	58	59	55	53	53	51	48	48	47	44	43	43	41	40	40	38	37	38	36	34
				Exposed	55	68	68	55	63	65	55	59	60	55	56	56	54	52	53	52	50	49	49	47	46	47	45	44	43	41	39	39	37	36	36	34	32	34	32	0	31	0	0	29	0	0
		11:12	42.5	Non-Exposed	56	69	69	56	69	69	56	69	69	56	69	69	56	68	69	56	65	67	56	61	63	56	58	59	54	53	53	50	48	48	47	44	43	43	41	40	40	38	37	38	35	34
				Exposed	56	67	69	56	63	65	56	59	60	56	55	56	54	52	52	52	50	49	49	47	46	47	45	44	43	41	39	39	37	35	36	34	32	34	32	0	31	0	0	29	0	0
		12:12	45	Non-Exposed	57	70	70	57	70	70	57	70	70	57	70	70	57	68	70	57	64	67	57	61	63	57	58	59	54	53	53	50	48	48	47	44	43	43	41	40	40	38	36	38	35	34
				Exposed	57	67	70	57	63	65	57	59	60	57	55	56	54	52	52	51	49	49	49	47	46	47	45	44	43	40	39	39	37	35	36	34	32	34	31	0	31	0	0	29	0	0
	D	2:12	9.5	Non-Exposed	54	64	64	54	64	64	54	64	64	54	64	63	54	63	59	52	59	56	50	56	53	47	53	51	43	49	46	40	45	42	37	41	39	35	38	36	33	36	34	31	33	0
				Exposed	54	62	59	51	58	55	48	54	52	45	51	49	43	48	46	41	46	44	39	44	41	37	41	39	34	38	36	32	35	33	30	32	0	28	0	0	26	0	0	0	0	0
		3:12	14.0	Non-Exposed	52	62	62	52	62	62	52	62	62	52	62	62	52	62	59	52	59	56	49	56	53	47	53	51	43	49	46	40	44	42	37	41	39	35	38	36	32	36	34	31	33	0
				Exposed	52	61	58	51	57	55	48	54	51	45	51	48	43	48	46	41	46	43	39	43	41	37	41	39	34	38	36	32	35	33	30	32	0	28	0	0	0	0	0	0	0	0
		4:12	18.4	Non-Exposed	53	64	64	53	64	64	53	64	64	53	64	62	53	62	59	52	59	56	49	56	53	47	53	50	43	48	46	40	44	42	37	41	39	35	38	36	32	35	34	31	33	0
				Exposed	53	61	58	50	57	54	48	54	51	45	51	48	43	48	46	41	46	43	39	43	41	37	41	39	34	38	36	32	35	33	29	32	0	28	0	0	0	0	0	0	0	0
		5:12	22.6	Non-Exposed	53	64		53	64		53	64		53	64		53	64		53	64		53	63		53	60		52	54		49	50		45	46		41	43		38	40		36	37	
				Exposed	53	64		53	64		53	60		53	57		53	54		50	51		47	49		45	46		41	42		37	39		35	36		32	33		30	0		28	0	
		6:12	26.6	Non-Exposed	53	65		53	65		53	65		53	65		53	65		53	65		53	62		53	59		52	54		48	50		45	46		41	42		38	40		36	37	
				Exposed	53	65		53	64		53	60		53	57		53	54		50	51		47	48		45	46		41	42		37	39		34	36		32	33		30	0		28	0	
		7:12	30.3	Non-Exposed	53	66	66	53	66	66	53	66	66	53	66	66	53	62	64	53	59	60	53	56	56	53	53	53	50	48	47	46	44	42	42	40	39	39	37	35	37	34	33	34	32	30
				Exposed	53	61	63	53	57	58	53	54	54	53	50	50	50	47	47	47	45	44	45	42	41	43	40	39	39	37	35	36	33	32	33	0	0	31	0	0	29	0	0	27	0	0
		8:12	33.7	Non-Exposed	54	66	66	54	66	66	54	66	66	54	66	66	54	62	64	54	58	60	54	55	56	54	53	53	50	48	47	46	43	42	42	40	39	39	37	35	37	34	33	34	32	30
				Exposed	54	61	63	54	57	58	54	53	53	53	50	50	50	47	47	47	45	44	45	42	41	43	40	39	39	36	35	36	33	32	33	0	0	31	0	0	29	0	0	27	0	0
		9:12	36.9	Non-Exposed	54	67	67	54	67	67	54	67	67	54	65	67	54	62	63	54	58	59	54	55	56	54	52	52	50	47	47	46	43	42	42	40	38	39	37	35	36	34	32	34	32	0
				Exposed	54	61	62	54	57	57	54	53	53	52	50	50	50	47	46	47	45	44	45	42	41	42	40	39	39	36	35	36	33	32	33	0	0	30	0	0	29	0	0	27	0	0
		10:12	39.8	Non-Exposed	55	68	68	55	68	68	55	68	68	55	65	68	55	61	63	55	58	59	55	55	55	54	52	52	50	47	47	46	43	42	42	40	38	39	37	35	36	34	32	34	32	0
				Exposed	55	60	62	55	56	57	55	53	53	52	50	49	49	47	46	47	44	43	45	42	41	42	40	39	39	36	35	36	33	31	33	0	0	30	0	0	29	0	0	27	0	0
		11:12	42.5	Non-Exposed	56	69	69	56	69	69	56	69	69	56	65	67	56	61	63	56	58	59	56	55	55	54	52	52	50	47	47	46	43	42	42	40	38	39	37	35	36	34	32	34	32	0
				Exposed	56	60	62	56	56	57	55	53	53	52	50	49	49	47	46	47	44	43	44	42	41	42	40	39	39	36	35	35	33	31	33	0	0	30	0	0	28	0	0	27	0	0
		12:12	45	Non-Exposed	57	70	70	57	70	70	57	69	70	57	65	67	57	61	63	57	58	59	56	55	55	54	52	52	49	47	46	45	43	42	42	40	38	39	37	35	36	34	32	34	32	0
				Exposed	57	60	61	57	56	57	54	53	53	51	50	49	49	47	46	47	44	43	44	42	41	42	40	39	39	36	35	35	33	31	33	0	0	30	0	0	28	0	0	27	0	0

Tamarack 2.3 Rail – Hip Flush-Mount on 30 Foot Maximum Mean Roof Height – Portrait – Panel Length = 96 Inches or Less

Ground Snow Load	Exposure Category	Roof Pitch	Roof Angle	Wind Speed (mph)	95			100			105			110			115			120			125			130			140			150			160			170			180			190		
				Roof Area	1	2	3	1	2	3	1	2	3	1	2	3	1	2	3	1	2	3	1	2	3	1	2	3	1	2	3	1	2	3	1	2	3	1	2	3	1	2	3	1	2	3
15	B	2:12	9.5	Non-Exposed	48	57	57	48	57	57	48	57	57	48	57	57	48	57	57	48	57	57	48	57	57	48	57	57	48	57	57	48	57	57	48	57	54	46	52	50	43	49	46	41	46	43
				Exposed	48	57	57	48	57	57	48	57	57	48	57	57	48	57	57	48	57	57	48	57	57	48	57	54	46	52	49	42	48	45	39	44	42	37	41	39	34	38	36	32	35	34
		3:12	14.0	Non-Exposed	46	55	55	46	55	55	46	55	55	46	55	55	46	55	55	46	55	55	46	55	55	46	55	55	46	55	55	46	55	55	46	55	54	46	52	50	43	49	46	41	45	43
				Exposed	46	55	55	46	55	55	46	55	55	46	55	55	46	55	55	46	55	55	46	55	55	46	55	54	46	52	49	42	47	45	39	44	42	37	41	39	34	38	36	32	35	34
		4:12	18.4	Non-Exposed	48	58	58	48	58	58	48	58	58	48	58	58	48	58	58	48	58	58	48	58	58	48	58	58	48	58	58	48	58	58	48	56	53	46	52	50	43	48	46	41	45	43
				Exposed	48	58	58	48	58	58	48	58	58	48	58	58	48	58	58	48	58	58	48	58	56	48	56	54	46	51	49	42	47	45	39	44	42	37	40	39	34	38	36	32	35	34
		5:12	22.6	Non-Exposed	48	58		48	58		48	58		48	58		48	58		48	58		48	58		48	58		48	58		48	58		48	58		48	58		47	54		46	51	
				Exposed	48	58		48	58		48	58		48	58		48	58		48	58		48	58		48	58		48	58		48	53		48	49		44	45		41	42		38	39	
		6:12	26.6	Non-Exposed	48	59		48	59		48	59		48	59		48	59		48	59		48	59		48	59		48	59		48	59		48	59		48	58		47	54		46	51	
				Exposed	48	59		48	59		48	59		48	59		48	59		48	59		48	59		48	59		48	58		48	53		48	49		44	45		41	42		38	39	
		7:12	30.3	Non-Exposed	48	60	60	48	60	60	48	60	60	48	60	60	48	60	60	48	60	60	48	60	60	48	60	60	48	60	60	48	60	60	48	56	57	48	52	52	48	48	47	47	45	44
				Exposed	48	60	60	48	60	60	48	60	60	48	60	60	48	60	60	48	60	60	48	60	60	48	56	57	48	51	51	48	47	46	45	43	42	42	39	38	39	37	35	36	34	32
		8:12	33.7	Non-Exposed	49	61	61	49	61	61	49	61	61	49	61	61	49	61	61	49	61	61	49	61	61	49	61	61	49	61	61	49	61	61	49	56	56	49	51	51	48	48	47	47	44	43
				Exposed	49	61	61	49	61	61	49	61	61	49	61	61	49	61	61	49	61	61	49	59	61	49	56	57	49	51	51	49	46	46	45	43	41	42	39	38	39	37	35	36	34	32
		9:12	36.9	Non-Exposed	50	62	62	50	62	62	50	62	62	50	62	62	50	62	62	50	62	62	50	62	62	50	62	62	50	62	62	50	61	62	50	56	56	50	51	51	49	48	47	47	44	43
				Exposed	50	62	62	50	62	62	50	62	62	50	62	62	50	62	62	50	62	62	50	59	60	50	56	57	50	51	51	49	46	46	45	43	41	42	39	38	39	37	35	36	34	32
		10:12	39.8	Non-Exposed	51	64	64	51	64	64	51	64	64	51	64	64	51	64	64	51	64	64	51	64	64	51	64	64	51	64	64	51	60	62	51	55	56	51	51	51	50	47	47	47	44	43
				Exposed	51	64	64	51	64	64	51	64	64	51	64	64	51	64	64	51	62	64	51	59	60	51	56	56	51	51	50	49	46	45	45	42	41	42	39	38	39	36	35	36	34	32
		11:12	42.5	Non-Exposed	52	65	65	52	65	65	52	65	65	52	65	65	52	65	65	52	65	65	52	65	65	52	65	65	52	65	65	52	60	62	52	55	56	52	51	51	50	47	47	47	44	43
				Exposed	52	65	65	52	65	65	52	65	65	52	65	65	52	65	65	52	62	64	52	59	60	52	56	56	52	50	50	48	46	45	45	42	41	42	39	38	39	36	35	36	34	32
		12:12	45	Non-Exposed	53	66	66	53	66	66	53	66	66	53	66	66	53	66	66	53	66	66	53	66	66	53	66	66	53	66	66	53	60	61	53	55	56	53	51	51	49	47	47	46	44	43
				Exposed	53	66	66	53	66	66	53	66	66	53	66	66	53	65	66	53	62	63	53	58	59	53	55	56	52	50	50	48	46	45	45	42	41	41	39	38	39	36	35	36	34	32
	C	2:12	9.5	Non-Exposed	48	57	57	48	57	57	48	57	57	48	57	57	48	57	57	48	57	57	48	57	57	48	57	57	48	54	51	44	50	47	41	46	44	38	42	40	36	39	38	34	37	35
				Exposed	48	57	57	48	57	57	48	57	57	48	57	54	48	54	51	45	51	48	43	48	46	41	46	44	38	42	40	35	38	37	33	36	34	30	33	0	29	0	0	27	0	0
		3:12	14.0	Non-Exposed	46	55	55	46	55	55	46	55	55	46	55	55	46	55	55	46	55	55	46	55	55	46	55	55	46	54	51	44	49	47	41	46	43	38	42	40	36	39	37	34	37	35
				Exposed	46	55	55	46	55	55	46	55	55	46	55	54	46	54	51	45	51	48	43	48	46	41	46	44	38	42	40	35	38	37	32	35	34	30	33	0	29	0	0	27	0	0
		4:12	18.4	Non-Exposed	48	58	58	48	58	58	48	58	58	48	58	58	48	58	58	48	58	58	48	58	58	48	58	56	48	54	51	44	49	47	41	45	43	38	42	40	36	39	37	34	37	35
				Exposed	48	58	58	48	58	58	48	58	57	48	56	54	47	53	51	45	51	48	43	48	46	41	46	44	38	42	40	35	38	36	32	35	34	30	33	0	28	0	0	27	0	0
		5:12	22.6	Non-Exposed	48	58		48	58		48	58		48	58		48	58		48	58		48	58		48	58		48	58		47	55		46	51		45	47		43	44		40	41	
				Exposed	48	58		48	58		48	58		48	58		48	58		48	57		48	54		48	51		46	47		42	43		38	40		36	37		33	34		31	32	
		6:12	26.6	Non-Exposed	48	59		48	59		48	59		48	59		48	59		48	59		48	59		48	59		48	59		47	55		46	51		45	47		43	44		40	41	
				Exposed	48	59		48	59		48	59		48	59		48	59		48	56		48	54		48	51		45	47		42	43		38	40		35	37		33	34		31	32	
15		7:12	30.3	Non-Exposed	48	60	60	48	60	60	48	60	60	48	60	60	48	60	60	48	60	60	48	60	60	48	59	60	48	53	54	48	49	48	47	45	44	44	41	40	41	38	37	38	36	34
				Exposed	48	60	60	48	60	60	48	60	60	48	56	57	48	53	53	48	50	50	48	47	47	47	45	44	43	41	39	40	37	36	37	34	33	34	32	0	32	0	0	30	0	0
		8:12	33.7	Non-Exposed	49	61	61	49	61	61	49	61	61	49	61	61	49	61	61	49	61	61	49	61	61	49	59	60	49	53	53	49	49	48	47	45	44	44	41	40	41	38	37	38	36	34
				Exposed	49	61	61	49	61	61	49	60	61	49	56	57	49	53	53	49	50	50	49	47	47	47	45	44	43	41	39	40	37	36	37	34	32	34	32	0	32	0	0	30	0	0
		9:12	36.9	Non-Exposed	50	62	62	50	62	62	50	62	62	50	62	62	50	62	62	50	62	62	50	62	62	50	59	60	50	53	53	49	48	48	47	45	44	43	41	40	40	38	37	38	36	34
				Exposed	50	62	62	50	62	62	50	59	61	50	56	56	50	53	53	50	50	49	50	47	46	47	45	44	43	41	39	39	37	36	36	34	32	34	32	0	31	0	0	29	0	0
		10:12	39.8	Non-Exposed	51	64	64	51	64	64	51	64	64	51	64	64	51	64	64	51	64	64	51	61	63	51	58	59	51	53	53	50	48	48	47	44	43	43	41	40	40	38	37	38	36	34
				Exposed	51	64	64	51	63	64	51	59	60	51	56	56	51	52	53	51	50	49	49	47	46	47	45	44	43	41	39	39	37	36	36	34	32	34	32	0	31	0	0	29	0	0
		11:12	42.5	Non-Exposed	52	65	65	52	65	65	52	65	65	52	65	65	52	65	65	52	65	65	52	61	63	52	58	59	52	53	53	50	48	48	47	44	43	43	41	40	40	38	37	38	35	34
				Exposed	52	65	65	52	63	65	52	59	60	52	55	56	52	52	52	52	50	49	49	47	46	47	45	44	43	41	39	39	37	35	36	34	32	34	32	0	31	0	0	29	0	0
		12:12	45	Non-Exposed	53	66	66	53	66	66	53	66	66	53	66	66	53	66	66	53	64	66	53	61	63	53	58	59	53	53	53	50	48	48	47	44	43	43	41	40	40	38	36	38	35	34
				Exposed	53	66	66	53	63	65	53	59	60	53	55	56	53	52	52	51	49	49	49	47	46	47	45	44	43	40	39	39	37	35	36	34	32	34	31	0	31	0	0	29	0	0
	D	2:12	9.5	Non-Exposed	48	57	57	48	57	57	48	57	57	48	57	57	48	57	57	48	57	56	48	56	53	47	53	51	43	49	46	40	45	42	37	41	39	35	38	36	33	36	34	31	33	0
				Exposed	48	57	57	48	57	55	48	54	52	45	51	49	43	48	46	41	46	44	39	44	41	37	41	39	34	38	36	32	35	33	30	32	0	28	0	0	26	0	0	0	0	0
		3:12	14.0	Non-Exposed	46	55	55	46	55	55	46	55	55	46	55	55	46	55	55	46	55	55	46	55	53	46	53	51	43	49	46	40	44	42	37	41	39	35	38	36	32	36	34	31	33	0
				Exposed	46	55	55	46	55	55	46	54	51	45	51	48	43	48	46	41	46	43	39	43	41	37	41	39	34	38	36	32	35	33	30	32	0	28	0	0	0	0	0	0	0	0
		4:12	18.4	Non-Exposed	48	58	58	48	58	58	48	58	58	48	58	58	48	58	58	48	58	56	48	56	53	47	53	50	43	48	46	40	44	42	37	41	39	35	38	36	32	35	34	31	33	0
				Exposed	48	58	58	48	57	54	48	54	51	45	51	48	43	48	46	41	46	43	39	43	41	37	41	39	34	38	36	32	35	33	29	32	0	28	0	0	0	0	0	0	0	0
		5:12	22.6	Non-Exposed	48	58		48	58		48	58		48	58		48	58		48	58		48	58		48	58		47	54		46	50		45	46		41	43		38	40		36	37	
				Exposed	48	58		48	58		48	58		48	57		48	54		48	51		47	49		45	46		41	42		37	39		35	36		32	33		30	0		28	0	
		6:12	26.6	Non-Exposed	48	59		48	59		48	59		48	59		48	59		48	59		48	59		48	59		47	54		46	50		45	46		41	42		38	40		36	37	
				Exposed	48	59		48	59		48	59		48	57		48	54		48	51		47	48		45	46		41	42		37	39		34	36		32	33		30	0		28	0	
		7:12	30.3	Non-Exposed	48	60	60	48	60	60	48	60	60	48	60	60	48	60	60	48	59	60	48	56	56	48	53	53	48	48	47	46	44	42	42	40	39	39	37	35	37	34	33	34	32	30
				Exposed	48	60	60	48	57	58	48	54	54	48	50	50	48	47	47	47	45	44	45	42	41	43	40	39	39	37	35	36	33	32	33	0	0	31	0	0	29	0	0	27	0	0
		8:12	33.7	Non-Exposed	49	61	61	49	61	61	49	61	61	49	61	61	49	61	61	49	58	60	49	55	56	49	53	53	48	48	47	46	43	42	42	40	39	39	37	35	37	34	33	34	32	30
				Exposed	49	61	61	49	57	58	49	53	53	49	50	50	49	47	47	47	45	44	45	42	41	43	40	39	39	36	35	36	33	32	33	0	0	31	0	0	29	0	0	27	0	0
		9:12	36.9	Non-Exposed	50	62	62	50	62	62	50	62	62	50	62	62	50	62	62	50	58	59	50	55	56	50	52	52	49	47	47	46	43	42	42	40	38	39	37	35	36	34	32	34	32	0
				Exposed	50	61	62	50	57	57	50	53	53	50	50	50	50	47	46	47	45	44	45	42	41	42	40	39	39	36	35	36	33	32	33	0	0	30	0	0	29	0	0	27	0	0
		10:12	39.8	Non-Exposed	51	64	64	51	64	64	51	64	64	51	64	64	51	61	63	51	58	59	51	55	55	51	52	52	50	47	47	46	43	42	42	40	38	39	37	35	36	34	32	34	32	0
				Exposed	51	60	62	51	56	57	51	53	53	51	50	49	49	47	46	47	44	43	45	42	41	42	40	39	39	36	35	36	33	31	33	0	0	30	0	0	29	0	0	27	0	0
		11:12	42.5	Non-Exposed	52	65	65	52	65	65	52	65	65	52	65	65	52	61	63	52	58	59	52	55	55	52	52	52	50	47	47	46	43	42	42	40	38	39	37	35	36	34	32	34	32	0
				Exposed	52	60	62	52	56	57	52	53	53	52	50	49	49	47	46	47	44	43	44	42	41	42	40	39	39	36	35	35	33	31	33	0	0	30	0	0	28	0	0	27	0	0
		12:12	45	Non-Exposed	53	66	66	53	66	66	53	66	66	53	65	66	53	61	63	53	58	59	53	55	55	53	52	52	49	47	46	45	43	42	42	40	38	39	37	35	36	34	32	34	32	0
				Exposed	53	60	61	53	56	57	53	53	53	51	50	49	49	47	46	47	44	43	44	42	41	42	40	39	39	36	35	35	33	31	33	0	0	30	0	0	28	0	0	27	0	0

Tamarack 2.3 Rail – Hip Flush-Mount on 30 Foot Maximum Mean Roof Height – Portrait – Panel Length = 96 Inches or Less

Ground Snow Load	Exposure Category	Roof Pitch	Roof Angle	Wind Speed (mph)	95			100			105			110			115			120			125			130			140			150			160			170			180			190		
				Roof Area	1	2	3	1	2	3	1	2	3	1	2	3	1	2	3	1	2	3	1	2	3	1	2	3	1	2	3	1	2	3	1	2	3	1	2	3	1	2	3	1	2	3
20	B	2:12	9.5	Non-Exposed	43	52	52	43	52	52	43	52	52	43	52	52	43	52	52	43	52	52	43	52	52	43	52	52	43	52	52	43	52	52	43	52	52	43	52	50	43	49	46	41	46	43
				Exposed	43	52	52	43	52	52	43	52	52	43	52	52	43	52	52	43	52	52	43	52	52	43	52	52	43	52	49	42	48	45	39	44	42	37	41	39	34	38	36	32	35	34
		3:12	14.0	Non-Exposed	41	50	50	41	50	50	41	50	50	41	50	50	41	50	50	41	50	50	41	50	50	41	50	50	41	50	50	41	50	50	41	50	50	41	50	50	41	49	46	40	45	43
				Exposed	41	50	50	41	50	50	41	50	50	41	50	50	41	50	50	41	50	50	41	50	50	41	50	50	41	50	49	41	47	45	39	44	42	37	41	39	34	38	36	32	35	34
		4:12	18.4	Non-Exposed	43	53	53	43	53	53	43	53	53	43	53	53	43	53	53	43	53	53	43	53	53	43	53	53	43	53	53	43	53	53	43	53	53	43	52	50	43	48	46	41	45	43
				Exposed	43	53	53	43	53	53	43	53	53	43	53	53	43	53	53	43	53	53	43	53	53	43	53	53	43	51	49	42	47	45	39	44	42	37	40	39	34	38	36	32	35	34
		5:12	22.6	Non-Exposed	43	54		43	54		43	54		43	54		43	54		43	54		43	54		43	54		43	54		43	54		43	54		43	54		43	53		42	51	
				Exposed	43	54		43	54		43	54		43	54		43	54		43	54		43	54		43	54		43	54		43	53		43	49		43	45		41	42		38	39	
		6:12	26.6	Non-Exposed	44	55		44	55		44	55		44	55		44	55		44	55		44	55		44	55		44	55		44	55		44	55		44	55		43	54		42	51	
				Exposed	44	55		44	55		44	55		44	55		44	55		44	55		44	55		44	55		44	55		44	53		44	49		44	45		41	42		38	39	
		7:12	30.3	Non-Exposed	45	56	56	45	56	56	45	56	56	45	56	56	45	56	56	45	56	56	45	56	56	45	56	56	45	56	56	45	56	56	45	56	56	44	52	52	44	48	47	43	45	44
				Exposed	45	56	56	45	56	56	45	56	56	45	56	56	45	56	56	45	56	56	45	56	56	45	56	56	45	51	51	45	47	46	45	43	42	42	39	38	39	37	35	36	34	32
		8:12	33.7	Non-Exposed	46	57	57	46	57	57	46	57	57	46	57	57	46	57	57	46	57	57	46	57	57	46	57	57	46	57	57	46	57	57	46	56	56	45	51	51	45	48	47	44	44	43
				Exposed	46	57	57	46	57	57	46	57	57	46	57	57	46	57	57	46	57	57	46	57	57	46	56	57	46	51	51	46	46	46	45	43	41	42	39	38	39	37	35	36	34	32
		9:12	36.9	Non-Exposed	47	58	58	47	58	58	47	58	58	47	58	58	47	58	58	47	58	58	47	58	58	47	58	58	47	58	58	47	58	58	47	56	56	46	51	51	46	48	47	45	44	43
				Exposed	47	58	58	47	58	58	47	58	58	47	58	58	47	58	58	47	58	58	47	58	58	47	56	57	47	51	51	47	46	46	45	43	41	42	39	38	39	37	35	36	34	32
		10:12	39.8	Non-Exposed	48	60	60	48	60	60	48	60	60	48	60	60	48	60	60	48	60	60	48	60	60	48	60	60	48	60	60	48	60	60	48	55	56	47	51	51	47	47	47	46	44	43
				Exposed	48	60	60	48	60	60	48	60	60	48	60	60	48	60	60	48	60	60	48	59	60	48	56	56	48	51	50	48	46	45	45	42	41	42	39	38	39	36	35	36	34	32
		11:12	42.5	Non-Exposed	49	61	61	49	61	61	49	61	61	49	61	61	49	61	61	49	61	61	49	61	61	49	61	61	49	61	61	49	60	61	49	55	56	49	51	51	48	47	47	47	44	43
				Exposed	49	61	61	49	61	61	49	61	61	49	61	61	49	61	61	49	61	61	49	59	60	49	56	56	49	50	50	48	46	45	45	42	41	42	39	38	39	36	35	36	34	32
		12:12	45	Non-Exposed	50	63	63	50	63	63	50	63	63	50	63	63	50	63	63	50	63	63	50	63	63	50	63	63	50	63	63	50	60	61	50	55	56	50	51	51	49	47	47	46	44	43
				Exposed	50	63	63	50	63	63	50	63	63	50	63	63	50	63	63	50	62	63	50	58	59	50	55	56	50	50	50	48	46	45	45	42	41	41	39	38	39	36	35	36	34	32
	C	2:12	9.5	Non-Exposed	43	52	52	43	52	52	43	52	52	43	52	52	43	52	52	43	52	52	43	52	52	43	52	52	43	52	51	43	50	47	41	46	44	38	42	40	36	39	38	34	37	35
				Exposed	43	52	52	43	52	52	43	52	52	43	52	52	43	52	51	43	51	48	43	48	46	41	46	44	38	42	40	35	38	37	33	36	34	30	33	0	29	0	0	27	0	0
		3:12	14.0	Non-Exposed	41	50	50	41	50	50	41	50	50	41	50	50	41	50	50	41	50	50	41	50	50	41	50	50	41	50	50	41	49	47	40	46	43	38	42	40	36	39	37	34	37	35
				Exposed	41	50	50	41	50	50	41	50	50	41	50	50	41	50	50	41	50	48	41	48	46	41	46	44	38	42	40	35	38	37	32	35	34	30	33	0	29	0	0	27	0	0
		4:12	18.4	Non-Exposed	43	53	53	43	53	53	43	53	53	43	53	53	43	53	53	43	53	53	43	53	53	43	53	53	43	53	51	43	49	47	41	45	43	38	42	40	36	39	37	34	37	35
				Exposed	43	53	53	43	53	53	43	53	53	43	53	53	43	53	51	43	51	48	43	48	46	41	46	44	38	42	40	35	38	36	32	35	34	30	33	0	28	0	0	27	0	0
		5:12	22.6	Non-Exposed	43	54		43	54		43	54		43	54		43	54		43	54		43	54		43	54		43	54		43	53		42	51		41	47		41	44		40	41	
				Exposed	43	54		43	54		43	54		43	54		43	54		43	54		43	54		43	51		43	47		42	43		38	40		36	37		33	34		31	32	
		6:12	26.6	Non-Exposed	44	55		44	55		44	55		44	55		44	55		44	55		44	55		44	55		44	55		43	54		43	51		42	47		41	44		40	41	
				Exposed	44	55		44	55		44	55		44	55		44	55		44	55		44	54		44	51		44	47		42	43		38	40		35	37		33	34		31	32	
		7:12	30.3	Non-Exposed	45	56	56	45	56	56	45	56	56	45	56	56	45	56	56	45	56	56	45	56	56	45	56	56	45	53	54	44	49	48	43	45	44	42	41	40	41	38	37	38	36	34
				Exposed	45	56	56	45	56	56	45	56	56	45	56	56	45	53	53	45	50	50	45	47	47	45	45	44	43	41	39	40	37	36	37	34	33	34	32	0	32	0	0	30	0	0
		8:12	33.7	Non-Exposed	46	57	57	46	57	57	46	57	57	46	57	57	46	57	57	46	57	57	46	57	57	46	57	57	46	53	53	45	49	48	44	45	44	43	41	40	41	38	37	38	36	34
				Exposed	46	57	57	46	57	57	46	57	57	46	56	57	46	53	53	46	50	50	46	47	47	46	45	44	43	41	39	40	37	36	37	34	32	34	32	0	32	0	0	30	0	0
		9:12	36.9	Non-Exposed	47	58	58	47	58	58	47	58	58	47	58	58	47	58	58	47	58	58	47	58	58	47	58	58	47	53	53	46	48	48	45	45	44	43	41	40	40	38	37	38	36	34
				Exposed	47	58	58	47	58	58	47	56	56	47	53	53	47	50	49	47	47	46	47	45	44	43	41	39	39	37	36	36	34	32	34	32	0	31	0	0	29	0	0			
		10:12	39.8	Non-Exposed	48	60	60	48	60	60	48	60	60	48	60	60	48	60	60	48	60	60	48	60	60	48	58	59	48	53	53	47	48	48	46	44	43	43	41	40	40	38	37	38	36	34
				Exposed	48	60	60	48	60	60	48	59	60	48	56	56	48	52	53	48	50	49	48	47	46	47	45	44	43	41	39	39	37	36	36	34	32	34	32	0	31	0	0	29	0	0
		11:12	42.5	Non-Exposed	49	61	61	49	61	61	49	61	61	49	61	61	49	61	61	49	61	61	49	61	61	49	58	59	49	53	53	48	48	48	47	44	43	43	41	40	40	38	37	38	35	34
				Exposed	49	61	61	49	61	61	49	59	60	49	55	56	49	52	52	49	50	49	49	47	46	47	45	44	43	41	39	39	37	35	36	34	32	34	32	0	31	0	0	29	0	0
		12:12	45	Non-Exposed	50	63	63	50	63	63	50	63	63	50	63	63	50	63	63	50	63	63	50	61	63	50	58	59	50	53	53	49	48	48	47	44	43	43	41	40	40	38	36	38	35	34
				Exposed	50	63	63	50	63	63	50	59	60	50	55	56	50	52	52	50	49	49	49	47	46	47	45	44	43	40	39	39	37	35	36	34	32	34	31	0	31	0	0	29	0	0
	D	2:12	9.5	Non-Exposed	43	52	52	43	52	52	43	52	52	43	52	52	43	52	52	43	52	52	43	52	52	43	52	51	43	49	46	40	45	42	37	41	39	35	38	36	33	36	34	31	33	0
				Exposed	43	52	52	43	52	52	43	52	52	43	51	49	43	48	46	41	46	44	39	44	41	37	41	39	34	38	36	32	35	33	30	32	0	28	0	0	26	0	0	0	0	0
		3:12	14.0	Non-Exposed	41	50	50	41	50	50	41	50	50	41	50	50	41	50	50	41	50	50	41	50	50	41	50	50	41	49	46	40	44	42	37	41	39	35	38	36	32	36	34	31	33	0
				Exposed	41	50	50	41	50	50	41	50	50	41	50	48	41	48	46	41	46	43	39	43	41	37	41	39	34	38	36	32	35	33	30	32	0	28	0	0	0	0	0	0	0	0
		4:12	18.4	Non-Exposed	43	53	53	43	53	53	43	53	53	43	53	53	43	53	53	43	53	53	43	53	53	43	53	50	43	48	46	40	44	42	37	41	39	35	38	36	32	35	34	31	33	0
				Exposed	43	53	53	43	53	53	43	53	51	43	51	48	43	48	46	41	46	43	39	43	41	37	41	39	34	38	36	32	35	33	29	32	0	28	0	0	0	0	0	0	0	0
		5:12	22.6	Non-Exposed	43	54		43	54		43	54		43	54		43	54		43	54		43	54		43	54		43	53		42	50		41	46		40	43		38	40		36	37	
				Exposed	43	54		43	54		43	54		43	54		43	54		43	51		43	49		43	46		41	42		37	39		35	36		32	33		30	0		28	0	
		6:12	26.6	Non-Exposed	44	55		44	55		44	55		44	55		44	55		44	55		44	55		44	55		43	54		42	50		41	46		41	42		38	40		36	37	
				Exposed	44	55		44	55		44	55		44	55		44	54		44	51		44	48		44	46		41	42		37	39		34	36		32	33		30	0		28	0	
		7:12	30.3	Non-Exposed	45	56	56	45	56	56	45	56	56	45	56	56	45	56	56	45	56	56	45	56	56	45	53	53	44	48	47	43	44	42	42	40	39	39	37	35	37	34	33	34	32	30
				Exposed	45	56	56	45	56	56	45	54	54	45	50	50	45	47	47	45	45	44	45	42	41	43	40	39	39	37	35	36	33	32	33	0	0	31	0	0	29	0	0	27	0	0
		8:12	33.7	Non-Exposed	46	57	57	46	57	57	46	57	57	46	57	57	46	57	57	46	57	57	46	55	56	46	53	53	45	48	47	44	43	42	42	40	39	39	37	35	37	34	33	34	32	30
				Exposed	46	57	57	46	57	57	46	53	53	46	50	50	46	47	47	46	45	44	45	42	41	43	40	39	39	36	35	36	33	32	33	0	0	31	0	0	29	0	0	27	0	0
		9:12	36.9	Non-Exposed	47	58	58	47	58	58	47	58	58	47	58	58	47	58	58	47	58	58	47	55	56	47	52	52	46	47	47	45	43	42	42	40	38	39	37	35	36	34	32	34	32	0
				Exposed	47	58	58	47	57	57	47	53	53	47	50	50	47	47	46	47	45	44	45	42	41	42	40	39	39	36	35	36	33	32	33	0	0	30	0	0	29	0	0	27	0	0
		10:12	39.8	Non-Exposed	48	60	60	48	60	60	48	60	60	48	60	60	48	60	60	48	60	60	48	55	55	48	52	52	47	47	47	46	43	42	42	40	38	39	37	35	36	34	32	34	32	0
				Exposed	48	60	60	48	56	57	48	53	53	48	50	49	48	47	46	47	44	43	45	42	41	42	40	39	39	36	35	36	33	31	33	0	0	30	0	0	29	0	0	27	0	0
		11:12	42.5	Non-Exposed	49	61	61	49	61	61	49	61	61	49	61	61	49	61	61	49	58	59	49	55	55	49	52	52	48	47	47	46	43	42	42	40	38	39	37	35	36	34	32	34	32	0
				Exposed	49	60	61	49	56	57	49	53	53	49	50	49	49	47	46	47	44	43	44	42	41	42	40	39	39	36	35	35	33	31	33	0	0	30	0	0	28	0	0	27	0	0
		12:12	45	Non-Exposed	50	63	63	50	63	63	50	63	63	50	63	63	50	61	63	50	58	59	50	55	55	50	52	52	49	47	46	45	43	42	42	40	38	39	37	35	36	34	32	34	32	0
				Exposed	50	60	61	50	56	57	50	53	53	50	50	49	49	47	46	47	44	43	44	42	41	42	40	39	39	36	35	35	33	31	33	0	0	30	0	0	28	0	0	27	0	0

Tamarack 2.3 Rail – Hip Flush-Mount on 30 Foot Maximum Mean Roof Height – Portrait – Panel Length = 96 Inches or Less

Ground Snow Load	Exposure Category	Roof Pitch	Roof Angle	Wind Speed (mph)	95			100			105			110			115			120			125			130			140			150			160			170			180			190		
				Roof Area	1	2	3	1	2	3	1	2	3	1	2	3	1	2	3	1	2	3	1	2	3	1	2	3	1	2	3	1	2	3	1	2	3	1	2	3	1	2	3	1	2	3
25	B	2:12	9.5	Non-Exposed	42	51	51	42	51	51	42	51	51	42	51	51	42	51	51	42	51	51	42	51	51	42	51	51	42	51	51	42	51	51	42	51	51	42	51	50	42	49	46	41	46	43
				Exposed	42	51	51	42	51	51	42	51	51	42	51	51	42	51	51	42	51	51	42	51	51	42	51	51	42	51	49	42	48	45	39	44	42	37	41	39	34	38	36	32	35	34
		3:12	14.0	Non-Exposed	40	49	49	40	49	49	40	49	49	40	49	49	40	49	49	40	49	49	40	49	49	40	49	49	40	49	49	40	49	49	40	49	49	40	49	49	40	49	46	40	45	43
				Exposed	40	49	49	40	49	49	40	49	49	40	49	49	40	49	49	40	49	49	40	49	49	40	49	49	40	49	49	40	47	45	39	44	42	37	41	39	34	38	36	32	35	34
		4:12	18.4	Non-Exposed	39	49	49	39	49	49	39	49	49	39	49	49	39	49	49	39	49	49	39	49	49	39	49	49	39	49	49	39	49	49	39	49	49	39	49	49	39	48	46	39	45	43
				Exposed	39	49	49	39	49	49	39	49	49	39	49	49	39	49	49	39	49	49	39	49	49	39	49	49	39	49	49	39	47	45	39	44	42	37	40	39	34	38	36	32	35	34
		5:12	22.6	Non-Exposed	39	50		39	50		39	50		39	50		39	50		39	50		39	50		39	50		39	50		39	50		39	50		39	50		39	50		39	49	
				Exposed	39	50		39	50		39	50		39	50		39	50		39	50		39	50		39	50		39	50		39	50		39	49		39	45		39	42		38	39	
		6:12	26.6	Non-Exposed	40	51		40	51		40	51		40	51		40	51		40	51		40	51		40	51		40	51		40	51		40	51		40	51		40	50		40	50	
				Exposed	40	51		40	51		40	51		40	51		40	51		40	51		40	51		40	51		40	51		40	51		40	49		40	45		40	42		38	39	
		7:12	30.3	Non-Exposed	41	52	52	41	52	52	41	52	52	41	52	52	41	52	52	41	52	52	41	52	52	41	52	52	41	52	52	41	52	52	41	52	52	41	52	52	41	48	47	40	45	44
				Exposed	41	52	52	41	52	52	41	52	52	41	52	52	41	52	52	41	52	52	41	52	52	41	52	52	41	51	51	41	47	46	41	43	42	41	39	38	39	37	35	36	34	32
		8:12	33.7	Non-Exposed	42	54	54	42	54	54	42	54	54	42	54	54	42	54	54	42	54	54	42	54	54	42	54	54	42	54	54	42	54	54	42	54	54	42	51	51	42	48	47	41	44	43
				Exposed	42	54	54	42	54	54	42	54	54	42	54	54	42	54	54	42	54	54	42	54	54	42	54	54	42	51	51	42	46	46	42	43	41	42	39	38	39	37	35	36	34	32
		9:12	36.9	Non-Exposed	44	55	55	44	55	55	44	55	55	44	55	55	44	55	55	44	55	55	44	55	55	44	55	55	44	55	55	44	55	55	44	55	55	43	51	51	43	48	47	42	44	43
				Exposed	44	55	55	44	55	55	44	55	55	44	55	55	44	55	55	44	55	55	44	55	55	44	55	55	44	51	51	44	46	46	44	43	41	42	39	38	39	37	35	36	34	32
		10:12	39.8	Non-Exposed	45	57	57	45	57	57	45	57	57	45	57	57	45	57	57	45	57	57	45	57	57	45	57	57	45	57	57	45	57	57	45	55	56	45	51	51	44	47	47	43	44	43
				Exposed	45	57	57	45	57	57	45	57	57	45	57	57	45	57	57	45	57	57	45	57	57	45	56	56	45	51	50	45	46	45	45	42	41	42	39	38	39	36	35	36	34	32
		11:12	42.5	Non-Exposed	46	58	58	46	58	58	46	58	58	46	58	58	46	58	58	46	58	58	46	58	58	46	58	58	46	58	58	46	58	58	46	55	56	46	51	51	45	47	47	44	44	43
				Exposed	46	58	58	46	58	58	46	58	58	46	58	58	46	58	58	46	58	58	46	58	58	46	56	56	46	50	50	46	46	45	45	42	41	42	39	38	39	36	35	36	34	32
		12:12	45	Non-Exposed	47	60	60	47	60	60	47	60	60	47	60	60	47	60	60	47	60	60	47	60	60	47	60	60	47	60	60	47	60	60	47	55	56	47	51	51	46	47	47	46	44	43
				Exposed	47	60	60	47	60	60	47	60	60	47	60	60	47	60	60	47	60	60	47	58	59	47	55	56	47	50	50	47	46	45	45	42	41	41	39	38	39	36	35	36	34	32
	C	2:12	9.5	Non-Exposed	42	51	51	42	51	51	42	51	51	42	51	51	42	51	51	42	51	51	42	51	51	42	51	51	42	51	51	42	50	47	41	46	44	38	42	40	36	39	38	34	37	35
				Exposed	42	51	51	42	51	51	42	51	51	42	51	51	42	51	51	42	51	48	42	48	46	41	46	44	38	42	40	35	38	37	33	36	34	30	33	0	29	0	0	27	0	0
		3:12	14.0	Non-Exposed	40	49	49	40	49	49	40	49	49	40	49	49	40	49	49	40	49	49	40	49	49	40	49	49	40	49	49	40	49	47	40	46	43	38	42	40	36	39	37	34	37	35
				Exposed	40	49	49	40	49	49	40	49	49	40	49	49	40	49	49	40	49	48	40	48	46	40	46	44	38	42	40	35	38	37	32	35	34	30	33	0	29	0	0	27	0	0
		4:12	18.4	Non-Exposed	39	49	49	39	49	49	39	49	49	39	49	49	39	49	49	39	49	49	39	49	49	39	49	49	39	49	49	39	49	47	39	45	43	38	42	40	36	39	37	34	37	35
				Exposed	39	49	49	39	49	49	39	49	49	39	49	49	39	49	49	39	49	48	39	48	46	39	46	44	38	42	40	35	38	36	32	35	34	30	33	0	28	0	0	27	0	0
		5:12	22.6	Non-Exposed	39	50		39	50		39	50		39	50		39	50		39	50		39	50		39	50		39	50		39	50		39	49		39	47		38	44		37	41	
				Exposed	39	50		39	50		39	50		39	50		39	50		39	50		39	50		39	50		39	47		39	43		38	40		36	37		33	34		31	32	
		6:12	26.6	Non-Exposed	40	51		40	51		40	51		40	51		40	51		40	51		40	51		40	51		40	51		40	51		40	50		39	47		38	44		38	41	
				Exposed	40	51		40	51		40	51		40	51		40	51		40	51		40	51		40	51		40	47		40	43		38	40		35	37		33	34		31	32	
25		7:12	30.3	Non-Exposed	41	52	52	41	52	52	41	52	52	41	52	52	41	52	52	41	52	52	41	52	52	41	52	52	41	52	52	41	49	48	40	45	44	40	41	40	39	38	37	38	36	34
				Exposed	41	52	52	41	52	52	41	52	52	41	52	52	41	52	52	41	50	50	41	47	47	41	45	44	41	41	39	40	37	36	37	34	33	34	32	0	32	0	0	30	0	0
		8:12	33.7	Non-Exposed	42	54	54	42	54	54	42	54	54	42	54	54	42	54	54	42	54	54	42	54	54	42	54	54	42	53	53	42	49	48	41	45	44	40	41	40	40	38	37	38	36	34
				Exposed	42	54	54	42	54	54	42	54	54	42	54	54	42	53	53	42	50	50	42	47	47	42	45	44	42	41	39	40	37	36	37	34	32	34	32	0	32	0	0	30	0	0
		9:12	36.9	Non-Exposed	44	55	55	44	55	55	44	55	55	44	55	55	44	55	55	44	55	55	44	55	55	44	55	55	44	53	53	43	48	48	42	45	44	41	41	40	40	38	37	38	36	34
				Exposed	44	55	55	44	55	55	44	55	55	44	55	55	44	53	53	44	50	49	44	47	46	44	45	44	43	41	39	39	37	36	36	34	32	34	32	0	31	0	0	29	0	0
		10:12	39.8	Non-Exposed	45	57	57	45	57	57	45	57	57	45	57	57	45	57	57	45	57	57	45	57	57	45	57	57	45	53	53	44	48	48	43	44	43	42	41	40	40	38	37	38	36	34
				Exposed	45	57	57	45	57	57	45	56	56	45	52	53	45	50	49	45	47	46	45	45	44	43	41	39	39	37	36	36	34	32	34	32	0	31	0	0	29	0	0	29	0	0
		11:12	42.5	Non-Exposed	46	58	58	46	58	58	46	58	58	46	58	58	46	58	58	46	58	58	46	58	58	46	58	58	46	53	53	45	48	48	44	44	43	43	41	40	40	38	37	38	35	34
				Exposed	46	58	58	46	58	58	46	55	56	46	52	52	46	50	49	46	47	46	46	45	44	43	41	39	39	37	35	36	34	32	34	32	0	31	0	0	29	0	0	29	0	0
		12:12	45	Non-Exposed	47	60	60	47	60	60	47	60	60	47	60	60	47	60	60	47	60	60	47	60	60	47	58	59	47	53	53	47	48	48	46	44	43	43	41	40	40	38	36	38	35	34
				Exposed	47	60	60	47	60	60	47	59	60	47	55	56	47	52	52	47	49	49	47	47	46	47	45	44	43	40	39	39	37	35	36	34	32	34	31	0	31	0	0	29	0	0
	D	2:12	9.5	Non-Exposed	42	51	51	42	51	51	42	51	51	42	51	51	42	51	51	42	51	51	42	51	51	42	51	51	42	49	46	40	45	42	37	41	39	35	38	36	33	36	34	31	33	0
				Exposed	42	51	51	42	51	51	42	51	51	42	51	49	42	48	46	41	46	44	39	44	41	37	41	39	34	38	36	32	35	33	30	32	0	28	0	0	26	0	0	0	0	0
		3:12	14.0	Non-Exposed	40	49	49	40	49	49	40	49	49	40	49	49	40	49	49	40	49	49	40	49	49	40	49	49	40	49	46	40	44	42	37	41	39	35	38	36	32	36	34	31	33	0
				Exposed	40	49	49	40	49	49	40	49	49	40	49	48	40	48	46	40	46	43	39	43	41	37	41	39	34	38	36	32	35	33	30	32	0	28	0	0	0	0	0	0	0	0
		4:12	18.4	Non-Exposed	39	49	49	39	49	49	39	49	49	39	49	49	39	49	49	39	49	49	39	49	49	39	49	49	39	48	46	39	44	42	37	41	39	35	38	36	32	35	34	31	33	0
				Exposed	39	49	49	39	49	49	39	49	49	39	49	48	39	48	46	39	46	43	39	43	41	37	41	39	34	38	36	32	35	33	29	32	0	28	0	0	0	0	0	0	0	0
		5:12	22.6	Non-Exposed	39	50		39	50		39	50		39	50		39	50		39	50		39	50		39	50		39	50		39	49		38	46		38	43		37	40		36	37	
				Exposed	39	50		39	50		39	50		39	50		39	50		39	50		39	49		39	46		39	42		37	39		35	36		32	33		30	0		28	0	
		6:12	26.6	Non-Exposed	40	51		40	51		40	51		40	51		40	51		40	51		40	51		40	51		40	50		39	49		39	46		38	42		37	40		36	37	
				Exposed	40	51		40	51		40	51		40	51		40	51		40	51		40	48		40	46		40	42		37	39		34	36		32	33		30	0		28	0	
		7:12	30.3	Non-Exposed	41	52	52	41	52	52	41	52	52	41	52	52	41	52	52	41	52	52	41	52	52	41	52	52	41	48	47	40	44	42	39	40	39	39	37	35	37	34	33	34	32	30
				Exposed	41	52	52	41	52	52	41	50	50	41	47	47	41	45	44	41	42	41	41	40	39	39	37	35	36	33	32	33	0	0	31	0	0	29	0	0	27	0	0	27	0	0
		8:12	33.7	Non-Exposed	42	54	54	42	54	54	42	54	54	42	54	54	42	54	54	42	54	54	42	54	54	42	53	53	42	48	47	41	43	42	40	40	39	39	37	35	37	34	33	34	32	30
				Exposed	42	54	54	42	54	54	42	53	53	42	50	50	42	47	47	42	45	44	42	42	41	42	40	39	39	36	35	36	33	32	33	0	0	31	0	0	29	0	0	27	0	0
		9:12	36.9	Non-Exposed	44	55	55	44	55	55	44	55	55	44	55	55	44	55	55	44	55	55	44	55	55	44	52	52	43	47	47	42	43	42	41	40	38	39	37	35	36	34	32	34	32	0
				Exposed	44	55	55	44	55	55	44	53	53	44	50	50	44	47	46	44	45	44	44	42	41	42	40	39	39	36	35	36	33	32	33	0	0	30	0	0	29	0	0	27	0	0
		10:12	39.8	Non-Exposed	45	57	57	45	57	57	45	57	57	45	57	57	45	57	57	45	57	57	45	55	55	45	52	52	44	47	47	43	43	42	42	40	38	39	37	35	36	34	32	34	32	0
				Exposed	45	57	57	45	56	57	45	53	53	45	50	49	45	47	46	45	44	43	45	42	41	42	40	39	39	36	35	36	33	31	33	0	0	30	0	0	29	0	0	27	0	0
		11:12	42.5	Non-Exposed	46	58	58	46	58	58	46	58	58	46	58	58	46	58	58	46	58	58	46	55	55	46	52	52	45	47	47	44	43	42	42	40	38	39	37	35	36	34	32	34	32	0
				Exposed	46	58	58	46	56	57	46	53	53	46	50	49	46	47	46	46	44	43	44	42	41	42	40	39	39	36	35	35	33	31	33	0	0	30	0	0	28	0	0	27	0	0
		12:12	45	Non-Exposed	47	60	60	47	60	60	47	60	60	47	60	60	47	60	60	47	58	59	47	55	55	47	52	52	46	47	46	45	43	42	42	40	38	39	37	35	36	34	32	34	32	0
				Exposed	47	60	60	47	56	57	47	53	53	47	50	49	47	47	46	47	44	43	44	42	41	42	40	39	39	36	35	35	33	31	33	0	0	30	0	0	28	0	0	27	0	0

Tamarack 2.3 Rail – Hip Flush-Mount on 30 Foot Maximum Mean Roof Height – Portrait – Panel Length = 96 Inches or Less

Ground Snow Load	Exposure Category	Roof Pitch	Roof Angle	Wind Speed (mph)	95			100			105			110			115			120			125			130			140			150			160			170			180			190		
				Roof Area	1	2	3	1	2	3	1	2	3	1	2	3	1	2	3	1	2	3	1	2	3	1	2	3	1	2	3	1	2	3	1	2	3	1	2	3	1	2	3	1	2	3
30	B	2:12	9.5	Non-Exposed	39	47	47	39	47	47	39	47	47	39	47	47	39	47	47	39	47	47	39	47	47	39	47	47	39	47	47	39	47	47	39	47	47	39	47	47	39	47	46	39	46	43
				Exposed	39	47	47	39	47	47	39	47	47	39	47	47	39	47	47	39	47	47	39	47	47	39	47	47	39	47	47	39	47	45	39	44	42	37	41	39	34	38	36	32	35	34
		3:12	14.0	Non-Exposed	37	45	45	37	45	45	37	45	45	37	45	45	37	45	45	37	45	45	37	45	45	37	45	45	37	45	45	37	45	45	37	45	45	37	45	45	37	45	45	37	45	43
				Exposed	37	45	45	37	45	45	37	45	45	37	45	45	37	45	45	37	45	45	37	45	45	37	45	45	37	45	45	37	45	45	37	44	42	37	41	39	34	38	36	32	35	34
		4:12	18.4	Non-Exposed	36	45	45	36	45	45	36	45	45	36	45	45	36	45	45	36	45	45	36	45	45	36	45	45	36	45	45	36	45	45	36	45	45	36	45	45	36	45	45	36	45	43
				Exposed	36	45	45	36	45	45	36	45	45	36	45	45	36	45	45	36	45	45	36	45	45	36	45	45	36	45	45	36	45	45	36	44	42	36	40	39	34	38	36	32	35	34
		5:12	22.6	Non-Exposed	36	46		36	46		36	46		36	46		36	46		36	46		36	46		36	46		36	46		36	46		36	46		36	46		36	46		36	46	
				Exposed	36	46		36	46		36	46		36	46		36	46		36	46		36	46		36	46		36	46		36	46		36	46		36	45		36	42		36	39	
		6:12	26.6	Non-Exposed	37	47		37	47		37	47		37	47		37	47		37	47		37	47		37	47		37	47		37	47		37	47		37	47		37	47		37	47	
				Exposed	37	47		37	47		37	47		37	47		37	47		37	47		37	47		37	47		37	47		37	47		37	47		37	45		37	42		37	39	
		7:12	30.3	Non-Exposed	38	49	49	38	49	49	38	49	49	38	49	49	38	49	49	38	49	49	38	49	49	38	49	49	38	49	49	38	49	49	38	49	49	38	49	49	38	48	47	38	45	44
				Exposed	38	49	49	38	49	49	38	49	49	38	49	49	38	49	49	38	49	49	38	49	49	38	49	49	38	49	49	38	47	46	38	43	42	38	39	38	38	37	35	36	34	32
		8:12	33.7	Non-Exposed	39	51	51	39	51	51	39	51	51	39	51	51	39	51	51	39	51	51	39	51	51	39	51	51	39	51	51	39	51	51	39	51	51	39	51	51	39	48	47	39	44	43
				Exposed	39	51	51	39	51	51	39	51	51	39	51	51	39	51	51	39	51	51	39	51	51	39	51	51	39	51	51	39	46	46	39	43	41	39	39	38	39	37	35	36	34	32
		9:12	36.9	Non-Exposed	40	52	52	40	52	52	40	52	52	40	52	52	40	52	52	40	52	52	40	52	52	40	52	52	40	52	52	40	52	52	40	52	52	40	51	51	40	48	47	40	44	43
				Exposed	40	52	52	40	52	52	40	52	52	40	52	52	40	52	52	40	52	52	40	52	52	40	52	52	40	51	51	40	46	46	40	43	41	40	39	38	39	37	35	36	34	32
		10:12	39.8	Non-Exposed	42	54	54	42	54	54	42	54	54	42	54	54	42	54	54	42	54	54	42	54	54	42	54	54	42	54	54	42	54	54	42	54	54	42	51	51	42	47	47	41	44	43
				Exposed	42	54	54	42	54	54	42	54	54	42	54	54	42	54	54	42	54	54	42	54	54	42	54	54	42	51	50	42	46	45	42	42	41	42	39	38	39	36	35	36	34	32
		11:12	42.5	Non-Exposed	44	56	56	44	56	56	44	56	56	44	56	56	44	56	56	44	56	56	44	56	56	44	56	56	44	56	56	44	56	56	44	55	56	43	51	51	43	47	47	42	44	43
				Exposed	44	56	56	44	56	56	44	56	56	44	56	56	44	56	56	44	56	56	44	56	56	44	56	56	44	50	50	44	46	45	44	42	41	42	39	38	39	36	35	36	34	32
		12:12	45	Non-Exposed	45	57	57	45	57	57	45	57	57	45	57	57	45	57	57	45	57	57	45	57	57	45	57	57	45	57	57	45	57	57	45	55	56	45	51	51	44	47	47	43	44	43
				Exposed	45	57	57	45	57	57	45	57	57	45	57	57	45	57	57	45	57	57	45	57	57	45	55	56	45	50	50	45	46	45	45	42	41	41	39	38	39	36	35	36	34	32
	C	2:12	9.5	Non-Exposed	39	47	47	39	47	47	39	47	47	39	47	47	39	47	47	39	47	47	39	47	47	39	47	47	39	47	47	39	47	47	39	46	44	38	42	40	36	39	38	34	37	35
				Exposed	39	47	47	39	47	47	39	47	47	39	47	47	39	47	47	39	47	47	39	47	46	39	46	44	38	42	40	35	38	37	33	36	34	30	33	0	29	0	0	27	0	0
		3:12	14.0	Non-Exposed	37	45	45	37	45	45	37	45	45	37	45	45	37	45	45	37	45	45	37	45	45	37	45	45	37	45	45	37	45	45	37	45	43	37	42	40	36	39	37	34	37	35
				Exposed	37	45	45	37	45	45	37	45	45	37	45	45	37	45	45	37	45	45	37	45	44	37	42	40	35	38	37	32	35	34	30	33	0	29	0	0	27	0	0	27	0	0
		4:12	18.4	Non-Exposed	36	45	45	36	45	45	36	45	45	36	45	45	36	45	45	36	45	45	36	45	45	36	45	45	36	45	45	36	45	45	36	45	43	36	42	40	36	39	37	34	37	35
				Exposed	36	45	45	36	45	45	36	45	45	36	45	45	36	45	45	36	45	45	36	45	44	36	42	40	35	38	36	32	35	34	30	33	0	28	0	0	27	0	0	27	0	0
		5:12	22.6	Non-Exposed	36	46		36	46		36	46		36	46		36	46		36	46		36	46		36	46		36	46		36	46		36	46		36	45		36	44		35	41	
				Exposed	36	46		36	46		36	46		36	46		36	46		36	46		36	46		36	46		36	46		36	43		36	40		36	37		33	34		31	32	
		6:12	26.6	Non-Exposed	37	47		37	47		37	47		37	47		37	47		37	47		37	47		37	47		37	47		37	47		37	47		37	46		36	44		35	41	
				Exposed	37	47		37	47		37	47		37	47		37	47		37	47		37	47		37	47		37	47		37	43		37	40		35	37		33	34		31	32	
30		7:12	30.3	Non-Exposed	38	49	49	38	49	49	38	49	49	38	49	49	38	49	49	38	49	49	38	49	49	38	49	49	38	49	49	38	49	48	38	45	44	37	41	40	37	38	37	36	36	34
				Exposed	38	49	49	38	49	49	38	49	49	38	49	49	38	49	49	38	49	49	38	47	47	38	45	44	38	41	39	38	37	36	37	34	33	34	32	0	32	0	0	30	0	0
		8:12	33.7	Non-Exposed	39	51	51	39	51	51	39	51	51	39	51	51	39	51	51	39	51	51	39	51	51	39	51	51	39	51	51	39	49	48	39	45	44	38	41	40	38	38	37	37	36	34
				Exposed	39	51	51	39	51	51	39	51	51	39	51	51	39	51	51	39	50	50	39	47	47	39	45	44	39	41	39	39	37	36	37	34	32	34	32	0	32	0	0	30	0	0
		9:12	36.9	Non-Exposed	40	52	52	40	52	52	40	52	52	40	52	52	40	52	52	40	52	52	40	52	52	40	52	52	40	52	52	40	48	48	40	45	44	39	41	40	38	38	37	38	36	34
				Exposed	40	52	52	40	52	52	40	52	52	40	52	52	40	52	52	40	50	49	40	47	46	40	45	44	40	41	39	39	37	36	36	34	32	34	32	0	31	0	0	29	0	0
		10:12	39.8	Non-Exposed	42	54	54	42	54	54	42	54	54	42	54	54	42	54	54	42	54	54	42	54	54	42	54	54	42	53	53	42	48	48	41	44	43	40	41	40	40	38	37	38	36	34
				Exposed	42	54	54	42	54	54	42	54	54	42	54	54	42	52	53	42	50	49	42	47	46	42	45	44	42	41	39	39	37	36	36	34	32	34	32	0	31	0	0	29	0	0
		11:12	42.5	Non-Exposed	44	56	56	44	56	56	44	56	56	44	56	56	44	56	56	44	56	56	44	56	56	44	56	56	44	53	53	43	48	48	42	44	43	41	41	40	40	38	37	38	35	34
				Exposed	44	56	56	44	56	56	44	56	56	44	55	56	44	52	52	44	50	49	44	47	46	44	45	44	43	41	39	39	37	35	36	34	32	34	32	0	31	0	0	29	0	0
		12:12	45	Non-Exposed	45	57	57	45	57	57	45	57	57	45	57	57	45	57	57	45	57	57	45	57	57	45	53	53	44	48	48	43	44	43	43	41	40	40	38	36	38	35	34	38	35	34
				Exposed	45	57	57	45	57	57	45	57	57	45	55	56	45	52	52	45	49	49	45	47	46	45	45	44	43	40	39	39	37	35	36	34	32	34	31	0	31	0	0	29	0	0
	D	2:12	9.5	Non-Exposed	39	47	47	39	47	47	39	47	47	39	47	47	39	47	47	39	47	47	39	47	47	39	47	47	39	47	46	39	45	42	37	41	39	35	38	36	33	36	34	31	33	0
				Exposed	39	47	47	39	47	47	39	47	47	39	47	47	39	47	46	39	46	44	39	44	41	37	41	39	34	38	36	32	35	33	30	32	0	28	0	0	26	0	0	0	0	0
		3:12	14.0	Non-Exposed	37	45	45	37	45	45	37	45	45	37	45	45	37	45	45	37	45	45	37	45	45	37	45	45	37	45	45	37	44	42	36	41	39	35	38	36	32	36	34	31	33	0
				Exposed	37	45	45	37	45	45	37	45	45	37	45	45	37	45	45	37	45	43	37	43	41	37	41	39	34	38	36	32	35	33	30	32	0	28	0	0	0	0	0	0	0	0
		4:12	18.4	Non-Exposed	36	45	45	36	45	45	36	45	45	36	45	45	36	45	45	36	45	45	36	45	45	36	45	45	36	45	45	36	44	42	36	41	39	35	38	36	32	35	34	31	33	0
				Exposed	36	45	45	36	45	45	36	45	45	36	45	45	36	45	45	36	45	43	36	43	41	36	41	39	34	38	36	32	35	33	29	32	0	28	0	0	0	0	0	0	0	0
		5:12	22.6	Non-Exposed	36	46		36	46		36	46		36	46		36	46		36	46		36	46		36	46		36	46		36	46		36	45		35	43		35	40		34	37	
				Exposed	36	46		36	46		36	46		36	46		36	46		36	46		36	46		36	42		36	39		35	36		32	33		30	0		28	0			
		6:12	26.6	Non-Exposed	37	47		37	47		37	47		37	47		37	47		37	47		37	47		37	47		37	47		37	47		36	46		36	42		35	40		34	37	
				Exposed	37	47		37	47		37	47		37	47		37	47		37	47		37	47		37	46		37	42		37	39		34	36		32	33		30	0		28	0	
		7:12	30.3	Non-Exposed	38	49	49	38	49	49	38	49	49	38	49	49	38	49	49	38	49	49	38	49	49	38	49	49	38	48	47	38	44	42	37	40	39	36	37	35	36	34	33	34	32	30
				Exposed	38	49	49	38	49	49	38	49	49	38	49	49	38	47	47	38	45	44	38	42	41	38	40	39	38	37	35	36	33	32	33	0	0	31	0	0	29	0	0	27	0	0
		8:12	33.7	Non-Exposed	39	51	51	39	51	51	39	51	51	39	51	51	39	51	51	39	51	51	39	51	51	39	51	51	39	48	47	39	43	42	38	40	39	37	37	35	37	34	33	34	32	30
				Exposed	39	51	51	39	51	51	39	51	51	39	50	50	39	47	47	39	45	44	39	42	41	39	40	39	39	36	35	36	33	32	33	0	0	31	0	0	29	0	0	27	0	0
		9:12	36.9	Non-Exposed	40	52	52	40	52	52	40	52	52	40	52	52	40	52	52	40	52	52	40	52	52	40	52	52	40	47	47	40	43	42	39	40	38	38	37	35	36	34	32	34	32	0
				Exposed	40	52	52	40	52	52	40	52	52	40	50	50	40	47	46	40	45	44	40	42	41	40	40	39	39	36	35	36	33	32	33	0	0	30	0	0	29	0	0	27	0	0
		10:12	39.8	Non-Exposed	42	54	54	42	54	54	42	54	54	42	54	54	42	54	54	42	54	54	42	54	54	42	52	52	42	47	47	41	43	42	40	40	38	39	37	35	36	34	32	34	32	0
				Exposed	42	54	54	42	54	54	42	53	53	42	50	49	42	47	46	42	44	43	42	42	41	42	40	39	39	36	35	36	33	31	33	0	0	30	0	0	29	0	0	27	0	0
		11:12	42.5	Non-Exposed	44	56	56	44	56	56	44	56	56	44	56	56	44	56	56	44	56	56	44	55	55	44	52	52	43	47	47	42	43	42	41	40	38	39	37	35	36	34	32	34	32	0
				Exposed	44	56	56	44	56	56	44	53	53	44	50	49	44	47	46	44	44	43	44	42	41	42	40	39	39	36	35	35	33	31	33	0	0	30	0	0	28	0	0	27	0	0
		12:12	45	Non-Exposed	45	57	57	45	57	57	45	57	57	45	57	57	45	57	57	45	57	57	45	55	55	45	52	52	44	47	46	43	43	42	42	40	38	39	37	35	36	34	32	34	32	0
				Exposed	45	57	57	45	56	57	45	53	53	45	50	49	45	47	46	45	44	43	44	42	41	42	40	39	39	36	35	35	33	31	33	0	0	30	0	0	28	0	0	27	0	0

Tamarack 2.3 Rail – Hip Flush-Mount on 30 Foot Maximum Mean Roof Height – Portrait – Panel Length = 96 Inches or Less

Ground Snow Load	Exposure Category	Roof Pitch	Roof Angle	Wind Speed (mph)	95			100			105			110			115			120			125			130			140			150			160			170			180			190		
				Roof Area	1	2	3	1	2	3	1	2	3	1	2	3	1	2	3	1	2	3	1	2	3	1	2	3	1	2	3	1	2	3	1	2	3	1	2	3	1	2	3	1	2	3
35	B	2:12	9.5	Non-Exposed	36	44	44	36	44	44	36	44	44	36	44	44	36	44	44	36	44	44	36	44	44	36	44	44	36	44	44	36	44	44	36	44	44	36	44	44	36	44	44	36	44	43
				Exposed	36	44	44	36	44	44	36	44	44	36	44	44	36	44	44	36	44	44	36	44	44	36	44	44	36	44	44	36	44	44	36	44	42	36	41	39	34	38	36	32	35	34
		3:12	14.0	Non-Exposed	34	42	42	34	42	42	34	42	42	34	42	42	34	42	42	34	42	42	34	42	42	34	42	42	34	42	42	34	42	42	34	42	42	34	42	42	34	42	42	34	42	42
				Exposed	34	42	42	34	42	42	34	42	42	34	42	42	34	42	42	34	42	42	34	42	42	34	42	42	34	42	42	34	42	42	34	42	42	34	41	39	34	38	36	32	35	34
		4:12	18.4	Non-Exposed	34	42	42	34	42	42	34	42	42	34	42	42	34	42	42	34	42	42	34	42	42	34	42	42	34	42	42	34	42	42	34	42	42	34	42	42	34	42	42	34	42	42
				Exposed	34	42	42	34	42	42	34	42	42	34	42	42	34	42	42	34	42	42	34	42	42	34	42	42	34	42	42	34	42	42	34	42	42	34	40	39	34	38	36	32	35	34
		5:12	22.6	Non-Exposed	34	43		34	43		34	43		34	43		34	43		34	43		34	43		34	43		34	43		34	43		34	43		34	43		34	43		34	43	
				Exposed	34	43		34	43		34	43		34	43		34	43		34	43		34	43		34	43		34	43		34	43		34	43		34	43		34	42		34	39	
		6:12	26.6	Non-Exposed	34	44		34	44		34	44		34	44		34	44		34	44		34	44		34	44		34	44		34	44		34	44		34	44		34	44		34	44	
				Exposed	34	44		34	44		34	44		34	44		34	44		34	44		34	44		34	44		34	44		34	44		34	44		34	44		34	42		34	39	
		7:12	30.3	Non-Exposed	35	46	46	35	46	46	35	46	46	35	46	46	35	46	46	35	46	46	35	46	46	35	46	46	35	46	46	35	46	46	35	46	46	35	46	46	35	46	46	35	45	44
				Exposed	35	46	46	35	46	46	35	46	46	35	46	46	35	46	46	35	46	46	35	46	46	35	46	46	35	46	46	35	46	46	35	43	42	35	39	38	35	37	35	35	34	32
		8:12	33.7	Non-Exposed	36	47	47	36	47	47	36	47	47	36	47	47	36	47	47	36	47	47	36	47	47	36	47	47	36	47	47	36	47	47	36	47	47	36	47	47	36	47	47	36	44	43
				Exposed	36	47	47	36	47	47	36	47	47	36	47	47	36	47	47	36	47	47	36	47	47	36	47	47	36	47	47	36	46	46	36	43	41	36	39	38	36	37	35	36	34	32
		9:12	36.9	Non-Exposed	38	50	50	38	50	50	38	50	50	38	50	50	38	50	50	38	50	50	38	50	50	38	50	50	38	50	50	38	50	50	38	50	50	38	50	50	38	48	47	38	44	43
				Exposed	38	50	50	38	50	50	38	50	50	38	50	50	38	50	50	38	50	50	38	50	50	38	50	50	38	50	50	38	46	46	38	43	41	38	39	38	38	37	35	36	34	32
		10:12	39.8	Non-Exposed	39	51	51	39	51	51	39	51	51	39	51	51	39	51	51	39	51	51	39	51	51	39	51	51	39	51	51	39	51	51	39	51	51	39	51	51	39	47	47	39	44	43
				Exposed	39	51	51	39	51	51	39	51	51	39	51	51	39	51	51	39	51	51	39	51	51	39	51	51	39	51	50	39	46	45	39	42	41	39	39	38	39	36	35	36	34	32
		11:12	42.5	Non-Exposed	41	53	53	41	53	53	41	53	53	41	53	53	41	53	53	41	53	53	41	53	53	41	53	53	41	53	53	41	53	53	41	53	53	41	51	51	41	47	47	40	44	43
				Exposed	41	53	53	41	53	53	41	53	53	41	53	53	41	53	53	41	53	53	41	53	53	41	53	53	41	50	50	41	46	45	41	42	41	41	39	38	39	36	35	36	34	32
		12:12	45	Non-Exposed	43	55	55	43	55	55	43	55	55	43	55	55	43	55	55	43	55	55	43	55	55	43	55	55	43	55	55	43	55	55	43	55	55	43	51	51	42	47	47	42	44	43
				Exposed	43	55	55	43	55	55	43	55	55	43	55	55	43	55	55	43	55	55	43	55	55	43	55	55	43	50	50	43	46	45	43	42	41	41	39	38	39	36	35	36	34	32
	C	2:12	9.5	Non-Exposed	36	44	44	36	44	44	36	44	44	36	44	44	36	44	44	36	44	44	36	44	44	36	44	44	36	44	44	36	44	44	36	44	44	36	42	40	36	39	38	34	37	35
				Exposed	36	44	44	36	44	44	36	44	44	36	44	44	36	44	44	36	44	44	36	44	44	36	44	44	36	42	40	35	38	37	33	36	34	30	33	0	29	0	0	27	0	0
		3:12	14.0	Non-Exposed	34	42	42	34	42	42	34	42	42	34	42	42	34	42	42	34	42	42	34	42	42	34	42	42	34	42	42	34	42	42	34	42	42	34	42	40	34	39	37	34	37	35
				Exposed	34	42	42	34	42	42	34	42	42	34	42	42	34	42	42	34	42	42	34	42	42	34	42	42	34	42	40	34	38	37	32	35	34	30	33	0	29	0	0	27	0	0
		4:12	18.4	Non-Exposed	34	42	42	34	42	42	34	42	42	34	42	42	34	42	42	34	42	42	34	42	42	34	42	42	34	42	42	34	42	42	34	42	42	34	42	40	34	39	37	33	37	35
				Exposed	34	42	42	34	42	42	34	42	42	34	42	42	34	42	42	34	42	42	34	42	42	34	42	42	34	42	40	34	38	36	32	35	34	30	33	0	28	0	0	27	0	0
		5:12	22.6	Non-Exposed	34	43		34	43		34	43		34	43		34	43		34	43		34	43		34	43		34	43		34	43		34	43		34	43		34	42		33	41	
				Exposed	34	43		34	43		34	43		34	43		34	43		34	43		34	43		34	43		34	43		34	43		34	40		34	37		33	34		31	32	
		6:12	26.6	Non-Exposed	34	44		34	44		34	44		34	44		34	44		34	44		34	44		34	44		34	44		34	44		34	44		34	44		34	43		33	41	
				Exposed	34	44		34	44		34	44		34	44		34	44		34	44		34	44		34	44		34	44		34	43		34	40		34	37		33	34		31	32	
35		7:12	30.3	Non-Exposed	35	46	46	35	46	46	35	46	46	35	46	46	35	46	46	35	46	46	35	46	46	35	46	46	35	46	46	35	46	46	35	45	44	35	41	40	35	38	37	34	36	34
				Exposed	35	46	46	35	46	46	35	46	46	35	46	46	35	46	46	35	46	46	35	46	46	35	45	44	35	41	39	35	37	36	35	34	33	34	32	0	32	0	0	30	0	0
		8:12	33.7	Non-Exposed	36	47	47	36	47	47	36	47	47	36	47	47	36	47	47	36	47	47	36	47	47	36	47	47	36	47	47	36	47	47	36	45	44	36	41	40	36	38	37	35	36	34
				Exposed	36	47	47	36	47	47	36	47	47	36	47	47	36	47	47	36	47	47	36	47	47	36	45	44	36	41	39	36	37	36	36	34	32	34	32	0	32	0	0	30	0	0
		9:12	36.9	Non-Exposed	38	50	50	38	50	50	38	50	50	38	50	50	38	50	50	38	50	50	38	50	50	38	50	50	38	50	50	38	48	48	38	45	44	37	41	40	37	38	37	36	36	34
				Exposed	38	50	50	38	50	50	38	50	50	38	50	50	38	50	50	38	50	49	38	47	46	38	45	44	38	41	39	38	37	36	36	34	32	34	32	0	31	0	0	29	0	0
		10:12	39.8	Non-Exposed	39	51	51	39	51	51	39	51	51	39	51	51	39	51	51	39	51	51	39	51	51	39	51	51	39	51	51	39	48	48	39	44	43	38	41	40	38	38	37	37	36	34
				Exposed	39	51	51	39	51	51	39	51	51	39	51	51	39	51	51	39	50	49	39	47	46	39	45	44	39	41	39	39	37	36	36	34	32	34	32	0	31	0	0	29	0	0
		11:12	42.5	Non-Exposed	41	53	53	41	53	53	41	53	53	41	53	53	41	53	53	41	53	53	41	53	53	41	53	53	41	53	53	41	48	48	40	44	43	40	41	40	39	38	37	38	35	34
				Exposed	41	53	53	41	53	53	41	53	53	41	53	53	41	52	52	41	50	49	41	47	46	41	45	44	41	41	39	39	37	35	36	34	32	34	32	0	31	0	0	29	0	0
		12:12	45	Non-Exposed	43	55	55	43	55	55	43	55	55	43	55	55	43	55	55	43	55	55	43	55	55	43	55	55	43	53	53	42	48	48	42	44	43	41	41	40	40	38	36	38	35	34
				Exposed	43	55	55	43	55	55	43	55	55	43	55	55	43	52	52	43	49	49	43	47	46	43	45	44	43	40	39	39	37	35	36	34	32	34	31	0	31	0	0	29	0	0
	D	2:12	9.5	Non-Exposed	36	44	44	36	44	44	36	44	44	36	44	44	36	44	44	36	44	44	36	44	44	36	44	44	36	44	44	36	44	42	36	41	39	35	38	36	33	36	34	31	33	0
				Exposed	36	44	44	36	44	44	36	44	44	36	44	44	36	44	44	36	44	44	36	44	41	36	41	39	34	38	36	32	35	33	30	32	0	28	0	0	26	0	0	0	0	0
		3:12	14.0	Non-Exposed	34	42	42	34	42	42	34	42	42	34	42	42	34	42	42	34	42	42	34	42	42	34	42	42	34	42	42	34	42	42	34	41	39	34	38	36	32	36	34	31	33	0
				Exposed	34	42	42	34	42	42	34	42	42	34	42	42	34	42	42	34	42	42	34	42	41	34	41	39	34	38	36	32	35	33	30	32	0	28	0	0	0	0	0	0	0	0
		4:12	18.4	Non-Exposed	34	42	42	34	42	42	34	42	42	34	42	42	34	42	42	34	42	42	34	42	42	34	42	42	34	42	42	34	42	42	34	41	39	33	38	36	32	35	34	31	33	0
				Exposed	34	42	42	34	42	42	34	42	42	34	42	42	34	42	42	34	42	42	34	42	41	34	41	39	34	38	36	32	35	33	29	32	0	28	0	0	0	0	0	0	0	0
		5:12	22.6	Non-Exposed	34	43		34	43		34	43		34	43		34	43		34	43		34	43		34	43		34	43		34	43		34	43		34	42		33	40		32	37	
				Exposed	34	43		34	43		34	43		34	43		34	43		34	43		34	43		34	43		34	42		34	39		34	36		32	33		30	0		28	0	
		6:12	26.6	Non-Exposed	34	44		34	44		34	44		34	44		34	44		34	44		34	44		34	44		34	44		34	44		34	43		34	42		33	40		33	37	
				Exposed	34	44		34	44		34	44		34	44		34	44		34	44		34	44		34	44		34	42		34	39		34	36		32	33		30	0		28	0	
		7:12	30.3	Non-Exposed	35	46	46	35	46	46	35	46	46	35	46	46	35	46	46	35	46	46	35	46	46	35	46	46	35	46	46	35	44	42	35	40	39	35	37	35	34	34	33	33	32	30
				Exposed	35	46	46	35	46	46	35	46	46	35	46	46	35	46	46	35	45	44	35	42	41	35	40	39	35	37	35	35	33	32	33	0	0	31	0	0	29	0	0	27	0	0
		8:12	33.7	Non-Exposed	36	47	47	36	47	47	36	47	47	36	47	47	36	47	47	36	47	47	36	47	47	36	47	47	36	47	47	36	43	42	36	40	39	35	37	35	35	34	33	34	32	30
				Exposed	36	47	47	36	47	47	36	47	47	36	47	47	36	47	47	36	45	44	36	42	41	36	40	39	36	36	35	36	33	32	33	0	0	31	0	0	29	0	0	27	0	0
		9:12	36.9	Non-Exposed	38	50	50	38	50	50	38	50	50	38	50	50	38	50	50	38	50	50	38	50	50	38	50	50	38	47	47	38	43	42	37	40	38	36	37	35	36	34	32	34	32	0
				Exposed	38	50	50	38	50	50	38	50	50	38	50	50	38	47	46	38	45	44	38	42	41	38	40	39	38	36	35	36	33	32	33	0	0	30	0	0	29	0	0	27	0	0
		10:12	39.8	Non-Exposed	39	51	51	39	51	51	39	51	51	39	51	51	39	51	51	39	51	51	39	51	51	39	51	51	39	47	47	39	43	42	38	40	38	37	37	35	36	34	32	34	32	0
				Exposed	39	51	51	39	51	51	39	51	51	39	50	49	39	47	46	39	44	43	39	42	41	39	40	39	39	36	35	36	33	31	33	0	0	30	0	0	29	0	0	27	0	0
		11:12	42.5	Non-Exposed	41	53	53	41	53	53	41	53	53	41	53	53	41	53	53	41	53	53	41	53	53	41	53	53	41	47	47	40	43	42	39	40	38	39	37	35	36	34	32	34	32	0
				Exposed	41	53	53	41	53	53	41	50	49	41	47	46	41	44	43	41	42	41	41	40	39	39	36	35	35	33	31	33	0	0	30	0	0	28	0	0	27	0	0	27	0	0
		12:12	45	Non-Exposed	43	55	55	43	55	55	43	55	55	43	55	55	43	55	55	43	55	55	43	55	55	43	52	52	42	47	46	41	43	42	41	40	38	39	37	35	36	34	32	34	32	0
				Exposed	43	55	55	43	55	55	43	53	53	43	50	49	43	47	46	43	44	43	43	42	41	42	40	39	39	36	35	35	33	31	33	0	0	30	0	0	28	0	0	27	0	0

Tamarack 2.3 Rail – Hip Flush-Mount on 30 Foot Maximum Mean Roof Height – Portrait – Panel Length = 96 Inches or Less

Ground Snow Load	Exposure Category	Roof Pitch	Roof Angle	Wind Speed (mph)	95			100			105			110			115			120			125			130			140			150			160			170			180			190		
				Roof Area	1	2	3	1	2	3	1	2	3	1	2	3	1	2	3	1	2	3	1	2	3	1	2	3	1	2	3	1	2	3	1	2	3	1	2	3	1	2	3	1	2	3
40	B	2:12	9.5	Non-Exposed	34	41	41	34	41	41	34	41	41	34	41	41	34	41	41	34	41	41	34	41	41	34	41	41	34	41	41	34	41	41	34	41	41	34	41	41	34	41	41	34	41	41
				Exposed	34	41	41	34	41	41	34	41	41	34	41	41	34	41	41	34	41	41	34	41	41	34	41	41	34	41	41	34	41	41	34	41	41	34	41	39	34	38	36	32	35	34
		3:12	14.0	Non-Exposed	32	39	39	32	39	39	32	39	39	32	39	39	32	39	39	32	39	39	32	39	39	32	39	39	32	39	39	32	39	39	32	39	39	32	39	39	32	39	39	32	39	39
				Exposed	32	39	39	32	39	39	32	39	39	32	39	39	32	39	39	32	39	39	32	39	39	32	39	39	32	39	39	32	39	39	32	39	39	32	39	39	32	38	36	32	35	34
		4:12	18.4	Non-Exposed	32	40	40	32	40	40	32	40	40	32	40	40	32	40	40	32	40	40	32	40	40	32	40	40	32	40	40	32	40	40	32	40	40	32	40	40	32	40	40	32	40	40
				Exposed	32	40	40	32	40	40	32	40	40	32	40	40	32	40	40	32	40	40	32	40	40	32	40	40	32	40	40	32	40	40	32	40	40	32	40	39	32	38	36	32	35	34
		5:12	22.6	Non-Exposed	32	40		32	40		32	40		32	40		32	40		32	40		32	40		32	40		32	40		32	40		32	40		32	40		32	40		32	40	
				Exposed	32	40		32	40		32	40		32	40		32	40		32	40		32	40		32	40		32	40		32	40		32	40		32	40		32	40		32	39	
		6:12	26.6	Non-Exposed	32	41		32	41		32	41		32	41		32	41		32	41		32	41		32	41		32	41		32	41		32	41		32	41		32	41		32	41	
				Exposed	32	41		32	41		32	41		32	41		32	41		32	41		32	41		32	41		32	41		32	41		32	41		32	41		32	41		32	39	
		7:12	30.3	Non-Exposed	33	43	43	33	43	43	33	43	43	33	43	43	33	43	43	33	43	43	33	43	43	33	43	43	33	43	43	33	43	43	33	43	43	33	43	43	33	43	43	33	43	43
				Exposed	33	43	43	33	43	43	33	43	43	33	43	43	33	43	43	33	43	43	33	43	43	33	43	43	33	43	43	33	43	43	33	43	43	33	43	42	33	39	38	33	37	35
		8:12	33.7	Non-Exposed	34	45	45	34	45	45	34	45	45	34	45	45	34	45	45	34	45	45	34	45	45	34	45	45	34	45	45	34	45	45	34	45	45	34	45	45	34	45	45	34	44	43
				Exposed	34	45	45	34	45	45	34	45	45	34	45	45	34	45	45	34	45	45	34	45	45	34	45	45	34	45	45	34	45	45	34	43	41	34	39	38	34	37	35	34	34	32
		9:12	36.9	Non-Exposed	36	47	47	36	47	47	36	47	47	36	47	47	36	47	47	36	47	47	36	47	47	36	47	47	36	47	47	36	47	47	36	47	47	36	47	47	36	47	47	36	44	43
				Exposed	36	47	47	36	47	47	36	47	47	36	47	47	36	47	47	36	47	47	36	47	47	36	47	47	36	47	47	36	46	46	36	43	41	36	39	38	36	37	35	36	34	32
		10:12	39.8	Non-Exposed	37	49	49	37	49	49	37	49	49	37	49	49	37	49	49	37	49	49	37	49	49	37	49	49	37	49	49	37	49	49	37	49	49	37	49	49	37	47	47	37	44	43
				Exposed	37	49	49	37	49	49	37	49	49	37	49	49	37	49	49	37	49	49	37	49	49	37	49	49	37	49	49	37	46	45	37	42	41	37	39	38	37	36	35	36	34	32
		11:12	42.5	Non-Exposed	39	51	51	39	51	51	39	51	51	39	51	51	39	51	51	39	51	51	39	51	51	39	51	51	39	51	51	39	51	51	39	51	51	39	51	51	39	47	47	39	44	43
				Exposed	39	51	51	39	51	51	39	51	51	39	51	51	39	51	51	39	51	51	39	51	51	39	51	51	39	50	50	39	46	45	39	42	41	39	39	38	39	36	35	36	34	32
		12:12	45	Non-Exposed	41	53	53	41	53	53	41	53	53	41	53	53	41	53	53	41	53	53	41	53	53	41	53	53	41	53	53	41	53	53	41	53	53	41	51	51	40	47	47	40	44	43
				Exposed	41	53	53	41	53	53	41	53	53	41	53	53	41	53	53	41	53	53	41	53	53	41	53	53	41	50	50	41	46	45	41	42	41	41	39	38	39	36	35	36	34	32
	C	2:12	9.5	Non-Exposed	34	41	41	34	41	41	34	41	41	34	41	41	34	41	41	34	41	41	34	41	41	34	41	41	34	41	41	34	41	41	34	41	41	34	41	40	34	39	38	34	37	35
				Exposed	34	41	41	34	41	41	34	41	41	34	41	41	34	41	41	34	41	41	34	41	41	34	41	41	34	41	40	34	38	37	33	36	34	30	33	0	29	0	0	27	0	0
		3:12	14.0	Non-Exposed	32	39	39	32	39	39	32	39	39	32	39	39	32	39	39	32	39	39	32	39	39	32	39	39	32	39	39	32	39	39	32	39	39	32	39	39	32	39	37	32	37	35
				Exposed	32	39	39	32	39	39	32	39	39	32	39	39	32	39	39	32	39	39	32	39	39	32	39	39	32	39	39	32	38	37	32	35	34	30	33	0	29	0	0	27	0	0
		4:12	18.4	Non-Exposed	32	40	40	32	40	40	32	40	40	32	40	40	32	40	40	32	40	40	32	40	40	32	40	40	32	40	40	32	40	40	32	40	40	32	40	40	32	39	37	32	37	35
				Exposed	32	40	40	32	40	40	32	40	40	32	40	40	32	40	40	32	40	40	32	40	40	32	40	40	32	40	40	32	38	36	32	35	34	30	33	0	28	0	0	27	0	0
		5:12	22.6	Non-Exposed	32	40		32	40		32	40		32	40		32	40		32	40		32	40		32	40		32	40		32	40		32	40		32	40		32	40		32	40	
				Exposed	32	40		32	40		32	40		32	40		32	40		32	40		32	40		32	40		32	40		32	37		32	34		31	32							
		6:12	26.6	Non-Exposed	32	41		32	41		32	41		32	41		32	41		32	41		32	41		32	41		32	41		32	41		32	41		32	41		32	40				
				Exposed	32	41		32	41		32	41		32	41		32	41		32	41		32	41		32	41		32	41		32	37		32	34		31	32							
40		7:12	30.3	Non-Exposed	33	43	43	33	43	43	33	43	43	33	43	43	33	43	43	33	43	43	33	43	43	33	43	43	33	43	43	33	43	43	33	43	43	33	41	40	33	38	37	33	36	34
				Exposed	33	43	43	33	43	43	33	43	43	33	43	43	33	43	43	33	43	43	33	43	43	33	43	43	33	41	39	33	37	36	33	34	33	33	32	0	32	0	0	30	0	0
		8:12	33.7	Non-Exposed	34	45	45	34	45	45	34	45	45	34	45	45	34	45	45	34	45	45	34	45	45	34	45	45	34	45	45	34	45	45	34	45	44	34	41	40	34	38	37	34	36	34
				Exposed	34	45	45	34	45	45	34	45	45	34	45	45	34	45	45	34	45	45	34	45	45	34	45	44	34	41	39	34	37	36	34	34	32	34	32	0	32	0	0	30	0	0
		9:12	36.9	Non-Exposed	36	47	47	36	47	47	36	47	47	36	47	47	36	47	47	36	47	47	36	47	47	36	47	47	36	47	47	36	47	47	36	45	44	36	41	40	35	38	37	35	36	34
				Exposed	36	47	47	36	47	47	36	47	47	36	47	47	36	47	47	36	47	47	36	47	46	36	45	44	36	41	39	36	37	36	36	34	32	34	32	0	31	0	0	29	0	0
		10:12	39.8	Non-Exposed	37	49	49	37	49	49	37	49	49	37	49	49	37	49	49	37	49	49	37	49	49	37	49	49	37	49	49	37	48	48	37	44	43	37	41	40	36	38	37	36	36	34
				Exposed	37	49	49	37	49	49	37	49	49	37	49	49	37	49	49	37	49	49	37	47	46	37	45	44	37	41	39	37	37	36	36	34	32	34	32	0	31	0	0	29	0	0
		11:12	42.5	Non-Exposed	39	51	51	39	51	51	39	51	51	39	51	51	39	51	51	39	51	51	39	51	51	39	51	51	39	51	51	39	48	48	39	44	43	38	41	40	37	38	37	37	35	34
				Exposed	39	51	51	39	51	51	39	51	51	39	51	51	39	51	51	39	50	49	39	47	46	39	45	44	39	41	39	39	37	35	36	34	32	34	32	0	31	0	0	29	0	0
		12:12	45	Non-Exposed	41	53	53	41	53	53	41	53	53	41	53	53	41	53	53	41	53	53	41	53	53	41	53	53	41	53	53	41	48	48	40	44	43	39	41	40	39	38	36	38	35	34
				Exposed	41	53	53	41	53	53	41	53	53	41	53	53	41	52	52	41	49	49	41	47	46	41	45	44	41	40	39	39	37	35	36	34	32	34	31	0	31	0	0	29	0	0
	D	2:12	9.5	Non-Exposed	34	41	41	34	41	41	34	41	41	34	41	41	34	41	41	34	41	41	34	41	41	34	41	41	34	41	41	34	41	41	34	41	39	34	38	36	33	36	34	31	33	0
				Exposed	34	41	41	34	41	41	34	41	41	34	41	41	34	41	41	34	41	41	34	41	41	34	41	39	34	38	36	32	35	33	30	32	0	28	0	0	26	0	0	0	0	0
		3:12	14.0	Non-Exposed	32	39	39	32	39	39	32	39	39	32	39	39	32	39	39	32	39	39	32	39	39	32	39	39	32	39	39	32	39	39	32	39	39	32	38	36	32	36	34	31	33	0
				Exposed	32	39	39	32	39	39	32	39	39	32	39	39	32	39	39	32	39	39	32	39	39	32	39	39	32	38	36	32	35	33	30	32	0	28	0	0	0	0	0	0	0	0
		4:12	18.4	Non-Exposed	32	40	40	32	40	40	32	40	40	32	40	40	32	40	40	32	40	40	32	40	40	32	40	40	32	40	40	32	40	40	32	40	39	32	38	36	31	35	34	31	33	0
				Exposed	32	40	40	32	40	40	32	40	40	32	40	40	32	40	40	32	40	40	32	40	40	32	40	39	32	38	36	32	35	33	29	32	0	28	0	0	0	0	0	0	0	0
		5:12	22.6	Non-Exposed	32	40		32	40		32	40		32	40		32	40		32	40		32	40		32	40		32	40		32	40		32	40		32	40		32	39		31	37	
				Exposed	32	40		32	40		32	40		32	40		32	40		32	40		32	40		32	40		32	40		32	39		32	36		32	33		30	0		28	0	
		6:12	26.6	Non-Exposed	32	41		32	41		32	41		32	41		32	41		32	41		32	41		32	41		32	41		32	41		32	41		32	41		32	40		31	37	
				Exposed	32	41		32	41		32	41		32	41		32	41		32	41		32	41		32	41		32	41		32	39		32	36		32	33		30	0		28	0	
		7:12	30.3	Non-Exposed	33	43	43	33	43	43	33	43	43	33	43	43	33	43	43	33	43	43	33	43	43	33	43	43	33	43	43	33	43	42	33	40	39	33	37	35	33	34	33	32	32	30
				Exposed	33	43	43	33	43	43	33	43	43	33	43	43	33	43	43	33	43	43	33	42	41	33	40	39	33	37	35	33	33	32	33	0	0	31	0	0	29	0	0	27	0	0
		8:12	33.7	Non-Exposed	34	45	45	34	45	45	34	45	45	34	45	45	34	45	45	34	45	45	34	45	45	34	45	45	34	45	45	34	43	42	34	40	39	34	37	35	33	34	33	33	32	30
				Exposed	34	45	45	34	45	45	34	45	45	34	45	45	34	45	45	34	45	44	34	42	41	34	40	39	34	36	35	34	33	32	33	0	0	31	0	0	29	0	0	27	0	0
		9:12	36.9	Non-Exposed	36	47	47	36	47	47	36	47	47	36	47	47	36	47	47	36	47	47	36	47	47	36	47	47	36	47	47	36	43	42	35	40	38	35	37	35	34	34	32	34	32	0
				Exposed	36	47	47	36	47	47	36	47	47	36	47	47	36	47	46	36	45	44	36	42	41	36	40	39	36	36	35	36	33	32	33	0	0	30	0	0	29	0	0	27	0	0
		10:12	39.8	Non-Exposed	37	49	49	37	49	49	37	49	49	37	49	49	37	49	49	37	49	49	37	49	49	37	49	49	37	47	47	37	43	42	37	40	38	36	37	35	35	34	32	34	32	0
				Exposed	37	49	49	37	49	49	37	49	49	37	49	49	37	47	46	37	44	43	37	42	41	37	40	39	37	36	35	36	33	31	33	0	0	30	0	0	29	0	0	27	0	0
		11:12	42.5	Non-Exposed	39	51	51	39	51	51	39	51	51	39	51	51	39	51	51	39	51	51	39	51	51	39	51	51	39	47	47	38	43	42	38	40	38	37	37	35	36	34	32	34	32	0
				Exposed	39	51	51	39	51	51	39	51	51	39	50	49	39	47	46	39	44	43	39	42	41	39	40	39	39	36	35	35	33	31	33	0	0	30	0	0	28	0	0	27	0	0
		12:12	45	Non-Exposed	41	53	53	41	53	53	41	53	53	41	53	53	41	53	53	41	53	53	41	53	53	41	52	52	40	47	46	40	43	42	39	40	38	38	37	35	36	34	32	34	32	0
				Exposed	41	53	53	41	53	53	41	53	53	41	50	49	41	47	46	41	44	43	41	42	41	41	40	39	39	36	35	35	33	31	33	0	0	30	0	0	28	0	0	27	0	0

Tamarack 2.3 Rail – Hip Flush-Mount on 30 Foot Maximum Mean Roof Height – Portrait – Panel Length = 96 Inches or Less

Ground Snow Load	Exposure Category	Roof Pitch	Roof Angle	Wind Speed (mph)	95			100			105			110			115			120			125			130			140			150			160			170			180			190		
				Roof Area	1	2	3	1	2	3	1	2	3	1	2	3	1	2	3	1	2	3	1	2	3	1	2	3	1	2	3	1	2	3	1	2	3	1	2	3	1	2	3	1	2	3
45	B	2:12	9.5	Non-Exposed	32	39	39	32	39	39	32	39	39	32	39	39	32	39	39	32	39	39	32	39	39	32	39	39	32	39	39	32	39	39	32	39	39	32	39	39	32	39	39	32	39	39
				Exposed	32	39	39	32	39	39	32	39	39	32	39	39	32	39	39	32	39	39	32	39	39	32	39	39	32	39	39	32	39	39	32	39	39	32	39	39	32	38	36	32	35	34
		3:12	14.0	Non-Exposed	30	37	37	30	37	37	30	37	37	30	37	37	30	37	37	30	37	37	30	37	37	30	37	37	30	37	37	30	37	37	30	37	37	30	37	37	30	37	37	30	37	37
				Exposed	30	37	37	30	37	37	30	37	37	30	37	37	30	37	37	30	37	37	30	37	37	30	37	37	30	37	37	30	37	37	30	37	37	30	37	37	30	37	36	30	35	34
		4:12	18.4	Non-Exposed	30	37	37	30	37	37	30	37	37	30	37	37	30	37	37	30	37	37	30	37	37	30	37	37	30	37	37	30	37	37	30	37	37	30	37	37	30	37	37	30	37	37
				Exposed	30	37	37	30	37	37	30	37	37	30	37	37	30	37	37	30	37	37	30	37	37	30	37	37	30	37	37	30	37	37	30	37	37	30	37	37	30	37	36	30	35	34
		5:12	22.6	Non-Exposed	30	38		30	38		30	38		30	38		30	38		30	38		30	38		30	38		30	38		30	38		30	38		30	38		30	38		30	38	
				Exposed	30	38		30	38		30	38		30	38		30	38		30	38		30	38		30	38		30	38		30	38		30	38		30	38		30	38		30	38	
		6:12	26.6	Non-Exposed	31	39		31	39		31	39		31	39		31	39		31	39		31	39		31	39		31	39		31	39		31	39		31	39		31	39		31	39	
				Exposed	31	39		31	39		31	39		31	39		31	39		31	39		31	39		31	39		31	39		31	39		31	39		31	39		31	39		31	39	
		7:12	30.3	Non-Exposed	31	41	41	31	41	41	31	41	41	31	41	41	31	41	41	31	41	41	31	41	41	31	41	41	31	41	41	31	41	41	31	41	41	31	41	41	31	41	41	31	41	41
				Exposed	31	41	41	31	41	41	31	41	41	31	41	41	31	41	41	31	41	41	31	41	41	31	41	41	31	41	41	31	41	41	31	41	41	31	39	38	31	37	35	31	34	32
		8:12	33.7	Non-Exposed	33	42	42	33	42	42	33	42	42	33	42	42	33	42	42	33	42	42	33	42	42	33	42	42	33	42	42	33	42	42	33	42	42	33	42	42	33	42	42	33	42	42
				Exposed	33	42	42	33	42	42	33	42	42	33	42	42	33	42	42	33	42	42	33	42	42	33	42	42	33	42	42	33	42	42	33	42	41	33	39	38	33	37	35	33	34	32
		9:12	36.9	Non-Exposed	34	44	44	34	44	44	34	44	44	34	44	44	34	44	44	34	44	44	34	44	44	34	44	44	34	44	44	34	44	44	34	44	44	34	44	44	34	44	44	34	44	43
				Exposed	34	44	44	34	44	44	34	44	44	34	44	44	34	44	44	34	44	44	34	44	44	34	44	44	34	44	44	34	44	44	34	43	41	34	39	38	34	37	35	34	34	32
		10:12	39.8	Non-Exposed	35	47	47	35	47	47	35	47	47	35	47	47	35	47	47	35	47	47	35	47	47	35	47	47	35	47	47	35	47	47	35	47	47	35	47	47	35	47	47	35	44	43
				Exposed	35	47	47	35	47	47	35	47	47	35	47	47	35	47	47	35	47	47	35	47	47	35	47	47	35	47	47	35	46	45	35	42	41	35	39	38	35	36	35	35	34	32
		11:12	42.5	Non-Exposed	37	49	49	37	49	49	37	49	49	37	49	49	37	49	49	37	49	49	37	49	49	37	49	49	37	49	49	37	49	49	37	49	49	37	49	49	37	47	47	37	44	43
				Exposed	37	49	49	37	49	49	37	49	49	37	49	49	37	49	49	37	49	49	37	49	49	37	49	49	37	49	49	37	46	45	37	42	41	37	39	38	37	36	35	36	34	32
		12:12	45	Non-Exposed	39	51	51	39	51	51	39	51	51	39	51	51	39	51	51	39	51	51	39	51	51	39	51	51	39	51	51	39	51	51	39	51	51	39	51	51	39	47	47	38	44	43
				Exposed	39	51	51	39	51	51	39	51	51	39	51	51	39	51	51	39	51	51	39	51	51	39	51	51	39	50	50	39	46	45	39	42	41	39	39	38	39	36	35	36	34	32
	C	2:12	9.5	Non-Exposed	32	39	39	32	39	39	32	39	39	32	39	39	32	39	39	32	39	39	32	39	39	32	39	39	32	39	39	32	39	39	32	39	39	32	39	39	32	39	38	32	37	35
				Exposed	32	39	39	32	39	39	32	39	39	32	39	39	32	39	39	32	39	39	32	39	39	32	39	39	32	39	39	32	38	37	32	36	34	30	33	0	29	0	0	27	0	0
		3:12	14.0	Non-Exposed	30	37	37	30	37	37	30	37	37	30	37	37	30	37	37	30	37	37	30	37	37	30	37	37	30	37	37	30	37	37	30	37	37	30	37	37	30	37	37	30	37	35
				Exposed	30	37	37	30	37	37	30	37	37	30	37	37	30	37	37	30	37	37	30	37	37	30	37	37	30	37	37	30	35	34	30	33	0	29	0	0	27	0	0	27	0	0
		4:12	18.4	Non-Exposed	30	37	37	30	37	37	30	37	37	30	37	37	30	37	37	30	37	37	30	37	37	30	37	37	30	37	37	30	37	37	30	37	37	30	37	37	30	37	37	30	37	35
				Exposed	30	37	37	30	37	37	30	37	37	30	37	37	30	37	37	30	37	37	30	37	37	30	37	37	30	37	37	30	37	36	30	35	34	30	33	0	28	0	0	27	0	0
		5:12	22.6	Non-Exposed	30	38		30	38		30	38		30	38		30	38		30	38		30	38		30	38		30	38		30	38		30	38		30	38		30	38		30	38	
				Exposed	30	38		30	38		30	38		30	38		30	38		30	38		30	38		30	38		30	38		30	38		30	37		30	34		30	32				
		6:12	26.6	Non-Exposed	31	39		31	39		31	39		31	39		31	39		31	39		31	39		31	39		31	39		31	39		31	39		31	39		31	39		31	39	
				Exposed	31	39		31	39		31	39		31	39		31	39		31	39		31	39		31	39		31	39		31	39		31	39		31	37		31	34		31	32	
45		7:12	30.3	Non-Exposed	31	41	41	31	41	41	31	41	41	31	41	41	31	41	41	31	41	41	31	41	41	31	41	41	31	41	41	31	41	41	31	41	41	31	41	40	31	38	37	31	36	34
				Exposed	31	41	41	31	41	41	31	41	41	31	41	41	31	41	41	31	41	41	31	41	41	31	41	41	31	41	39	31	37	36	31	34	33	31	32	0	31	0	0	30	0	0
		8:12	33.7	Non-Exposed	33	42	42	33	42	42	33	42	42	33	42	42	33	42	42	33	42	42	33	42	42	33	42	42	33	42	42	33	42	42	33	42	42	33	41	40	33	38	37	32	36	34
				Exposed	33	42	42	33	42	42	33	42	42	33	42	42	33	42	42	33	42	42	33	42	42	33	42	42	33	41	39	33	37	36	33	34	32	33	32	0	32	0	0	30	0	0
		9:12	36.9	Non-Exposed	34	44	44	34	44	44	34	44	44	34	44	44	34	44	44	34	44	44	34	44	44	34	44	44	34	44	44	34	44	44	34	44	44	34	41	40	34	38	37	33	36	34
				Exposed	34	44	44	34	44	44	34	44	44	34	44	44	34	44	44	34	44	44	34	44	44	34	44	44	34	41	39	34	37	36	34	34	32	34	32	0	31	0	0	29	0	0
		10:12	39.8	Non-Exposed	35	47	47	35	47	47	35	47	47	35	47	47	35	47	47	35	47	47	35	47	47	35	47	47	35	47	47	35	47	47	35	44	43	35	41	40	35	38	37	34	36	34
				Exposed	35	47	47	35	47	47	35	47	47	35	47	47	35	47	47	35	47	47	35	47	46	35	45	44	35	41	39	35	37	36	35	34	32	34	32	0	31	0	0	29	0	0
		11:12	42.5	Non-Exposed	37	49	49	37	49	49	37	49	49	37	49	49	37	49	49	37	49	49	37	49	49	37	49	49	37	49	49	37	48	48	37	44	43	37	41	40	36	38	37	35	35	34
				Exposed	37	49	49	37	49	49	37	49	49	37	49	49	37	49	49	37	49	49	37	47	46	37	45	44	37	41	39	37	37	35	36	34	32	34	32	0	31	0	0	29	0	0
		12:12	45	Non-Exposed	39	51	51	39	51	51	39	51	51	39	51	51	39	51	51	39	51	51	39	51	51	39	51	51	39	51	51	39	48	48	39	44	43	38	41	40	37	38	36	37	35	34
				Exposed	39	51	51	39	51	51	39	51	51	39	51	51	39	51	51	39	49	49	39	47	46	39	45	44	39	40	39	39	37	35	36	34	32	34	31	0	31	0	0	29	0	0
	D	2:12	9.5	Non-Exposed	32	39	39	32	39	39	32	39	39	32	39	39	32	39	39	32	39	39	32	39	39	32	39	39	32	39	39	32	39	39	32	39	39	32	38	36	32	36	34	31	33	0
				Exposed	32	39	39	32	39	39	32	39	39	32	39	39	32	39	39	32	39	39	32	39	39	32	39	39	32	38	36	32	35	33	30	32	0	28	0	0	26	0	0	0	0	0
		3:12	14.0	Non-Exposed	30	37	37	30	37	37	30	37	37	30	37	37	30	37	37	30	37	37	30	37	37	30	37	37	30	37	37	30	37	37	30	37	37	30	37	36	30	36	34	30	33	0
				Exposed	30	37	37	30	37	37	30	37	37	30	37	37	30	37	37	30	37	37	30	37	37	30	37	37	30	37	36	30	35	33	30	32	0	28	0	0	0	0	0	0	0	0
		4:12	18.4	Non-Exposed	30	37	37	30	37	37	30	37	37	30	37	37	30	37	37	30	37	37	30	37	37	30	37	37	30	37	37	30	37	37	30	37	37	30	37	36	30	35	34	30	33	0
				Exposed	30	37	37	30	37	37	30	37	37	30	37	37	30	37	37	30	37	37	30	37	37	30	37	37	30	37	36	30	35	33	29	32	0	28	0	0	0	0	0	0	0	0
		5:12	22.6	Non-Exposed	30	38		30	38		30	38		30	38		30	38		30	38		30	38		30	38		30	38		30	38		30	38		30	38		30	38		30	37	
				Exposed	30	38		30	38		30	38		30	38		30	38		30	38		30	38		30	38		30	38		30	38		30	36		30	33		30	0		28	0	
		6:12	26.6	Non-Exposed	31	39		31	39		31	39		31	39		31	39		31	39		31	39		31	39		31	39		31	39		31	39		31	39		31	38		30	37	
				Exposed	31	39		31	39		31	39		31	39		31	39		31	39		31	39		31	39		31	39		31	39		31	36		31	33		30	0		28	0	
		7:12	30.3	Non-Exposed	31	41	41	31	41	41	31	41	41	31	41	41	31	41	41	31	41	41	31	41	41	31	41	41	31	41	41	31	41	41	31	40	39	31	37	35	31	34	33	31	32	30
				Exposed	31	41	41	31	41	41	31	41	41	31	41	41	31	41	41	31	41	41	31	41	41	31	40	39	31	37	35	31	33	32	31	0	0	31	0	0	29	0	0	27	0	0
		8:12	33.7	Non-Exposed	33	42	42	33	42	42	33	42	42	33	42	42	33	42	42	33	42	42	33	42	42	33	42	42	33	42	42	33	42	42	33	40	39	33	37	35	32	34	33	32	32	30
				Exposed	33	42	42	33	42	42	33	42	42	33	42	42	33	42	42	33	42	42	33	42	41	33	40	39	33	36	35	33	33	32	33	0	0	31	0	0	29	0	0	27	0	0
		9:12	36.9	Non-Exposed	34	44	44	34	44	44	34	44	44	34	44	44	34	44	44	34	44	44	34	44	44	34	44	44	34	44	44	34	43	42	34	40	38	34	37	35	33	34	32	32	32	0
				Exposed	34	44	44	34	44	44	34	44	44	34	44	44	34	44	44	34	44	44	34	42	41	34	40	39	34	36	35	34	33	32	33	0	0	30	0	0	29	0	0	27	0	0
		10:12	39.8	Non-Exposed	35	47	47	35	47	47	35	47	47	35	47	47	35	47	47	35	47	47	35	47	47	35	47	47	35	47	47	35	43	42	35	40	38	35	37	35	34	34	32	33	32	0
				Exposed	35	47	47	35	47	47	35	47	47	35	47	47	35	47	46	35	44	43	35	42	41	35	40	39	35	36	35	35	33	31	33	0	0	30	0	0	29	0	0	27	0	0
		11:12	42.5	Non-Exposed	37	49	49	37	49	49	37	49	49	37	49	49	37	49	49	37	49	49	37	49	49	37	49	49	37	47	47	37	43	42	36	40	38	36	37	35	35	34	32	34	32	0
				Exposed	37	49	49	37	49	49	37	49	49	37	49	49	37	47	46	37	44	43	37	42	41	37	40	39	37	36	35	35	33	31	33	0	0	30	0	0	28	0	0	27	0	0
		12:12	45	Non-Exposed	39	51	51	39	51	51	39	51	51	39	51	51	39	51	51	39	51	51	39	51	51	39	51	51	39	47	46	38	43	42	38	40	38	37	37	35	36	34	32	34	32	0
				Exposed	39	51	51	39	51	51	39	51	51	39	50	49	39	47	46	39	44	43	39	42	41	39	40	39	39	36	35	35	33	31	33	0	0	30	0	0	28	0	0	27	0	0

Tamarack 2.3 Rail – Hip Flush-Mount on 30 Foot Maximum Mean Roof Height – Portrait – Panel Length = 96 Inches or Less

Ground Snow Load	Exposure Category	Roof Pitch	Roof Angle	Wind Speed (mph)	95			100			105			110			115			120			125			130			140			150			160			170			180			190		
				Roof Area	1	2	3	1	2	3	1	2	3	1	2	3	1	2	3	1	2	3	1	2	3	1	2	3	1	2	3	1	2	3	1	2	3	1	2	3	1	2	3	1	2	3
50	B	2:12	9.5	Non-Exposed	31	37	37	31	37	37	31	37	37	31	37	37	31	37	37	31	37	37	31	37	37	31	37	37	31	37	37	31	37	37	31	37	37	31	37	37	31	37	37	31	37	37
				Exposed	31	37	37	31	37	37	31	37	37	31	37	37	31	37	37	31	37	37	31	37	37	31	37	37	31	37	37	31	37	37	31	37	37	31	37	37	31	37	36	31	35	34
		3:12	14.0	Non-Exposed	29	35	35	29	35	35	29	35	35	29	35	35	29	35	35	29	35	35	29	35	35	29	35	35	29	35	35	29	35	35	29	35	35	29	35	35	29	35	35	29	35	35
				Exposed	29	35	35	29	35	35	29	35	35	29	35	35	29	35	35	29	35	35	29	35	35	29	35	35	29	35	35	29	35	35	29	35	35	29	35	35	29	35	35	29	35	34
		4:12	18.4	Non-Exposed	28	35	35	28	35	35	28	35	35	28	35	35	28	35	35	28	35	35	28	35	35	28	35	35	28	35	35	28	35	35	28	35	35	28	35	35	28	35	35	28	35	35
				Exposed	28	35	35	28	35	35	28	35	35	28	35	35	28	35	35	28	35	35	28	35	35	28	35	35	28	35	35	28	35	35	28	35	35	28	35	35	28	35	35	28	35	34
		5:12	22.6	Non-Exposed	29	36		29	36		29	36		29	36		29	36		29	36		29	36		29	36		29	36		29	36		29	36		29	36		29	36		29	36	
				Exposed	29	36		29	36		29	36		29	36		29	36		29	36		29	36		29	36		29	36		29	36		29	36		29	36		29	36		29	36	
		6:12	26.6	Non-Exposed	29	37		29	37		29	37		29	37		29	37		29	37		29	37		29	37		29	37		29	37		29	37		29	37		29	37		29	37	
				Exposed	29	37		29	37		29	37		29	37		29	37		29	37		29	37		29	37		29	37		29	37		29	37		29	37		29	37		29	37	
		7:12	30.3	Non-Exposed	30	39	39	30	39	39	30	39	39	30	39	39	30	39	39	30	39	39	30	39	39	30	39	39	30	39	39	30	39	39	30	39	39	30	39	39	30	39	39	30	39	39
				Exposed	30	39	39	30	39	39	30	39	39	30	39	39	30	39	39	30	39	39	30	39	39	30	39	39	30	39	39	30	39	38	30	37	35	30	34	32						
		8:12	33.7	Non-Exposed	31	40	40	31	40	40	31	40	40	31	40	40	31	40	40	31	40	40	31	40	40	31	40	40	31	40	40	31	40	40	31	40	40	31	40	40	31	40	40	31	40	40
				Exposed	31	40	40	31	40	40	31	40	40	31	40	40	31	40	40	31	40	40	31	40	40	31	40	40	31	40	40	31	40	40	31	39	38	31	37	35	31	34	32			
		9:12	36.9	Non-Exposed	32	42	42	32	42	42	32	42	42	32	42	42	32	42	42	32	42	42	32	42	42	32	42	42	32	42	42	32	42	42	32	42	42	32	42	42	32	42	42	32	42	42
				Exposed	32	42	42	32	42	42	32	42	42	32	42	42	32	42	42	32	42	42	32	42	42	32	42	42	32	42	42	32	42	41	32	39	38	32	37	35	32	34	32			
		10:12	39.8	Non-Exposed	34	44	44	34	44	44	34	44	44	34	44	44	34	44	44	34	44	44	34	44	44	34	44	44	34	44	44	34	44	44	34	44	44	34	44	44	34	44	43	34	44	43
				Exposed	34	44	44	34	44	44	34	44	44	34	44	44	34	44	44	34	44	44	34	44	44	34	44	44	34	44	44	34	42	41	34	39	38	34	36	35	34	34	32			
		11:12	42.5	Non-Exposed	35	47	47	35	47	47	35	47	47	35	47	47	35	47	47	35	47	47	35	47	47	35	47	47	35	47	47	35	47	47	35	47	47	35	47	47	35	44	43	35	44	43
				Exposed	35	47	47	35	47	47	35	47	47	35	47	47	35	47	47	35	47	47	35	47	47	35	47	47	35	47	47	35	46	45	35	42	41	35	39	38	35	36	35	35	34	32
		12:12	45	Non-Exposed	37	49	49	37	49	49	37	49	49	37	49	49	37	49	49	37	49	49	37	49	49	37	49	49	37	49	49	37	49	49	37	49	49	37	49	49	37	47	47	37	44	43
				Exposed	37	49	49	37	49	49	37	49	49	37	49	49	37	49	49	37	49	49	37	49	49	37	49	49	37	49	49	37	46	45	37	42	41	37	39	38	37	36	35	36	34	32
	C	2:12	9.5	Non-Exposed	31	37	37	31	37	37	31	37	37	31	37	37	31	37	37	31	37	37	31	37	37	31	37	37	31	37	37	31	37	37	31	37	37	31	37	37	31	37	37	31	37	35
				Exposed	31	37	37	31	37	37	31	37	37	31	37	37	31	37	37	31	37	37	31	37	37	31	37	37	31	37	37	31	36	34	30	33	0	29	0	0	27	0	0			
		3:12	14.0	Non-Exposed	29	35	35	29	35	35	29	35	35	29	35	35	29	35	35	29	35	35	29	35	35	29	35	35	29	35	35	29	35	35	29	35	35	29	35	35	29	35	35	29	35	35
				Exposed	29	35	35	29	35	35	29	35	35	29	35	35	29	35	35	29	35	35	29	35	35	29	35	35	29	35	35	29	35	34	29	33	0	29	0	0	27	0	0			
		4:12	18.4	Non-Exposed	28	35	35	28	35	35	28	35	35	28	35	35	28	35	35	28	35	35	28	35	35	28	35	35	28	35	35	28	35	35	28	35	35	28	35	35	28	35	35	28	35	35
				Exposed	28	35	35	28	35	35	28	35	35	28	35	35	28	35	35	28	35	35	28	35	35	28	35	35	28	35	35	28	35	34	28	33	0	28	0	0	27	0	0			
		5:12	22.6	Non-Exposed	29	36		29	36		29	36		29	36		29	36		29	36		29	36		29	36		29	36		29	36		29	36		29	36		29	36		29	36	
				Exposed	29	36		29	36		29	36		29	36		29	36		29	36		29	36		29	36		29	36		29	36		29	36		29	36		29	34		29	32	
		6:12	26.6	Non-Exposed	29	37		29	37		29	37		29	37		29	37		29	37		29	37		29	37		29	37		29	37		29	37		29	37		29	37		29	37	
				Exposed	29	37		29	37		29	37		29	37		29	37		29	37		29	37		29	37		29	37		29	37		29	37		29	37		29	34		29	32	
		7:12	30.3	Non-Exposed	30	39	39	30	39	39	30	39	39	30	39	39	30	39	39	30	39	39	30	39	39	30	39	39	30	39	39	30	39	39	30	39	39	30	39	39	30	38	37	30	36	34
				Exposed	30	39	39	30	39	39	30	39	39	30	39	39	30	39	39	30	39	39	30	39	39	30	39	39	30	39	39	30	37	36	30	34	33	30	32	0	30	0	0	30	0	0
		8:12	33.7	Non-Exposed	31	40	40	31	40	40	31	40	40	31	40	40	31	40	40	31	40	40	31	40	40	31	40	40	31	40	40	31	40	40	31	40	40	31	40	40	31	38	37	31	36	34
				Exposed	31	40	40	31	40	40	31	40	40	31	40	40	31	40	40	31	40	40	31	40	40	31	40	40	31	40	39	31	37	36	31	34	32	31	32	0	30	0	0	30	0	0
		9:12	36.9	Non-Exposed	32	42	42	32	42	42	32	42	42	32	42	42	32	42	42	32	42	42	32	42	42	32	42	42	32	42	42	32	42	42	32	42	42	32	41	40	32	38	37	32	36	34
				Exposed	32	42	42	32	42	42	32	42	42	32	42	42	32	42	42	32	42	42	32	42	42	32	42	42	32	41	39	32	37	36	32	34	32	32	32	0	31	0	0	29	0	0
		10:12	39.8	Non-Exposed	34	44	44	34	44	44	34	44	44	34	44	44	34	44	44	34	44	44	34	44	44	34	44	44	34	44	44	34	44	44	34	44	43	34	41	40	34	38	37	33	36	34
				Exposed	34	44	44	34	44	44	34	44	44	34	44	44	34	44	44	34	44	44	34	44	44	34	44	44	34	41	39	34	37	36	34	34	32	34	32	0	31	0	0	29	0	0
		11:12	42.5	Non-Exposed	35	47	47	35	47	47	35	47	47	35	47	47	35	47	47	35	47	47	35	47	47	35	47	47	35	47	47	35	47	47	35	44	43	35	41	40	35	38	37	34	35	34
				Exposed	35	47	47	35	47	47	35	47	47	35	47	47	35	47	47	35	47	47	35	47	46	35	45	44	35	41	39	35	37	35	35	34	32	34	32	0	31	0	0	29	0	0
		12:12	45	Non-Exposed	37	49	49	37	49	49	37	49	49	37	49	49	37	49	49	37	49	49	37	49	49	37	49	49	37	49	49	37	48	48	37	44	43	37	41	40	36	38	36	35	35	34
				Exposed	37	49	49	37	49	49	37	49	49	37	49	49	37	49	49	37	49	49	37	47	46	37	45	44	37	40	39	37	37	35	36	34	32	34	31	0	31	0	0	29	0	0
	D	2:12	9.5	Non-Exposed	31	37	37	31	37	37	31	37	37	31	37	37	31	37	37	31	37	37	31	37	37	31	37	37	31	37	37	31	37	37	31	37	37	31	37	36	31	36	34	30	33	0
				Exposed	31	37	37	31	37	37	31	37	37	31	37	37	31	37	37	31	37	37	31	37	37	31	37	37	31	37	36	31	35	33	30	32	0	28	0	0	26	0	0	0	0	0
		3:12	14.0	Non-Exposed	29	35	35	29	35	35	29	35	35	29	35	35	29	35	35	29	35	35	29	35	35	29	35	35	29	35	35	29	35	35	29	35	35	29	35	35	29	35	34	29	33	0
				Exposed	29	35	35	29	35	35	29	35	35	29	35	35	29	35	35	29	35	35	29	35	35	29	35	35	29	35	35	29	35	33	29	32	0	28	0	0	0	0	0	0	0	0
		4:12	18.4	Non-Exposed	28	35	35	28	35	35	28	35	35	28	35	35	28	35	35	28	35	35	28	35	35	28	35	35	28	35	35	28	35	35	28	35	35	28	35	35	28	35	34	28	33	0
				Exposed	28	35	35	28	35	35	28	35	35	28	35	35	28	35	35	28	35	35	28	35	35	28	35	35	28	35	35	28	35	33	28	32	0	28	0	0	0	0	0	0	0	0
		5:12	22.6	Non-Exposed	29	36		29	36		29	36		29	36		29	36		29	36		29	36		29	36		29	36		29	36		29	36		29	36		29	36		29	36	
				Exposed	29	36		29	36		29	36		29	36		29	36		29	36		29	36		29	36		29	36		29	36		29	36		29	33		29	0		28	0	
		6:12	26.6	Non-Exposed	29	37		29	37		29	37		29	37		29	37		29	37		29	37		29	37		29	37		29	37		29	37		29	37		29	37		29	36	
				Exposed	29	37		29	37		29	37		29	37		29	37		29	37		29	37		29	37		29	37		29	37		29	36		29	33		29	0		28	0	
		7:12	30.3	Non-Exposed	30	39	39	30	39	39	30	39	39	30	39	39	30	39	39	30	39	39	30	39	39	30	39	39	30	39	39	30	39	39	30	39	39	30	37	35	30	34	33	30	32	30
				Exposed	30	39	39	30	39	39	30	39	39	30	39	39	30	39	39	30	39	39	30	39	39	30	39	39	30	37	35	30	33	32	30	0	0	30	0	0	29	0	0	27	0	0
		8:12	33.7	Non-Exposed	31	40	40	31	40	40	31	40	40	31	40	40	31	40	40	31	40	40	31	40	40	31	40	40	31	40	40	31	40	40	31	40	39	31	37	35	31	34	33	30	32	30
				Exposed	31	40	40	31	40	40	31	40	40	31	40	40	31	40	40	31	40	40	31	40	40	31	40	39	31	36	35	31	33	32	31	0	0	31	0	0	29	0	0	27	0	0
		9:12	36.9	Non-Exposed	32	42	42	32	42	42	32	42	42	32	42	42	32	42	42	32	42	42	32	42	42	32	42	42	32	42	42	32	42	42	32	40	38	32	37	35	32	34	32	31	32	0
				Exposed	32	42	42	32	42	42	32	42	42	32	42	42	32	42	42	32	42	42	32	42	41	32	40	39	32	36	35	32	33	32	32	0	0	30	0	0	29	0	0	27	0	0
		10:12	39.8	Non-Exposed	34	44	44	34	44	44	34	44	44	34	44	44	34	44	44	34	44	44	34	44	44	34	44	44	34	44	44	34	43	42	34	40	38	33	37	35	33	34	32	32	32	0
				Exposed	34	44	44	34	44	44	34	44	44	34	44	44	34	44	44	34	44	43	34	42	41	34	40	39	34	36	35	34	33	31	33	0	0	30	0	0	29	0	0	27	0	0
		11:12	42.5	Non-Exposed	35	47	47	35	47	47	35	47	47	35	47	47	35	47	47	35	47	47	35	47	47	35	47	47	35	47	47	35	43	42	35	40	38	35	37	35	34	34	32	33	32	0
				Exposed	35	47	47	35	47	47	35	47	47	35	47	47	35	47	46	35	44	43	35	42	41	35	40	39	35	36	35	35	33	31	33	0	0	30	0	0	28	0	0	27	0	0
		12:12	45	Non-Exposed	37	49	49	37	49	49	37	49	49	37	49	49	37	49	49	37	49	49	37	49	49	37	49	49	37	47	46	37	43	42	36	40	38	36	37	35	35	34	32	34	32	0
				Exposed	37	49	49	37	49	49	37	49	49	37	49	49	37	47	46	37	44	43	37	42	41	37	40	39	37	36	35	35	33	31	33	0	0	30	0	0	28	0	0	27	0	0

Tamarack 2.3 Rail – Hip Flush-Mount on 30 Foot Maximum Mean Roof Height – Portrait – Panel Length = 96 Inches or Less

Ground Snow Load	Exposure Category	Roof Pitch	Roof Angle	Wind Speed (mph)	95			100			105			110			115			120			125			130			140			150			160			170			180			190		
				Roof Area	1	2	3	1	2	3	1	2	3	1	2	3	1	2	3	1	2	3	1	2	3	1	2	3	1	2	3	1	2	3	1	2	3	1	2	3	1	2	3	1	2	3
55	B	2:12	9.5	Non-Exposed	29	35	35	29	35	35	29	35	35	29	35	35	29	35	35	29	35	35	29	35	35	29	35	35	29	35	35	29	35	35	29	35	35	29	35	35	29	35	35	29	35	35
				Exposed	29	35	35	29	35	35	29	35	35	29	35	35	29	35	35	29	35	35	29	35	35	29	35	35	29	35	35	29	35	35	29	35	35	29	35	35	29	35	35	29	35	34
		3:12	14.0	Non-Exposed	27	34	34	27	34	34	27	34	34	27	34	34	27	34	34	27	34	34	27	34	34	27	34	34	27	34	34	27	34	34	27	34	34	27	34	34	27	34	34	27	34	34
				Exposed	27	34	34	27	34	34	27	34	34	27	34	34	27	34	34	27	34	34	27	34	34	27	34	34	27	34	34	27	34	34	27	34	34	27	34	34	27	34	34	27	34	34
		4:12	18.4	Non-Exposed	27	34	34	27	34	34	27	34	34	27	34	34	27	34	34	27	34	34	27	34	34	27	34	34	27	34	34	27	34	34	27	34	34	27	34	34	27	34	34	27	34	34
				Exposed	27	34	34	27	34	34	27	34	34	27	34	34	27	34	34	27	34	34	27	34	34	27	34	34	27	34	34	27	34	34	27	34	34	27	34	34	27	34	34	27	34	34
		5:12	22.6	Non-Exposed	27	35		27	35		27	35		27	35		27	35		27	35		27	35		27	35		27	35		27	35		27	35		27	35		27	35		27	35	
				Exposed	27	35		27	35		27	35		27	35		27	35		27	35		27	35		27	35		27	35		27	35		27	35		27	35		27	35		27	35	
		6:12	26.6	Non-Exposed	28	36		28	36		28	36		28	36		28	36		28	36		28	36		28	36		28	36		28	36		28	36		28	36		28	36		28	36	
				Exposed	28	36		28	36		28	36		28	36		28	36		28	36		28	36		28	36		28	36		28	36		28	36		28	36		28	36		28	36	
		7:12	30.3	Non-Exposed	29	37	37	29	37	37	29	37	37	29	37	37	29	37	37	29	37	37	29	37	37	29	37	37	29	37	37	29	37	37	29	37	37	29	37	37	29	37	37	29	37	37
				Exposed	29	37	37	29	37	37	29	37	37	29	37	37	29	37	37	29	37	37	29	37	37	29	37	37	29	37	37	29	37	37	29	37	37	29	37	37	29	37	35	29	34	32
		8:12	33.7	Non-Exposed	30	39	39	30	39	39	30	39	39	30	39	39	30	39	39	30	39	39	30	39	39	30	39	39	30	39	39	30	39	39	30	39	39	30	39	39	30	39	39	30	39	39
				Exposed	30	39	39	30	39	39	30	39	39	30	39	39	30	39	39	30	39	39	30	39	39	30	39	39	30	39	39	30	39	38	30	37	35	30	34	32	30	34	32	30	34	32
		9:12	36.9	Non-Exposed	31	40	40	31	40	40	31	40	40	31	40	40	31	40	40	31	40	40	31	40	40	31	40	40	31	40	40	31	40	40	31	40	40	31	40	40	31	40	40	31	40	40
				Exposed	31	40	40	31	40	40	31	40	40	31	40	40	31	40	40	31	40	40	31	40	40	31	40	40	31	40	40	31	40	38	31	37	35	31	34	32	31	34	32	31	34	32
		10:12	39.8	Non-Exposed	32	42	42	32	42	42	32	42	42	32	42	42	32	42	42	32	42	42	32	42	42	32	42	42	32	42	42	32	42	42	32	42	42	32	42	42	32	42	42	32	42	42
				Exposed	32	42	42	32	42	42	32	42	42	32	42	42	32	42	42	32	42	42	32	42	42	32	42	42	32	42	42	32	42	41	32	39	38	32	36	35	32	34	32	32	34	32
		11:12	42.5	Non-Exposed	34	45	45	34	45	45	34	45	45	34	45	45	34	45	45	34	45	45	34	45	45	34	45	45	34	45	45	34	45	45	34	45	45	34	45	45	34	44	43	34	44	43
				Exposed	34	45	45	34	45	45	34	45	45	34	45	45	34	45	45	34	45	45	34	45	45	34	45	45	34	45	45	34	42	41	34	39	38	34	36	35	34	34	32	34	34	32
		12:12	45	Non-Exposed	35	47	47	35	47	47	35	47	47	35	47	47	35	47	47	35	47	47	35	47	47	35	47	47	35	47	47	35	47	47	35	47	47	35	47	47	35	44	43	35	44	43
				Exposed	35	47	47	35	47	47	35	47	47	35	47	47	35	47	47	35	47	47	35	47	47	35	47	47	35	47	46	35	42	41	35	39	38	35	36	35	35	34	32	35	34	32
	C	2:12	9.5	Non-Exposed	29	35	35	29	35	35	29	35	35	29	35	35	29	35	35	29	35	35	29	35	35	29	35	35	29	35	35	29	35	35	29	35	35	29	35	35	29	35	35	29	35	35
				Exposed	29	35	35	29	35	35	29	35	35	29	35	35	29	35	35	29	35	35	29	35	35	29	35	35	29	35	35	29	35	34	29	33	0	29	0	0	27	0	0	27	0	0
		3:12	14.0	Non-Exposed	27	34	34	27	34	34	27	34	34	27	34	34	27	34	34	27	34	34	27	34	34	27	34	34	27	34	34	27	34	34	27	34	34	27	34	34	27	34	34	27	34	34
				Exposed	27	34	34	27	34	34	27	34	34	27	34	34	27	34	34	27	34	34	27	34	34	27	34	34	27	34	34	27	34	34	27	33	0	27	0	0	27	0	0	27	0	0
		4:12	18.4	Non-Exposed	27	34	34	27	34	34	27	34	34	27	34	34	27	34	34	27	34	34	27	34	34	27	34	34	27	34	34	27	34	34	27	34	34	27	34	34	27	34	34	27	34	34
				Exposed	27	34	34	27	34	34	27	34	34	27	34	34	27	34	34	27	34	34	27	34	34	27	34	34	27	34	34	27	34	34	27	33	0	27	0	0	27	0	0	27	0	0
		5:12	22.6	Non-Exposed	27	35		27	35		27	35		27	35		27	35		27	35		27	35		27	35		27	35		27	35		27	35		27	35		27	35		27	35	
				Exposed	27	35		27	35		27	35		27	35		27	35		27	35		27	35		27	35		27	35		27	35		27	35		27	34		27	32				
		6:12	26.6	Non-Exposed	28	36		28	36		28	36		28	36		28	36		28	36		28	36		28	36		28	36		28	36		28	36		28	36		28	36		28	36	
				Exposed	28	36		28	36		28	36		28	36		28	36		28	36		28	36		28	36		28	36		28	36		28	36		28	34		28	32				
		7:12	30.3	Non-Exposed	29	37	37	29	37	37	29	37	37	29	37	37	29	37	37	29	37	37	29	37	37	29	37	37	29	37	37	29	37	37	29	37	37	29	37	37	29	37	37	29	36	34
				Exposed	29	37	37	29	37	37	29	37	37	29	37	37	29	37	37	29	37	37	29	37	37	29	37	37	29	37	37	29	34	33	29	32	0	29	0	0	29	0	0	29	0	0
		8:12	33.7	Non-Exposed	30	39	39	30	39	39	30	39	39	30	39	39	30	39	39	30	39	39	30	39	39	30	39	39	30	39	39	30	39	39	30	39	39	30	38	37	30	36	34	30	36	34
				Exposed	30	39	39	30	39	39	30	39	39	30	39	39	30	39	39	30	39	39	30	39	39	30	39	39	30	39	39	30	34	32	30	32	0	30	0	0	30	0	0	30	0	0
		9:12	36.9	Non-Exposed	31	40	40	31	40	40	31	40	40	31	40	40	31	40	40	31	40	40	31	40	40	31	40	40	31	40	40	31	40	40	31	40	40	31	38	37	31	36	34	31	36	34
				Exposed	31	40	40	31	40	40	31	40	40	31	40	40	31	40	40	31	40	40	31	40	40	31	40	40	31	40	39	31	37	36	31	34	32	31	32	0	31	0	0	29	0	0
		10:12	39.8	Non-Exposed	32	42	42	32	42	42	32	42	42	32	42	42	32	42	42	32	42	42	32	42	42	32	42	42	32	42	42	32	42	42	32	42	42	32	41	40	32	38	37	32	36	34
				Exposed	32	42	42	32	42	42	32	42	42	32	42	42	32	42	42	32	42	42	32	42	42	32	42	42	32	41	39	32	37	36	32	34	32	32	32	0	31	0	0	29	0	0
		11:12	42.5	Non-Exposed	34	45	45	34	45	45	34	45	45	34	45	45	34	45	45	34	45	45	34	45	45	34	45	45	34	45	45	34	45	45	34	44	43	34	41	40	34	38	37	33	35	34
				Exposed	34	45	45	34	45	45	34	45	45	34	45	45	34	45	45	34	45	45	34	45	45	34	45	44	34	41	39	34	37	35	34	34	32	34	32	0	31	0	0	29	0	0
		12:12	45	Non-Exposed	35	47	47	35	47	47	35	47	47	35	47	47	35	47	47	35	47	47	35	47	47	35	47	47	35	47	47	35	47	47	35	44	43	35	41	40	35	38	36	34	35	34
				Exposed	35	47	47	35	47	47	35	47	47	35	47	47	35	47	47	35	47	47	35	47	46	35	45	44	35	40	39	35	37	35	35	34	32	34	31	0	31	0	0	29	0	0
	D	2:12	9.5	Non-Exposed	29	35	35	29	35	35	29	35	35	29	35	35	29	35	35	29	35	35	29	35	35	29	35	35	29	35	35	29	35	35	29	35	35	29	35	35	29	35	34	29	33	0
				Exposed	29	35	35	29	35	35	29	35	35	29	35	35	29	35	35	29	35	35	29	35	35	29	35	35	29	35	35	29	35	33	29	32	0	28	0	0	26	0	0	0	0	0
		3:12	14.0	Non-Exposed	27	34	34	27	34	34	27	34	34	27	34	34	27	34	34	27	34	34	27	34	34	27	34	34	27	34	34	27	34	34	27	34	34	27	34	34	27	34	34	27	33	0
				Exposed	27	34	34	27	34	34	27	34	34	27	34	34	27	34	34	27	34	34	27	34	34	27	34	34	27	34	34	27	34	33	27	32	0	27	0	0	0	0	0	0	0	0
		4:12	18.4	Non-Exposed	27	34	34	27	34	34	27	34	34	27	34	34	27	34	34	27	34	34	27	34	34	27	34	34	27	34	34	27	34	34	27	34	34	27	34	34	27	34	34	27	33	0
				Exposed	27	34	34	27	34	34	27	34	34	27	34	34	27	34	34	27	34	34	27	34	34	27	34	34	27	34	34	27	34	33	27	32	0	27	0	0	0	0	0	0	0	0
		5:12	22.6	Non-Exposed	27	35		27	35		27	35		27	35		27	35		27	35		27	35		27	35		27	35		27	35		27	35		27	35		27	35		27	34	
				Exposed	27	35		27	35		27	35		27	35		27	35		27	35		27	35		27	35		27	35		27	35		27	33		27	0		27	0				
		6:12	26.6	Non-Exposed	28	36		28	36		28	36		28	36		28	36		28	36		28	36		28	36		28	36		28	36		28	36		28	36		28	36		28	35	
				Exposed	28	36		28	36		28	36		28	36		28	36		28	36		28	36		28	36		28	36		28	36		28	33		28	0		28	0				
		7:12	30.3	Non-Exposed	29	37	37	29	37	37	29	37	37	29	37	37	29	37	37	29	37	37	29	37	37	29	37	37	29	37	37	29	37	37	29	37	37	29	37	35	29	34	33	29	32	30
				Exposed	29	37	37	29	37	37	29	37	37	29	37	37	29	37	37	29	37	37	29	37	37	29	37	37	29	37	35	29	33	32	29	0	0	29	0	0	29	0	0	27	0	0
		8:12	33.7	Non-Exposed	30	39	39	30	39	39	30	39	39	30	39	39	30	39	39	30	39	39	30	39	39	30	39	39	30	39	39	30	39	39	30	39	39	30	37	35	30	34	33	29	32	30
				Exposed	30	39	39	30	39	39	30	39	39	30	39	39	30	39	39	30	39	39	30	39	39	30	39	39	30	36	35	30	33	32	30	0	0	30	0	0	29	0	0	27	0	0
		9:12	36.9	Non-Exposed	31	40	40	31	40	40	31	40	40	31	40	40	31	40	40	31	40	40	31	40	40	31	40	40	31	40	40	31	40	40	31	40	38	31	37	35	31	34	32	30	32	0
				Exposed	31	40	40	31	40	40	31	40	40	31	40	40	31	40	40	31	40	40	31	40	40	31	40	39	31	36	35	31	33	32	31	0	0	30	0	0	29	0	0	27	0	0
		10:12	39.8	Non-Exposed	32	42	42	32	42	42	32	42	42	32	42	42	32	42	42	32	42	42	32	42	42	32	42	42	32	42	42	32	42	42	32	40	38	32	37	35	32	34	32	31	32	0
				Exposed	32	42	42	32	42	42	32	42	42	32	42	42	32	42	42	32	42	42	32	42	41	32	40	39	32	36	35	32	33	31	32	0	0	30	0	0	29	0	0	27	0	0
		11:12	42.5	Non-Exposed	34	45	45	34	45	45	34	45	45	34	45	45	34	45	45	34	45	45	34	45	45	34	45	45	34	45	45	34	43	42	34	40	38	33	37	35	33	34	32	32	32	0
				Exposed	34	45	45	34	45	45	34	45	45	34	45	45	34	45	45	34	44	43	34	42	41	34	40	39	34	36	35	34	33	31	33	0	0	30	0	0	28	0	0	27	0	0
		12:12	45	Non-Exposed	35	47	47	35	47	47	35	47	47	35	47	47	35	47	47	35	47	47	35	47	47	35	47	47	35	47	46	35	43	42	35	40	38	35	37	35	34	34	32	33	32	0
				Exposed	35	47	47	35	47	47	35	47	47	35	47	47	35	47	46	35	44	43	35	42	41	35	40	39	35	36	35	35	33	31	33	0	0	30	0	0	28	0	0	27	0	0

Tamarack 2.3 Rail – Hip Flush-Mount on 30 Foot Maximum Mean Roof Height – Portrait – Panel Length = 96 Inches or Less

Ground Snow Load	Exposure Category	Roof Pitch	Roof Angle	Wind Speed (mph)	95			100			105			110			115			120			125			130			140			150			160			170			180			190		
				Roof Area	1	2	3	1	2	3	1	2	3	1	2	3	1	2	3	1	2	3	1	2	3	1	2	3	1	2	3	1	2	3	1	2	3	1	2	3	1	2	3	1	2	3
60	B	2:12	9.5	Non-Exposed	28	34	34	28	34	34	28	34	34	28	34	34	28	34	34	28	34	34	28	34	34	28	34	34	28	34	34	28	34	34	28	34	34	28	34	34	28	34	34	28	34	34
				Exposed	28	34	34	28	34	34	28	34	34	28	34	34	28	34	34	28	34	34	28	34	34	28	34	34	28	34	34	28	34	34	28	34	34	28	34	34	28	34	34	28	34	34
		3:12	14.0	Non-Exposed	26	32	32	26	32	32	26	32	32	26	32	32	26	32	32	26	32	32	26	32	32	26	32	32	26	32	32	26	32	32	26	32	32	26	32	32	26	32	32	26	32	32
				Exposed	26	32	32	26	32	32	26	32	32	26	32	32	26	32	32	26	32	32	26	32	32	26	32	32	26	32	32	26	32	32	26	32	32	26	32	32	26	32	32	26	32	32
		4:12	18.4	Non-Exposed	26	32	32	26	32	32	26	32	32	26	32	32	26	32	32	26	32	32	26	32	32	26	32	32	26	32	32	26	32	32	26	32	32	26	32	32	26	32	32	26	32	32
				Exposed	26	32	32	26	32	32	26	32	32	26	32	32	26	32	32	26	32	32	26	32	32	26	32	32	26	32	32	26	32	32	26	32	32	26	32	32	26	32	32	26	32	32
		5:12	22.6	Non-Exposed	26	33		26	33		26	33		26	33		26	33		26	33		26	33		26	33		26	33		26	33		26	33		26	33		26	33		26	33	
				Exposed	26	33		26	33		26	33		26	33		26	33		26	33		26	33		26	33		26	33		26	33		26	33		26	33		26	33		26	33	
		6:12	26.6	Non-Exposed	27	34		27	34		27	34		27	34		27	34		27	34		27	34		27	34		27	34		27	34		27	34		27	34		27	34		27	34	
				Exposed	27	34		27	34		27	34		27	34		27	34		27	34		27	34		27	34		27	34		27	34		27	34		27	34		27	34		27	34	
		7:12	30.3	Non-Exposed	27	35	35	27	35	35	27	35	35	27	35	35	27	35	35	27	35	35	27	35	35	27	35	35	27	35	35	27	35	35	27	35	35	27	35	35	27	35	35	27	35	35
				Exposed	27	35	35	27	35	35	27	35	35	27	35	35	27	35	35	27	35	35	27	35	35	27	35	35	27	35	35	27	35	35	27	35	35	27	35	35	27	35	35	27	34	32
		8:12	33.7	Non-Exposed	28	37	37	28	37	37	28	37	37	28	37	37	28	37	37	28	37	37	28	37	37	28	37	37	28	37	37	28	37	37	28	37	37	28	37	37	28	37	37	28	37	37
				Exposed	28	37	37	28	37	37	28	37	37	28	37	37	28	37	37	28	37	37	28	37	37	28	37	37	28	37	37	28	37	37	28	37	37	28	37	37	28	37	35	28	34	32
		9:12	36.9	Non-Exposed	30	39	39	30	39	39	30	39	39	30	39	39	30	39	39	30	39	39	30	39	39	30	39	39	30	39	39	30	39	39	30	39	39	30	39	39	30	39	39	30	39	39
				Exposed	30	39	39	30	39	39	30	39	39	30	39	39	30	39	39	30	39	39	30	39	39	30	39	39	30	39	39	30	39	39	30	39	39	30	39	38	30	37	35	30	34	32
		10:12	39.8	Non-Exposed	31	41	41	31	41	41	31	41	41	31	41	41	31	41	41	31	41	41	31	41	41	31	41	41	31	41	41	31	41	41	31	41	41	31	41	41	31	41	41	31	41	41
				Exposed	31	41	41	31	41	41	31	41	41	31	41	41	31	41	41	31	41	41	31	41	41	31	41	41	31	41	41	31	41	41	31	41	41	31	39	38	31	36	35	31	34	32
		11:12	42.5	Non-Exposed	32	43	43	32	43	43	32	43	43	32	43	43	32	43	43	32	43	43	32	43	43	32	43	43	32	43	43	32	43	43	32	43	43	32	43	43	32	43	43	32	43	43
				Exposed	32	43	43	32	43	43	32	43	43	32	43	43	32	43	43	32	43	43	32	43	43	32	43	43	32	43	43	32	43	43	32	42	41	32	39	38	32	36	35	32	34	32
		12:12	45	Non-Exposed	34	45	45	34	45	45	34	45	45	34	45	45	34	45	45	34	45	45	34	45	45	34	45	45	34	45	45	34	45	45	34	45	45	34	45	45	34	45	45	34	44	43
				Exposed	34	45	45	34	45	45	34	45	45	34	45	45	34	45	45	34	45	45	34	45	45	34	45	45	34	45	45	34	45	45	34	42	41	34	39	38	34	36	35	34	34	32
	C	2:12	9.5	Non-Exposed	28	34	34	28	34	34	28	34	34	28	34	34	28	34	34	28	34	34	28	34	34	28	34	34	28	34	34	28	34	34	28	34	34	28	34	34	28	34	34	28	34	34
				Exposed	28	34	34	28	34	34	28	34	34	28	34	34	28	34	34	28	34	34	28	34	34	28	34	34	28	34	34	28	34	34	28	34	34	28	33	0	28	0	0	27	0	0
		3:12	14.0	Non-Exposed	26	32	32	26	32	32	26	32	32	26	32	32	26	32	32	26	32	32	26	32	32	26	32	32	26	32	32	26	32	32	26	32	32	26	32	32	26	32	32	26	32	32
				Exposed	26	32	32	26	32	32	26	32	32	26	32	32	26	32	32	26	32	32	26	32	32	26	32	32	26	32	32	26	32	32	26	32	32	26	32	0	26	0	0	26	0	0
		4:12	18.4	Non-Exposed	26	32	32	26	32	32	26	32	32	26	32	32	26	32	32	26	32	32	26	32	32	26	32	32	26	32	32	26	32	32	26	32	32	26	32	32	26	32	32	26	32	32
				Exposed	26	32	32	26	32	32	26	32	32	26	32	32	26	32	32	26	32	32	26	32	32	26	32	32	26	32	32	26	32	32	26	32	32	26	32	0	26	0	0	26	0	0
		5:12	22.6	Non-Exposed	26	33		26	33		26	33		26	33		26	33		26	33		26	33		26	33		26	33		26	33		26	33		26	33		26	33		26	33	
				Exposed	26	33		26	33		26	33		26	33		26	33		26	33		26	33		26	33		26	33		26	33		26	33		26	33		26	32				
		6:12	26.6	Non-Exposed	27	34		27	34		27	34		27	34		27	34		27	34		27	34		27	34		27	34		27	34		27	34		27	34		27	34		27	34	
				Exposed	27	34		27	34		27	34		27	34		27	34		27	34		27	34		27	34		27	34		27	34		27	34		27	34		27	34		27	32	
		7:12	30.3	Non-Exposed	27	35	35	27	35	35	27	35	35	27	35	35	27	35	35	27	35	35	27	35	35	27	35	35	27	35	35	27	35	35	27	35	35	27	35	35	27	35	35	27	35	34
				Exposed	27	35	35	27	35	35	27	35	35	27	35	35	27	35	35	27	35	35	27	35	35	27	35	35	27	35	35	27	35	35	27	34	33	27	32	0	27	0	0	27	0	0
		8:12	33.7	Non-Exposed	28	37	37	28	37	37	28	37	37	28	37	37	28	37	37	28	37	37	28	37	37	28	37	37	28	37	37	28	37	37	28	37	37	28	37	37	28	37	37	28	36	34
				Exposed	28	37	37	28	37	37	28	37	37	28	37	37	28	37	37	28	37	37	28	37	37	28	37	37	28	37	36	28	34	32	28	32	0	28	0	0	28	0	0	28	0	0
		9:12	36.9	Non-Exposed	30	39	39	30	39	39	30	39	39	30	39	39	30	39	39	30	39	39	30	39	39	30	39	39	30	39	39	30	39	39	30	39	39	30	39	39	30	38	37	30	36	34
				Exposed	30	39	39	30	39	39	30	39	39	30	39	39	30	39	39	30	39	39	30	39	39	30	39	39	30	39	39	30	37	36	30	34	32	30	32	0	30	0	0	29	0	0
		10:12	39.8	Non-Exposed	31	41	41	31	41	41	31	41	41	31	41	41	31	41	41	31	41	41	31	41	41	31	41	41	31	41	41	31	41	41	31	41	41	31	41	40	31	38	37	31	36	34
				Exposed	31	41	41	31	41	41	31	41	41	31	41	41	31	41	41	31	41	41	31	41	41	31	41	41	31	41	39	31	37	36	31	34	32	31	32	0	31	0	0	29	0	0
		11:12	42.5	Non-Exposed	32	43	43	32	43	43	32	43	43	32	43	43	32	43	43	32	43	43	32	43	43	32	43	43	32	43	43	32	43	43	32	43	43	32	41	40	32	38	37	32	35	34
				Exposed	32	43	43	32	43	43	32	43	43	32	43	43	32	43	43	32	43	43	32	43	43	32	43	43	32	41	39	32	37	35	32	34	32	32	32	0	31	0	0	29	0	0
		12:12	45	Non-Exposed	34	45	45	34	45	45	34	45	45	34	45	45	34	45	45	34	45	45	34	45	45	34	45	45	34	45	45	34	45	45	34	44	43	34	41	40	34	38	36	33	35	34
				Exposed	34	45	45	34	45	45	34	45	45	34	45	45	34	45	45	34	45	45	34	45	45	34	45	44	34	40	39	34	37	35	34	34	32	34	31	0	31	0	0	29	0	0
	D	2:12	9.5	Non-Exposed	28	34	34	28	34	34	28	34	34	28	34	34	28	34	34	28	34	34	28	34	34	28	34	34	28	34	34	28	34	34	28	34	34	28	34	34	28	34	34	28	33	0
				Exposed	28	34	34	28	34	34	28	34	34	28	34	34	28	34	34	28	34	34	28	34	34	28	34	34	28	34	34	28	34	33	28	32	0	28	0	0	26	0	0	0	0	0
		3:12	14.0	Non-Exposed	26	32	32	26	32	32	26	32	32	26	32	32	26	32	32	26	32	32	26	32	32	26	32	32	26	32	32	26	32	32	26	32	32	26	32	32	26	32	32	26	32	0
				Exposed	26	32	32	26	32	32	26	32	32	26	32	32	26	32	32	26	32	32	26	32	32	26	32	32	26	32	32	26	32	32	26	32	0	26	0	0	0	0	0	0	0	0
		4:12	18.4	Non-Exposed	26	32	32	26	32	32	26	32	32	26	32	32	26	32	32	26	32	32	26	32	32	26	32	32	26	32	32	26	32	32	26	32	32	26	32	32	26	32	32	26	32	0
				Exposed	26	32	32	26	32	32	26	32	32	26	32	32	26	32	32	26	32	32	26	32	32	26	32	32	26	32	32	26	32	32	26	32	0	26	0	0	0	0	0	0	0	0
		5:12	22.6	Non-Exposed	26	33		26	33		26	33		26	33		26	33		26	33		26	33		26	33		26	33		26	33		26	33		26	33		26	33		26	33	
				Exposed	26	33		26	33		26	33		26	33		26	33		26	33		26	33		26	33		26	33		26	33		26	33		26	33		26	0		26	0	
		6:12	26.6	Non-Exposed	27	34		27	34		27	34		27	34		27	34		27	34		27	34		27	34		27	34		27	34		27	34		27	34		27	34		27	34	
				Exposed	27	34		27	34		27	34		27	34		27	34		27	34		27	34		27	34		27	34		27	34		27	34		27	33		27	0		27	0	
		7:12	30.3	Non-Exposed	27	35	35	27	35	35	27	35	35	27	35	35	27	35	35	27	35	35	27	35	35	27	35	35	27	35	35	27	35	35	27	35	35	27	35	35	27	34	33	27	32	30
				Exposed	27	35	35	27	35	35	27	35	35	27	35	35	27	35	35	27	35	35	27	35	35	27	35	35	27	35	35	27	33	32	27	0	0	27	0	0	27	0	0	27	0	0
		8:12	33.7	Non-Exposed	28	37	37	28	37	37	28	37	37	28	37	37	28	37	37	28	37	37	28	37	37	28	37	37	28	37	37	28	37	37	28	37	37	28	37	35	28	34	33	28	32	30
				Exposed	28	37	37	28	37	37	28	37	37	28	37	37	28	37	37	28	37	37	28	37	37	28	37	37	28	36	35	28	33	32	28	0	0	28	0	0	28	0	0	27	0	0
		9:12	36.9	Non-Exposed	30	39	39	30	39	39	30	39	39	30	39	39	30	39	39	30	39	39	30	39	39	30	39	39	30	39	39	30	39	39	30	39	38	30	37	35	30	34	32	29	32	0
				Exposed	30	39	39	30	39	39	30	39	39	30	39	39	30	39	39	30	39	39	30	39	39	30	39	39	30	36	35	30	33	32	30	0	0	30	0	0	29	0	0	27	0	0
		10:12	39.8	Non-Exposed	31	41	41	31	41	41	31	41	41	31	41	41	31	41	41	31	41	41	31	41	41	31	41	41	31	41	41	31	41	41	31	40	38	31	37	35	31	34	32	30	32	0
				Exposed	31	41	41	31	41	41	31	41	41	31	41	41	31	41	41	31	41	41	31	41	41	31	40	39	31	36	35	31	33	31	31	0	0	30	0	0	29	0	0	27	0	0
		11:12	42.5	Non-Exposed	32	43	43	32	43	43	32	43	43	32	43	43	32	43	43	32	43	43	32	43	43	32	43	43	32	43	43	32	43	42	32	40	38	32	37	35	32	34	32	31	32	0
				Exposed	32	43	43	32	43	43	32	43	43	32	43	43	32	43	43	32	43	43	32	42	41	32	40	39	32	36	35	32	33	31	32	0	0	30	0	0	28	0	0	27	0	0
		12:12	45	Non-Exposed	34	45	45	34	45	45	34	45	45	34	45	45	34	45	45	34	45	45	34	45	45	34	45	45	34	45	45	34	43	42	34	40	38	34	37	35	33	34	32	33	32	0
				Exposed	34	45	45	34	45	45	34	45	45	34	45	45	34	45	45	34	44	43	34	42	41	34	40	39	34	36	35	34	33	31	33	0	0	30	0	0	28	0	0	27	0	0

Tamarack 2.3 Rail – Hip Flush-Mount on 30 Foot Maximum Mean Roof Height – Portrait – Panel Length = 96 Inches or Less

Ground Snow Load	Exposure Category	Roof Pitch	Roof Angle	Wind Speed (mph)	95			100			105			110			115			120			125			130			140			150			160			170			180			190		
				Roof Area	1	2	3	1	2	3	1	2	3	1	2	3	1	2	3	1	2	3	1	2	3	1	2	3	1	2	3	1	2	3	1	2	3	1	2	3	1	2	3	1	2	3
70	B	2:12	9.5	Non-Exposed	26	31	31	26	31	31	26	31	31	26	31	31	26	31	31	26	31	31	26	31	31	26	31	31	26	31	31	26	31	31	26	31	31	26	31	31	26	31	31	26	31	31
				Exposed	26	31	31	26	31	31	26	31	31	26	31	31	26	31	31	26	31	31	26	31	31	26	31	31	26	31	31	26	31	31	26	31	31	26	31	31	26	31	31	26	31	31
		3:12	14.0	Non-Exposed	24	30	30	24	30	30	24	30	30	24	30	30	24	30	30	24	30	30	24	30	30	24	30	30	24	30	30	24	30	30	24	30	30	24	30	30	24	30	30	24	30	30
				Exposed	24	30	30	24	30	30	24	30	30	24	30	30	24	30	30	24	30	30	24	30	30	24	30	30	24	30	30	24	30	30	24	30	30	24	30	30	24	30	30	24	30	30
		4:12	18.4	Non-Exposed	24	30	30	24	30	30	24	30	30	24	30	30	24	30	30	24	30	30	24	30	30	24	30	30	24	30	30	24	30	30	24	30	30	24	30	30	24	30	30	24	30	30
				Exposed	24	30	30	24	30	30	24	30	30	24	30	30	24	30	30	24	30	30	24	30	30	24	30	30	24	30	30	24	30	30	24	30	30	24	30	30	24	30	30	24	30	30
		5:12	22.6	Non-Exposed	24	31		24	31		24	31		24	31		24	31		24	31		24	31		24	31		24	31		24	31		24	31		24	31		24	31		24	31	
				Exposed	24	31		24	31		24	31		24	31		24	31		24	31		24	31		24	31		24	31		24	31		24	31		24	31		24	31		24	31	
		6:12	26.6	Non-Exposed	25	32		25	32		25	32		25	32		25	32		25	32		25	32		25	32		25	32		25	32		25	32		25	32		25	32		25	32	
				Exposed	25	32		25	32		25	32		25	32		25	32		25	32		25	32		25	32		25	32		25	32		25	32		25	32		25	32		25	32	
		7:12	30.3	Non-Exposed	25	33	33	25	33	33	25	33	33	25	33	33	25	33	33	25	33	33	25	33	33	25	33	33	25	33	33	25	33	33	25	33	33	25	33	33	25	33	33	25	33	33
				Exposed	25	33	33	25	33	33	25	33	33	25	33	33	25	33	33	25	33	33	25	33	33	25	33	33	25	33	33	25	33	33	25	33	33	25	33	33	25	33	33	25	33	32
		8:12	33.7	Non-Exposed	26	34	34	26	34	34	26	34	34	26	34	34	26	34	34	26	34	34	26	34	34	26	34	34	26	34	34	26	34	34	26	34	34	26	34	34	26	34	34	26	34	34
				Exposed	26	34	34	26	34	34	26	34	34	26	34	34	26	34	34	26	34	34	26	34	34	26	34	34	26	34	34	26	34	34	26	34	34	26	34	34	26	34	34	26	34	32
		9:12	36.9	Non-Exposed	27	36	36	27	36	36	27	36	36	27	36	36	27	36	36	27	36	36	27	36	36	27	36	36	27	36	36	27	36	36	27	36	36	27	36	36	27	36	36	27	36	36
				Exposed	27	36	36	27	36	36	27	36	36	27	36	36	27	36	36	27	36	36	27	36	36	27	36	36	27	36	36	27	36	36	27	36	36	27	36	36	27	36	35	27	34	32
		10:12	39.8	Non-Exposed	29	38	38	29	38	38	29	38	38	29	38	38	29	38	38	29	38	38	29	38	38	29	38	38	29	38	38	29	38	38	29	38	38	29	38	38	29	38	38	29	38	38
				Exposed	29	38	38	29	38	38	29	38	38	29	38	38	29	38	38	29	38	38	29	38	38	29	38	38	29	38	38	29	38	38	29	38	38	29	38	38	29	36	35	29	34	32
		11:12	42.5	Non-Exposed	30	40	40	30	40	40	30	40	40	30	40	40	30	40	40	30	40	40	30	40	40	30	40	40	30	40	40	30	40	40	30	40	40	30	40	40	30	40	40	30	40	40
				Exposed	30	40	40	30	40	40	30	40	40	30	40	40	30	40	40	30	40	40	30	40	40	30	40	40	30	40	40	30	40	40	30	39	38	30	36	35	30	34	32			
		12:12	45	Non-Exposed	32	42	42	32	42	42	32	42	42	32	42	42	32	42	42	32	42	42	32	42	42	32	42	42	32	42	42	32	42	42	32	42	42	32	42	42	32	42	42	32	42	42
				Exposed	32	42	42	32	42	42	32	42	42	32	42	42	32	42	42	32	42	42	32	42	42	32	42	42	32	42	42	32	42	42	32	42	41	32	39	38	32	36	35	32	34	32
	C	2:12	9.5	Non-Exposed	26	31	31	26	31	31	26	31	31	26	31	31	26	31	31	26	31	31	26	31	31	26	31	31	26	31	31	26	31	31	26	31	31	26	31	31	26	31	31	26	31	31
				Exposed	26	31	31	26	31	31	26	31	31	26	31	31	26	31	31	26	31	31	26	31	31	26	31	31	26	31	31	26	31	31	26	31	0	26	0	0	26	0	0			
		3:12	14.0	Non-Exposed	24	30	30	24	30	30	24	30	30	24	30	30	24	30	30	24	30	30	24	30	30	24	30	30	24	30	30	24	30	30	24	30	30	24	30	30	24	30	30	24	30	30
				Exposed	24	30	30	24	30	30	24	30	30	24	30	30	24	30	30	24	30	30	24	30	30	24	30	30	24	30	30	24	30	30	24	30	0	24	0	0	24	0	0			
		4:12	18.4	Non-Exposed	24	30	30	24	30	30	24	30	30	24	30	30	24	30	30	24	30	30	24	30	30	24	30	30	24	30	30	24	30	30	24	30	30	24	30	30	24	30	30	24	30	30
				Exposed	24	30	30	24	30	30	24	30	30	24	30	30	24	30	30	24	30	30	24	30	30	24	30	30	24	30	30	24	30	30	24	30	0	24	0	0	24	0	0			
		5:12	22.6	Non-Exposed	24	31		24	31		24	31		24	31		24	31		24	31		24	31		24	31		24	31		24	31		24	31		24	31		24	31		24	31	
				Exposed	24	31		24	31		24	31		24	31		24	31		24	31		24	31		24	31		24	31		24	31		24	31		24	31		24	31		24	31	
		6:12	26.6	Non-Exposed	25	32		25	32		25	32		25	32		25	32		25	32		25	32		25	32		25	32		25	32		25	32		25	32		25	32		25	32	
				Exposed	25	32		25	32		25	32		25	32		25	32		25	32		25	32		25	32		25	32		25	32		25	32		25	32		25	32		25	32	
		7:12	30.3	Non-Exposed	25	33	33	25	33	33	25	33	33	25	33	33	25	33	33	25	33	33	25	33	33	25	33	33	25	33	33	25	33	33	25	33	33	25	33	33	25	33	33	25	33	33
				Exposed	25	33	33	25	33	33	25	33	33	25	33	33	25	33	33	25	33	33	25	33	33	25	33	33	25	33	33	25	33	33	25	32	0	25	0	0	25	0	0			
		8:12	33.7	Non-Exposed	26	34	34	26	34	34	26	34	34	26	34	34	26	34	34	26	34	34	26	34	34	26	34	34	26	34	34	26	34	34	26	34	34	26	34	34	26	34	34	26	34	34
				Exposed	26	34	34	26	34	34	26	34	34	26	34	34	26	34	34	26	34	34	26	34	34	26	34	34	26	34	34	26	34	32	26	32	0	26	0	0	26	0	0			
		9:12	36.9	Non-Exposed	27	36	36	27	36	36	27	36	36	27	36	36	27	36	36	27	36	36	27	36	36	27	36	36	27	36	36	27	36	36	27	36	36	27	36	36	27	36	36	27	36	34
				Exposed	27	36	36	27	36	36	27	36	36	27	36	36	27	36	36	27	36	36	27	36	36	27	36	36	27	36	36	27	36	36	27	34	32	27	32	0	27	0	0	27	0	0
		10:12	39.8	Non-Exposed	29	38	38	29	38	38	29	38	38	29	38	38	29	38	38	29	38	38	29	38	38	29	38	38	29	38	38	29	38	38	29	38	38	29	38	38	29	38	37	29	36	34
				Exposed	29	38	38	29	38	38	29	38	38	29	38	38	29	38	38	29	38	38	29	38	38	29	38	38	29	38	38	29	37	36	29	34	32	29	32	0	29	0	0	29	0	0
		11:12	42.5	Non-Exposed	30	40	40	30	40	40	30	40	40	30	40	40	30	40	40	30	40	40	30	40	40	30	40	40	30	40	40	30	40	40	30	40	40	30	40	40	30	38	37	30	35	34
				Exposed	30	40	40	30	40	40	30	40	40	30	40	40	30	40	40	30	40	40	30	40	40	30	40	40	30	40	39	30	37	35	30	34	32	30	32	0	30	0	0	29	0	0
		12:12	45	Non-Exposed	32	42	42	32	42	42	32	42	42	32	42	42	32	42	42	32	42	42	32	42	42	32	42	42	32	42	42	32	42	42	32	42	42	32	41	40	32	38	36	32	35	34
				Exposed	32	42	42	32	42	42	32	42	42	32	42	42	32	42	42	32	42	42	32	42	42	32	42	42	32	40	39	32	37	35	32	34	32	32	31	0	31	0	0	29	0	0
	D	2:12	9.5	Non-Exposed	26	31	31	26	31	31	26	31	31	26	31	31	26	31	31	26	31	31	26	31	31	26	31	31	26	31	31	26	31	31	26	31	31	26	31	31	26	31	31	26	31	0
				Exposed	26	31	31	26	31	31	26	31	31	26	31	31	26	31	31	26	31	31	26	31	31	26	31	31	26	31	31	26	31	31	26	31	0	26	0	0	26	0	0	0	0	0
		3:12	14.0	Non-Exposed	24	30	30	24	30	30	24	30	30	24	30	30	24	30	30	24	30	30	24	30	30	24	30	30	24	30	30	24	30	30	24	30	30	24	30	30	24	30	30	24	30	0
				Exposed	24	30	30	24	30	30	24	30	30	24	30	30	24	30	30	24	30	30	24	30	30	24	30	30	24	30	30	24	30	30	24	30	0	24	0	0	0	0	0	0	0	0
		4:12	18.4	Non-Exposed	24	30	30	24	30	30	24	30	30	24	30	30	24	30	30	24	30	30	24	30	30	24	30	30	24	30	30	24	30	30	24	30	30	24	30	30	24	30	30	24	30	0
				Exposed	24	30	30	24	30	30	24	30	30	24	30	30	24	30	30	24	30	30	24	30	30	24	30	30	24	30	30	24	30	30	24	30	0	24	0	0	0	0	0	0	0	0
		5:12	22.6	Non-Exposed	24	31		24	31		24	31		24	31		24	31		24	31		24	31		24	31		24	31		24	31		24	31		24	31		24	31		24	31	
				Exposed	24	31		24	31		24	31		24	31		24	31		24	31		24	31		24	31		24	31		24	31		24	31		24	31		24	0		24	0	
		6:12	26.6	Non-Exposed	25	32		25	32		25	32		25	32		25	32		25	32		25	32		25	32		25	32		25	32		25	32		25	32		25	32		25	32	
				Exposed	25	32		25	32		25	32		25	32		25	32		25	32		25	32		25	32		25	32		25	32		25	32		25	32		25	0		25	0	
		7:12	30.3	Non-Exposed	25	33	33	25	33	33	25	33	33	25	33	33	25	33	33	25	33	33	25	33	33	25	33	33	25	33	33	25	33	33	25	33	33	25	33	33	25	33	33	25	32	30
				Exposed	25	33	33	25	33	33	25	33	33	25	33	33	25	33	33	25	33	33	25	33	33	25	33	33	25	33	33	25	33	32	25	0	0	25	0	0	25	0	0	25	0	0
		8:12	33.7	Non-Exposed	26	34	34	26	34	34	26	34	34	26	34	34	26	34	34	26	34	34	26	34	34	26	34	34	26	34	34	26	34	34	26	34	34	26	34	34	26	34	33	26	32	30
				Exposed	26	34	34	26	34	34	26	34	34	26	34	34	26	34	34	26	34	34	26	34	34	26	34	34	26	34	34	26	33	32	26	0	0	26	0	0	26	0	0	26	0	0
		9:12	36.9	Non-Exposed	27	36	36	27	36	36	27	36	36	27	36	36	27	36	36	27	36	36	27	36	36	27	36	36	27	36	36	27	36	36	27	36	36	27	36	35	27	34	32	27	32	0
				Exposed	27	36	36	27	36	36	27	36	36	27	36	36	27	36	36	27	36	36	27	36	36	27	36	36	27	36	35	27	33	32	27	0	0	27	0	0	27	0	0	27	0	0
		10:12	39.8	Non-Exposed	29	38	38	29	38	38	29	38	38	29	38	38	29	38	38	29	38	38	29	38	38	29	38	38	29	38	38	29	38	38	29	38	38	29	37	35	29	34	32	29	32	0
				Exposed	29	38	38	29	38	38	29	38	38	29	38	38	29	38	38	29	38	38	29	38	38	29	38	38	29	36	35	29	33	31	29	0	0	29	0	0	29	0	0	27	0	0
		11:12	42.5	Non-Exposed	30	40	40	30	40	40	30	40	40	30	40	40	30	40	40	30	40	40	30	40	40	30	40	40	30	40	40	30	40	40	30	40	38	30	37	35	30	34	32	30	32	0
				Exposed	30	40	40	30	40	40	30	40	40	30	40	40	30	40	40	30	40	40	30	40	40	30	40	39	30	36	35	30	33	31	30	0	0	30	0	0	28	0	0	27	0	0
		12:12	45	Non-Exposed	32	42	42	32	42	42	32	42	42	32	42	42	32	42	42	32	42	42	32	42	42	32	42	42	32	42	42	32	42	42	32	40	38	32	37	35	32	34	32	31	32	0
				Exposed	32	42	42	32	42	42	32	42	42	32	42	42	32	42	42	32	42	42	32	42	41	32	40	39	32	36	35	32	33	31	32	0	0	30	0	0	28	0	0	27	0	0

Tamarack 2.3 Rail – Hip Flush-Mount on 30 Foot Maximum Mean Roof Height – Portrait – Panel Length = 96 Inches or Less

Ground Snow Load	Exposure Category	Roof Pitch	Roof Angle	Wind Speed (mph)	95			100			105			110			115			120			125			130			140			150			160			170			180			190		
				Roof Area	1	2	3	1	2	3	1	2	3	1	2	3	1	2	3	1	2	3	1	2	3	1	2	3	1	2	3	1	2	3	1	2	3	1	2	3	1	2	3	1	2	3
80	B	2:12	9.5	Non-Exposed	24	29	29	24	29	29	24	29	29	24	29	29	24	29	29	24	29	29	24	29	29	24	29	29	24	29	29	24	29	29	24	29	29	24	29	29	24	29	29	24	29	29
				Exposed	24	29	29	24	29	29	24	29	29	24	29	29	24	29	29	24	29	29	24	29	29	24	29	29	24	29	29	24	29	29	24	29	29	24	29	29	24	29	29	24	29	29
		3:12	14.0	Non-Exposed	23	28	28	23	28	28	23	28	28	23	28	28	23	28	28	23	28	28	23	28	28	23	28	28	23	28	28	23	28	28	23	28	28	23	28	28	23	28	28	23	28	28
				Exposed	23	28	28	23	28	28	23	28	28	23	28	28	23	28	28	23	28	28	23	28	28	23	28	28	23	28	28	23	28	28	23	28	28	23	28	28	23	28	28	23	28	28
		4:12	18.4	Non-Exposed	22	28	28	22	28	28	22	28	28	22	28	28	22	28	28	22	28	28	22	28	28	22	28	28	22	28	28	22	28	28	22	28	28	22	28	28	22	28	28	22	28	28
				Exposed	22	28	28	22	28	28	22	28	28	22	28	28	22	28	28	22	28	28	22	28	28	22	28	28	22	28	28	22	28	28	22	28	28	22	28	28	22	28	28	22	28	28
		5:12	22.6	Non-Exposed	23	29		23	29		23	29		23	29		23	29		23	29		23	29		23	29		23	29		23	29		23	29		23	29		23	29		23	29	
				Exposed	23	29		23	29		23	29		23	29		23	29		23	29		23	29		23	29		23	29		23	29		23	29		23	29		23	29		23	29	
		6:12	26.6	Non-Exposed	23	30		23	30		23	30		23	30		23	30		23	30		23	30		23	30		23	30		23	30		23	30		23	30		23	30		23	30	
				Exposed	23	30		23	30		23	30		23	30		23	30		23	30		23	30		23	30		23	30		23	30		23	30		23	30		23	30		23	30	
		7:12	30.3	Non-Exposed	24	31	31	24	31	31	24	31	31	24	31	31	24	31	31	24	31	31	24	31	31	24	31	31	24	31	31	24	31	31	24	31	31	24	31	31	24	31	31	24	31	31
				Exposed	24	31	31	24	31	31	24	31	31	24	31	31	24	31	31	24	31	31	24	31	31	24	31	31	24	31	31	24	31	31	24	31	31	24	31	31	24	31	31	24	31	31
		8:12	33.7	Non-Exposed	25	32	32	25	32	32	25	32	32	25	32	32	25	32	32	25	32	32	25	32	32	25	32	32	25	32	32	25	32	32	25	32	32	25	32	32	25	32	32	25	32	32
				Exposed	25	32	32	25	32	32	25	32	32	25	32	32	25	32	32	25	32	32	25	32	32	25	32	32	25	32	32	25	32	32	25	32	32	25	32	32	25	32	32	25	32	32
		9:12	36.9	Non-Exposed	26	34	34	26	34	34	26	34	34	26	34	34	26	34	34	26	34	34	26	34	34	26	34	34	26	34	34	26	34	34	26	34	34	26	34	34	26	34	34	26	34	34
				Exposed	26	34	34	26	34	34	26	34	34	26	34	34	26	34	34	26	34	34	26	34	34	26	34	34	26	34	34	26	34	34	26	34	32	26	34	32	26	34	32	26	34	32
		10:12	39.8	Non-Exposed	27	36	36	27	36	36	27	36	36	27	36	36	27	36	36	27	36	36	27	36	36	27	36	36	27	36	36	27	36	36	27	36	36	27	36	36	27	36	36	27	36	36
				Exposed	27	36	36	27	36	36	27	36	36	27	36	36	27	36	36	27	36	36	27	36	36	27	36	36	27	36	36	27	36	36	27	36	36	27	36	36	27	36	36	27	36	36
		11:12	42.5	Non-Exposed	28	38	38	28	38	38	28	38	38	28	38	38	28	38	38	28	38	38	28	38	38	28	38	38	28	38	38	28	38	38	28	38	38	28	38	38	28	38	38	28	38	38
				Exposed	28	38	38	28	38	38	28	38	38	28	38	38	28	38	38	28	38	38	28	38	38	28	38	38	28	38	38	28	38	38	28	38	38	28	38	38	28	38	38	28	38	38
		12:12	45	Non-Exposed	30	40	40	30	40	40	30	40	40	30	40	40	30	40	40	30	40	40	30	40	40	30	40	40	30	40	40	30	40	40	30	40	40	30	40	40	30	40	40	30	40	40
				Exposed	30	40	40	30	40	40	30	40	40	30	40	40	30	40	40	30	40	40	30	40	40	30	40	40	30	40	39	30	37	35	30	34	32	30	31	0	30	0	0	29	0	0
	C	2:12	9.5	Non-Exposed	24	29	29	24	29	29	24	29	29	24	29	29	24	29	29	24	29	29	24	29	29	24	29	29	24	29	29	24	29	29	24	29	29	24	29	29	24	29	29	24	29	29
				Exposed	24	29	29	24	29	29	24	29	29	24	29	29	24	29	29	24	29	29	24	29	29	24	29	29	24	29	29	24	29	29	24	29	0	24	0	0	24	0	0	24	0	0
		3:12	14.0	Non-Exposed	23	28	28	23	28	28	23	28	28	23	28	28	23	28	28	23	28	28	23	28	28	23	28	28	23	28	28	23	28	28	23	28	28	23	28	28	23	28	28	23	28	28
				Exposed	23	28	28	23	28	28	23	28	28	23	28	28	23	28	28	23	28	28	23	28	28	23	28	28	23	28	28	23	28	28	23	28	0	23	0	0	23	0	0	23	0	0
		4:12	18.4	Non-Exposed	22	28	28	22	28	28	22	28	28	22	28	28	22	28	28	22	28	28	22	28	28	22	28	28	22	28	28	22	28	28	22	28	28	22	28	28	22	28	28	22	28	28
				Exposed	22	28	28	22	28	28	22	28	28	22	28	28	22	28	28	22	28	28	22	28	28	22	28	28	22	28	28	22	28	28	22	28	0	22	0	0	22	0	0	22	0	0
		5:12	22.6	Non-Exposed	23	29		23	29		23	29		23	29		23	29		23	29		23	29		23	29		23	29		23	29		23	29		23	29		23	29		23	29	
				Exposed	23	29		23	29		23	29		23	29		23	29		23	29		23	29		23	29		23	29		23	29		23	29		23	29		23	29		23	29	
		6:12	26.6	Non-Exposed	23	30		23	30		23	30		23	30		23	30		23	30		23	30		23	30		23	30		23	30		23	30		23	30		23	30		23	30	
				Exposed	23	30		23	30		23	30		23	30		23	30		23	30		23	30		23	30		23	30		23	30		23	30		23	30		23	30		23	30	
		7:12	30.3	Non-Exposed	24	31	31	24	31	31	24	31	31	24	31	31	24	31	31	24	31	31	24	31	31	24	31	31	24	31	31	24	31	31	24	31	31	24	31	31	24	31	31	24	31	31
				Exposed	24	31	31	24	31	31	24	31	31	24	31	31	24	31	31	24	31	31	24	31	31	24	31	31	24	31	31	24	31	31	24	31	0	24	0	0	24	0	0	24	0	0
		8:12	33.7	Non-Exposed	25	32	32	25	32	32	25	32	32	25	32	32	25	32	32	25	32	32	25	32	32	25	32	32	25	32	32	25	32	32	25	32	32	25	32	32	25	32	32	25	32	32
				Exposed	25	32	32	25	32	32	25	32	32	25	32	32	25	32	32	25	32	32	25	32	32	25	32	32	25	32	32	25	32	32	25	32	0	25	0	0	25	0	0	25	0	0
		9:12	36.9	Non-Exposed	26	34	34	26	34	34	26	34	34	26	34	34	26	34	34	26	34	34	26	34	34	26	34	34	26	34	34	26	34	34	26	34	34	26	34	34	26	34	34	26	34	34
				Exposed	26	34	34	26	34	34	26	34	34	26	34	34	26	34	34	26	34	34	26	34	34	26	34	34	26	34	34	26	34	34	26	34	32	26	32	0	26	0	0	26	0	0
		10:12	39.8	Non-Exposed	27	36	36	27	36	36	27	36	36	27	36	36	27	36	36	27	36	36	27	36	36	27	36	36	27	36	36	27	36	36	27	36	36	27	36	36	27	36	36	27	36	34
				Exposed	27	36	36	27	36	36	27	36	36	27	36	36	27	36	36	27	36	36	27	36	36	27	36	36	27	36	36	27	36	36	27	34	32	27	32	0	27	0	0	27	0	0
		11:12	42.5	Non-Exposed	28	38	38	28	38	38	28	38	38	28	38	38	28	38	38	28	38	38	28	38	38	28	38	38	28	38	38	28	38	38	28	38	38	28	38	38	28	38	38	28	35	34
				Exposed	28	38	38	28	38	38	28	38	38	28	38	38	28	38	38	28	38	38	28	38	38	28	38	38	28	38	38	28	37	35	28	34	32	28	32	0	28	0	0	28	0	0
		12:12	45	Non-Exposed	30	40	40	30	40	40	30	40	40	30	40	40	30	40	40	30	40	40	30	40	40	30	40	40	30	40	40	30	40	40	30	40	40	30	40	40	30	38	36	30	35	34
				Exposed	30	40	40	30	40	40	30	40	40	30	40	40	30	40	40	30	40	40	30	40	40	30	40	40	30	40	39	30	37	35	30	34	32	30	31	0	30	0	0	29	0	0
	D	2:12	9.5	Non-Exposed	24	29	29	24	29	29	24	29	29	24	29	29	24	29	29	24	29	29	24	29	29	24	29	29	24	29	29	24	29	29	24	29	29	24	29	29	24	29	29	24	29	0
				Exposed	24	29	29	24	29	29	24	29	29	24	29	29	24	29	29	24	29	29	24	29	29	24	29	29	24	29	29	24	29	29	24	29	0	24	0	0	24	0	0	0	0	0
		3:12	14.0	Non-Exposed	23	28	28	23	28	28	23	28	28	23	28	28	23	28	28	23	28	28	23	28	28	23	28	28	23	28	28	23	28	28	23	28	28	23	28	28	23	28	28	23	28	0
				Exposed	23	28	28	23	28	28	23	28	28	23	28	28	23	28	28	23	28	28	23	28	28	23	28	28	23	28	28	23	28	28	23	28	0	23	0	0	0	0	0	0	0	0
		4:12	18.4	Non-Exposed	22	28	28	22	28	28	22	28	28	22	28	28	22	28	28	22	28	28	22	28	28	22	28	28	22	28	28	22	28	28	22	28	28	22	28	28	22	28	28	22	28	0
				Exposed	22	28	28	22	28	28	22	28	28	22	28	28	22	28	28	22	28	28	22	28	28	22	28	28	22	28	28	22	28	28	22	28	0	22	0	0	0	0	0	0	0	0
		5:12	22.6	Non-Exposed	23	29		23	29		23	29		23	29		23	29		23	29		23	29		23	29		23	29		23	29		23	29		23	29		23	29		23	29	
				Exposed	23	29		23	29		23	29		23	29		23	29		23	29		23	29		23	29		23	29		23	29		23	29		23	29		23	0		23	0	
		6:12	26.6	Non-Exposed	23	30		23	30		23	30		23	30		23	30		23	30		23	30		23	30		23	30		23	30		23	30		23	30		23	30		23	30	
				Exposed	23	30		23	30		23	30		23	30		23	30		23	30		23	30		23	30		23	30		23	30		23	30		23	30		23	0		23	0	
		7:12	30.3	Non-Exposed	24	31	31	24	31	31	24	31	31	24	31	31	24	31	31	24	31	31	24	31	31	24	31	31	24	31	31	24	31	31	24	31	31	24	31	31	24	31	31	24	31	30
				Exposed	24	31	31	24	31	31	24	31	31	24	31	31	24	31	31	24	31	31	24	31	31	24	31	31	24	31	31	24	31	31	24	0	0	24	0	0	24	0	0	24	0	0
		8:12	33.7	Non-Exposed	25	32	32	25	32	32	25	32	32	25	32	32	25	32	32	25	32	32	25	32	32	25	32	32	25	32	32	25	32	32	25	32	32	25	32	32	25	32	32	25	32	30
				Exposed	25	32	32	25	32	32	25	32	32	25	32	32	25	32	32	25	32	32	25	32	32	25	32	32	25	32	32	25	32	32	25	0	0	25	0	0	25	0	0	25	0	0
		9:12	36.9	Non-Exposed	26	34	34	26	34	34	26	34	34	26	34	34	26	34	34	26	34	34	26	34	34	26	34	34	26	34	34	26	34	34	26	34	34	26	34	34	26	34	32	26	32	0
				Exposed	26	34	34	26	34	34	26	34	34	26	34	34	26	34	34	26	34	34	26	34	34	26	34	34	26	34	34	26	33	32	26	0	0	26	0	0	26	0	0	26	0	0
		10:12	39.8	Non-Exposed	27	36	36	27	36	36	27	36	36	27	36	36	27	36	36	27	36	36	27	36	36	27	36	36	27	36	36	27	36	36	27	36	36	27	36	35	27	34	32	27	32	0
				Exposed	27	36	36	27	36	36	27	36	36	27	36	36	27	36	36	27	36	36	27	36	36	27	36	36	27	36	35	27	33	31	27	0	0	27	0	0	27	0	0	27	0	0
		11:12	42.5	Non-Exposed	28	38	38	28	38	38	28	38	38	28	38	38	28	38	38	28	38	38	28	38	38	28	38	38	28	38	38	28	38	38	28	38	38	28	37	35	28	34	32	28	32	0
				Exposed	28	38	38	28	38	38	28	38	38	28	38	38	28	38	38	28	38	38	28	38	38	28	38	38	28	36	35	28	33	31	28	0	0	28	0	0	28	0	0	27	0	0
		12:12	45	Non-Exposed	30	40	40	30	40	40	30	40	40	30	40	40	30	40	40	30	40	40	30	40	40	30	40	40	30	40	40	30	40	40	30	40	38	30	37	35	30	34	32	30	32	0
				Exposed	30	40	40	30	40	40	30	40	40	30	40	40	30	40	40	30	40	40	30	40	40	30	40	39	30	36	35	30	33	31	30	0	0	30	0	0	28	0	0	27	0	0

Tamarack 2.3 Rail – Hip Flush-Mount on 30 Foot Maximum Mean Roof Height – Portrait – Panel Length = 96 Inches or Less

Ground Snow Load	Exposure Category	Roof Pitch	Roof Angle	Wind Speed (mph)	95			100			105			110			115			120			125			130			140			150			160			170			180			190		
				Roof Area	1	2	3	1	2	3	1	2	3	1	2	3	1	2	3	1	2	3	1	2	3	1	2	3	1	2	3	1	2	3	1	2	3	1	2	3	1	2	3	1	2	3
90	B	2:12	9.5	Non-Exposed	23	28	28	23	28	28	23	28	28	23	28	28	23	28	28	23	28	28	23	28	28	23	28	28	23	28	28	23	28	28	23	28	28	23	28	28	23	28	28	23	28	28
				Exposed	23	28	28	23	28	28	23	28	28	23	28	28	23	28	28	23	28	28	23	28	28	23	28	28	23	28	28	23	28	28	23	28	28	23	28	28	23	28	28	23	28	28
		3:12	14.0	Non-Exposed	21	26	26	21	26	26	21	26	26	21	26	26	21	26	26	21	26	26	21	26	26	21	26	26	21	26	26	21	26	26	21	26	26	21	26	26	21	26	26	21	26	26
				Exposed	21	26	26	21	26	26	21	26	26	21	26	26	21	26	26	21	26	26	21	26	26	21	26	26	21	26	26	21	26	26	21	26	26	21	26	26	21	26	26	21	26	26
		4:12	18.4	Non-Exposed	21	26	26	21	26	26	21	26	26	21	26	26	21	26	26	21	26	26	21	26	26	21	26	26	21	26	26	21	26	26	21	26	26	21	26	26	21	26	26	21	26	26
				Exposed	21	26	26	21	26	26	21	26	26	21	26	26	21	26	26	21	26	26	21	26	26	21	26	26	21	26	26	21	26	26	21	26	26	21	26	26	21	26	26	21	26	26
		5:12	22.6	Non-Exposed	21	27		21	27		21	27		21	27		21	27		21	27		21	27		21	27		21	27		21	27		21	27		21	27		21	27		21	27	
				Exposed	21	27		21	27		21	27		21	27		21	27		21	27		21	27		21	27		21	27		21	27		21	27		21	27		21	27		21	27	
		6:12	26.6	Non-Exposed	0	0		0	0		0	0		0	0		0	0		0	0		0	0		0	0		0	0		0	0		0	0		0	0		0	0		0	0	
				Exposed	0	0		0	0		0	0		0	0		0	0		0	0		0	0		0	0		0	0		0	0		0	0		0	0		0	0		0	0	
		7:12	30.3	Non-Exposed	0	0	0	0	0	0	0	0	0	0	0	0	0	0	0	0	0	0	0	0	0	0	0	0	0	0	0	0	0	0	0	0	0	0	0	0	0	0	0	0	0	0
				Exposed	0	0	0	0	0	0	0	0	0	0	0	0	0	0	0	0	0	0	0	0	0	0	0	0	0	0	0	0	0	0	0	0	0	0	0	0	0	0	0	0	0	0
		8:12	33.7	Non-Exposed	23	30	30	23	30	30	23	30	30	23	30	30	23	30	30	23	30	30	23	30	30	23	30	30	23	30	30	23	30	30	23	30	30	23	30	30	23	30	30	23	30	30
				Exposed	23	30	30	23	30	30	23	30	30	23	30	30	23	30	30	23	30	30	23	30	30	23	30	30	23	30	30	23	30	30	23	30	30	23	30	30	23	30	30	23	30	30
		9:12	36.9	Non-Exposed	24	32	32	24	32	32	24	32	32	24	32	32	24	32	32	24	32	32	24	32	32	24	32	32	24	32	32	24	32	32	24	32	32	24	32	32	24	32	32	24	32	32
				Exposed	24	32	32	24	32	32	24	32	32	24	32	32	24	32	32	24	32	32	24	32	32	24	32	32	24	32	32	24	32	32	24	32	32	24	32	32	24	32	32	24	32	32
		10:12	39.8	Non-Exposed	26	34	34	26	34	34	26	34	34	26	34	34	26	34	34	26	34	34	26	34	34	26	34	34	26	34	34	26	34	34	26	34	34	26	34	34	26	34	34	26	34	34
				Exposed	26	34	34	26	34	34	26	34	34	26	34	34	26	34	34	26	34	34	26	34	34	26	34	34	26	34	34	26	34	34	26	34	34	26	34	34	26	34	34	26	34	32
		11:12	42.5	Non-Exposed	27	36	36	27	36	36	27	36	36	27	36	36	27	36	36	27	36	36	27	36	36	27	36	36	27	36	36	27	36	36	27	36	36	27	36	36	27	36	36	27	36	36
				Exposed	27	36	36	27	36	36	27	36	36	27	36	36	27	36	36	27	36	36	27	36	36	27	36	36	27	36	36	27	36	35	27	34	32	27	32	0	27	0	0	27	0	0
		12:12	45	Non-Exposed	28	38	38	28	38	38	28	38	38	28	38	38	28	38	38	28	38	38	28	38	38	28	38	38	28	38	38	28	38	38	28	38	38	28	38	38	28	38	36	28	35	34
				Exposed	28	38	38	28	38	38	28	38	38	28	38	38	28	38	38	28	38	38	28	38	38	28	38	38	28	38	38	28	37	35	28	34	32	28	31	0	28	0	0	28	0	0
	C	2:12	9.5	Non-Exposed	23	28	28	23	28	28	23	28	28	23	28	28	23	28	28	23	28	28	23	28	28	23	28	28	23	28	28	23	28	28	23	28	28	23	28	28	23	28	28	23	28	28
				Exposed	23	28	28	23	28	28	23	28	28	23	28	28	23	28	28	23	28	28	23	28	28	23	28	28	23	28	28	23	28	28	23	28	28	23	28	0	23	0	0	23	0	0
		3:12	14.0	Non-Exposed	21	26	26	21	26	26	21	26	26	21	26	26	21	26	26	21	26	26	21	26	26	21	26	26	21	26	26	21	26	26	21	26	26	21	26	26	21	26	26	21	26	26
				Exposed	21	26	26	21	26	26	21	26	26	21	26	26	21	26	26	21	26	26	21	26	26	21	26	26	21	26	26	21	26	26	21	26	26	21	26	0	21	0	0	21	0	0
		4:12	18.4	Non-Exposed	21	26	26	21	26	26	21	26	26	21	26	26	21	26	26	21	26	26	21	26	26	21	26	26	21	26	26	21	26	26	21	26	26	21	26	26	21	26	26	21	26	26
				Exposed	21	26	26	21	26	26	21	26	26	21	26	26	21	26	26	21	26	26	21	26	26	21	26	26	21	26	26	21	26	26	21	26	26	21	26	0	21	0	0	21	0	0
		5:12	22.6	Non-Exposed	21	27		21	27		21	27		21	27		21	27		21	27		21	27		21	27		21	27		21	27		21	27		21	27		21	27		21	27	
				Exposed	21	27		21	27		21	27		21	27		21	27		21	27		21	27		21	27		21	27		21	27		21	27		21	27		21	27		21	27	
		6:12	26.6	Non-Exposed	0	0		0	0		0	0		0	0		0	0		0	0		0	0		0	0		0	0		0	0		0	0		0	0		0	0		0	0	
				Exposed	0	0		0	0		0	0		0	0		0	0		0	0		0	0		0	0		0	0		0	0		0	0		0	0		0	0		0	0	
		7:12	30.3	Non-Exposed	0	0	0	0	0	0	0	0	0	0	0	0	0	0	0	0	0	0	0	0	0	0	0	0	0	0	0	0	0	0	0	0	0	0	0	0	0	0	0	0	0	0
				Exposed	0	0	0	0	0	0	0	0	0	0	0	0	0	0	0	0	0	0	0	0	0	0	0	0	0	0	0	0	0	0	0	0	0	0	0	0	0	0	0	0	0	0
		8:12	33.7	Non-Exposed	23	30	30	23	30	30	23	30	30	23	30	30	23	30	30	23	30	30	23	30	30	23	30	30	23	30	30	23	30	30	23	30	30	23	30	30	23	30	30	23	30	30
				Exposed	23	30	30	23	30	30	23	30	30	23	30	30	23	30	30	23	30	30	23	30	30	23	30	30	23	30	30	23	30	30	23	0	0	23	0	0	23	0	0	23	0	0
		9:12	36.9	Non-Exposed	24	32	32	24	32	32	24	32	32	24	32	32	24	32	32	24	32	32	24	32	32	24	32	32	24	32	32	24	32	32	24	32	32	24	32	32	24	32	32	24	32	0
				Exposed	24	32	32	24	32	32	24	32	32	24	32	32	24	32	32	24	32	32	24	32	32	24	32	32	24	32	32	24	32	32	24	0	0	24	0	0	24	0	0	24	0	0
		10:12	39.8	Non-Exposed	26	34	34	26	34	34	26	34	34	26	34	34	26	34	34	26	34	34	26	34	34	26	34	34	26	34	34	26	34	34	26	34	34	26	34	34	26	34	34	26	34	34
				Exposed	26	34	34	26	34	34	26	34	34	26	34	34	26	34	34	26	34	34	26	34	34	26	34	34	26	34	34	26	34	34	26	34	32	26	32	0	26	0	0	26	0	0
		11:12	42.5	Non-Exposed	27	36	36	27	36	36	27	36	36	27	36	36	27	36	36	27	36	36	27	36	36	27	36	36	27	36	36	27	36	36	27	36	36	27	36	36	27	36	36	27	35	34
				Exposed	27	36	36	27	36	36	27	36	36	27	36	36	27	36	36	27	36	36	27	36	36	27	36	36	27	36	36	27	36	35	27	34	32	27	32	0	27	0	0	27	0	0
		12:12	45	Non-Exposed	28	38	38	28	38	38	28	38	38	28	38	38	28	38	38	28	38	38	28	38	38	28	38	38	28	38	38	28	38	38	28	38	38	28	38	38	28	38	36	28	35	34
				Exposed	28	38	38	28	38	38	28	38	38	28	38	38	28	38	38	28	38	38	28	38	38	28	38	38	28	38	38	28	37	35	28	34	32	28	31	0	28	0	0	28	0	0
	D	2:12	9.5	Non-Exposed	23	28	28	23	28	28	23	28	28	23	28	28	23	28	28	23	28	28	23	28	28	23	28	28	23	28	28	23	28	28	23	28	28	23	28	28	23	28	28	23	28	0
				Exposed	23	28	28	23	28	28	23	28	28	23	28	28	23	28	28	23	28	28	23	28	28	23	28	28	23	28	28	23	28	28	23	28	0	23	0	0	23	0	0	0	0	0
		3:12	14.0	Non-Exposed	21	26	26	21	26	26	21	26	26	21	26	26	21	26	26	21	26	26	21	26	26	21	26	26	21	26	26	21	26	26	21	26	26	21	26	26	21	26	26	21	26	0
				Exposed	21	26	26	21	26	26	21	26	26	21	26	26	21	26	26	21	26	26	21	26	26	21	26	26	21	26	26	21	26	26	21	26	0	21	0	0	0	0	0	0	0	0
		4:12	18.4	Non-Exposed	21	26	26	21	26	26	21	26	26	21	26	26	21	26	26	21	26	26	21	26	26	21	26	26	21	26	26	21	26	26	21	26	26	21	26	26	21	26	26	21	26	0
				Exposed	21	26	26	21	26	26	21	26	26	21	26	26	21	26	26	21	26	26	21	26	26	21	26	26	21	26	26	21	26	26	21	26	0	21	0	0	0	0	0	0	0	0
		5:12	22.6	Non-Exposed	21	27		21	27		21	27		21	27		21	27		21	27		21	27		21	27		21	27		21	27		21	27		21	27		21	27		21	27	
				Exposed	21	27		21	27		21	27		21	27		21	27		21	27		21	27		21	27		21	27		21	27		21	27		21	27		21	0		21	0	
		6:12	26.6	Non-Exposed	0	0		0	0		0	0		0	0		0	0		0	0		0	0		0	0		0	0		0	0		0	0		0	0		0	0		0	0	
				Exposed	0	0		0	0		0	0		0	0		0	0		0	0		0	0		0	0		0	0		0	0		0	0		0	0		0	0		0	0	
		7:12	30.3	Non-Exposed	0	0	0	0	0	0	0	0	0	0	0	0	0	0	0	0	0	0	0	0	0	0	0	0	0	0	0	0	0	0	0	0	0	0	0	0	0	0	0	0	0	0
				Exposed	0	0	0	0	0	0	0	0	0	0	0	0	0	0	0	0	0	0	0	0	0	0	0	0	0	0	0	0	0	0	0	0	0	0	0	0	0	0	0	0	0	0
		8:12	33.7	Non-Exposed	23	30	30	23	30	30	23	30	30	23	30	30	23	30	30	23	30	30	23	30	30	23	30	30	23	30	30	23	30	30	23	30	30	23	30	30	23	30	30	23	30	30
				Exposed	23	30	30	23	30	30	23	30	30	23	30	30	23	30	30	23	30	30	23	30	30	23	30	30	23	30	30	23	30	30	23	0	0	23	0	0	23	0	0	23	0	0
		9:12	36.9	Non-Exposed	24	32	32	24	32	32	24	32	32	24	32	32	24	32	32	24	32	32	24	32	32	24	32	32	24	32	32	24	32	32	24	32	32	24	32	32	24	32	32	24	32	0
				Exposed	24	32	32	24	32	32	24	32	32	24	32	32	24	32	32	24	32	32	24	32	32	24	32	32	24	32	32	24	32	32	24	0	0	24	0	0	24	0	0	24	0	0
		10:12	39.8	Non-Exposed	26	34	34	26	34	34	26	34	34	26	34	34	26	34	34	26	34	34	26	34	34	26	34	34	26	34	34	26	34	34	26	34	34	26	34	34	26	34	32	26	32	0
				Exposed	26	34	34	26	34	34	26	34	34	26	34	34	26	34	34	26	34	34	26	34	34	26	34	34	26	34	34	26	33	31	26	0	0	26	0	0	26	0	0	26	0	0
		11:12	42.5	Non-Exposed	27	36	36	27	36	36	27	36	36	27	36	36	27	36	36	27	36	36	27	36	36	27	36	36	27	36	36	27	36	36	27	36	36	27	36	35	27	34	32	27	32	0
				Exposed	27	36	36	27	36	36	27	36	36	27	36	36	27	36	36	27	36	36	27	36	36	27	36	36	27	36	35	27	33	31	27	0	0	27	0	0	27	0	0	27	0	0
		12:12	45	Non-Exposed	28	38	38	28	38	38	28	38	38	28	38	38	28	38	38	28	38	38	28	38	38	28	38	38	28	38	38	28	38	38	28	38	38	28	37	35	28	34	32	28	32	0
				Exposed	28	38	38	28	38	38	28	38	38	28	38	38	28	38	38	28	38	38	28	38	38	28	38	38	28	36	35	28	33	31	28	0	0	28	0	0	28	0	0	27	0	0

Tamarack 2.3 Rail – Hip Flush-Mount on 30 Foot Maximum Mean Roof Height – Portrait – Panel Length = 96 Inches or Less

Ground Snow Load	Exposure Category	Roof Pitch	Roof Angle	Wind Speed (mph)	95			100			105			110			115			120			125			130			140			150			160			170			180			190		
				Roof Area	1	2	3	1	2	3	1	2	3	1	2	3	1	2	3	1	2	3	1	2	3	1	2	3	1	2	3	1	2	3	1	2	3	1	2	3	1	2	3	1	2	3
100	B	2:12	9.5	Non-Exposed	22	26	26	22	26	26	22	26	26	22	26	26	22	26	26	22	26	26	22	26	26	22	26	26	22	26	26	22	26	26	22	26	26	22	26	26	22	26	26	22	26	26
				Exposed	22	26	26	22	26	26	22	26	26	22	26	26	22	26	26	22	26	26	22	26	26	22	26	26	22	26	26	22	26	26	22	26	26	22	26	26	22	26	26	22	26	26
		3:12	14.0	Non-Exposed	20	25	25	20	25	25	20	25	25	20	25	25	20	25	25	20	25	25	20	25	25	20	25	25	20	25	25	20	25	25	20	25	25	20	25	25	20	25	25	20	25	25
				Exposed	20	25	25	20	25	25	20	25	25	20	25	25	20	25	25	20	25	25	20	25	25	20	25	25	20	25	25	20	25	25	20	25	25	20	25	25	20	25	25	20	25	25
		4:12	18.4	Non-Exposed	20	25	25	20	25	25	20	25	25	20	25	25	20	25	25	20	25	25	20	25	25	20	25	25	20	25	25	20	25	25	20	25	25	20	25	25	20	25	25	20	25	25
				Exposed	20	25	25	20	25	25	20	25	25	20	25	25	20	25	25	20	25	25	20	25	25	20	25	25	20	25	25	20	25	25	20	25	25	20	25	25	20	25	25	20	25	25
		5:12	22.6	Non-Exposed	0	0		0	0		0	0		0	0		0	0		0	0		0	0		0	0		0	0		0	0		0	0		0	0		0	0		0	0	
				Exposed	0	0		0	0		0	0		0	0		0	0		0	0		0	0		0	0		0	0		0	0		0	0		0	0		0	0		0	0	
		6:12	26.6	Non-Exposed	0	0		0	0		0	0		0	0		0	0		0	0		0	0		0	0		0	0		0	0		0	0		0	0		0	0		0	0	
				Exposed	0	0		0	0		0	0		0	0		0	0		0	0		0	0		0	0		0	0		0	0		0	0		0	0		0	0		0	0	
		7:12	30.3	Non-Exposed	0	0	0	0	0	0	0	0	0	0	0	0	0	0	0	0	0	0	0	0	0	0	0	0	0	0	0	0	0	0	0	0	0	0	0	0	0	0	0	0	0	0
				Exposed	0	0	0	0	0	0	0	0	0	0	0	0	0	0	0	0	0	0	0	0	0	0	0	0	0	0	0	0	0	0	0	0	0	0	0	0	0	0	0	0	0	0
		8:12	33.7	Non-Exposed	0	0	0	0	0	0	0	0	0	0	0	0	0	0	0	0	0	0	0	0	0	0	0	0	0	0	0	0	0	0	0	0	0	0	0	0	0	0	0	0	0	0
				Exposed	0	0	0	0	0	0	0	0	0	0	0	0	0	0	0	0	0	0	0	0	0	0	0	0	0	0	0	0	0	0	0	0	0	0	0	0	0	0	0	0	0	0
		9:12	36.9	Non-Exposed	0	0	0	0	0	0	0	0	0	0	0	0	0	0	0	0	0	0	0	0	0	0	0	0	0	0	0	0	0	0	0	0	0	0	0	0	0	0	0	0	0	0
				Exposed	0	0	0	0	0	0	0	0	0	0	0	0	0	0	0	0	0	0	0	0	0	0	0	0	0	0	0	0	0	0	0	0	0	0	0	0	0	0	0	0	0	0
		10:12	39.8	Non-Exposed	24	32	32	24	32	32	24	32	32	24	32	32	24	32	32	24	32	32	24	32	32	24	32	32	24	32	32	24	32	32	24	32	32	24	32	32	24	32	32	24	32	32
				Exposed	24	32	32	24	32	32	24	32	32	24	32	32	24	32	32	24	32	32	24	32	32	24	32	32	24	32	32	24	32	32	24	32	32	24	32	0	24	0	0	24	0	0
		11:12	42.5	Non-Exposed	26	34	34	26	34	34	26	34	34	26	34	34	26	34	34	26	34	34	26	34	34	26	34	34	26	34	34	26	34	34	26	34	34	26	34	34	26	34	34	26	34	34
				Exposed	26	34	34	26	34	34	26	34	34	26	34	34	26	34	34	26	34	34	26	34	34	26	34	34	26	34	34	26	34	34	26	34	32	26	32	0	26	0	0	26	0	0
		12:12	45	Non-Exposed	27	36	36	27	36	36	27	36	36	27	36	36	27	36	36	27	36	36	27	36	36	27	36	36	27	36	36	27	36	36	27	36	36	27	36	36	27	36	36	27	35	34
				Exposed	27	36	36	27	36	36	27	36	36	27	36	36	27	36	36	27	36	36	27	36	36	27	36	36	27	36	36	27	36	35	27	34	32	27	31	0	27	0	0	27	0	0
	C	2:12	9.5	Non-Exposed	22	26	26	22	26	26	22	26	26	22	26	26	22	26	26	22	26	26	22	26	26	22	26	26	22	26	26	22	26	26	22	26	26	22	26	26	22	26	26	22	26	26
				Exposed	22	26	26	22	26	26	22	26	26	22	26	26	22	26	26	22	26	26	22	26	26	22	26	26	22	26	26	22	26	26	22	26	0	22	0	0	22	0	0	22	0	0
		3:12	14.0	Non-Exposed	20	25	25	20	25	25	20	25	25	20	25	25	20	25	25	20	25	25	20	25	25	20	25	25	20	25	25	20	25	25	20	25	25	20	25	25	20	25	25	20	25	25
				Exposed	20	25	25	20	25	25	20	25	25	20	25	25	20	25	25	20	25	25	20	25	25	20	25	25	20	25	25	20	25	25	20	25	0	20	0	0	20	0	0	20	0	0
		4:12	18.4	Non-Exposed	20	25	25	20	25	25	20	25	25	20	25	25	20	25	25	20	25	25	20	25	25	20	25	25	20	25	25	20	25	25	20	25	25	20	25	25	20	25	25	20	25	25
				Exposed	20	25	25	20	25	25	20	25	25	20	25	25	20	25	25	20	25	25	20	25	25	20	25	25	20	25	25	20	25	25	20	25	0	20	0	0	20	0	0	20	0	0
		5:12	22.6	Non-Exposed	0	0		0	0		0	0		0	0		0	0		0	0		0	0		0	0		0	0		0	0		0	0		0	0		0	0		0	0	
				Exposed	0	0		0	0		0	0		0	0		0	0		0	0		0	0		0	0		0	0		0	0		0	0		0	0		0	0		0	0	
		6:12	26.6	Non-Exposed	0	0		0	0		0	0		0	0		0	0		0	0		0	0		0	0		0	0		0	0		0	0		0	0		0	0		0	0	
				Exposed	0	0		0	0		0	0		0	0		0	0		0	0		0	0		0	0		0	0		0	0		0	0		0	0		0	0		0	0	
		7:12	30.3	Non-Exposed	0	0	0	0	0	0	0	0	0	0	0	0	0	0	0	0	0	0	0	0	0	0	0	0	0	0	0	0	0	0	0	0	0	0	0	0	0	0	0	0	0	0
				Exposed	0	0	0	0	0	0	0	0	0	0	0	0	0	0	0	0	0	0	0	0	0	0	0	0	0	0	0	0	0	0	0	0	0	0	0	0	0	0	0	0	0	0
		8:12	33.7	Non-Exposed	0	0	0	0	0	0	0	0	0	0	0	0	0	0	0	0	0	0	0	0	0	0	0	0	0	0	0	0	0	0	0	0	0	0	0	0	0	0	0	0	0	0
				Exposed	0	0	0	0	0	0	0	0	0	0	0	0	0	0	0	0	0	0	0	0	0	0	0	0	0	0	0	0	0	0	0	0	0	0	0	0	0	0	0	0	0	0
		9:12	36.9	Non-Exposed	0	0	0	0	0	0	0	0	0	0	0	0	0	0	0	0	0	0	0	0	0	0	0	0	0	0	0	0	0	0	0	0	0	0	0	0	0	0	0	0	0	0
				Exposed	0	0	0	0	0	0	0	0	0	0	0	0	0	0	0	0	0	0	0	0	0	0	0	0	0	0	0	0	0	0	0	0	0	0	0	0	0	0	0	0	0	0
		10:12	39.8	Non-Exposed	24	32	32	24	32	32	24	32	32	24	32	32	24	32	32	24	32	32	24	32	32	24	32	32	24	32	32	24	32	32	24	32	32	24	32	32	24	32	32	24	32	0
				Exposed	24	32	32	24	32	32	24	32	32	24	32	32	24	32	32	24	32	32	24	32	32	24	32	32	24	32	32	24	32	31	24	0	0	24	0	0	24	0	0	24	0	0
		11:12	42.5	Non-Exposed	26	34	34	26	34	34	26	34	34	26	34	34	26	34	34	26	34	34	26	34	34	26	34	34	26	34	34	26	34	34	26	34	34	26	34	34	26	34	32	26	34	0
				Exposed	26	34	34	26	34	34	26	34	34	26	34	34	26	34	34	26	34	34	26	34	34	26	34	34	26	34	34	26	33	31	26	0	0	26	0	0	26	0	0	26	0	0
		12:12	45	Non-Exposed	27	36	36	27	36	36	27	36	36	27	36	36	27	36	36	27	36	36	27	36	36	27	36	36	27	36	36	27	36	36	27	36	36	27	36	35	27	34	32	27	32	0
				Exposed	27	36	36	27	36	36	27	36	36	27	36	36	27	36	36	27	36	36	27	36	36	27	36	36	27	36	36	27	33	31	27	0	0	27	0	0	27	0	0	27	0	0
	D	2:12	9.5	Non-Exposed	22	26	26	22	26	26	22	26	26	22	26	26	22	26	26	22	26	26	22	26	26	22	26	26	22	26	26	22	26	26	22	26	26	22	26	26	22	26	26	22	26	0
				Exposed	22	26	26	22	26	26	22	26	26	22	26	26	22	26	26	22	26	26	22	26	26	22	26	26	22	26	26	22	26	26	22	26	0	22	0	0	22	0	0	0	0	0
		3:12	14.0	Non-Exposed	20	25	25	20	25	25	20	25	25	20	25	25	20	25	25	20	25	25	20	25	25	20	25	25	20	25	25	20	25	25	20	25	25	20	25	25	20	25	25	20	25	0
				Exposed	20	25	25	20	25	25	20	25	25	20	25	25	20	25	25	20	25	25	20	25	25	20	25	25	20	25	25	20	25	25	20	25	0	20	0	0	0	0	0	0	0	0
		4:12	18.4	Non-Exposed	20	25	25	20	25	25	20	25	25	20	25	25	20	25	25	20	25	25	20	25	25	20	25	25	20	25	25	20	25	25	20	25	25	20	25	25	20	25	25	20	25	0
				Exposed	20	25	25	20	25	25	20	25	25	20	25	25	20	25	25	20	25	25	20	25	25	20	25	25	20	25	25	20	25	25	20	25	0	20	0	0	0	0	0	0	0	0
		5:12	22.6	Non-Exposed	0	0		0	0		0	0		0	0		0	0		0	0		0	0		0	0		0	0		0	0		0	0		0	0		0	0		0	0	
				Exposed	0	0		0	0		0	0		0	0		0	0		0	0		0	0		0	0		0	0		0	0		0	0		0	0		0	0		0	0	
		6:12	26.6	Non-Exposed	0	0		0	0		0	0		0	0		0	0		0	0		0	0		0	0		0	0		0	0		0	0		0	0		0	0		0	0	
				Exposed	0	0		0	0		0	0		0	0		0	0		0	0		0	0		0	0		0	0		0	0		0	0		0	0		0	0		0	0	
		7:12	30.3	Non-Exposed	0	0	0	0	0	0	0	0	0	0	0	0	0	0	0	0	0	0	0	0	0	0	0	0	0	0	0	0	0	0	0	0	0	0	0	0	0	0	0	0	0	0
				Exposed	0	0	0	0	0	0	0	0	0	0	0	0	0	0	0	0	0	0	0	0	0	0	0	0	0	0	0	0	0	0	0	0	0	0	0	0	0	0	0	0	0	0
		8:12	33.7	Non-Exposed	0	0	0	0	0	0	0	0	0	0	0	0	0	0	0	0	0	0	0	0	0	0	0	0	0	0	0	0	0	0	0	0	0	0	0	0	0	0	0	0	0	0
				Exposed	0	0	0	0	0	0	0	0	0	0	0	0	0	0	0	0	0	0	0	0	0	0	0	0	0	0	0	0	0	0	0	0	0	0	0	0	0	0	0	0	0	0
		9:12	36.9	Non-Exposed	0	0	0	0	0	0	0	0	0	0	0	0	0	0	0	0	0	0	0	0	0	0	0	0	0	0	0	0	0	0	0	0	0	0	0	0	0	0	0	0	0	0
				Exposed	0	0	0	0	0	0	0	0	0	0	0	0	0	0	0	0	0	0	0	0	0	0	0	0	0	0	0	0	0	0	0	0	0	0	0	0	0	0	0	0	0	0
		10:12	39.8	Non-Exposed	24	32	32	24	32	32	24	32	32	24	32	32	24	32	32	24	32	32	24	32	32	24	32	32	24	32	32	24	32	32	24	32	32	24	32	32	24	32	32	24	32	0
				Exposed	24	32	32	24	32	32	24	32	32	24	32	32	24	32	32	24	32	32	24	32	32	24	32	32	24	32	32	24	32	31	24	0	0	24	0	0	24	0	0	24	0	0
		11:12	42.5	Non-Exposed	26	34	34	26	34	34	26	34	34	26	34	34	26	34	34	26	34	34	26	34	34	26	34	34	26	34	34	26	34	34	26	34	34	26	34	34	26	34	32	26	34	0
				Exposed	26	34	34	26	34	34	26	34	34	26	34	34	26	34	34	26	34	34	26	34	34	26	34	34	26	34	34	26	33	31	26	0	0	26	0	0	26	0	0	26	0	0
		12:12	45	Non-Exposed	27	36	36	27	36	36	27	36	36	27	36	36	27	36	36	27	36	36	27	36	36	27	36	36	27	36	36	27	36	36	27	36	36	27	36	35	27	34	32	27	32	0
				Exposed	27	36	36	27	36	36	27	36	36	27	36	36	27	36	36	27	36	36	27	36	36	27	36	36	27	36	35	27	33	31	27	0	0	27	0	0	27	0	0	27	0	0

Tamarack 2.3 Rail – Hip Flush-Mount on 30 Foot Maximum Mean Roof Height – Portrait – Panel Length = 96 Inches or Less

Ground Snow Load	Exposure Category	Roof Pitch	Roof Angle	Wind Speed (mph)	95			100			105			110			115			120			125			130			140			150			160			170			180			190		
				Roof Area	1	2	3	1	2	3	1	2	3	1	2	3	1	2	3	1	2	3	1	2	3	1	2	3	1	2	3	1	2	3	1	2	3	1	2	3	1	2	3	1	2	3
110	B	2:12	9.5	Non-Exposed	20	25	25	20	25	25	20	25	25	20	25	25	20	25	25	20	25	25	20	25	25	20	25	25	20	25	25	20	25	25	20	25	25	20	25	25	20	25	25	20	25	25
				Exposed	20	25	25	20	25	25	20	25	25	20	25	25	20	25	25	20	25	25	20	25	25	20	25	25	20	25	25	20	25	25	20	25	25	20	25	25	20	25	25	20	25	25
		3:12	14.0	Non-Exposed	19	24	24	19	24	24	19	24	24	19	24	24	19	24	24	19	24	24	19	24	24	19	24	24	19	24	24	19	24	24	19	24	24	19	24	24	19	24	24	19	24	24
				Exposed	19	24	24	19	24	24	19	24	24	19	24	24	19	24	24	19	24	24	19	24	24	19	24	24	19	24	24	19	24	24	19	24	24	19	24	24	19	24	24	19	24	24
		4:12	18.4	Non-Exposed	0	0	0	0	0	0	0	0	0	0	0	0	0	0	0	0	0	0	0	0	0	0	0	0	0	0	0	0	0	0	0	0	0	0	0	0	0	0	0	0	0	0
				Exposed	0	0	0	0	0	0	0	0	0	0	0	0	0	0	0	0	0	0	0	0	0	0	0	0	0	0	0	0	0	0	0	0	0	0	0	0	0	0	0	0	0	0
		5:12	22.6	Non-Exposed	0	0		0	0		0	0		0	0		0	0		0	0		0	0		0	0		0	0		0	0		0	0		0	0		0	0		0	0	
				Exposed	0	0		0	0		0	0		0	0		0	0		0	0		0	0		0	0		0	0		0	0		0	0		0	0		0	0		0	0	
		6:12	26.6	Non-Exposed	0	0		0	0		0	0		0	0		0	0		0	0		0	0		0	0		0	0		0	0		0	0		0	0		0	0		0	0	
				Exposed	0	0		0	0		0	0		0	0		0	0		0	0		0	0		0	0		0	0		0	0		0	0		0	0		0	0		0	0	
		7:12	30.3	Non-Exposed	0	0	0	0	0	0	0	0	0	0	0	0	0	0	0	0	0	0	0	0	0	0	0	0	0	0	0	0	0	0	0	0	0	0	0	0	0	0	0	0	0	0
				Exposed	0	0	0	0	0	0	0	0	0	0	0	0	0	0	0	0	0	0	0	0	0	0	0	0	0	0	0	0	0	0	0	0	0	0	0	0	0	0	0	0	0	0
		8:12	33.7	Non-Exposed	0	0	0	0	0	0	0	0	0	0	0	0	0	0	0	0	0	0	0	0	0	0	0	0	0	0	0	0	0	0	0	0	0	0	0	0	0	0	0	0	0	0
				Exposed	0	0	0	0	0	0	0	0	0	0	0	0	0	0	0	0	0	0	0	0	0	0	0	0	0	0	0	0	0	0	0	0	0	0	0	0	0	0	0	0	0	0
		9:12	36.9	Non-Exposed	0	0	0	0	0	0	0	0	0	0	0	0	0	0	0	0	0	0	0	0	0	0	0	0	0	0	0	0	0	0	0	0	0	0	0	0	0	0	0	0	0	0
				Exposed	0	0	0	0	0	0	0	0	0	0	0	0	0	0	0	0	0	0	0	0	0	0	0	0	0	0	0	0	0	0	0	0	0	0	0	0	0	0	0	0	0	0
		10:12	39.8	Non-Exposed	0	0	0	0	0	0	0	0	0	0	0	0	0	0	0	0	0	0	0	0	0	0	0	0	0	0	0	0	0	0	0	0	0	0	0	0	0	0	0	0	0	0
				Exposed	0	0	0	0	0	0	0	0	0	0	0	0	0	0	0	0	0	0	0	0	0	0	0	0	0	0	0	0	0	0	0	0	0	0	0	0	0	0	0	0	0	0
		11:12	42.5	Non-Exposed	0	0	0	0	0	0	0	0	0	0	0	0	0	0	0	0	0	0	0	0	0	0	0	0	0	0	0	0	0	0	0	0	0	0	0	0	0	0	0	0	0	0
				Exposed	0	0	0	0	0	0	0	0	0	0	0	0	0	0	0	0	0	0	0	0	0	0	0	0	0	0	0	0	0	0	0	0	0	0	0	0	0	0	0	0	0	0
		12:12	45	Non-Exposed	26	34	34	26	34	34	26	34	34	26	34	34	26	34	34	26	34	34	26	34	34	26	34	34	26	34	34	26	34	34	26	34	34	26	34	34	26	34	34	26	34	34
				Exposed	26	34	34	26	34	34	26	34	34	26	34	34	26	34	34	26	34	34	26	34	34	26	34	34	26	34	34	26	34	34	26	34	34	26	34	34	26	34	34	26	34	32
	C	2:12	9.5	Non-Exposed	20	25	25	20	25	25	20	25	25	20	25	25	20	25	25	20	25	25	20	25	25	20	25	25	20	25	25	20	25	25	20	25	25	20	25	25	20	25	25	20	25	25
				Exposed	20	25	25	20	25	25	20	25	25	20	25	25	20	25	25	20	25	25	20	25	25	20	25	25	20	25	25	20	25	25	20	25	25	20	25	0	20	0	0	20	0	0
		3:12	14.0	Non-Exposed	19	24	24	19	24	24	19	24	24	19	24	24	19	24	24	19	24	24	19	24	24	19	24	24	19	24	24	19	24	24	19	24	24	19	24	24	19	24	24	19	24	24
				Exposed	19	24	24	19	24	24	19	24	24	19	24	24	19	24	24	19	24	24	19	24	24	19	24	24	19	24	24	19	24	24	19	24	24	19	24	0	19	0	0	19	0	0
		4:12	18.4	Non-Exposed	0	0	0	0	0	0	0	0	0	0	0	0	0	0	0	0	0	0	0	0	0	0	0	0	0	0	0	0	0	0	0	0	0	0	0	0	0	0	0	0	0	0
				Exposed	0	0	0	0	0	0	0	0	0	0	0	0	0	0	0	0	0	0	0	0	0	0	0	0	0	0	0	0	0	0	0	0	0	0	0	0	0	0	0	0	0	0
		5:12	22.6	Non-Exposed	0	0		0	0		0	0		0	0		0	0		0	0		0	0		0	0		0	0		0	0		0	0		0	0		0	0		0	0	
				Exposed	0	0		0	0		0	0		0	0		0	0		0	0		0	0		0	0		0	0		0	0		0	0		0	0		0	0		0	0	
		6:12	26.6	Non-Exposed	0	0		0	0		0	0		0	0		0	0		0	0		0	0		0	0		0	0		0	0		0	0		0	0		0	0		0	0	
				Exposed	0	0		0	0		0	0		0	0		0	0		0	0		0	0		0	0		0	0		0	0		0	0		0	0		0	0		0	0	
		7:12	30.3	Non-Exposed	0	0	0	0	0	0	0	0	0	0	0	0	0	0	0	0	0	0	0	0	0	0	0	0	0	0	0	0	0	0	0	0	0	0	0	0	0	0	0	0	0	0
				Exposed	0	0	0	0	0	0	0	0	0	0	0	0	0	0	0	0	0	0	0	0	0	0	0	0	0	0	0	0	0	0	0	0	0	0	0	0	0	0	0	0	0	0
		8:12	33.7	Non-Exposed	0	0	0	0	0	0	0	0	0	0	0	0	0	0	0	0	0	0	0	0	0	0	0	0	0	0	0	0	0	0	0	0	0	0	0	0	0	0	0	0	0	0
				Exposed	0	0	0	0	0	0	0	0	0	0	0	0	0	0	0	0	0	0	0	0	0	0	0	0	0	0	0	0	0	0	0	0	0	0	0	0	0	0	0	0	0	0
		9:12	36.9	Non-Exposed	0	0	0	0	0	0	0	0	0	0	0	0	0	0	0	0	0	0	0	0	0	0	0	0	0	0	0	0	0	0	0	0	0	0	0	0	0	0	0	0	0	0
				Exposed	0	0	0	0	0	0	0	0	0	0	0	0	0	0	0	0	0	0	0	0	0	0	0	0	0	0	0	0	0	0	0	0	0	0	0	0	0	0	0	0	0	0
		10:12	39.8	Non-Exposed	0	0	0	0	0	0	0	0	0	0	0	0	0	0	0	0	0	0	0	0	0	0	0	0	0	0	0	0	0	0	0	0	0	0	0	0	0	0	0	0	0	0
				Exposed	0	0	0	0	0	0	0	0	0	0	0	0	0	0	0	0	0	0	0	0	0	0	0	0	0	0	0	0	0	0	0	0	0	0	0	0	0	0	0	0	0	0
		11:12	42.5	Non-Exposed	0	0	0	0	0	0	0	0	0	0	0	0	0	0	0	0	0	0	0	0	0	0	0	0	0	0	0	0	0	0	0	0	0	0	0	0	0	0	0	0	0	0
				Exposed	0	0	0	0	0	0	0	0	0	0	0	0	0	0	0	0	0	0	0	0	0	0	0	0	0	0	0	0	0	0	0	0	0	0	0	0	0	0	0	0	0	0
		12:12	45	Non-Exposed	26	34	34	26	34	34	26	34	34	26	34	34	26	34	34	26	34	34	26	34	34	26	34	34	26	34	34	26	34	34	26	34	34	26	34	34	26	34	34	26	34	34
				Exposed	26	34	34	26	34	34	26	34	34	26	34	34	26	34	34	26	34	34	26	34	34	26	34	34	26	34	34	26	34	34	26	34	32	26	31	0	26	0	0	26	0	0
	D	2:12	9.5	Non-Exposed	20	25	25	20	25	25	20	25	25	20	25	25	20	25	25	20	25	25	20	25	25	20	25	25	20	25	25	20	25	25	20	25	25	20	25	25	20	25	25	20	25	0
				Exposed	20	25	25	20	25	25	20	25	25	20	25	25	20	25	25	20	25	25	20	25	25	20	25	25	20	25	25	20	25	25	20	25	0	20	0	0	20	0	0	0	0	0
		3:12	14.0	Non-Exposed	19	24	24	19	24	24	19	24	24	19	24	24	19	24	24	19	24	24	19	24	24	19	24	24	19	24	24	19	24	24	19	24	24	19	24	24	19	24	24	19	24	0
				Exposed	19	24	24	19	24	24	19	24	24	19	24	24	19	24	24	19	24	24	19	24	24	19	24	24	19	24	24	19	24	24	19	24	0	19	0	0	0	0	0	0	0	0
		4:12	18.4	Non-Exposed	0	0	0	0	0	0	0	0	0	0	0	0	0	0	0	0	0	0	0	0	0	0	0	0	0	0	0	0	0	0	0	0	0	0	0	0	0	0	0	0	0	0
				Exposed	0	0	0	0	0	0	0	0	0	0	0	0	0	0	0	0	0	0	0	0	0	0	0	0	0	0	0	0	0	0	0	0	0	0	0	0	0	0	0	0	0	0
		5:12	22.6	Non-Exposed	0	0		0	0		0	0		0	0		0	0		0	0		0	0		0	0		0	0		0	0		0	0		0	0		0	0		0	0	
				Exposed	0	0		0	0		0	0		0	0		0	0		0	0		0	0		0	0		0	0		0	0		0	0		0	0		0	0		0	0	
		6:12	26.6	Non-Exposed	0	0		0	0		0	0		0	0		0	0		0	0		0	0		0	0		0	0		0	0		0	0		0	0		0	0		0	0	
				Exposed	0	0		0	0		0	0		0	0		0	0		0	0		0	0		0	0		0	0		0	0		0	0		0	0		0	0		0	0	
		7:12	30.3	Non-Exposed	0	0	0	0	0	0	0	0	0	0	0	0	0	0	0	0	0	0	0	0	0	0	0	0	0	0	0	0	0	0	0	0	0	0	0	0	0	0	0	0	0	0
				Exposed	0	0	0	0	0	0	0	0	0	0	0	0	0	0	0	0	0	0	0	0	0	0	0	0	0	0	0	0	0	0	0	0	0	0	0	0	0	0	0	0	0	0
		8:12	33.7	Non-Exposed	0	0	0	0	0	0	0	0	0	0	0	0	0	0	0	0	0	0	0	0	0	0	0	0	0	0	0	0	0	0	0	0	0	0	0	0	0	0	0	0	0	0
				Exposed	0	0	0	0	0	0	0	0	0	0	0	0	0	0	0	0	0	0	0	0	0	0	0	0	0	0	0	0	0	0	0	0	0	0	0	0	0	0	0	0	0	0
		9:12	36.9	Non-Exposed	0	0	0	0	0	0	0	0	0	0	0	0	0	0	0	0	0	0	0	0	0	0	0	0	0	0	0	0	0	0	0	0	0	0	0	0	0	0	0	0	0	0
				Exposed	0	0	0	0	0	0	0	0	0	0	0	0	0	0	0	0	0	0	0	0	0	0	0	0	0	0	0	0	0	0	0	0	0	0	0	0	0	0	0	0	0	0
		10:12	39.8	Non-Exposed	0	0	0	0	0	0	0	0	0	0	0	0	0	0	0	0	0	0	0	0	0	0	0	0	0	0	0	0	0	0	0	0	0	0	0	0	0	0	0	0	0	0
				Exposed	0	0	0	0	0	0	0	0	0	0	0	0	0	0	0	0	0	0	0	0	0	0	0	0	0	0	0	0	0	0	0	0	0	0	0	0	0	0	0	0	0	0
		11:12	42.5	Non-Exposed	0	0	0	0	0	0	0	0	0	0	0	0	0	0	0	0	0	0	0	0	0	0	0	0	0	0	0	0	0	0	0	0	0	0	0	0	0	0	0	0	0	0
				Exposed	0	0	0	0	0	0	0	0	0	0	0	0	0	0	0	0	0	0	0	0	0	0	0	0	0	0	0	0	0	0	0	0	0	0	0	0	0	0	0	0	0	0
		12:12	45	Non-Exposed	26	34	34	26	34	34	26	34	34	26	34	34	26	34	34	26	34	34	26	34	34	26	34	34	26	34	34	26	34	34	26	34	34	26	34	34	26	34	32	26	32	0
				Exposed	26	34	34	26	34	34	26	34	34	26	34	34	26	34	34	26	34	34	26	34	34	26	34	34	26	34	34	26	33	31	26	0	0	26	0	0	26	0	0	26	0	0

Tamarack 2.3 Rail – Hip Flush-Mount on 30 Foot Maximum Mean Roof Height – Portrait – Panel Length = 96 Inches or Less

Ground Snow Load	Exposure Category	Roof Pitch	Roof Angle	Wind Speed (mph)	95			100			105			110			115			120			125			130			140			150			160			170			180			190		
				Roof Area	1	2	3	1	2	3	1	2	3	1	2	3	1	2	3	1	2	3	1	2	3	1	2	3	1	2	3	1	2	3	1	2	3	1	2	3	1	2	3	1	2	3
120	B	2:12	9.5	Non-Exposed	20	24	24	20	24	24	20	24	24	20	24	24	20	24	24	20	24	24	20	24	24	20	24	24	20	24	24	20	24	24	20	24	24	20	24	24	20	24	24	20	24	24
				Exposed	20	24	24	20	24	24	20	24	24	20	24	24	20	24	24	20	24	24	20	24	24	20	24	24	20	24	24	20	24	24	20	24	24	20	24	24	20	24	24	20	24	24
		3:12	14.0	Non-Exposed	18	23	23	18	23	23	18	23	23	18	23	23	18	23	23	18	23	23	18	23	23	18	23	23	18	23	23	18	23	23	18	23	23	18	23	23	18	23	23	18	23	23
				Exposed	18	23	23	18	23	23	18	23	23	18	23	23	18	23	23	18	23	23	18	23	23	18	23	23	18	23	23	18	23	23	18	23	23	18	23	23	18	23	23	18	23	23
		4:12	18.4	Non-Exposed	0	0	0	0	0	0	0	0	0	0	0	0	0	0	0	0	0	0	0	0	0	0	0	0	0	0	0	0	0	0	0	0	0	0	0	0	0	0	0	0	0	0
				Exposed	0	0	0	0	0	0	0	0	0	0	0	0	0	0	0	0	0	0	0	0	0	0	0	0	0	0	0	0	0	0	0	0	0	0	0	0	0	0	0	0	0	0
		5:12	22.6	Non-Exposed	0	0		0	0		0	0		0	0		0	0		0	0		0	0		0	0		0	0		0	0		0	0		0	0		0	0		0	0	
				Exposed	0	0		0	0		0	0		0	0		0	0		0	0		0	0		0	0		0	0		0	0		0	0		0	0		0	0		0	0	
		6:12	26.6	Non-Exposed	0	0		0	0		0	0		0	0		0	0		0	0		0	0		0	0		0	0		0	0		0	0		0	0		0	0		0	0	
				Exposed	0	0		0	0		0	0		0	0		0	0		0	0		0	0		0	0		0	0		0	0		0	0		0	0		0	0		0	0	
		7:12	30.3	Non-Exposed	0	0	0	0	0	0	0	0	0	0	0	0	0	0	0	0	0	0	0	0	0	0	0	0	0	0	0	0	0	0	0	0	0	0	0	0	0	0	0	0	0	0
				Exposed	0	0	0	0	0	0	0	0	0	0	0	0	0	0	0	0	0	0	0	0	0	0	0	0	0	0	0	0	0	0	0	0	0	0	0	0	0	0	0	0	0	0
		8:12	33.7	Non-Exposed	0	0	0	0	0	0	0	0	0	0	0	0	0	0	0	0	0	0	0	0	0	0	0	0	0	0	0	0	0	0	0	0	0	0	0	0	0	0	0	0	0	0
				Exposed	0	0	0	0	0	0	0	0	0	0	0	0	0	0	0	0	0	0	0	0	0	0	0	0	0	0	0	0	0	0	0	0	0	0	0	0	0	0	0	0	0	0
		9:12	36.9	Non-Exposed	0	0	0	0	0	0	0	0	0	0	0	0	0	0	0	0	0	0	0	0	0	0	0	0	0	0	0	0	0	0	0	0	0	0	0	0	0	0	0	0	0	0
				Exposed	0	0	0	0	0	0	0	0	0	0	0	0	0	0	0	0	0	0	0	0	0	0	0	0	0	0	0	0	0	0	0	0	0	0	0	0	0	0	0	0	0	0
		10:12	39.8	Non-Exposed	0	0	0	0	0	0	0	0	0	0	0	0	0	0	0	0	0	0	0	0	0	0	0	0	0	0	0	0	0	0	0	0	0	0	0	0	0	0	0	0	0	0
				Exposed	0	0	0	0	0	0	0	0	0	0	0	0	0	0	0	0	0	0	0	0	0	0	0	0	0	0	0	0	0	0	0	0	0	0	0	0	0	0	0	0	0	0
		11:12	42.5	Non-Exposed	0	0	0	0	0	0	0	0	0	0	0	0	0	0	0	0	0	0	0	0	0	0	0	0	0	0	0	0	0	0	0	0	0	0	0	0	0	0	0	0	0	0
				Exposed	0	0	0	0	0	0	0	0	0	0	0	0	0	0	0	0	0	0	0	0	0	0	0	0	0	0	0	0	0	0	0	0	0	0	0	0	0	0	0	0	0	0
		12:12	45	Non-Exposed	0	0	0	0	0	0	0	0	0	0	0	0	0	0	0	0	0	0	0	0	0	0	0	0	0	0	0	0	0	0	0	0	0	0	0	0	0	0	0	0	0	0
				Exposed	0	0	0	0	0	0	0	0	0	0	0	0	0	0	0	0	0	0	0	0	0	0	0	0	0	0	0	0	0	0	0	0	0	0	0	0	0	0	0	0	0	0
	C	2:12	9.5	Non-Exposed	20	24	24	20	24	24	20	24	24	20	24	24	20	24	24	20	24	24	20	24	24	20	24	24	20	24	24	20	24	24	20	24	24	20	24	24	20	24	24	20	24	24
				Exposed	20	24	24	20	24	24	20	24	24	20	24	24	20	24	24	20	24	24	20	24	24	20	24	24	20	24	24	20	24	24	20	24	0	20	0	0	20	0	0	20	0	0
		3:12	14.0	Non-Exposed	18	23	23	18	23	23	18	23	23	18	23	23	18	23	23	18	23	23	18	23	23	18	23	23	18	23	23	18	23	23	18	23	23	18	23	23	18	23	23	18	23	23
				Exposed	18	23	23	18	23	23	18	23	23	18	23	23	18	23	23	18	23	23	18	23	23	18	23	23	18	23	23	18	23	23	18	23	0	18	0	0	18	0	0	18	0	0
		4:12	18.4	Non-Exposed	0	0	0	0	0	0	0	0	0	0	0	0	0	0	0	0	0	0	0	0	0	0	0	0	0	0	0	0	0	0	0	0	0	0	0	0	0	0	0	0	0	0
				Exposed	0	0	0	0	0	0	0	0	0	0	0	0	0	0	0	0	0	0	0	0	0	0	0	0	0	0	0	0	0	0	0	0	0	0	0	0	0	0	0	0	0	0
		5:12	22.6	Non-Exposed	0	0		0	0		0	0		0	0		0	0		0	0		0	0		0	0		0	0		0	0		0	0		0	0		0	0		0	0	
				Exposed	0	0		0	0		0	0		0	0		0	0		0	0		0	0		0	0		0	0		0	0		0	0		0	0		0	0		0	0	
		6:12	26.6	Non-Exposed	0	0		0	0		0	0		0	0		0	0		0	0		0	0		0	0		0	0		0	0		0	0		0	0		0	0		0	0	
				Exposed	0	0		0	0		0	0		0	0		0	0		0	0		0	0		0	0		0	0		0	0		0	0		0	0		0	0		0	0	
		7:12	30.3	Non-Exposed	0	0	0	0	0	0	0	0	0	0	0	0	0	0	0	0	0	0	0	0	0	0	0	0	0	0	0	0	0	0	0	0	0	0	0	0	0	0	0	0	0	0
				Exposed	0	0	0	0	0	0	0	0	0	0	0	0	0	0	0	0	0	0	0	0	0	0	0	0	0	0	0	0	0	0	0	0	0	0	0	0	0	0	0	0	0	0
		8:12	33.7	Non-Exposed	0	0	0	0	0	0	0	0	0	0	0	0	0	0	0	0	0	0	0	0	0	0	0	0	0	0	0	0	0	0	0	0	0	0	0	0	0	0	0	0	0	0
				Exposed	0	0	0	0	0	0	0	0	0	0	0	0	0	0	0	0	0	0	0	0	0	0	0	0	0	0	0	0	0	0	0	0	0	0	0	0	0	0	0	0	0	0
		9:12	36.9	Non-Exposed	0	0	0	0	0	0	0	0	0	0	0	0	0	0	0	0	0	0	0	0	0	0	0	0	0	0	0	0	0	0	0	0	0	0	0	0	0	0	0	0	0	0
				Exposed	0	0	0	0	0	0	0	0	0	0	0	0	0	0	0	0	0	0	0	0	0	0	0	0	0	0	0	0	0	0	0	0	0	0	0	0	0	0	0	0	0	0
		10:12	39.8	Non-Exposed	0	0	0	0	0	0	0	0	0	0	0	0	0	0	0	0	0	0	0	0	0	0	0	0	0	0	0	0	0	0	0	0	0	0	0	0	0	0	0	0	0	0
				Exposed	0	0	0	0	0	0	0	0	0	0	0	0	0	0	0	0	0	0	0	0	0	0	0	0	0	0	0	0	0	0	0	0	0	0	0	0	0	0	0	0	0	0
		11:12	42.5	Non-Exposed	0	0	0	0	0	0	0	0	0	0	0	0	0	0	0	0	0	0	0	0	0	0	0	0	0	0	0	0	0	0	0	0	0	0	0	0	0	0	0	0	0	0
				Exposed	0	0	0	0	0	0	0	0	0	0	0	0	0	0	0	0	0	0	0	0	0	0	0	0	0	0	0	0	0	0	0	0	0	0	0	0	0	0	0	0	0	0
		12:12	45	Non-Exposed	0	0	0	0	0	0	0	0	0	0	0	0	0	0	0	0	0	0	0	0	0	0	0	0	0	0	0	0	0	0	0	0	0	0	0	0	0	0	0	0	0	0
				Exposed	0	0	0	0	0	0	0	0	0	0	0	0	0	0	0	0	0	0	0	0	0	0	0	0	0	0	0	0	0	0	0	0	0	0	0	0	0	0	0	0	0	0
	D	2:12	9.5	Non-Exposed	20	24	24	20	24	24	20	24	24	20	24	24	20	24	24	20	24	24	20	24	24	20	24	24	20	24	24	20	24	24	20	24	24	20	24	24	20	24	24	20	24	0
				Exposed	20	24	24	20	24	24	20	24	24	20	24	24	20	24	24	20	24	24	20	24	24	20	24	24	20	24	24	20	24	24	20	24	0	20	0	0	20	0	0	0	0	0
		3:12	14.0	Non-Exposed	18	23	23	18	23	23	18	23	23	18	23	23	18	23	23	18	23	23	18	23	23	18	23	23	18	23	23	18	23	23	18	23	23	18	23	23	18	23	23	18	23	0
				Exposed	18	23	23	18	23	23	18	23	23	18	23	23	18	23	23	18	23	23	18	23	23	18	23	23	18	23	23	18	23	23	18	23	0	18	0	0	0	0	0	0	0	0
		4:12	18.4	Non-Exposed	0	0	0	0	0	0	0	0	0	0	0	0	0	0	0	0	0	0	0	0	0	0	0	0	0	0	0	0	0	0	0	0	0	0	0	0	0	0	0	0	0	0
				Exposed	0	0	0	0	0	0	0	0	0	0	0	0	0	0	0	0	0	0	0	0	0	0	0	0	0	0	0	0	0	0	0	0	0	0	0	0	0	0	0	0	0	0
		5:12	22.6	Non-Exposed	0	0		0	0		0	0		0	0		0	0		0	0		0	0		0	0		0	0		0	0		0	0		0	0		0	0		0	0	
				Exposed	0	0		0	0		0	0		0	0		0	0		0	0		0	0		0	0		0	0		0	0		0	0		0	0		0	0		0	0	
		6:12	26.6	Non-Exposed	0	0		0	0		0	0		0	0		0	0		0	0		0	0		0	0		0	0		0	0		0	0		0	0		0	0		0	0	
				Exposed	0	0		0	0		0	0		0	0		0	0		0	0		0	0		0	0		0	0		0	0		0	0		0	0		0	0		0	0	
		7:12	30.3	Non-Exposed	0	0	0	0	0	0	0	0	0	0	0	0	0	0	0	0	0	0	0	0	0	0	0	0	0	0	0	0	0	0	0	0	0	0	0	0	0	0	0	0	0	0
				Exposed	0	0	0	0	0	0	0	0	0	0	0	0	0	0	0	0	0	0	0	0	0	0	0	0	0	0	0	0	0	0	0	0	0	0	0	0	0	0	0	0	0	0
		8:12	33.7	Non-Exposed	0	0	0	0	0	0	0	0	0	0	0	0	0	0	0	0	0	0	0	0	0	0	0	0	0	0	0	0	0	0	0	0	0	0	0	0	0	0	0	0	0	0
				Exposed	0	0	0	0	0	0	0	0	0	0	0	0	0	0	0	0	0	0	0	0	0	0	0	0	0	0	0	0	0	0	0	0	0	0	0	0	0	0	0	0	0	0
		9:12	36.9	Non-Exposed	0	0	0	0	0	0	0	0	0	0	0	0	0	0	0	0	0	0	0	0	0	0	0	0	0	0	0	0	0	0	0	0	0	0	0	0	0	0	0	0	0	0
				Exposed	0	0	0	0	0	0	0	0	0	0	0	0	0	0	0	0	0	0	0	0	0	0	0	0	0	0	0	0	0	0	0	0	0	0	0	0	0	0	0	0	0	0
		10:12	39.8	Non-Exposed	0	0	0	0	0	0	0	0	0	0	0	0	0	0	0	0	0	0	0	0	0	0	0	0	0	0	0	0	0	0	0	0	0	0	0	0	0	0	0	0	0	0
				Exposed	0	0	0	0	0	0	0	0	0	0	0	0	0	0	0	0	0	0	0	0	0	0	0	0	0	0	0	0	0	0	0	0	0	0	0	0	0	0	0	0	0	0
		11:12	42.5	Non-Exposed	0	0	0	0	0	0	0	0	0	0	0	0	0	0	0	0	0	0	0	0	0	0	0	0	0	0	0	0	0	0	0	0	0	0	0	0	0	0	0	0	0	0
				Exposed	0	0	0	0	0	0	0	0	0	0	0	0	0	0	0	0	0	0	0	0	0	0	0	0	0	0	0	0	0	0	0	0	0	0	0	0	0	0	0	0	0	0
		12:12	45	Non-Exposed	0	0	0	0	0	0	0	0	0	0	0	0	0	0	0	0	0	0	0	0	0	0	0	0	0	0	0	0	0	0	0	0	0	0	0	0	0	0	0	0	0	0
				Exposed	0	0	0	0	0	0	0	0	0	0	0	0	0	0	0	0	0	0	0	0	0	0	0	0	0	0	0	0	0	0	0	0	0	0	0	0	0	0	0	0	0	0

Roof Areas Per SML Tables	Roof Zones Per ASCE 7-16
1	1`, 1
2	2
3	3

Diagrams

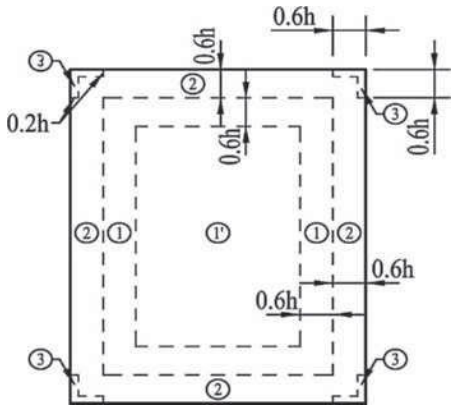

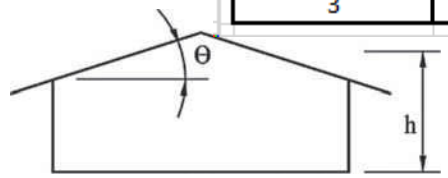

Notation

B = Horizontal dimension of building measured normal to wind direction, in ft (m).
h = Eave height shall be used for $\theta = 10°$.
θ = Angle of plane of roof from horizontal, in degrees.

External Pressure Coefficients

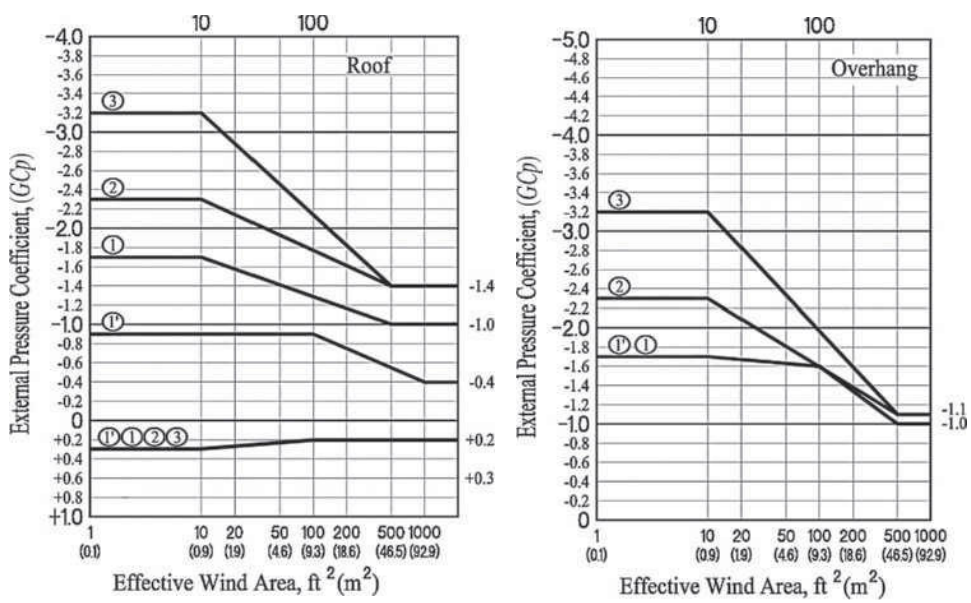

Notes

1. Vertical scale denotes (GCp) to be used with q_h.
2. Horizontal scale denotes effective wind area, in ft^2 (m^2).
3. Plus and minus signs signify pressures acting toward and away from the surfaces, respectively.
4. Each component shall be designed for maximum positive and negative pressures.
5. If a parapet equal to or higher than 3 ft (0.9 m) is provided around the perimeter of the roof with $\theta \leq 7°$, the negative values of (GCp) in Zone 3 shall be equal to those for Zone 2, and positive values of (GCp) in Zones 2 and 3 shall be set equal to those for wall Zones 4 and 5, respectively, in Fig. 30.3-1.
6. Values of (GCp) for roof overhangs include pressure contributions from both upper and lower surfaces.
7. If overhangs exist, the lesser horizontal dimension of the building shall not include any overhang dimension, but the edge distance, a, shall be measured from the outside edge of the overhang.

FIGURE 30.3-2A Components and Cladding [$h \leq 60$ ft ($h \leq 18.3$ m)]: External Pressure Coefficients, (GC_p), for Enclosed and Partially Enclosed Buildings—Gable Roofs, $\theta \leq 7°$

Roof Areas Per SML Tables	Roof Zones Per ASCE 7-16
1	1, 2e
2	2n, 2r, 3e
3	3r

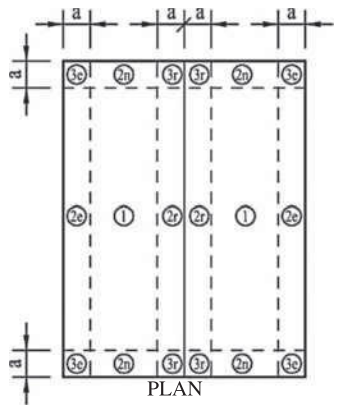

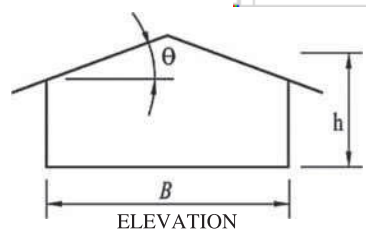

Notation

a = 10% of least horizontal dimension or 0.4h, whichever is smaller, but not less than either 4% of least horizontal dimension or 3 ft (0.9 m). If an overhang exists, the edge distance shall be measured from the outside edge of the overhang. The horizontal dimensions used to compute the edge distance shall not include any overhang distances.

B = Horizontal dimension of building measured normal to wind direction, in ft (m).

h = Mean roof height, in ft (m), except that eave height shall be used for $\theta \leq 10°$.

θ = Angle of plane of roof from horizontal, in degrees.

External Pressure Coefficients

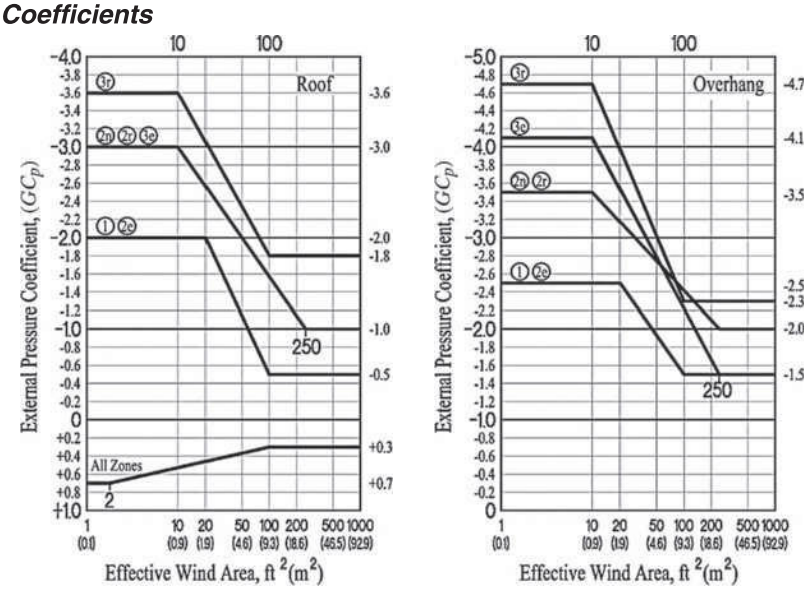

Notes

1. Vertical scale denotes (GCp) to be used with q_h.
2. Horizontal scale denotes effective wind area, in ft^2 (m^2).
3. Plus and minus signs signify pressures acting toward and away from the surfaces, respectively.
4. Each component shall be designed for maximum positive and negative pressures.
5. Values of (GCp) for roof overhangs include pressure contributions from both upper and lower surfaces.
6. If overhangs exist, the lesser horizontal dimension of the building shall not include any overhang dimension, but the edge distance, a, shall be measured from the outside edge of the overhang.

FIGURE 30.3-2B Components and Cladding [$h \leq 60$ ft ($h \leq 18.3$ m)]: External Pressure Coefficients, (GC_p), for Enclosed and Partially Enclosed Buildings—Gable Roofs, $7° < \theta \leq 20°$

Roof Areas Per SML Tables	Roof Zones Per ASCE 7-16
1	1, 2e
2	2n, 2r, 3e
3	3r

Diagrams

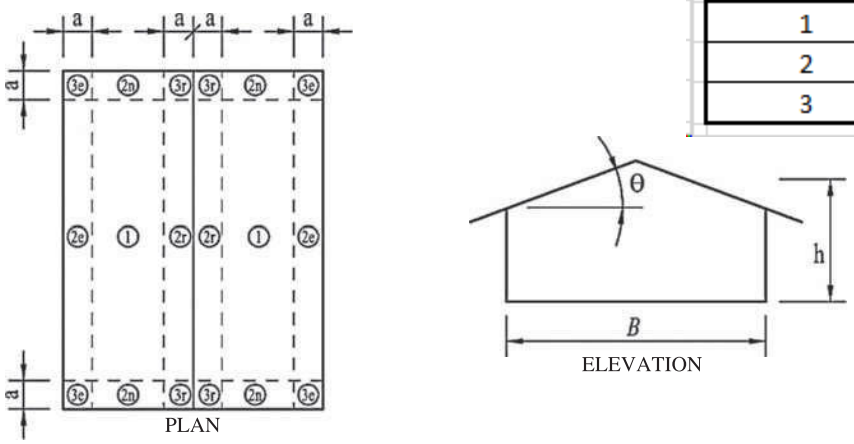

Notation

a = 10% of least horizontal dimension or 0.4h, whichever is smaller, but not less than either 4% of least horizontal dimension or 3 ft (0.9 m). If an overhang exists, the edge distance shall be measured from the outside edge of the overhang. The horizontal dimensions used to compute the edge distance shall not include any overhang distances.

B = Horizontal dimension of building measured normal to wind direction, in ft (m).

h = Mean roof height, in ft (m).

θ = Angle of plane of roof from horizontal, in degrees.

External Pressure Coefficients

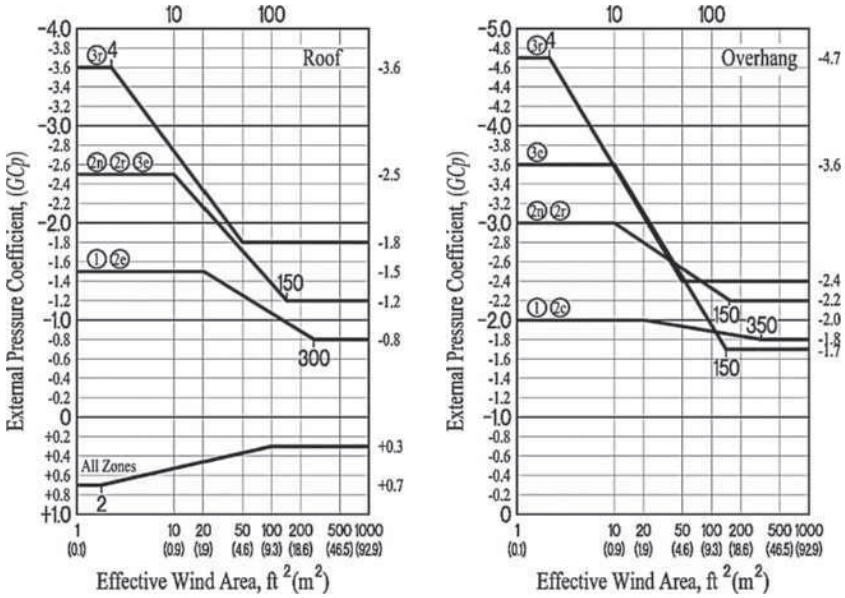

Notes

1. Vertical scale denotes (GCp) to be used with q_h.
2. Horizontal scale denotes effective wind area, in ft^2 (m^2).
3. Plus and minus signs signify pressures acting toward and away from the surfaces, respectively.
4. Each component shall be designed for maximum positive and negative pressures.
5. Values of (GCp) for roof overhangs include pressure contributions from both upper and lower surfaces.
6. If overhangs exist, the lesser horizontal dimension of the building shall not include any overhang dimension, but the edge distance, a, shall be measured from the outside edge of the overhang.

FIGURE 30.3-2C Components and Cladding [$h \leq 60$ ft ($h \leq 18.3$ m)]: External Pressure Coefficients, (GC_p), for Enclosed and Partially Enclosed Buildings—Gable Roofs, 20° < θ ≤ 27°

Roof Areas Per SML Tables	Roof Zones Per ASCE 7-16
1	1, 2e, 2r
2	2n, 3r
3	3e

Diagrams

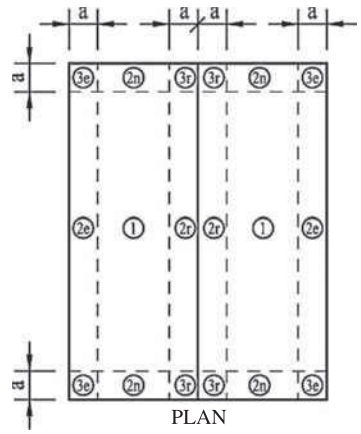

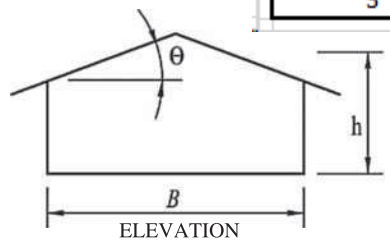

Notation

a = 10% of least horizontal dimension or 0.4h, whichever is smaller, but not less than either 4% of least horizontal dimension or 3 ft (0.9 m). If an overhang exists, the edge distance shall be measured from the outside edge of the overhang. The horizontal dimensions used to compute the edge distance shall not include any overhang distances.

B = Horizontal dimension of building measured normal to wind direction, in ft (m).

h = Mean roof height, in ft (m).

θ = Angle of plane of roof from horizontal, in degrees.

External Pressure Coefficients

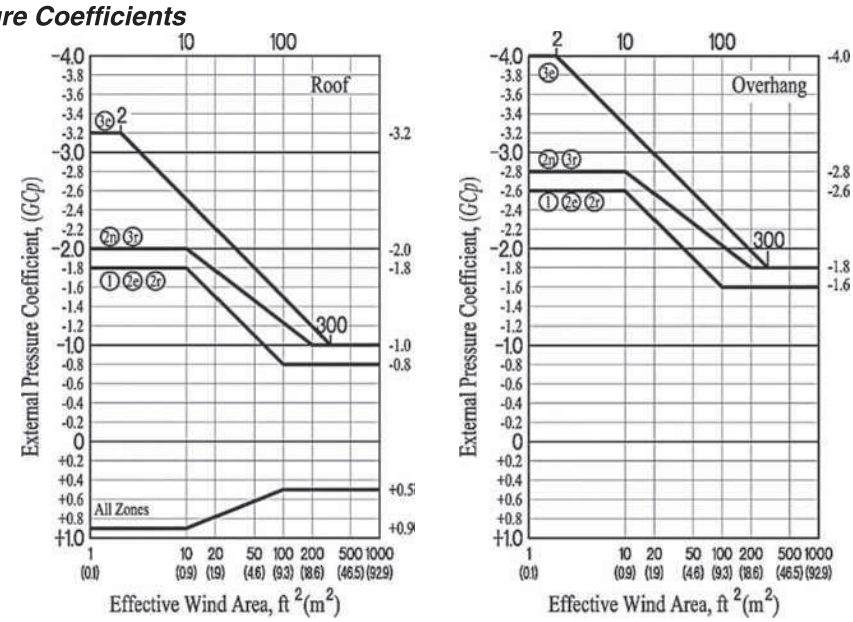

Notes

1. Vertical scale denotes (GCp) to be used with q_h.
2. Horizontal scale denotes effective wind area, in ft^2 (m^2).
3. Plus and minus signs signify pressures acting toward and away from the surfaces, respectively.
4. Each component shall be designed for maximum positive and negative pressures.
5. Values of (GCp) for roof overhangs include pressure contributions from both upper and lower surfaces.
6. If overhangs exist, the lesser horizontal dimension of the building shall not include any overhang dimension, but the edge distance, a, shall be measured from the outside edge of the overhang.

FIGURE 30.3-2D Components and Cladding [$h \leq 60$ ft ($h \leq 18.3$ m)]: External Pressure Coefficients, (GC_p), for Enclosed and Partially Enclosed Buildings—Gable Roofs, 27° < θ ≤ 45°

Roof Areas Per SML Tables	Roof Zones Per ASCE 7-16
1	1
2	2r
3	2e, 3

Diagrams

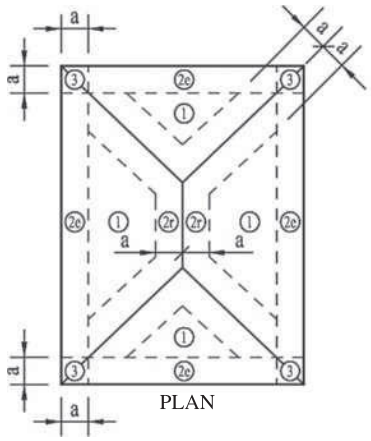

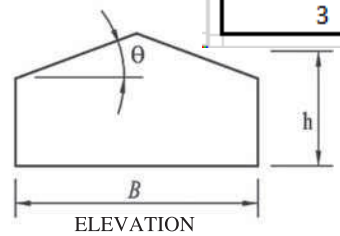

Notation

a = 10% of least horizontal dimension or 0.4h, whichever is smaller, but not less than either 4% of least horizontal dimension or 3 ft (0.9 m). If an overhang exists, the edge distance shall be measured from the outside edge of the overhang. The horizontal dimensions used to compute the edge distance shall not include any overhang distances.

h = Mean roof height, in ft (m), except that eave height shall be used for $\theta \leq 10°$.

B = Horizontal dimension of building measured normal to wind direction, in ft (m).

θ = Angle of plane of roof from horizontal, in degrees.

External Pressure Coefficients

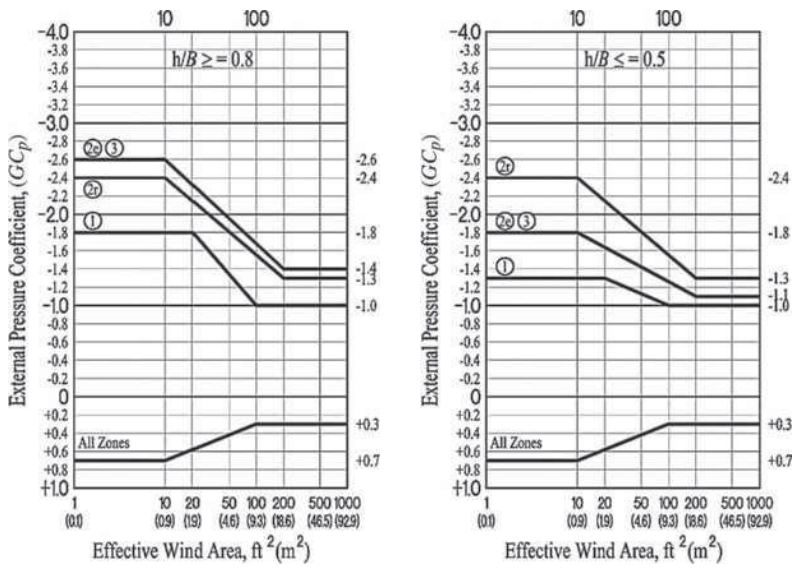

Notes

1. Vertical scale denotes (GCp) to be used with q_h.
2. Horizontal scale denotes effective wind area, in ft^2 (m^2).
3. Plus and minus signs signify pressures acting toward and away from the surfaces, respectively.
4. Each component shall be designed for maximum positive and negative pressures.
5. If overhangs exist, the lesser horizontal dimension of the building shall not include any overhang dimension, but the edge distance, a, shall be measured from the outside edge of the overhang.
6. Interpolation of (GCp) between the two different h/B values is required for $0.5 < h/B < 0.8$.
7. B for Zone 3 is the least horizontal dimension. B for Zones 1 and 2e is normal to the building width and normal to the eave defining Zone 2e.

FIGURE 30.3-2E Components and Cladding [$h \leq 60$ ft ($h \leq 18.3$ m)]: External Pressure Coefficients, (GC_p), for Enclosed and Partially Enclosed Buildings—Hip Roofs, $7° < \theta \leq 20°$ (Roof)

Roof Areas Per SML Tables	Roof Zones Per ASCE 7-16
1	1
2	2e, 2r, 3
3	NA

Diagrams

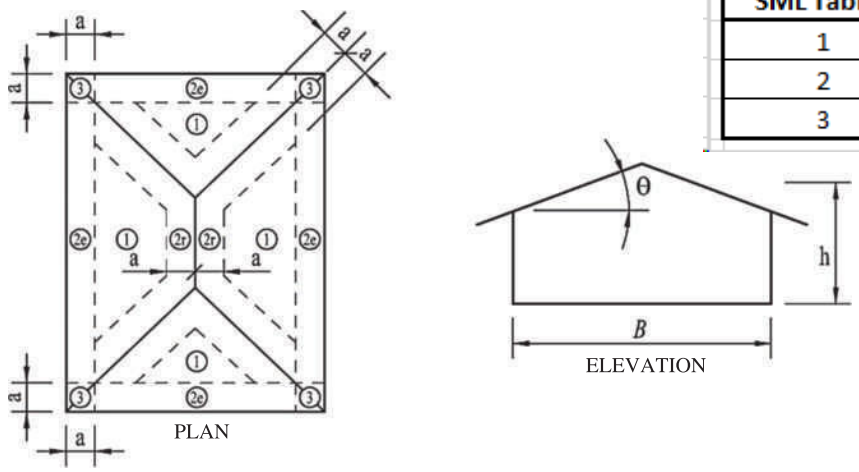

Notation

a = 10% of least horizontal dimension or 0.4h, whichever is smaller, but not less than either 4% of least horizontal dimension or 3 ft (0.9 m). If an overhang exists, the edge distance shall be measured from the outside edge of the overhang. The horizontal dimensions used to compute the edge distance shall not include any overhang distances.
B = Horizontal dimension of building measured normal to wind direction, in ft (m).
h = Mean roof height, in ft (m).
θ = Angle of plane of roof from horizontal, in degrees.

External Pressure Coefficients

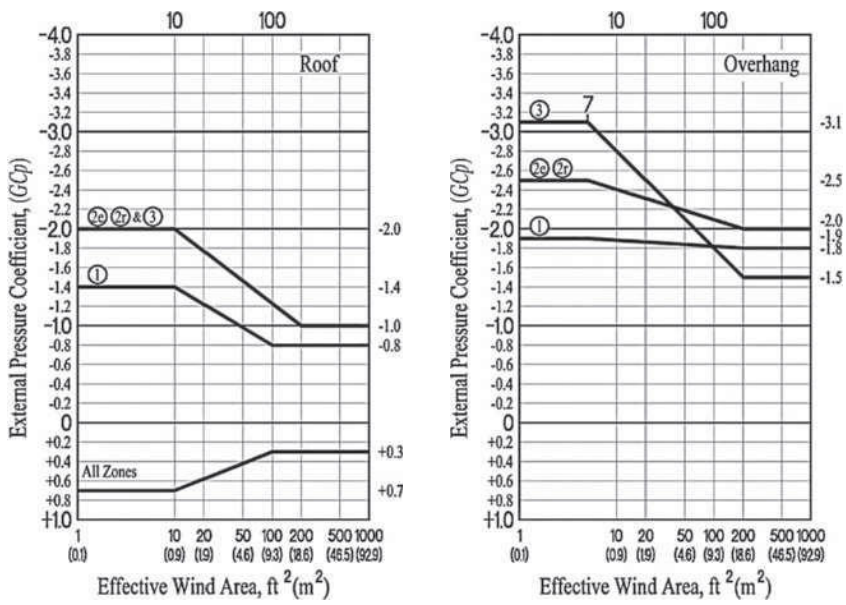

Notes

1. Vertical scale denotes (GCp) to be used with q_h.
2. Horizontal scale denotes effective wind area, in ft^2 (m^2).
3. Plus and minus signs signify pressures acting toward and away from the surfaces, respectively.
4. Each component shall be designed for maximum positive and negative pressures.
5. Values of (GCp) for roof overhangs include pressure contributions from both upper and lower surfaces.
6. If overhangs exist, the lesser horizontal dimension of the building shall not include any overhang dimension, but the edge distance, a, shall be measured from the outside edge of the overhang.

FIGURE 30.3-2G Components and Cladding [$h \leq 60$ ft ($h \leq 18.3$ m)]: External Pressure Coefficients, (GC_p), for Enclosed and Partially Enclosed Buildings—Hip Roofs, 20° < θ ≤ 27° (Roof and Overhang)

Roof Areas Per SML Tables	Roof Zones Per ASCE 7-16
1	1
2	2e, 2r
3	3

Diagrams

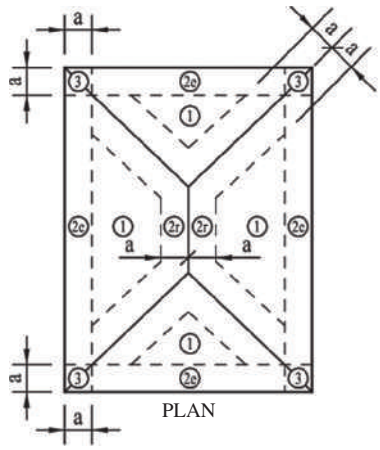

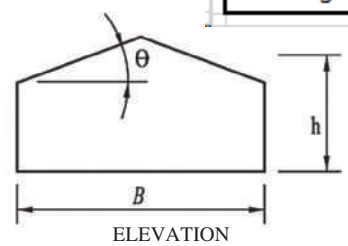

Notation

a = 10% of least horizontal dimension or 0.4h, whichever is smaller, but not less than either 4% of least horizontal dimension or 3 ft (0.9 m). If an overhang exists, the edge distance shall be measured from the outside edge of the overhang. The horizontal dimensions used to compute the edge distance shall not include any overhang distances.

B = Horizontal dimension of building measured normal to wind direction, in ft (m).

h = Mean roof height, in ft (m).

θ = Angle of plane of roof from horizontal, in degrees.

External Pressure Coefficients

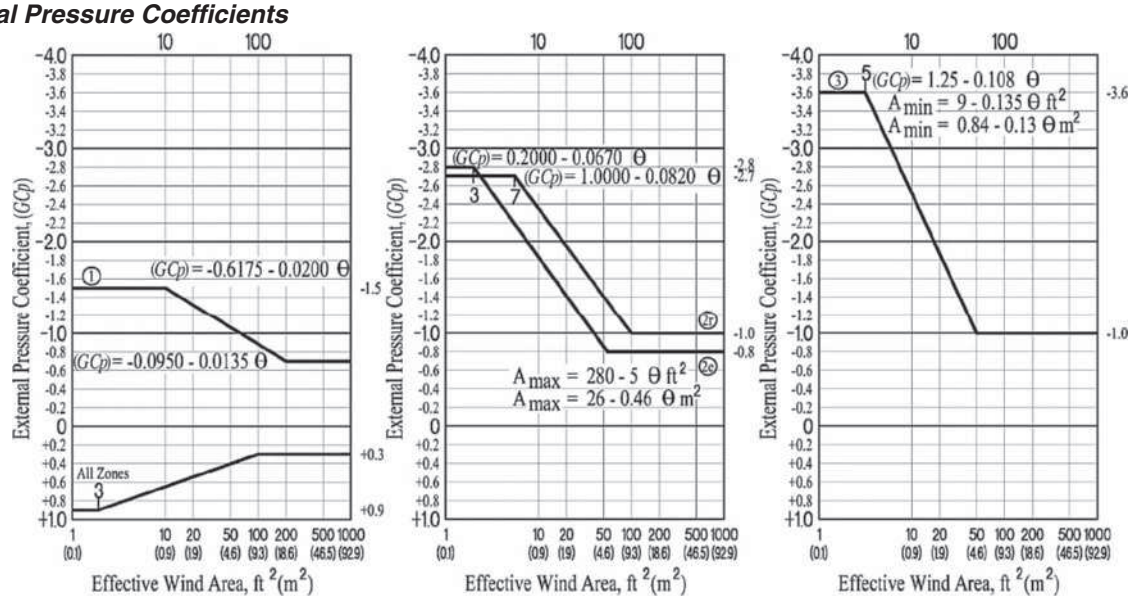

Notes

1. Vertical scale denotes (GCp) to be used with q_h.
2. Horizontal scale denotes effective wind area, in ft^2 (m^2).
3. Plus and minus signs signify pressures acting toward and away from the surfaces, respectively.
4. Each component shall be designed for maximum positive and negative pressures.
5. If overhangs exist, the lesser horizontal dimension of the building shall not include any overhang dimension, but the edge distance, a, shall be measured from the outside edge of the overhang.
7. A_{min} = the minimum tributary area (i.e., areas less than A_{min} are to use (GCp) value for A_{min}).
8. A_{max} = the maximum tributary area (i.e., areas greater than A_{max} are to use (GCp) value for A_{max}).
9. (GCp) values given for roof slope, θ = 45°; for other slopes use the equations.

FIGURE 30.3-2H Components and Cladding [$h \leq 60$ ft ($h \leq 18.3$ m)]: External Pressure Coefficients, (GC_p), for Enclosed and Partially Enclosed Buildings—Hip Roofs, 27° < θ ≤ 45° (Roof)

TAMARACK SOLAR PRODUCTS

FLUSH MOUNT

SOLAR MOUNTING SYSTEM

SHOWING SYSTEM RAILS, SPLICES
MOUNTS, 5050 MODULE CLAMPS (WORK IN MID OR END CONDITION),
AND CHANNEL END CLAMPS.

SHOWN WITH L FOOT MOUNT, BUT MOUNT CAN BE INTERCHANGED WITH MOST TYPICAL MOUNTS ON THE MARKET WITH A VERTICAL LEVELING SLOT INCLUDING TILE ROOF HOOKS.

TORQUE ALL FASTENERS TO 12 FT-LBS

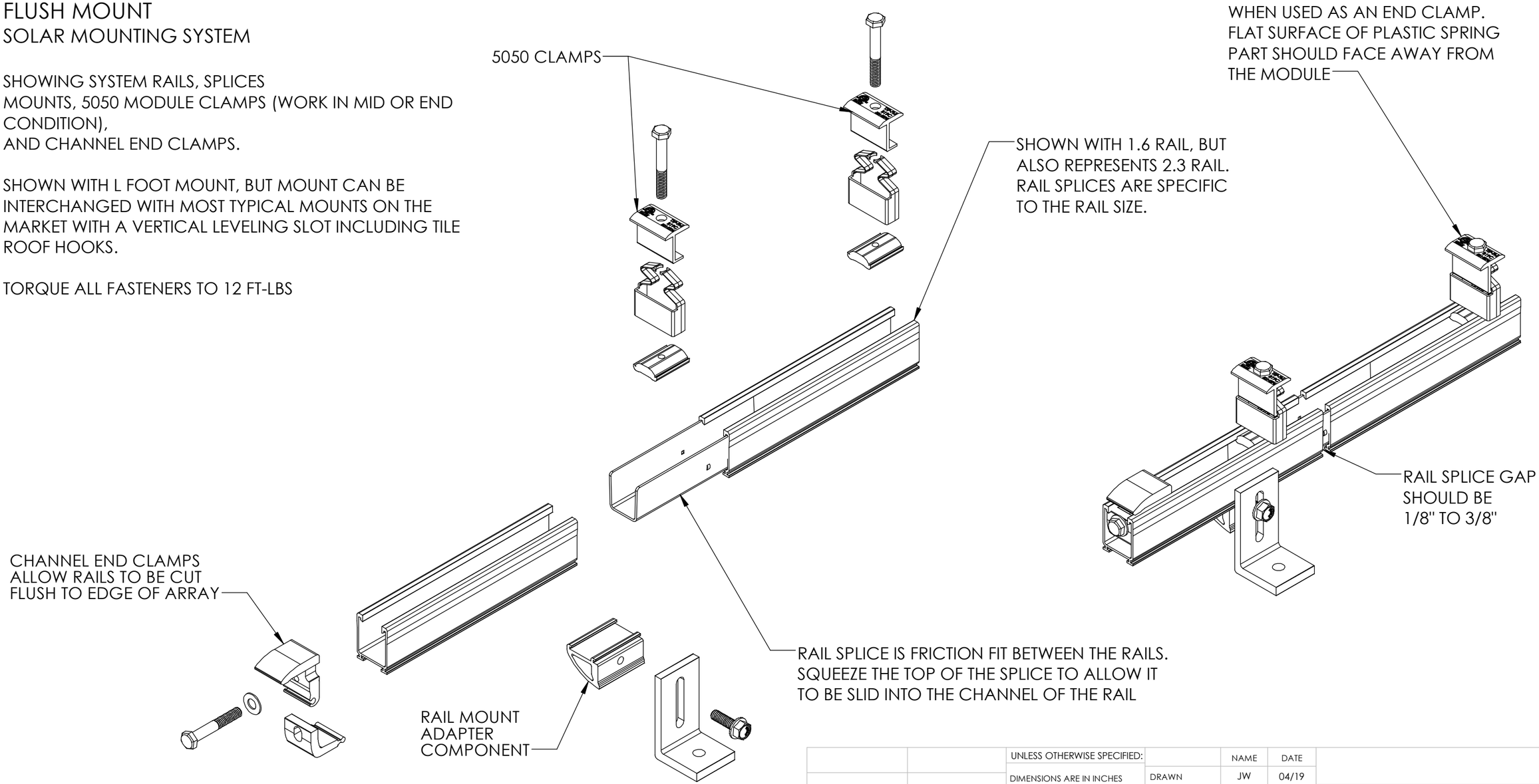

PROPRIETARY AND CONFIDENTIAL

THE INFORMATION CONTAINED IN THIS DRAWING IS THE SOLE PROPERTY OF <INSERT COMPANY NAME HERE>. ANY REPRODUCTION IN PART OR AS A WHOLE WITHOUT THE WRITTEN PERMISSION OF <INSERT COMPANY NAME HERE> IS PROHIBITED.

NEXT ASSY	USED ON
APPLICATION	

UNLESS OTHERWISE SPECIFIED:

DIMENSIONS ARE IN INCHES
TOLERANCES:
FRACTIONAL ±
ANGULAR: MACH ± BEND ±
TWO PLACE DECIMAL ±
THREE PLACE DECIMAL ±

INTERPRET GEOMETRIC TOLERANCING PER:

MATERIAL

FINISH

DO NOT SCALE DRAWING

	NAME	DATE
DRAWN	JW	04/19
CHECKED	DK	04/19
ENG APPR.		
MFG APPR.		
Q.A.		

COMMENTS:

TITLE:

System Components Detail

SIZE	DWG. NO.	REV
B	FM-D01	

SCALE: 1:4 WEIGHT: SHEET 1 OF 1

TAMARACK SOLAR PRODUCTS

FLUSH MOUNT

SOLAR MOUNTING SYSTEM

SHOWING TYPICAL ROOF LAYOUT WITH SPANS AND OVERHANGS

SHOWN WITH L FOOT MOUNT, BUT MOUNT CAN BE INTERCHANGED WITH MOST TYPICAL MOUNTS ON THE MARKET WITH A VERTICAL LEVELING SLOT INCLUDING TILE ROOF HOOKS.

TORQUE ALL FASTENERS TO 12 FT-LBS

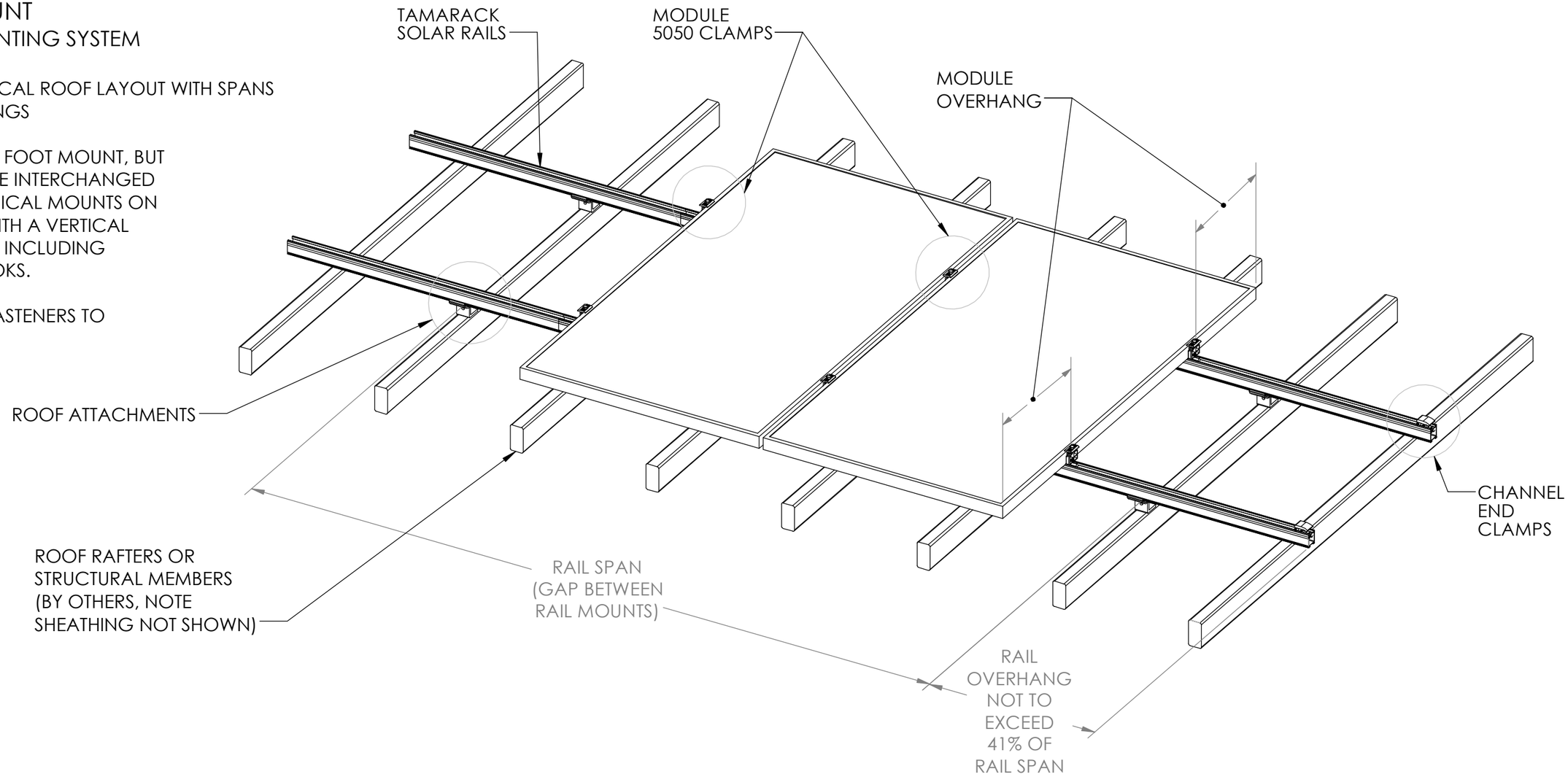

PROPRIETARY AND CONFIDENTIAL

THE INFORMATION CONTAINED IN THIS DRAWING IS THE SOLE PROPERTY OF <INSERT COMPANY NAME HERE>. ANY REPRODUCTION IN PART OR AS A WHOLE WITHOUT THE WRITTEN PERMISSION OF <INSERT COMPANY NAME HERE> IS PROHIBITED.

NEXT ASSY	USED ON
APPLICATION	

UNLESS OTHERWISE SPECIFIED:

DIMENSIONS ARE IN INCHES
TOLERANCES:
FRACTIONAL ±
ANGULAR: MACH ± BEND ±
TWO PLACE DECIMAL ±
THREE PLACE DECIMAL ±

INTERPRET GEOMETRIC TOLERANCING PER:

MATERIAL

FINISH

DO NOT SCALE DRAWING

	NAME	DATE
DRAWN	JW	04/19
CHECKED	DK	04/19
ENG APPR.		
MFG APPR.		
Q.A.		

COMMENTS:

TITLE:

System Layout Detail

SIZE	DWG. NO.	REV
B	FM-D02	

SCALE: 1:4 WEIGHT: SHEET 1 OF 1

TAMARACK SOLAR PRODUCTS

FLUSH MOUNT

SOLAR MOUNTING SYSTEM

MODULE CLAMP DETAILS

5050 CLAMPS CAN BE INSTALLED IN EITHER MID OR END CLAMP CONDITIONS AS SHOWN. HALF INCH MODULE GAP. IN END CONDITION OPEN SIDE OF PLASTIC SPRING SHOULD FACE IN TO THE MODULE AS SHOWN

CHANNEL END CLAMPS INSTALL IN THE RAIL CHANNEL AND ALLOW THE MODULE FRAMES TO BE FLUSH TO THE END OF THE MOUNTING RAILS

TORQUE ALL FASTENERS TO 12 FT-LBS

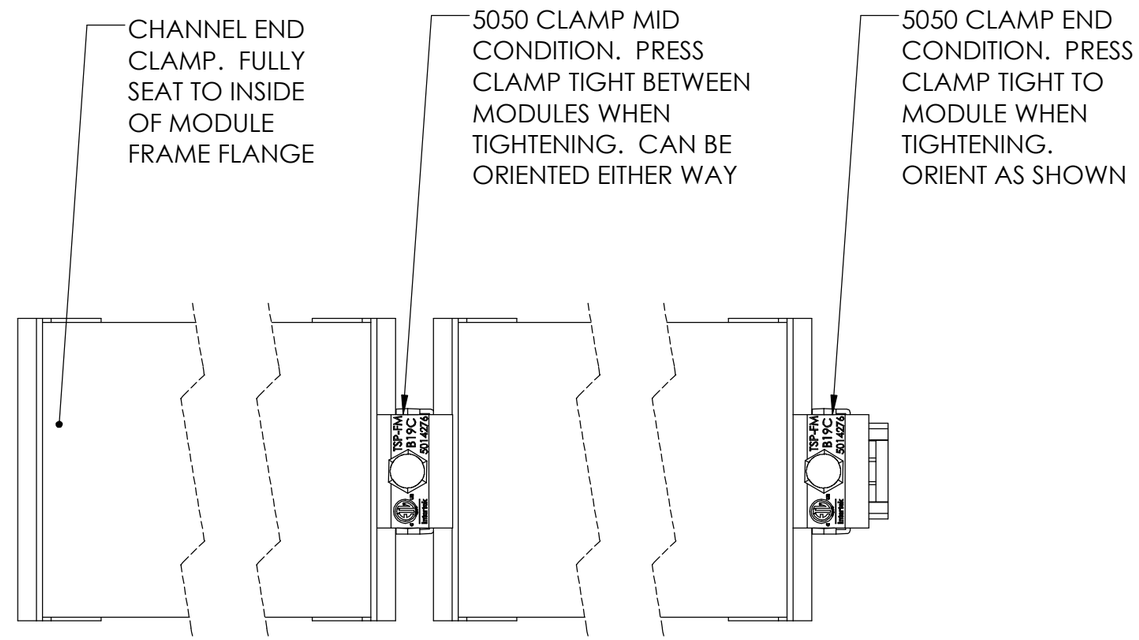

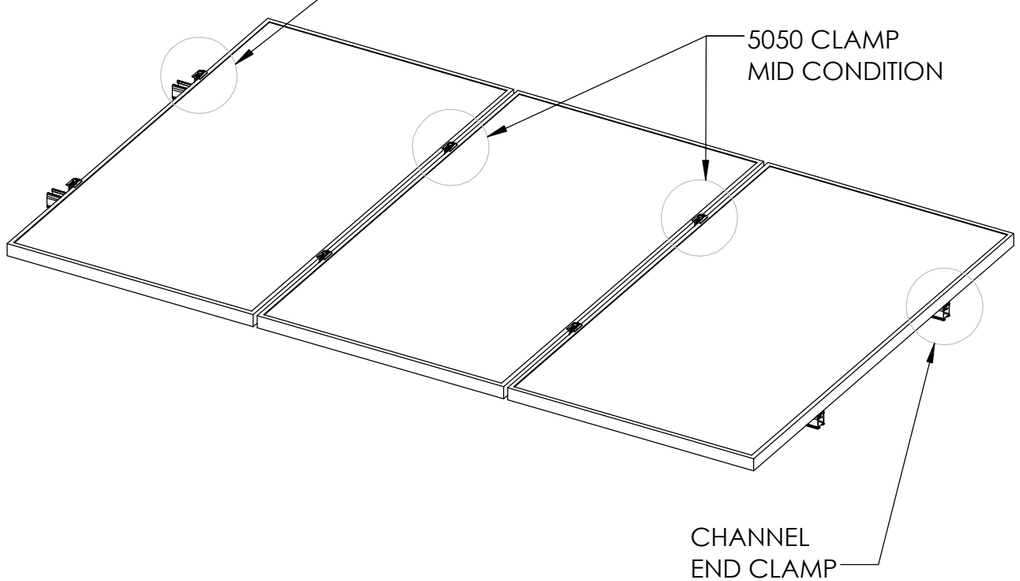

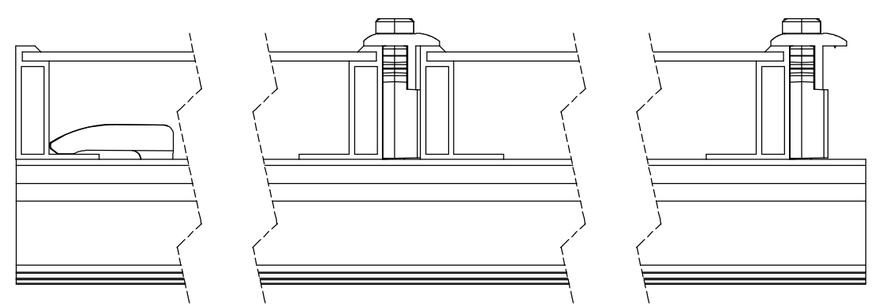

PROPRIETARY AND CONFIDENTIAL

THE INFORMATION CONTAINED IN THIS DRAWING IS THE SOLE PROPERTY OF <INSERT COMPANY NAME HERE>. ANY REPRODUCTION IN PART OR AS A WHOLE WITHOUT THE WRITTEN PERMISSION OF <INSERT COMPANY NAME HERE> IS PROHIBITED.

NEXT ASSY	USED ON
APPLICATION	

UNLESS OTHERWISE SPECIFIED:

DIMENSIONS ARE IN INCHES
TOLERANCES:
FRACTIONAL ±
ANGULAR: MACH ± BEND ±
TWO PLACE DECIMAL ±
THREE PLACE DECIMAL ±

INTERPRET GEOMETRIC TOLERANCING PER:

MATERIAL

FINISH

DO NOT SCALE DRAWING

	NAME	DATE
DRAWN	JW	04/19
CHECKED	DK	04/19
ENG APPR.		
MFG APPR.		
Q.A.		

COMMENTS:

TITLE:

Module Clamp Detail

SIZE	DWG. NO.	REV
B	FM-D03	

SCALE: 1:4 WEIGHT: SHEET 1 OF 1