Starling Madison Lofquist, Inc.
Consulting Structural and Forensic Engineers
3600 E. University Dr. Suite 1400, Phoenix, Arizona 85034
tel: (602) 438-2500 fax: (602) 438-2505 ROC#291316 www.smleng.com

Tamarack Solar
288 F Street
Arcata, CA 95521

January 1, 2021

Attn: Mr. David Katz

Subject: Tamarack 2.3 Rail, Roof Flush Mounting System – Structural Analysis

Dear Sir:

We have analyzed the Tamarack 2.3 Rail for the subject solar module support system and determined that, for the configurations and criteria described below, it is in compliance with the applicable sections of the following Reference Documents:

Codes: ASCE/SEI 7-16 Min. Design Loads for Buildings & Other Structures
International Building Code 2018 Edition
Other: AC428, Acceptance Criteria for Modular Framing Systems Used to Support PV Modules, dated Effective November 1, 2012 by ICC-ES
Aluminum Design Manual, 2015 Edition (ADM)

The Tamarack 2.3 Rail is an extruded aluminum section with an overall depth of 2.3 in. and a net area of 0.444sq.in. The rails are used to support solar PV modules, typically, on the roof of a building. See Exhibit FM-D01 through FM-D03. The PV modules are attached to the rails by the Tamarack mounting clamps as shown in the attached Exhibit. The rails are mounted with a small clearance (flush mounting) and are installed at same slope as the underlying roof structure. The rails are attached to typical solar roof mounting hardware (by others) which typically are comprised of a vertical mounting surface with a slotted hole. The bottom of the rails is attached using the Tamarack Rail Mount Adapter, which locks the rail to the vertical surface upon tightening the connection. The solar roof mounting hardware and its attachment to the roof framing are not within the scope of this letter and should be reviewed and approved by others.

All loads are transferred to the roof framing through the angle brackets by simple bi-axial flexure of the rails. The maximum span of the rails is governed by either the mid-span flexural stresses or the deflection requirement that the rail not come into contact with the roof.

The testing data provided by Tamarack Solar, dated February 19th, 2019, was performed at the Tamarack facilities and tests were third party observed by Starling Madison Lofquist, Inc. The failure modes for the tests performed were aluminum base material or fastener components failure. Maximum allowable values for these failure conditions were derived using a safety factor of 1.95 per ADM on the ultimate loads provided by the testing.

The effect of seismic loads (for all design categories A-F) have been determined to be less than the effect due to wind loads in all load conditions and combinations. Therefore, the maximum allowable spans for common load cases are shown in the tables below.

The user of this certification letter shall obtain the following criteria to utilize Tables T1-T24:

- Wind Speed
- Ground Snow Load
- Exposure Category
- Panel Orientation (Landscape or Portrait). Refer to Tamarack Installation Manual for Example.
- Building Height
- Roof Slope
- Roof Type (Gable Roof or Hip Roof)
- Roof Zone. Determined in Accordance with ASCE 7-16, Figure 30.3-2A through Figure 30.3-2I.

The wind speed, ground snow load, and exposure category may be obtained from the Authority Having Jurisdiction (AJH) in their local area. The AHJ may be the local building department, county building department, or government entity responsible for planning and development. Once all the design criteria has been selected, the user shall submit the first 3 pages of this document, the pages corresponding to the correct Roof Type (pages 52-55 or 92-94), and page 95, along with the appropriate Table and Exhibits to the AHJ as part of the permit application.

The following tables have been formatted to group similar ASCE 7-16 Roof Zones for various roof angles and roof type (gable or hip) into Roof Areas as designated at the top of every table. Conversion diagrams have been included at the end of each Roof Type section to show which Roof Zones correspond to the respective Roof Area. Pages 52-55 show the conversion diagrams for the Gable Roof and pages 92-94 show the conversion diagrams for the Hip Roof.

For the "Portrait" load tables, two values are shown in each cell. The first number in the cell indicates the maximum span for the rail for a 60-cell module (68 inches x 42 inches maximum). The second number indicates the maximum span of the rail for a 72-cell module (80 inches x 40 inches maximum). The "Landscape" load tables only have one value in each cell, as the difference in span between 60-cell and 72-cell modules is negligible.

Geometry	**Table No.**
Roof Type - Gable:	
Roof Area 1 – Landscape – Building Height 15ft	T1a – T1d
Roof Area 1 – Landscape – Building Height 30ft	T2a – T2d
Roof Area 1 – Portrait – Building Height 15ft	T3a – T3d
Roof Area 1 – Portrait – Building Height 30ft	T4a – T4d
Roof Area 2 – Landscape – Building Height 15ft	T5a – T5d
Roof Area 2 – Landscape – Building Height 30ft	T6a – T6d
Roof Area 2 – Portrait – Building Height 15ft	T7a – T7d
Roof Area 2 – Portrait – Building Height 30ft	T8a – T8d
Roof Area 3 – Landscape – Building Height 15ft	T9a – T9d
Roof Area 3 – Landscape – Building Height 30ft	T10a – T10d
Roof Area 3 – Portrait – Building Height 15ft	T11a – T11d
Roof Area 3 – Portrait – Building Height 30ft	T12a – T12d
Roof Type - Hip:	
Roof Area 1 – Landscape – Building Height 15ft	T13a – T13c
Roof Area 1 – Landscape – Building Height 30ft	T14a – T14c
Roof Area 1 – Portrait – Building Height 15ft	T15a – T15c
Roof Area 1 – Portrait – Building Height 30ft	T16a – T16c
Roof Area 2 – Landscape – Building Height 15ft	T17a – T17c
Roof Area 2 – Landscape – Building Height 30ft	T18a – T18c
Roof Area 2 – Portrait – Building Height 15ft	T19a – T19c
Roof Area 2 – Portrait – Building Height 30ft	T20a – T20c
Roof Area 3 – Landscape – Building Height 15ft	T21a – T21c
Roof Area 3 – Landscape – Building Height 30ft	T22a – T22c
Roof Area 3 – Portrait – Building Height 15ft	T23a – T23c
Roof Area 3 – Portrait – Building Height 30ft	T24a – T24c

T1a	Gable - Maximum Span (in) for Roof Slope 0° - 7° & Roof Area 1											H=15
Landscape		Wind Speed (mph)										
Exposure	Snow Load (psf)	100	105	110	115	120	130	140	150	160	170	180
B	0	96	96	96	96	96	96	96	96	93	87	82
	5	96	96	96	96	96	96	96	96	93	87	82
	10	96	96	96	96	96	96	96	96	93	87	82
	15	88	88	88	88	88	88	88	88	88	87	82
	20	81	81	81	81	81	81	81	81	81	81	81
	25	79	79	79	79	79	79	79	79	79	79	79
	30	75	75	75	75	75	75	75	75	75	75	75
	35	70	70	70	70	70	70	70	70	70	70	70
	40	65	65	65	65	65	65	65	65	65	65	65
	45	62	62	62	62	62	62	62	62	62	62	62
	50	59	59	59	59	59	59	59	59	59	59	59
	55	56	56	56	56	56	56	56	56	56	56	56
	60	54	54	54	54	54	54	54	54	54	54	54
	70	50	50	50	50	50	50	50	50	50	50	50
	80	47	47	47	47	47	47	47	47	47	47	47
	90	44	44	44	44	44	44	44	44	44	44	44
	100	42	42	42	42	42	42	42	42	42	42	42
	110	40	40	40	40	40	40	40	40	40	40	40
	120	38	38	38	38	38	38	38	38	38	38	38
C	0	96	96	96	96	96	95	87	81	75	70	66
	5	96	96	96	96	96	95	87	81	75	70	66
	10	96	96	96	96	96	95	87	81	75	70	66
	15	88	88	88	88	88	88	87	81	75	70	66
	20	81	81	81	81	81	81	81	81	75	70	66
	25	79	79	79	79	79	79	79	79	75	70	66
	30	75	75	75	75	75	75	75	75	75	70	66
	35	70	70	70	70	70	70	70	70	70	70	66
	40	65	65	65	65	65	65	65	65	65	65	65
	45	62	62	62	62	62	62	62	62	62	62	62
	50	59	59	59	59	59	59	59	59	59	59	59
	55	56	56	56	56	56	56	56	56	56	56	56
	60	54	54	54	54	54	54	54	54	54	54	54
	70	50	50	50	50	50	50	50	50	50	50	50
	80	47	47	47	47	47	47	47	47	47	47	47
	90	44	44	44	44	44	44	44	44	44	44	44
	100	42	42	42	42	42	42	42	42	42	42	42
	110	40	40	40	40	40	40	40	40	40	40	40
	120	38	38	38	38	38	38	38	38	38	38	38
D	0	96	96	96	96	93	85	78	73	68	63	60
	5	96	96	96	96	93	85	78	73	68	63	60
	10	96	96	96	96	93	85	78	73	68	63	60
	15	88	88	88	88	88	85	78	73	68	63	60
	20	81	81	81	81	81	81	78	73	68	63	60
	25	79	79	79	79	79	79	78	73	68	63	60
	30	75	75	75	75	75	75	75	73	68	63	60
	35	70	70	70	70	70	70	70	70	68	63	60
	40	65	65	65	65	65	65	65	65	65	63	60
	45	62	62	62	62	62	62	62	62	62	62	60
	50	59	59	59	59	59	59	59	59	59	59	59
	55	56	56	56	56	56	56	56	56	56	56	56
	60	54	54	54	54	54	54	54	54	54	54	54
	70	50	50	50	50	50	50	50	50	50	50	50
	80	47	47	47	47	47	47	47	47	47	47	47
	90	44	44	44	44	44	44	44	44	44	44	44
	100	42	42	42	42	42	42	42	42	42	42	42
	110	40	40	40	40	40	40	40	40	40	40	40
	120	38	38	38	38	38	38	38	38	38	38	38

Notes – see page 52-55, and 95

T1b	Gable - Maximum Span (in) for Roof Slope 7° - 20° & Roof Area 1											H=15
Landscape		Wind Speed (mph)										
Exposure	Snow Load (psf)	100	105	110	115	120	130	140	150	160	170	180
B	0	96	96	96	96	96	96	95	88	83	78	73
	5	96	96	96	96	96	96	95	88	83	78	73
	10	94	94	94	94	94	94	94	88	83	78	73
	15	84	84	84	84	84	84	84	84	83	78	73
	20	77	77	77	77	77	77	77	77	77	77	73
	25	73	73	73	73	73	73	73	73	73	73	73
	30	68	68	68	68	68	68	68	68	68	68	68
	35	63	63	63	63	63	63	63	63	63	63	63
	40	59	59	59	59	59	59	59	59	59	59	59
	45	56	56	56	56	56	56	56	56	56	56	56
	50	53	53	53	53	53	53	53	53	53	53	53
	55	51	51	51	51	51	51	51	51	51	51	51
	60	49	49	49	49	49	49	49	49	49	49	49
	70	45	45	45	45	45	45	45	45	45	45	45
	80	43	43	43	43	43	43	43	43	43	43	43
	90	40	40	40	40	40	40	40	40	40	40	40
	100	38	38	38	38	38	38	38	38	38	38	38
	110	36	36	36	36	36	36	36	36	36	36	36
	120	35	35	35	35	35	35	35	35	35	35	35
C	0	96	96	96	95	91	84	78	73	68	64	60
	5	96	96	96	95	91	84	78	73	68	64	60
	10	94	94	94	94	91	84	78	73	68	64	60
	15	84	84	84	84	84	84	78	73	68	64	60
	20	77	77	77	77	77	77	77	73	68	64	60
	25	73	73	73	73	73	73	73	73	68	64	60
	30	68	68	68	68	68	68	68	68	68	64	60
	35	63	63	63	63	63	63	63	63	63	63	60
	40	59	59	59	59	59	59	59	59	59	59	59
	45	56	56	56	56	56	56	56	56	56	56	56
	50	53	53	53	53	53	53	53	53	53	53	53
	55	51	51	51	51	51	51	51	51	51	51	51
	60	49	49	49	49	49	49	49	49	49	49	49
	70	45	45	45	45	45	45	45	45	45	45	45
	80	43	43	43	43	43	43	43	43	43	43	43
	90	40	40	40	40	40	40	40	40	40	40	40
	100	38	38	38	38	38	38	38	38	38	38	38
	110	36	36	36	36	36	36	36	36	36	36	36
	120	35	35	35	35	35	35	35	35	35	35	35
D	0	96	94	90	86	82	76	71	66	62	*	*
	5	96	94	90	86	82	76	71	66	62	*	*
	10	94	94	90	86	82	76	71	66	62	*	*
	15	84	84	84	84	82	76	71	66	62	*	*
	20	77	77	77	77	77	76	71	66	62	*	*
	25	73	73	73	73	73	73	71	66	62	*	*
	30	68	68	68	68	68	68	68	66	62	*	*
	35	63	63	63	63	63	63	63	63	62	*	*
	40	59	59	59	59	59	59	59	59	59	*	*
	45	56	56	56	56	56	56	56	56	56	*	*
	50	53	53	53	53	53	53	53	53	53	*	*
	55	51	51	51	51	51	51	51	51	51	*	*
	60	49	49	49	49	49	49	49	49	49	*	*
	70	45	45	45	45	45	45	45	45	45	*	*
	80	43	43	43	43	43	43	43	43	43	*	*
	90	40	40	40	40	40	40	40	40	40	*	*
	100	38	38	38	38	38	38	38	38	38	*	*
	110	36	36	36	36	36	36	36	36	36	*	*
	120	35	35	35	35	35	35	35	35	35	*	*

Notes – see page 52-55, and 95

T1c	Gable - Maximum Span (in) for Roof Slope 20° - 27° & Roof Area 1											H=15
Landscape		Wind Speed (mph)										
Exposure	Snow Load (psf)	100	105	110	115	120	130	140	150	160	170	180
B	0	96	96	96	96	96	96	96	96	95	89	85
	5	96	96	96	96	96	96	96	96	95	89	85
	10	95	95	95	95	95	95	95	95	95	89	85
	15	87	87	87	87	87	87	87	87	87	87	85
	20	81	81	81	81	81	81	81	81	81	81	81
	25	75	75	75	75	75	75	75	75	75	75	75
	30	70	70	70	70	70	70	70	70	70	70	70
	35	66	66	66	66	66	66	66	66	66	66	66
	40	62	62	62	62	62	62	62	62	62	62	62
	45	59	59	59	59	59	59	59	59	59	59	59
	50	56	56	56	56	56	56	56	56	56	56	56
	55	53	53	53	53	53	53	53	53	53	53	53
	60	51	51	51	51	51	51	51	51	51	51	51
	70	48	48	48	48	48	48	48	48	48	48	48
	80	45	45	45	45	45	45	45	45	45	45	45
	90	42	42	42	42	42	42	42	42	42	42	42
	100	40	40	40	40	40	40	40	40	40	40	40
	110	38	38	38	38	38	38	38	38	38	38	38
	120	36	36	36	36	36	36	36	36	36	36	36
C	0	96	96	96	96	96	96	89	83	78	74	69
	5	96	96	96	96	96	96	89	83	78	74	69
	10	95	95	95	95	95	95	89	83	78	74	69
	15	87	87	87	87	87	87	87	83	78	74	69
	20	81	81	81	81	81	81	81	81	78	74	69
	25	75	75	75	75	75	75	75	75	75	74	69
	30	70	70	70	70	70	70	70	70	70	70	69
	35	66	66	66	66	66	66	66	66	66	66	66
	40	62	62	62	62	62	62	62	62	62	62	62
	45	59	59	59	59	59	59	59	59	59	59	59
	50	56	56	56	56	56	56	56	56	56	56	56
	55	53	53	53	53	53	53	53	53	53	53	53
	60	51	51	51	51	51	51	51	51	51	51	51
	70	48	48	48	48	48	48	48	48	48	48	48
	80	45	45	45	45	45	45	45	45	45	45	45
	90	42	42	42	42	42	42	42	42	42	42	42
	100	40	40	40	40	40	40	40	40	40	40	40
	110	38	38	38	38	38	38	38	38	38	38	38
	120	36	36	36	36	36	36	36	36	36	36	36
D	0	96	96	96	96	95	87	81	76	71	67	63
	5	96	96	96	96	95	87	81	76	71	67	63
	10	95	95	95	95	95	87	81	76	71	67	63
	15	87	87	87	87	87	87	81	76	71	67	63
	20	81	81	81	81	81	81	81	76	71	67	63
	25	75	75	75	75	75	75	75	75	71	67	63
	30	70	70	70	70	70	70	70	70	69	67	63
	35	66	66	66	66	66	66	66	66	66	65	63
	40	62	62	62	62	62	62	62	62	62	62	61
	45	59	59	59	59	59	59	59	59	59	59	59
	50	56	56	56	56	56	56	56	56	56	56	56
	55	53	53	53	53	53	53	53	53	53	53	53
	60	51	51	51	51	51	51	51	51	51	51	51
	70	48	48	48	48	48	48	48	48	48	48	48
	80	45	45	45	45	45	45	45	45	45	45	45
	90	42	42	42	42	42	42	42	42	42	42	42
	100	40	40	40	40	40	40	40	40	40	40	40
	110	38	38	38	38	38	38	38	38	38	38	38
	120	36	36	36	36	36	36	36	36	36	36	36

Notes – see page 52-55, and 95

T1d	Gable - Maximum Span (in) for Roof Slope 27° - 45° & Roof Area 1											H=15
Landscape		Wind Speed (mph)										
Exposure	Snow Load (psf)	100	105	110	115	120	130	140	150	160	170	180
B	0	96	96	96	96	96	96	96	94	87	82	77
	5	96	96	96	96	96	96	96	94	87	82	77
	10	96	96	96	96	96	96	96	94	87	82	77
	15	89	89	89	89	89	89	89	89	87	82	77
	20	82	82	82	82	82	82	82	82	81	79	77
	25	77	77	77	77	77	77	77	77	76	75	73
	30	73	73	73	73	73	73	73	73	72	71	70
	35	68	68	68	68	68	68	68	68	68	67	66
	40	65	65	65	65	65	65	65	65	65	65	64
	45	61	61	61	61	61	61	61	61	61	61	61
	50	58	58	58	58	58	58	58	58	58	58	58
	55	56	56	56	56	56	56	56	56	56	56	56
	60	54	54	54	54	54	54	54	54	54	54	54
	70	50	50	50	50	50	50	50	50	50	50	50
	80	47	47	47	47	47	47	47	47	47	47	47
	90	44	44	44	44	44	44	44	44	44	44	44
	100	42	42	42	42	42	42	42	42	42	42	42
	110	40	40	40	40	40	40	40	40	40	40	40
	120	38	38	38	38	38	38	38	38	38	38	38
C	0	96	96	96	96	96	88	82	76	70	66	63
	5	96	96	96	96	96	88	82	76	70	66	63
	10	96	96	96	96	96	88	82	76	70	66	63
	15	89	89	89	89	89	87	82	76	70	66	63
	20	82	82	82	82	82	81	79	76	70	66	63
	25	77	77	77	77	77	76	75	73	70	66	63
	30	73	73	73	73	73	72	71	69	68	66	63
	35	68	68	68	68	68	68	67	66	65	64	63
	40	65	65	65	65	65	65	65	64	62	61	60
	45	61	61	61	61	61	61	61	61	60	59	58
	50	58	58	58	58	58	58	58	58	58	57	56
	55	56	56	56	56	56	56	56	56	56	55	55
	60	54	54	54	54	54	54	54	54	54	54	53
	70	50	50	50	50	50	50	50	50	50	50	50
	80	47	47	47	47	47	47	47	47	47	47	47
	90	44	44	44	44	44	44	44	44	44	44	44
	100	42	42	42	42	42	42	42	42	42	42	42
	110	40	40	40	40	40	40	40	40	40	40	40
	120	38	38	38	38	38	38	38	38	38	38	38
D	0	96	96	95	91	87	80	73	68	64	60	57
	5	96	96	95	91	87	80	73	68	64	60	57
	10	96	96	95	91	87	80	73	68	64	60	57
	15	89	89	89	88	87	80	73	68	64	60	57
	20	82	82	82	82	81	79	73	68	64	60	57
	25	77	77	77	77	76	74	72	68	64	60	57
	30	73	73	73	73	72	70	69	67	64	60	*
	35	68	68	68	68	68	67	66	64	63	60	*
	40	65	65	65	65	65	64	63	62	61	60	*
	45	61	61	61	61	61	61	61	60	59	57	*
	50	58	58	58	58	58	58	58	58	57	56	*
	55	56	56	56	56	56	56	56	56	55	54	*
	60	54	54	54	54	54	54	54	54	53	52	*
	70	50	50	50	50	50	50	50	50	50	50	*
	80	47	47	47	47	47	47	47	47	47	47	*
	90	44	44	44	44	44	44	44	44	44	44	*
	100	42	42	42	42	42	42	42	42	42	42	*
	110	40	40	40	40	40	40	40	40	40	40	*
	120	38	38	38	38	38	38	38	38	38	38	*

Notes – see page 52-55, and 95

T2a	Gable - Maximum Span (in) for Roof Slope 0° - 7° & Roof Area 1											H=30
Landscape		Wind Speed (mph)										
Exposure	Snow Load (psf)	100	105	110	115	120	130	140	150	160	170	180
B	0	96	96	96	96	96	96	96	90	84	78	73
	5	96	96	96	96	96	96	96	90	84	78	73
	10	96	96	96	96	96	96	96	90	84	78	73
	15	88	88	88	88	88	88	88	88	84	78	73
	20	81	81	81	81	81	81	81	81	81	78	73
	25	79	79	79	79	79	79	79	79	79	78	73
	30	75	75	75	75	75	75	75	75	75	75	73
	35	70	70	70	70	70	70	70	70	70	70	70
	40	65	65	65	65	65	65	65	65	65	65	65
	45	62	62	62	62	62	62	62	62	62	62	62
	50	59	59	59	59	59	59	59	59	59	59	59
	55	56	56	56	56	56	56	56	56	56	56	56
	60	54	54	54	54	54	54	54	54	54	54	54
	70	50	50	50	50	50	50	50	50	50	50	50
	80	47	47	47	47	47	47	47	47	47	47	47
	90	44	44	44	44	44	44	44	44	44	44	44
	100	42	42	42	42	42	42	42	42	42	42	42
	110	40	40	40	40	40	40	40	40	40	40	40
	120	38	38	38	38	38	38	38	38	38	38	38
C	0	96	96	96	96	96	87	80	75	69	65	61
	5	96	96	96	96	96	87	80	75	69	65	61
	10	96	96	96	96	96	87	80	75	69	65	61
	15	88	88	88	88	88	87	80	75	69	65	61
	20	81	81	81	81	81	81	80	75	69	65	61
	25	79	79	79	79	79	79	79	75	69	65	61
	30	75	75	75	75	75	75	75	75	69	65	61
	35	70	70	70	70	70	70	70	70	69	65	61
	40	65	65	65	65	65	65	65	65	65	65	61
	45	62	62	62	62	62	62	62	62	62	62	61
	50	59	59	59	59	59	59	59	59	59	59	59
	55	56	56	56	56	56	56	56	56	56	56	56
	60	54	54	54	54	54	54	54	54	54	54	54
	70	50	50	50	50	50	50	50	50	50	50	50
	80	47	47	47	47	47	47	47	47	47	47	47
	90	44	44	44	44	44	44	44	44	44	44	44
	100	42	42	42	42	42	42	42	42	42	42	42
	110	40	40	40	40	40	40	40	40	40	40	40
	120	38	38	38	38	38	38	38	38	38	38	38
D	0	96	96	96	91	87	80	73	68	64	60	*
	5	96	96	96	91	87	80	73	68	64	60	*
	10	96	96	96	91	87	80	73	68	64	60	*
	15	88	88	88	88	87	80	73	68	64	60	*
	20	81	81	81	81	81	80	73	68	64	60	*
	25	79	79	79	79	79	79	73	68	64	60	*
	30	75	75	75	75	75	75	73	68	64	60	*
	35	70	70	70	70	70	70	70	68	64	60	*
	40	65	65	65	65	65	65	65	65	64	60	*
	45	62	62	62	62	62	62	62	62	62	60	*
	50	59	59	59	59	59	59	59	59	59	59	*
	55	56	56	56	56	56	56	56	56	56	56	*
	60	54	54	54	54	54	54	54	54	54	54	*
	70	50	50	50	50	50	50	50	50	50	50	*
	80	47	47	47	47	47	47	47	47	47	47	*
	90	44	44	44	44	44	44	44	44	44	44	*
	100	42	42	42	42	42	42	42	42	42	42	*
	110	40	40	40	40	40	40	40	40	40	40	*
	120	38	38	38	38	38	38	38	38	38	38	*

Notes – see page 52-55, and 95

T2b	Gable - Maximum Span (in) for Roof Slope 7° - 20° & Roof Area 1											H=30
Landscape		Wind Speed (mph)										
Exposure	Snow Load (psf)	100	105	110	115	120	130	140	150	160	170	180
B	0	96	96	96	96	96	92	86	80	75	70	66
	5	96	96	96	96	96	92	86	80	75	70	66
	10	94	94	94	94	94	92	86	80	75	70	66
	15	84	84	84	84	84	84	84	80	75	70	66
	20	77	77	77	77	77	77	77	77	75	70	66
	25	73	73	73	73	73	73	73	73	73	70	66
	30	68	68	68	68	68	68	68	68	68	68	66
	35	63	63	63	63	63	63	63	63	63	63	63
	40	59	59	59	59	59	59	59	59	59	59	59
	45	56	56	56	56	56	56	56	56	56	56	56
	50	53	53	53	53	53	53	53	53	53	53	53
	55	51	51	51	51	51	51	51	51	51	51	51
	60	49	49	49	49	49	49	49	49	49	49	49
	70	45	45	45	45	45	45	45	45	45	45	45
	80	43	43	43	43	43	43	43	43	43	43	43
	90	40	40	40	40	40	40	40	40	40	40	40
	100	38	38	38	38	38	38	38	38	38	38	38
	110	36	36	36	36	36	36	36	36	36	36	36
	120	35	35	35	35	35	35	35	35	35	35	35
C	0	96	96	92	88	84	78	72	67	63	59	*
	5	96	96	92	88	84	78	72	67	63	59	*
	10	94	94	92	88	84	78	72	67	63	59	*
	15	84	84	84	84	84	78	72	67	63	59	*
	20	77	77	77	77	77	77	72	67	63	59	*
	25	73	73	73	73	73	73	72	67	63	59	*
	30	68	68	68	68	68	68	68	67	63	59	*
	35	63	63	63	63	63	63	63	63	63	59	*
	40	59	59	59	59	59	59	59	59	59	59	*
	45	56	56	56	56	56	56	56	56	56	56	*
	50	53	53	53	53	53	53	53	53	53	53	*
	55	51	51	51	51	51	51	51	51	51	51	*
	60	49	49	49	49	49	49	49	49	49	49	*
	70	45	45	45	45	45	45	45	45	45	45	*
	80	43	43	43	43	43	43	43	43	43	43	*
	90	40	40	40	40	40	40	40	40	40	40	*
	100	38	38	38	38	38	38	38	38	38	38	*
	110	36	36	36	36	36	36	36	36	36	36	*
	120	35	35	35	35	35	35	35	35	35	35	*
D	0	93	89	85	81	78	72	66	62	*	*	*
	5	93	89	85	81	78	72	66	62	*	*	*
	10	93	89	85	81	78	72	66	62	*	*	*
	15	84	84	84	81	78	72	66	62	*	*	*
	20	77	77	77	77	77	72	66	62	*	*	*
	25	73	73	73	73	73	72	66	62	*	*	*
	30	68	68	68	68	68	68	66	62	*	*	*
	35	63	63	63	63	63	63	63	62	*	*	*
	40	59	59	59	59	59	59	59	59	*	*	*
	45	56	56	56	56	56	56	56	56	*	*	*
	50	53	53	53	53	53	53	53	53	*	*	*
	55	51	51	51	51	51	51	51	51	*	*	*
	60	49	49	49	49	49	49	49	49	*	*	*
	70	45	45	45	45	45	45	45	45	*	*	*
	80	43	43	43	43	43	43	43	43	*	*	*
	90	40	40	40	40	40	40	40	40	*	*	*
	100	38	38	38	38	38	38	38	38	*	*	*
	110	36	36	36	36	36	36	36	36	*	*	*
	120	35	35	35	35	35	35	35	35	*	*	*

Notes – see page 52-55, and 95

T2c	Gable - Maximum Span (in) for Roof Slope 20° - 27° & Roof Area 1											H=30
Landscape		Wind Speed (mph)										
Exposure	Snow Load (psf)	100	105	110	115	120	130	140	150	160	170	180
B	0	96	96	96	96	96	96	96	92	86	81	77
	5	96	96	96	96	96	96	96	92	86	81	77
	10	95	95	95	95	95	95	95	92	86	81	77
	15	87	87	87	87	87	87	87	87	86	81	77
	20	81	81	81	81	81	81	81	81	81	81	77
	25	75	75	75	75	75	75	75	75	75	75	75
	30	70	70	70	70	70	70	70	70	70	70	70
	35	66	66	66	66	66	66	66	66	66	66	66
	40	62	62	62	62	62	62	62	62	62	62	62
	45	59	59	59	59	59	59	59	59	59	59	59
	50	56	56	56	56	56	56	56	56	56	56	56
	55	53	53	53	53	53	53	53	53	53	53	53
	60	51	51	51	51	51	51	51	51	51	51	51
	70	48	48	48	48	48	48	48	48	48	48	48
	80	45	45	45	45	45	45	45	45	45	45	45
	90	42	42	42	42	42	42	42	42	42	42	42
	100	40	40	40	40	40	40	40	40	40	40	40
	110	38	38	38	38	38	38	38	38	38	38	38
	120	36	36	36	36	36	36	36	36	36	36	36
C	0	96	96	96	96	96	90	83	78	73	68	65
	5	96	96	96	96	96	90	83	78	73	68	65
	10	95	95	95	95	95	90	83	78	73	68	65
	15	87	87	87	87	87	87	83	78	73	68	65
	20	81	81	81	81	81	81	81	78	73	68	65
	25	75	75	75	75	75	75	75	75	73	68	65
	30	70	70	70	70	70	70	70	70	70	68	65
	35	66	66	66	66	66	66	66	66	66	65	64
	40	62	62	62	62	62	62	62	62	62	62	62
	45	59	59	59	59	59	59	59	59	59	59	59
	50	56	56	56	56	56	56	56	56	56	56	56
	55	53	53	53	53	53	53	53	53	53	53	53
	60	51	51	51	51	51	51	51	51	51	51	51
	70	48	48	48	48	48	48	48	48	48	48	48
	80	45	45	45	45	45	45	45	45	45	45	45
	90	42	42	42	42	42	42	42	42	42	42	42
	100	40	40	40	40	40	40	40	40	40	40	40
	110	38	38	38	38	38	38	38	38	38	38	38
	120	36	36	36	36	36	36	36	36	36	36	36
D	0	96	96	96	93	89	82	76	71	67	63	59
	5	96	96	96	93	89	82	76	71	67	63	59
	10	95	95	95	93	89	82	76	71	67	63	59
	15	87	87	87	87	87	82	76	71	67	63	59
	20	81	81	81	81	81	81	76	71	67	63	59
	25	75	75	75	75	75	75	75	71	67	63	59
	30	70	70	70	70	70	70	70	69	67	63	59
	35	66	66	66	66	66	66	66	66	65	63	59
	40	62	62	62	62	62	62	62	62	62	61	59
	45	59	59	59	59	59	59	59	59	59	59	58
	50	56	56	56	56	56	56	56	56	56	56	56
	55	53	53	53	53	53	53	53	53	53	53	53
	60	51	51	51	51	51	51	51	51	51	51	51
	70	48	48	48	48	48	48	48	48	48	48	48
	80	45	45	45	45	45	45	45	45	45	45	45
	90	42	42	42	42	42	42	42	42	42	42	42
	100	40	40	40	40	40	40	40	40	40	40	40
	110	38	38	38	38	38	38	38	38	38	38	38
	120	36	36	36	36	36	36	36	36	36	36	36

Notes – see page 52-55, and 95

T2d	Gable - Maximum Span (in) for Roof Slope 27° - 45° & Roof Area 1											H=30
Landscape		Wind Speed (mph)										
Exposure	Snow Load (psf)	100	105	110	115	120	130	140	150	160	170	180
B	0	96	96	96	96	96	96	91	84	78	73	69
	5	96	96	96	96	96	96	91	84	78	73	69
	10	96	96	96	96	96	96	91	84	78	73	69
	15	89	89	89	89	89	89	88	84	78	73	69
	20	82	82	82	82	82	82	82	80	78	73	69
	25	77	77	77	77	77	77	77	75	74	72	69
	30	73	73	73	73	73	73	73	71	70	69	67
	35	68	68	68	68	68	68	68	68	67	66	65
	40	65	65	65	65	65	65	65	65	64	63	62
	45	61	61	61	61	61	61	61	61	61	61	60
	50	58	58	58	58	58	58	58	58	58	58	58
	55	56	56	56	56	56	56	56	56	56	56	56
	60	54	54	54	54	54	54	54	54	54	54	54
	70	50	50	50	50	50	50	50	50	50	50	50
	80	47	47	47	47	47	47	47	47	47	47	47
	90	44	44	44	44	44	44	44	44	44	44	44
	100	42	42	42	42	42	42	42	42	42	42	42
	110	40	40	40	40	40	40	40	40	40	40	40
	120	38	38	38	38	38	38	38	38	38	38	38
C	0	96	96	96	93	89	82	75	70	65	62	58
	5	96	96	96	93	89	82	75	70	65	62	58
	10	96	96	96	93	89	82	75	70	65	62	58
	15	89	89	89	89	88	82	75	70	65	62	58
	20	82	82	82	82	81	79	75	70	65	62	58
	25	77	77	77	77	76	75	73	70	65	62	58
	30	73	73	73	73	72	71	69	68	65	62	58
	35	68	68	68	68	68	67	66	65	64	62	58
	40	65	65	65	65	65	65	63	62	61	60	58
	45	61	61	61	61	61	61	61	60	59	58	57
	50	58	58	58	58	58	58	58	58	57	56	55
	55	56	56	56	56	56	56	56	56	55	54	53
	60	54	54	54	54	54	54	54	54	54	53	52
	70	50	50	50	50	50	50	50	50	50	50	49
	80	47	47	47	47	47	47	47	47	47	47	47
	90	44	44	44	44	44	44	44	44	44	44	44
	100	42	42	42	42	42	42	42	42	42	42	42
	110	40	40	40	40	40	40	40	40	40	40	40
	120	38	38	38	38	38	38	38	38	38	38	38
D	0	96	94	89	85	81	75	69	64	60	57	*
	5	96	94	89	85	81	75	69	64	60	57	*
	10	96	94	89	85	81	75	69	64	60	57	*
	15	89	89	88	85	81	75	69	64	60	57	*
	20	82	82	81	80	79	75	69	64	60	57	*
	25	77	77	76	76	75	73	69	64	60	57	*
	30	73	73	72	72	71	69	67	64	60	*	*
	35	68	68	68	68	67	66	65	63	60	*	*
	40	65	65	65	65	65	63	62	61	60	*	*
	45	61	61	61	61	61	61	60	59	58	*	*
	50	58	58	58	58	58	58	58	57	56	*	*
	55	56	56	56	56	56	56	56	55	54	*	*
	60	54	54	54	54	54	54	54	53	52	*	*
	70	50	50	50	50	50	50	50	50	50	*	*
	80	47	47	47	47	47	47	47	47	47	*	*
	90	44	44	44	44	44	44	44	44	44	*	*
	100	42	42	42	42	42	42	42	42	42	*	*
	110	40	40	40	40	40	40	40	40	40	*	*
	120	38	38	38	38	38	38	38	38	38	*	*

Notes – see page 52-55, and 95

T3a	Gable - Maximum Span (in) for Roof Slope 0° - 7° & Roof Area 1											H=15
Portrait		Wind Speed (mph)										
Exposure	Snow Load (psf)	100	105	110	115	120	130	140	150	160	170	180
B	0	96/96	96/96	96/96	96/96	96/96	96/96	96/96	96/95	95/88	89/82	83/77
	5	96/96	96/96	96/96	96/96	96/96	96/96	96/96	96/95	95/88	89/82	83/77
	10	95/87	95/87	95/87	95/87	95/87	95/87	95/87	95/87	95/87	89/82	83/77
	15	86/79	86/79	86/79	86/79	86/79	86/79	86/79	86/79	86/79	86/79	83/77
	20	79/72	79/72	79/72	79/72	79/72	79/72	79/72	79/72	79/72	79/72	79/72
	25	77/71	77/71	77/71	77/71	77/71	77/71	77/71	77/71	77/71	77/71	77/71
	30	72/67	72/67	72/67	72/67	72/67	72/67	72/67	72/67	72/67	72/67	72/67
	35	67/62	67/62	67/62	67/62	67/62	67/62	67/62	67/62	67/62	67/62	67/62
	40	63/58	63/58	63/58	63/58	63/58	63/58	63/58	63/58	63/58	63/58	63/58
	45	60/55	60/55	60/55	60/55	60/55	60/55	60/55	60/55	60/55	60/55	60/55
	50	57/52	57/52	57/52	57/52	57/52	57/52	57/52	57/52	57/52	57/52	57/52
	55	54/50	54/50	54/50	54/50	54/50	54/50	54/50	54/50	54/50	54/50	54/50
	60	52/48	52/48	52/48	52/48	52/48	52/48	52/48	52/48	52/48	52/48	52/48
	70	48/44	48/44	48/44	48/44	48/44	48/44	48/44	48/44	48/44	48/44	48/44
	80	45/42	45/42	45/42	45/42	45/42	45/42	45/42	45/42	45/42	45/42	45/42
	90	43/39	43/39	43/39	43/39	43/39	43/39	43/39	43/39	43/39	43/39	43/39
	100	40/37	40/37	40/37	40/37	40/37	40/37	40/37	40/37	40/37	40/37	40/37
	110	39/35	39/35	39/35	39/35	39/35	39/35	39/35	39/35	39/35	39/35	39/35
	120	37/34	37/34	37/34	37/34	37/34	37/34	37/34	37/34	37/34	37/34	37/34
C	0	96/96	96/96	96/96	96/96	96/96	96/89	89/82	82/76	76/71	71/66	67/62
	5	96/96	96/96	96/96	96/96	96/96	96/89	89/82	82/76	76/71	71/66	67/62
	10	95/87	95/87	95/87	95/87	95/87	95/87	89/82	82/76	76/71	71/66	67/62
	15	86/79	86/79	86/79	86/79	86/79	86/79	86/79	82/76	76/71	71/66	67/62
	20	79/72	79/72	79/72	79/72	79/72	79/72	79/72	79/72	76/71	71/66	67/62
	25	77/71	77/71	77/71	77/71	77/71	77/71	77/71	77/71	76/71	71/66	67/62
	30	72/67	72/67	72/67	72/67	72/67	72/67	72/67	72/67	72/67	71/66	67/62
	35	67/62	67/62	67/62	67/62	67/62	67/62	67/62	67/62	67/62	67/62	67/62
	40	63/58	63/58	63/58	63/58	63/58	63/58	63/58	63/58	63/58	63/58	63/58
	45	60/55	60/55	60/55	60/55	60/55	60/55	60/55	60/55	60/55	60/55	60/55
	50	57/52	57/52	57/52	57/52	57/52	57/52	57/52	57/52	57/52	57/52	57/52
	55	54/50	54/50	54/50	54/50	54/50	54/50	54/50	54/50	54/50	54/50	54/50
	60	52/48	52/48	52/48	52/48	52/48	52/48	52/48	52/48	52/48	52/48	52/48
	70	48/44	48/44	48/44	48/44	48/44	48/44	48/44	48/44	48/44	48/44	48/44
	80	45/42	45/42	45/42	45/42	45/42	45/42	45/42	45/42	45/42	45/42	45/42
	90	43/39	43/39	43/39	43/39	43/39	43/39	43/39	43/39	43/39	43/39	43/39
	100	40/37	40/37	40/37	40/37	40/37	40/37	40/37	40/37	40/37	40/37	40/37
	110	39/35	39/35	39/35	39/35	39/35	39/35	39/35	39/35	39/35	39/35	39/35
	120	37/34	37/34	37/34	37/34	37/34	37/34	37/34	37/34	37/34	37/34	37/34
D	0	96/96	96/96	96/96	96/92	95/88	87/80	80/74	74/68	69/63	64/59	60/56
	5	96/96	96/96	96/96	96/92	95/88	87/80	80/74	74/68	69/63	64/59	60/56
	10	95/87	95/87	95/87	95/87	95/87	87/80	80/74	74/68	69/63	64/59	60/56
	15	86/79	86/79	86/79	86/79	86/79	86/79	80/74	74/68	69/63	64/59	60/56
	20	79/72	79/72	79/72	79/72	79/72	79/72	79/72	74/68	69/63	64/59	60/*
	25	77/71	77/71	77/71	77/71	77/71	77/71	77/71	74/68	69/63	64/59	60/*
	30	72/67	72/67	72/67	72/67	72/67	72/67	72/67	72/67	69/63	64/59	60/*
	35	67/62	67/62	67/62	67/62	67/62	67/62	67/62	67/62	67/62	64/59	60/*
	40	63/58	63/58	63/58	63/58	63/58	63/58	63/58	63/58	63/58	63/58	60/*
	45	60/55	60/55	60/55	60/55	60/55	60/55	60/55	60/55	60/55	60/55	60/*
	50	57/52	57/52	57/52	57/52	57/52	57/52	57/52	57/52	57/52	57/52	57/*
	55	54/50	54/50	54/50	54/50	54/50	54/50	54/50	54/50	54/50	54/50	54/*
	60	52/48	52/48	52/48	52/48	52/48	52/48	52/48	52/48	52/48	52/48	52/*
	70	48/44	48/44	48/44	48/44	48/44	48/44	48/44	48/44	48/44	48/44	48/*
	80	45/42	45/42	45/42	45/42	45/42	45/42	45/42	45/42	45/42	45/42	45/*
	90	43/39	43/39	43/39	43/39	43/39	43/39	43/39	43/39	43/39	43/39	43/*
	100	40/37	40/37	40/37	40/37	40/37	40/37	40/37	40/37	40/37	40/37	40/*
	110	39/35	39/35	39/35	39/35	39/35	39/35	39/35	39/35	39/35	39/35	39/*
	120	37/34	37/34	37/34	37/34	37/34	37/34	37/34	37/34	37/34	37/34	37/*

Notes – see page 52-55, and 95

T3b	Gable - Maximum Span (in) for Roof Slope 7° - 20° & Roof Area 1											H=15
Portrait		Wind Speed (mph)										
Exposure	Snow Load (psf)	100	105	110	115	120	130	140	150	160	170	180
B	0	96/96	96/96	96/96	96/96	96/96	96/96	96/91	88/83	81/76	77/70	72/67
	5	96/94	96/94	96/94	96/94	96/94	96/94	96/91	88/83	81/76	77/70	72/67
	10	90/83	90/83	90/83	90/83	90/83	90/83	90/83	88/83	81/76	77/70	72/67
	15	81/75	81/75	81/75	81/75	81/75	81/75	81/75	81/75	81/75	77/70	72/67
	20	74/68	74/68	74/68	74/68	74/68	74/68	74/68	74/68	74/68	74/68	72/67
	25	69/63	69/63	69/63	69/63	69/63	69/63	69/63	69/63	69/63	69/63	69/63
	30	63/58	63/58	63/58	63/58	63/58	63/58	63/58	63/58	63/58	63/58	63/58
	35	59/54	59/54	59/54	59/54	59/54	59/54	59/54	59/54	59/54	59/54	59/54
	40	55/51	55/51	55/51	55/51	55/51	55/51	55/51	55/51	55/51	55/51	55/51
	45	52/48	52/48	52/48	52/48	52/48	52/48	52/48	52/48	52/48	52/48	52/48
	50	50/46	50/46	50/46	50/46	50/46	50/46	50/46	50/46	50/46	50/46	50/46
	55	48/44	48/44	48/44	48/44	48/44	48/44	48/44	48/44	48/44	48/44	48/44
	60	46/42	46/42	46/42	46/42	46/42	46/42	46/42	46/42	46/42	46/42	46/42
	70	42/39	42/39	42/39	42/39	42/39	42/39	42/39	42/39	42/39	42/39	42/39
	80	40/36	40/36	40/36	40/36	40/36	40/36	40/36	40/36	40/36	40/36	40/36
	90	37/34	37/34	37/34	37/34	37/34	37/34	37/34	37/34	37/34	37/34	37/34
	100	35/32	35/32	35/32	35/32	35/32	35/32	35/32	35/32	35/32	35/32	35/32
	110	34/31	34/31	34/31	34/31	34/31	34/31	34/31	34/31	34/31	34/31	34/31
	120	32/29	32/29	32/29	32/29	32/29	32/29	32/29	32/29	32/29	32/29	32/29
C	0	96/96	96/96	96/96	96/91	91/86	82/77	77/70	71/66	67/61	63/58	59/54
	5	96/94	96/94	96/94	96/91	91/86	82/77	77/70	71/66	67/61	63/58	59/54
	10	90/83	90/83	90/83	90/83	90/83	82/77	77/70	71/66	67/61	63/58	59/54
	15	81/75	81/75	81/75	81/75	81/75	81/75	77/70	71/66	67/61	63/58	59/*
	20	74/68	74/68	74/68	74/68	74/68	74/68	74/68	71/66	67/61	63/58	59/*
	25	69/63	69/63	69/63	69/63	69/63	69/63	69/63	69/63	67/61	63/58	59/*
	30	63/58	63/58	63/58	63/58	63/58	63/58	63/58	63/58	63/58	63/58	59/*
	35	59/54	59/54	59/54	59/54	59/54	59/54	59/54	59/54	59/54	59/54	59/*
	40	55/51	55/51	55/51	55/51	55/51	55/51	55/51	55/51	55/51	55/51	55/*
	45	52/48	52/48	52/48	52/48	52/48	52/48	52/48	52/48	52/48	52/48	52/*
	50	50/46	50/46	50/46	50/46	50/46	50/46	50/46	50/46	50/46	50/46	50/*
	55	48/44	48/44	48/44	48/44	48/44	48/44	48/44	48/44	48/44	48/44	48/*
	60	46/42	46/42	46/42	46/42	46/42	46/42	46/42	46/42	46/42	46/42	46/*
	70	42/39	42/39	42/39	42/39	42/39	42/39	42/39	42/39	42/39	42/39	42/*
	80	40/36	40/36	40/36	40/36	40/36	40/36	40/36	40/36	40/36	40/36	40/*
	90	37/34	37/34	37/34	37/34	37/34	37/34	37/34	37/34	37/34	37/34	37/*
	100	35/32	35/32	35/32	35/32	35/32	35/32	35/32	35/32	35/32	35/32	35/*
	110	34/31	34/31	34/31	34/31	34/31	34/31	34/31	34/31	34/31	34/31	34/*
	120	32/29	32/29	32/29	32/29	32/29	32/29	32/29	32/29	32/29	32/29	32/*
D	0	96/96	96/90	90/85	85/80	81/76	75/69	69/64	65/59	61/56	57/52	*/*
	5	96/94	96/90	90/85	85/80	81/76	75/69	69/64	65/59	61/56	57/52	*/*
	10	90/83	90/83	90/83	85/80	81/76	75/69	69/64	65/59	61/56	57/*	*/*
	15	81/75	81/75	81/75	81/75	81/75	75/69	69/64	65/59	61/56	*/*	*/*
	20	74/68	74/68	74/68	74/68	74/68	74/68	69/64	65/59	61/*	*/*	*/*
	25	69/63	69/63	69/63	69/63	69/63	69/63	69/63	65/59	61/*	*/*	*/*
	30	63/58	63/58	63/58	63/58	63/58	63/58	63/58	63/58	61/*	*/*	*/*
	35	59/54	59/54	59/54	59/54	59/54	59/54	59/54	59/54	59/*	*/*	*/*
	40	55/51	55/51	55/51	55/51	55/51	55/51	55/51	55/51	55/*	*/*	*/*
	45	52/48	52/48	52/48	52/48	52/48	52/48	52/48	52/48	52/*	*/*	*/*
	50	50/46	50/46	50/46	50/46	50/46	50/46	50/46	50/46	50/*	*/*	*/*
	55	48/44	48/44	48/44	48/44	48/44	48/44	48/44	48/44	48/*	*/*	*/*
	60	46/42	46/42	46/42	46/42	46/42	46/42	46/42	46/42	46/*	*/*	*/*
	70	42/39	42/39	42/39	42/39	42/39	42/39	42/39	42/39	42/*	*/*	*/*
	80	40/36	40/36	40/36	40/36	40/36	40/36	40/36	40/36	40/*	*/*	*/*
	90	37/34	37/34	37/34	37/34	37/34	37/34	37/34	37/34	37/*	*/*	*/*
	100	35/32	35/32	35/32	35/32	35/32	35/32	35/32	35/32	35/*	*/*	*/*
	110	34/31	34/31	34/31	34/31	34/31	34/31	34/31	34/31	34/*	*/*	*/*
	120	32/29	32/29	32/29	32/29	32/29	32/29	32/29	32/29	32/*	*/*	*/*

Notes – see page 52-55, and 95

T3c	Gable - Maximum Span (in) for Roof Slope 20° - 27° & Roof Area 1											H=15
Portrait		Wind Speed (mph)										
Exposure	Snow Load (psf)	100	105	110	115	120	130	140	150	160	170	180
B	0	96/96	96/96	96/96	96/96	96/96	96/96	96/96	96/94	94/87	88/82	83/77
	5	96/93	96/93	96/93	96/93	96/93	96/93	96/93	96/93	94/87	88/82	83/77
	10	90/83	90/83	90/83	90/83	90/83	90/83	90/83	90/83	90/83	88/82	83/77
	15	82/75	82/75	82/75	82/75	82/75	82/75	82/75	82/75	82/75	82/75	82/75
	20	75/69	75/69	75/69	75/69	75/69	75/69	75/69	75/69	75/69	75/69	75/69
	25	70/64	70/64	70/64	70/64	70/64	70/64	70/64	70/64	70/64	70/64	70/64
	30	64/59	64/59	64/59	64/59	64/59	64/59	64/59	64/59	64/59	64/59	64/59
	35	60/55	60/55	60/55	60/55	60/55	60/55	60/55	60/55	60/55	60/55	60/55
	40	57/52	57/52	57/52	57/52	57/52	57/52	57/52	57/52	57/52	57/52	57/52
	45	54/49	54/49	54/49	54/49	54/49	54/49	54/49	54/49	54/49	54/49	54/49
	50	51/47	51/47	51/47	51/47	51/47	51/47	51/47	51/47	51/47	51/47	51/47
	55	49/45	49/45	49/45	49/45	49/45	49/45	49/45	49/45	49/45	49/45	49/45
	60	47/43	47/43	47/43	47/43	47/43	47/43	47/43	47/43	47/43	47/43	47/43
	70	43/40	43/40	43/40	43/40	43/40	43/40	43/40	43/40	43/40	43/40	43/40
	80	41/37	41/37	41/37	41/37	41/37	41/37	41/37	41/37	41/37	41/37	41/37
	90	38/35	38/35	38/35	38/35	38/35	38/35	38/35	38/35	38/35	38/35	38/35
	100	36/33	36/33	36/33	36/33	36/33	36/33	36/33	36/33	36/33	36/33	36/33
	110	35/32	35/32	35/32	35/32	35/32	35/32	35/32	35/32	35/32	35/32	35/32
	120	33/30	33/30	33/30	33/30	33/30	33/30	33/30	33/30	33/30	33/30	33/30
C	0	96/96	96/96	96/96	96/96	96/96	95/88	88/82	82/76	77/71	72/67	68/63
	5	96/93	96/93	96/93	96/93	96/93	95/88	88/82	82/76	77/71	72/67	68/63
	10	90/83	90/83	90/83	90/83	90/83	90/83	88/82	82/76	77/71	72/67	68/63
	15	82/75	82/75	82/75	82/75	82/75	82/75	82/75	82/75	77/71	72/67	68/63
	20	75/69	75/69	75/69	75/69	75/69	75/69	75/69	75/69	75/69	72/67	68/63
	25	70/64	70/64	70/64	70/64	70/64	70/64	70/64	70/64	70/64	70/64	68/63
	30	64/59	64/59	64/59	64/59	64/59	64/59	64/59	64/59	64/59	64/59	64/59
	35	60/55	60/55	60/55	60/55	60/55	60/55	60/55	60/55	60/55	60/55	60/55
	40	57/52	57/52	57/52	57/52	57/52	57/52	57/52	57/52	57/52	57/52	57/52
	45	54/49	54/49	54/49	54/49	54/49	54/49	54/49	54/49	54/49	54/49	54/49
	50	51/47	51/47	51/47	51/47	51/47	51/47	51/47	51/47	51/47	51/47	51/47
	55	49/45	49/45	49/45	49/45	49/45	49/45	49/45	49/45	49/45	49/45	49/45
	60	47/43	47/43	47/43	47/43	47/43	47/43	47/43	47/43	47/43	47/43	47/43
	70	43/40	43/40	43/40	43/40	43/40	43/40	43/40	43/40	43/40	43/40	43/40
	80	41/37	41/37	41/37	41/37	41/37	41/37	41/37	41/37	41/37	41/37	41/37
	90	38/35	38/35	38/35	38/35	38/35	38/35	38/35	38/35	38/35	38/35	38/35
	100	36/33	36/33	36/33	36/33	36/33	36/33	36/33	36/33	36/33	36/33	36/33
	110	35/32	35/32	35/32	35/32	35/32	35/32	35/32	35/32	35/32	35/32	35/32
	120	33/30	33/30	33/30	33/30	33/30	33/30	33/30	33/30	33/30	33/30	33/30
D	0	96/96	96/96	96/95	96/91	94/87	86/80	80/74	74/68	70/64	66/60	62/57
	5	96/93	96/93	96/93	96/91	94/87	86/80	80/74	74/68	70/64	66/60	62/57
	10	90/83	90/83	90/83	90/83	90/83	86/80	80/74	74/68	70/64	66/60	62/57
	15	82/75	82/75	82/75	82/75	82/75	82/75	80/74	74/68	70/64	66/60	62/57
	20	75/69	75/69	75/69	75/69	75/69	75/69	75/69	74/68	70/64	66/60	62/57
	25	70/64	70/64	70/64	70/64	70/64	70/64	70/64	70/64	69/64	66/60	62/57
	30	64/59	64/59	64/59	64/59	64/59	64/59	64/59	64/59	64/59	64/59	62/57
	35	60/55	60/55	60/55	60/55	60/55	60/55	60/55	60/55	60/55	60/55	60/55
	40	57/52	57/52	57/52	57/52	57/52	57/52	57/52	57/52	57/52	57/52	57/52
	45	54/49	54/49	54/49	54/49	54/49	54/49	54/49	54/49	54/49	54/49	54/49
	50	51/47	51/47	51/47	51/47	51/47	51/47	51/47	51/47	51/47	51/47	51/47
	55	49/45	49/45	49/45	49/45	49/45	49/45	49/45	49/45	49/45	49/45	49/45
	60	47/43	47/43	47/43	47/43	47/43	47/43	47/43	47/43	47/43	47/43	47/43
	70	43/40	43/40	43/40	43/40	43/40	43/40	43/40	43/40	43/40	43/40	43/40
	80	41/37	41/37	41/37	41/37	41/37	41/37	41/37	41/37	41/37	41/37	41/37
	90	38/35	38/35	38/35	38/35	38/35	38/35	38/35	38/35	38/35	38/35	38/35
	100	36/33	36/33	36/33	36/33	36/33	36/33	36/33	36/33	36/33	36/33	36/33
	110	35/32	35/32	35/32	35/32	35/32	35/32	35/32	35/32	35/32	35/32	35/32
	120	33/30	33/30	33/30	33/30	33/30	33/30	33/30	33/30	33/30	33/30	33/30

Notes – see page 52-55, and 95

T3d	Gable - Maximum Span (in) for Roof Slope 27° - 45° & Roof Area 1											H=15
Portrait		Wind Speed (mph)										
Exposure	Snow Load (psf)	100	105	110	115	120	130	140	150	160	170	180
B	0	96/95	96/95	96/95	96/95	96/95	96/95	96/95	96/91	91/85	85/79	80/75
	5	96/93	96/93	96/93	96/93	96/93	96/93	96/93	96/91	91/85	85/79	80/75
	10	90/83	90/83	90/83	90/83	90/83	90/83	90/83	90/83	90/83	85/79	80/75
	15	83/76	83/76	83/76	83/76	83/76	83/76	83/76	83/76	83/76	81/75	79/73
	20	77/71	77/71	77/71	77/71	77/71	77/71	77/71	77/71	76/70	75/69	74/68
	25	72/66	72/66	72/66	72/66	72/66	72/66	72/66	72/66	71/66	70/65	69/64
	30	67/61	67/61	67/61	67/61	67/61	67/61	67/61	67/61	67/61	66/61	66/60
	35	62/57	62/57	62/57	62/57	62/57	62/57	62/57	62/57	62/57	62/57	62/57
	40	59/54	59/54	59/54	59/54	59/54	59/54	59/54	59/54	59/54	59/54	59/54
	45	56/51	56/51	56/51	56/51	56/51	56/51	56/51	56/51	56/51	56/51	56/51
	50	53/49	53/49	53/49	53/49	53/49	53/49	53/49	53/49	53/49	53/49	53/49
	55	51/47	51/47	51/47	51/47	51/47	51/47	51/47	51/47	51/47	51/47	51/47
	60	49/45	49/45	49/45	49/45	49/45	49/45	49/45	49/45	49/45	49/45	49/45
	70	45/41	45/41	45/41	45/41	45/41	45/41	45/41	45/41	45/41	45/41	45/41
	80	42/39	42/39	42/39	42/39	42/39	42/39	42/39	42/39	42/39	42/39	42/39
	90	40/37	40/37	40/37	40/37	40/37	40/37	40/37	40/37	40/37	40/37	40/37
	100	38/35	38/35	38/35	38/35	38/35	38/35	38/35	38/35	38/35	38/35	38/35
	110	36/33	36/33	36/33	36/33	36/33	36/33	36/33	36/33	36/33	36/33	36/33
	120	34/32	34/32	34/32	34/32	34/32	34/32	34/32	34/32	34/32	34/32	34/32
C	0	96/95	96/95	96/95	96/95	96/93	92/86	85/79	79/74	74/69	69/64	65/60
	5	96/93	96/93	96/93	96/93	96/93	92/86	85/79	79/74	74/69	69/64	65/60
	10	90/83	90/83	90/83	90/83	90/83	90/83	85/79	79/74	74/69	69/64	65/60
	15	83/76	83/76	83/76	83/76	83/76	83/76	81/75	79/73	74/69	69/64	65/60
	20	77/71	77/71	77/71	77/71	77/71	77/71	75/69	74/68	72/67	69/64	65/60
	25	72/66	72/66	72/66	72/66	72/66	72/66	70/65	69/64	68/63	66/61	65/60
	30	67/61	67/61	67/61	67/61	67/61	67/61	66/61	65/60	64/59	63/58	62/57
	35	62/57	62/57	62/57	62/57	62/57	62/57	62/57	62/57	61/56	60/55	59/55
	40	59/54	59/54	59/54	59/54	59/54	59/54	59/54	59/54	58/54	58/53	57/52
	45	56/51	56/51	56/51	56/51	56/51	56/51	56/51	56/51	56/51	55/51	54/50
	50	53/49	53/49	53/49	53/49	53/49	53/49	53/49	53/49	53/49	53/49	53/48
	55	51/47	51/47	51/47	51/47	51/47	51/47	51/47	51/47	51/47	51/47	51/47
	60	49/45	49/45	49/45	49/45	49/45	49/45	49/45	49/45	49/45	49/45	49/45
	70	45/41	45/41	45/41	45/41	45/41	45/41	45/41	45/41	45/41	45/41	45/41
	80	42/39	42/39	42/39	42/39	42/39	42/39	42/39	42/39	42/39	42/39	42/39
	90	40/37	40/37	40/37	40/37	40/37	40/37	40/37	40/37	40/37	40/37	40/37
	100	38/35	38/35	38/35	38/35	38/35	38/35	38/35	38/35	38/35	38/35	38/35
	110	36/33	36/33	36/33	36/33	36/33	36/33	36/33	36/33	36/33	36/33	36/33
	120	34/32	34/32	34/32	34/32	34/32	34/32	34/32	34/32	34/32	34/32	34/32
D	0	96/95	96/95	96/92	95/88	90/84	83/78	77/72	71/66	66/62	62/58	58/54
	5	96/93	96/93	96/92	95/88	90/84	83/78	77/72	71/66	66/62	62/58	58/54
	10	90/83	90/83	90/83	90/83	90/83	83/78	77/72	71/66	66/62	62/58	58/54
	15	83/76	83/76	83/76	83/76	82/76	80/74	77/72	71/66	66/62	62/58	58/54
	20	77/71	77/71	77/71	77/71	76/70	75/69	73/67	71/66	66/62	62/58	58/54
	25	72/66	72/66	72/66	72/66	71/66	70/65	69/63	67/62	66/61	62/58	58/54
	30	67/61	67/61	67/61	67/61	67/61	66/61	65/60	64/59	62/58	61/56	58/*
	35	62/57	62/57	62/57	62/57	62/57	62/57	62/57	61/56	60/55	58/54	57/*
	40	59/54	59/54	59/54	59/54	59/54	59/54	59/54	58/53	57/53	56/52	55/*
	45	56/51	56/51	56/51	56/51	56/51	56/51	56/51	56/51	55/50	54/50	53/*
	50	53/49	53/49	53/49	53/49	53/49	53/49	53/49	53/49	53/49	52/48	51/*
	55	51/47	51/47	51/47	51/47	51/47	51/47	51/47	51/47	51/47	50/46	50/*
	60	49/45	49/45	49/45	49/45	49/45	49/45	49/45	49/45	49/45	49/45	48/*
	70	45/41	45/41	45/41	45/41	45/41	45/41	45/41	45/41	45/41	45/41	*/*
	80	42/39	42/39	42/39	42/39	42/39	42/39	42/39	42/39	42/39	42/*	*/*
	90	40/37	40/37	40/37	40/37	40/37	40/37	40/37	40/37	40/37	40/*	*/*
	100	38/35	38/35	38/35	38/35	38/35	38/35	38/35	38/35	38/35	38/*	*/*
	110	36/33	36/33	36/33	36/33	36/33	36/33	36/33	36/33	36/33	36/*	*/*
	120	34/32	34/32	34/32	34/32	34/32	34/32	34/32	34/32	34/32	34/*	*/*

Notes – see page 52-55, and 95

T4a	Gable - Maximum Span (in) for Roof Slope 0° - 7° & Roof Area 1											H=30
Portrait		Wind Speed (mph)										
Exposure	Snow Load (psf)	100	105	110	115	120	130	140	150	160	170	180
B	0	96/96	96/96	96/96	96/96	96/96	96/96	96/92	92/85	85/79	80/74	75/69
	5	96/96	96/96	96/96	96/96	96/96	96/96	96/92	92/85	85/79	80/74	75/69
	10	95/87	95/87	95/87	95/87	95/87	95/87	95/87	92/85	85/79	80/74	75/69
	15	86/79	86/79	86/79	86/79	86/79	86/79	86/79	86/79	85/79	80/74	75/69
	20	79/72	79/72	79/72	79/72	79/72	79/72	79/72	79/72	79/72	79/72	75/69
	25	77/71	77/71	77/71	77/71	77/71	77/71	77/71	77/71	77/71	77/71	75/69
	30	72/67	72/67	72/67	72/67	72/67	72/67	72/67	72/67	72/67	72/67	72/67
	35	67/62	67/62	67/62	67/62	67/62	67/62	67/62	67/62	67/62	67/62	67/62
	40	63/58	63/58	63/58	63/58	63/58	63/58	63/58	63/58	63/58	63/58	63/58
	45	60/55	60/55	60/55	60/55	60/55	60/55	60/55	60/55	60/55	60/55	60/55
	50	57/52	57/52	57/52	57/52	57/52	57/52	57/52	57/52	57/52	57/52	57/52
	55	54/50	54/50	54/50	54/50	54/50	54/50	54/50	54/50	54/50	54/50	54/50
	60	52/48	52/48	52/48	52/48	52/48	52/48	52/48	52/48	52/48	52/48	52/48
	70	48/44	48/44	48/44	48/44	48/44	48/44	48/44	48/44	48/44	48/44	48/44
	80	45/42	45/42	45/42	45/42	45/42	45/42	45/42	45/42	45/42	45/42	45/42
	90	43/39	43/39	43/39	43/39	43/39	43/39	43/39	43/39	43/39	43/39	43/39
	100	40/37	40/37	40/37	40/37	40/37	40/37	40/37	40/37	40/37	40/37	40/37
	110	39/35	39/35	39/35	39/35	39/35	39/35	39/35	39/35	39/35	39/35	39/35
	120	37/34	37/34	37/34	37/34	37/34	37/34	37/34	37/34	37/34	37/34	37/34
C	0	96/96	96/96	96/96	96/95	96/90	89/82	82/76	76/70	70/65	66/61	62/57
	5	96/96	96/96	96/96	96/95	96/90	89/82	82/76	76/70	70/65	66/61	62/57
	10	95/87	95/87	95/87	95/87	95/87	89/82	82/76	76/70	70/65	66/61	62/57
	15	86/79	86/79	86/79	86/79	86/79	86/79	82/76	76/70	70/65	66/61	62/57
	20	79/72	79/72	79/72	79/72	79/72	79/72	79/72	76/70	70/65	66/61	62/57
	25	77/71	77/71	77/71	77/71	77/71	77/71	77/71	76/70	70/65	66/61	62/57
	30	72/67	72/67	72/67	72/67	72/67	72/67	72/67	72/67	70/65	66/61	62/57
	35	67/62	67/62	67/62	67/62	67/62	67/62	67/62	67/62	67/62	66/61	62/57
	40	63/58	63/58	63/58	63/58	63/58	63/58	63/58	63/58	63/58	63/58	62/57
	45	60/55	60/55	60/55	60/55	60/55	60/55	60/55	60/55	60/55	60/55	60/55
	50	57/52	57/52	57/52	57/52	57/52	57/52	57/52	57/52	57/52	57/52	57/52
	55	54/50	54/50	54/50	54/50	54/50	54/50	54/50	54/50	54/50	54/50	54/*
	60	52/48	52/48	52/48	52/48	52/48	52/48	52/48	52/48	52/48	52/48	52/*
	70	48/44	48/44	48/44	48/44	48/44	48/44	48/44	48/44	48/44	48/44	48/*
	80	45/42	45/42	45/42	45/42	45/42	45/42	45/42	45/42	45/42	45/42	45/*
	90	43/39	43/39	43/39	43/39	43/39	43/39	43/39	43/39	43/39	43/39	43/*
	100	40/37	40/37	40/37	40/37	40/37	40/37	40/37	40/37	40/37	40/37	40/*
	110	39/35	39/35	39/35	39/35	39/35	39/35	39/35	39/35	39/35	39/35	39/*
	120	37/34	37/34	37/34	37/34	37/34	37/34	37/34	37/34	37/34	37/34	37/*
D	0	96/96	96/95	96/90	93/86	88/82	81/75	74/69	69/64	64/59	60/55	*/*
	5	96/96	96/95	96/90	93/86	88/82	81/75	74/69	69/64	64/59	60/55	*/*
	10	95/87	95/87	95/87	93/86	88/82	81/75	74/69	69/64	64/59	60/55	*/*
	15	86/79	86/79	86/79	86/79	86/79	81/75	74/69	69/64	64/59	60/55	*/*
	20	79/72	79/72	79/72	79/72	79/72	79/72	74/69	69/64	64/59	60/*	*/*
	25	77/71	77/71	77/71	77/71	77/71	77/71	74/69	69/64	64/59	60/*	*/*
	30	72/67	72/67	72/67	72/67	72/67	72/67	72/67	69/64	64/59	60/*	*/*
	35	67/62	67/62	67/62	67/62	67/62	67/62	67/62	67/62	64/59	60/*	*/*
	40	63/58	63/58	63/58	63/58	63/58	63/58	63/58	63/58	63/58	60/*	*/*
	45	60/55	60/55	60/55	60/55	60/55	60/55	60/55	60/55	60/55	60/*	*/*
	50	57/52	57/52	57/52	57/52	57/52	57/52	57/52	57/52	57/52	57/*	*/*
	55	54/50	54/50	54/50	54/50	54/50	54/50	54/50	54/50	54/50	54/*	*/*
	60	52/48	52/48	52/48	52/48	52/48	52/48	52/48	52/48	52/48	52/*	*/*
	70	48/44	48/44	48/44	48/44	48/44	48/44	48/44	48/44	48/44	48/*	*/*
	80	45/42	45/42	45/42	45/42	45/42	45/42	45/42	45/42	45/42	45/*	*/*
	90	43/39	43/39	43/39	43/39	43/39	43/39	43/39	43/39	43/39	43/*	*/*
	100	40/37	40/37	40/37	40/37	40/37	40/37	40/37	40/37	40/37	40/*	*/*
	110	39/35	39/35	39/35	39/35	39/35	39/35	39/35	39/35	39/35	39/*	*/*
	120	37/34	37/34	37/34	37/34	37/34	37/34	37/34	37/34	37/34	37/*	*/*

Notes – see page 52-55, and 95

T4b	Gable - Maximum Span (in) for Roof Slope 7° - 20° & Roof Area 1											H=30
Portrait		Wind Speed (mph)										
Exposure	Snow Load (psf)	100	105	110	115	120	130	140	150	160	170	180
B	0	96/96	96/96	96/96	96/96	96/96	93/88	84/80	79/73	74/68	69/64	65/60
	5	96/94	96/94	96/94	96/94	96/94	93/88	84/80	79/73	74/68	69/64	65/60
	10	90/83	90/83	90/83	90/83	90/83	90/83	84/80	79/73	74/68	69/64	65/60
	15	81/75	81/75	81/75	81/75	81/75	81/75	81/75	79/73	74/68	69/64	65/60
	20	74/68	74/68	74/68	74/68	74/68	74/68	74/68	74/68	74/68	69/64	65/60
	25	69/63	69/63	69/63	69/63	69/63	69/63	69/63	69/63	69/63	69/63	65/60
	30	63/58	63/58	63/58	63/58	63/58	63/58	63/58	63/58	63/58	63/58	63/58
	35	59/54	59/54	59/54	59/54	59/54	59/54	59/54	59/54	59/54	59/54	59/54
	40	55/51	55/51	55/51	55/51	55/51	55/51	55/51	55/51	55/51	55/51	55/51
	45	52/48	52/48	52/48	52/48	52/48	52/48	52/48	52/48	52/48	52/48	52/48
	50	50/46	50/46	50/46	50/46	50/46	50/46	50/46	50/46	50/46	50/46	50/46
	55	48/44	48/44	48/44	48/44	48/44	48/44	48/44	48/44	48/44	48/44	48/44
	60	46/42	46/42	46/42	46/42	46/42	46/42	46/42	46/42	46/42	46/42	46/42
	70	42/39	42/39	42/39	42/39	42/39	42/39	42/39	42/39	42/39	42/39	42/39
	80	40/36	40/36	40/36	40/36	40/36	40/36	40/36	40/36	40/36	40/36	40/36
	90	37/34	37/34	37/34	37/34	37/34	37/34	37/34	37/34	37/34	37/34	37/34
	100	35/32	35/32	35/32	35/32	35/32	35/32	35/32	35/32	35/32	35/32	35/32
	110	34/31	34/31	34/31	34/31	34/31	34/31	34/31	34/31	34/31	34/31	34/31
	120	32/29	32/29	32/29	32/29	32/29	32/29	32/29	32/29	32/29	32/29	32/29
C	0	96/96	96/93	93/88	87/83	83/78	77/71	71/65	66/61	62/57	58/54	*/*
	5	96/94	96/93	93/88	87/83	83/78	77/71	71/65	66/61	62/57	58/54	*/*
	10	90/83	90/83	90/83	87/83	83/78	77/71	71/65	66/61	62/57	58/54	*/*
	15	81/75	81/75	81/75	81/75	81/75	77/71	71/65	66/61	62/57	58/*	*/*
	20	74/68	74/68	74/68	74/68	74/68	74/68	71/65	66/61	62/57	58/*	*/*
	25	69/63	69/63	69/63	69/63	69/63	69/63	69/63	66/61	62/57	58/*	*/*
	30	63/58	63/58	63/58	63/58	63/58	63/58	63/58	63/58	62/57	58/*	*/*
	35	59/54	59/54	59/54	59/54	59/54	59/54	59/54	59/54	59/54	58/*	*/*
	40	55/51	55/51	55/51	55/51	55/51	55/51	55/51	55/51	55/51	55/*	*/*
	45	52/48	52/48	52/48	52/48	52/48	52/48	52/48	52/48	52/48	52/*	*/*
	50	50/46	50/46	50/46	50/46	50/46	50/46	50/46	50/46	50/46	50/*	*/*
	55	48/44	48/44	48/44	48/44	48/44	48/44	48/44	48/44	48/44	48/*	*/*
	60	46/42	46/42	46/42	46/42	46/42	46/42	46/42	46/42	46/42	46/*	*/*
	70	42/39	42/39	42/39	42/39	42/39	42/39	42/39	42/39	42/39	42/*	*/*
	80	40/36	40/36	40/36	40/36	40/36	40/36	40/36	40/36	40/36	40/*	*/*
	90	37/34	37/34	37/34	37/34	37/34	37/34	37/34	37/34	37/34	37/*	*/*
	100	35/32	35/32	35/32	35/32	35/32	35/32	35/32	35/32	35/32	35/*	*/*
	110	34/31	34/31	34/31	34/31	34/31	34/31	34/31	34/31	34/31	34/*	*/*
	120	32/29	32/29	32/29	32/29	32/29	32/29	32/29	32/29	32/29	32/*	*/*
D	0	94/89	88/83	83/78	80/74	76/70	70/65	65/60	61/56	57/52	*/*	*/*
	5	94/89	88/83	83/78	80/74	76/70	70/65	65/60	61/56	57/52	*/*	*/*
	10	90/83	88/83	83/78	80/74	76/70	70/65	65/60	61/56	57/*	*/*	*/*
	15	81/75	81/75	81/75	80/74	76/70	70/65	65/60	61/56	*/*	*/*	*/*
	20	74/68	74/68	74/68	74/68	74/68	70/65	65/60	61/*	*/*	*/*	*/*
	25	69/63	69/63	69/63	69/63	69/63	69/63	65/60	61/*	*/*	*/*	*/*
	30	63/58	63/58	63/58	63/58	63/58	63/58	63/58	61/*	*/*	*/*	*/*
	35	59/54	59/54	59/54	59/54	59/54	59/54	59/54	59/*	*/*	*/*	*/*
	40	55/51	55/51	55/51	55/51	55/51	55/51	55/51	55/*	*/*	*/*	*/*
	45	52/48	52/48	52/48	52/48	52/48	52/48	52/48	52/*	*/*	*/*	*/*
	50	50/46	50/46	50/46	50/46	50/46	50/46	50/46	50/*	*/*	*/*	*/*
	55	48/44	48/44	48/44	48/44	48/44	48/44	48/44	48/*	*/*	*/*	*/*
	60	46/42	46/42	46/42	46/42	46/42	46/42	46/42	46/*	*/*	*/*	*/*
	70	42/39	42/39	42/39	42/39	42/39	42/39	42/39	42/*	*/*	*/*	*/*
	80	40/36	40/36	40/36	40/36	40/36	40/36	40/36	40/*	*/*	*/*	*/*
	90	37/34	37/34	37/34	37/34	37/34	37/34	37/34	37/*	*/*	*/*	*/*
	100	35/32	35/32	35/32	35/32	35/32	35/32	35/32	35/*	*/*	*/*	*/*
	110	34/31	34/31	34/31	34/31	34/31	34/31	34/31	34/*	*/*	*/*	*/*
	120	32/29	32/29	32/29	32/29	32/29	32/29	32/29	32/*	*/*	*/*	*/*

Notes – see page 52-55, and 95

T4c	Gable - Maximum Span (in) for Roof Slope 20° - 27° & Roof Area 1											H=30
Portrait		Wind Speed (mph)										
Exposure	Snow Load (psf)	100	105	110	115	120	130	140	150	160	170	180
B	0	96/96	96/96	96/96	96/96	96/96	96/96	96/91	91/84	85/78	80/73	75/69
	5	96/93	96/93	96/93	96/93	96/93	96/93	96/91	91/84	85/78	80/73	75/69
	10	90/83	90/83	90/83	90/83	90/83	90/83	90/83	90/83	85/78	80/73	75/69
	15	82/75	82/75	82/75	82/75	82/75	82/75	82/75	82/75	82/75	80/73	75/69
	20	75/69	75/69	75/69	75/69	75/69	75/69	75/69	75/69	75/69	75/69	75/69
	25	70/64	70/64	70/64	70/64	70/64	70/64	70/64	70/64	70/64	70/64	70/64
	30	64/59	64/59	64/59	64/59	64/59	64/59	64/59	64/59	64/59	64/59	64/59
	35	60/55	60/55	60/55	60/55	60/55	60/55	60/55	60/55	60/55	60/55	60/55
	40	57/52	57/52	57/52	57/52	57/52	57/52	57/52	57/52	57/52	57/52	57/52
	45	54/49	54/49	54/49	54/49	54/49	54/49	54/49	54/49	54/49	54/49	54/49
	50	51/47	51/47	51/47	51/47	51/47	51/47	51/47	51/47	51/47	51/47	51/47
	55	49/45	49/45	49/45	49/45	49/45	49/45	49/45	49/45	49/45	49/45	49/45
	60	47/43	47/43	47/43	47/43	47/43	47/43	47/43	47/43	47/43	47/43	47/43
	70	43/40	43/40	43/40	43/40	43/40	43/40	43/40	43/40	43/40	43/40	43/40
	80	41/37	41/37	41/37	41/37	41/37	41/37	41/37	41/37	41/37	41/37	41/37
	90	38/35	38/35	38/35	38/35	38/35	38/35	38/35	38/35	38/35	38/35	38/35
	100	36/33	36/33	36/33	36/33	36/33	36/33	36/33	36/33	36/33	36/33	36/33
	110	35/32	35/32	35/32	35/32	35/32	35/32	35/32	35/32	35/32	35/32	35/32
	120	33/30	33/30	33/30	33/30	33/30	33/30	33/30	33/30	33/30	33/30	33/30
C	0	96/96	96/96	96/96	96/93	96/89	88/82	82/75	76/70	71/66	67/62	63/58
	5	96/93	96/93	96/93	96/93	96/89	88/82	82/75	76/70	71/66	67/62	63/58
	10	90/83	90/83	90/83	90/83	90/83	88/82	82/75	76/70	71/66	67/62	63/58
	15	82/75	82/75	82/75	82/75	82/75	82/75	82/75	76/70	71/66	67/62	63/58
	20	75/69	75/69	75/69	75/69	75/69	75/69	75/69	75/69	71/66	67/62	63/58
	25	70/64	70/64	70/64	70/64	70/64	70/64	70/64	70/64	70/64	67/62	63/58
	30	64/59	64/59	64/59	64/59	64/59	64/59	64/59	64/59	64/59	64/59	63/58
	35	60/55	60/55	60/55	60/55	60/55	60/55	60/55	60/55	60/55	60/55	60/55
	40	57/52	57/52	57/52	57/52	57/52	57/52	57/52	57/52	57/52	57/52	57/52
	45	54/49	54/49	54/49	54/49	54/49	54/49	54/49	54/49	54/49	54/49	54/49
	50	51/47	51/47	51/47	51/47	51/47	51/47	51/47	51/47	51/47	51/47	51/47
	55	49/45	49/45	49/45	49/45	49/45	49/45	49/45	49/45	49/45	49/45	49/45
	60	47/43	47/43	47/43	47/43	47/43	47/43	47/43	47/43	47/43	47/43	47/43
	70	43/40	43/40	43/40	43/40	43/40	43/40	43/40	43/40	43/40	43/40	43/40
	80	41/37	41/37	41/37	41/37	41/37	41/37	41/37	41/37	41/37	41/37	41/37
	90	38/35	38/35	38/35	38/35	38/35	38/35	38/35	38/35	38/35	38/35	38/35
	100	36/33	36/33	36/33	36/33	36/33	36/33	36/33	36/33	36/33	36/33	36/33
	110	35/32	35/32	35/32	35/32	35/32	35/32	35/32	35/32	35/32	35/32	35/32
	120	33/30	33/30	33/30	33/30	33/30	33/30	33/30	33/30	33/30	33/30	33/30
D	0	96/96	96/94	96/89	92/85	88/81	81/75	75/69	70/64	66/60	62/57	58/*
	5	96/93	96/93	96/89	92/85	88/81	81/75	75/69	70/64	66/60	62/57	58/*
	10	90/83	90/83	90/83	90/83	88/81	81/75	75/69	70/64	66/60	62/57	58/*
	15	82/75	82/75	82/75	82/75	82/75	81/75	75/69	70/64	66/60	62/57	58/*
	20	75/69	75/69	75/69	75/69	75/69	75/69	75/69	70/64	66/60	62/57	58/*
	25	70/64	70/64	70/64	70/64	70/64	70/64	70/64	69/64	66/60	62/57	58/*
	30	64/59	64/59	64/59	64/59	64/59	64/59	64/59	64/59	64/59	62/57	58/*
	35	60/55	60/55	60/55	60/55	60/55	60/55	60/55	60/55	60/55	60/55	58/*
	40	57/52	57/52	57/52	57/52	57/52	57/52	57/52	57/52	57/52	57/52	57/*
	45	54/49	54/49	54/49	54/49	54/49	54/49	54/49	54/49	54/49	54/49	54/*
	50	51/47	51/47	51/47	51/47	51/47	51/47	51/47	51/47	51/47	51/47	51/*
	55	49/45	49/45	49/45	49/45	49/45	49/45	49/45	49/45	49/45	49/45	49/*
	60	47/43	47/43	47/43	47/43	47/43	47/43	47/43	47/43	47/43	47/43	47/*
	70	43/40	43/40	43/40	43/40	43/40	43/40	43/40	43/40	43/40	43/40	43/*
	80	41/37	41/37	41/37	41/37	41/37	41/37	41/37	41/37	41/37	41/37	41/*
	90	38/35	38/35	38/35	38/35	38/35	38/35	38/35	38/35	38/35	38/35	38/*
	100	36/33	36/33	36/33	36/33	36/33	36/33	36/33	36/33	36/33	36/33	36/*
	110	35/32	35/32	35/32	35/32	35/32	35/32	35/32	35/32	35/32	35/32	35/*
	120	33/30	33/30	33/30	33/30	33/30	33/30	33/30	33/30	33/30	33/30	33/*

Notes – see page 52-55, and 95

T4d	Gable - Maximum Span (in) for Roof Slope 27° - 45° & Roof Area 1											H=30
Portrait		Wind Speed (mph)										
Exposure	Snow Load (psf)	100	105	110	115	120	130	140	150	160	170	180
B	0	96/95	96/95	96/95	96/95	96/95	96/95	94/88	88/82	82/76	77/71	72/67
	5	96/93	96/93	96/93	96/93	96/93	96/93	94/88	88/82	82/76	77/71	72/67
	10	90/83	90/83	90/83	90/83	90/83	90/83	90/83	88/82	82/76	77/71	72/67
	15	83/76	83/76	83/76	83/76	83/76	83/76	83/76	82/75	80/74	77/71	72/67
	20	77/71	77/71	77/71	77/71	77/71	77/71	77/71	76/70	74/69	73/67	72/66
	25	72/66	72/66	72/66	72/66	72/66	72/66	72/66	71/65	70/64	69/63	67/62
	30	67/61	67/61	67/61	67/61	67/61	67/61	67/61	67/61	66/61	65/60	64/59
	35	62/57	62/57	62/57	62/57	62/57	62/57	62/57	62/57	62/57	62/57	61/56
	40	59/54	59/54	59/54	59/54	59/54	59/54	59/54	59/54	59/54	59/54	58/54
	45	56/51	56/51	56/51	56/51	56/51	56/51	56/51	56/51	56/51	56/51	56/51
	50	53/49	53/49	53/49	53/49	53/49	53/49	53/49	53/49	53/49	53/49	53/49
	55	51/47	51/47	51/47	51/47	51/47	51/47	51/47	51/47	51/47	51/47	51/47
	60	49/45	49/45	49/45	49/45	49/45	49/45	49/45	49/45	49/45	49/45	49/45
	70	45/41	45/41	45/41	45/41	45/41	45/41	45/41	45/41	45/41	45/41	45/41
	80	42/39	42/39	42/39	42/39	42/39	42/39	42/39	42/39	42/39	42/39	42/39
	90	40/37	40/37	40/37	40/37	40/37	40/37	40/37	40/37	40/37	40/37	40/37
	100	38/35	38/35	38/35	38/35	38/35	38/35	38/35	38/35	38/35	38/35	38/35
	110	36/33	36/33	36/33	36/33	36/33	36/33	36/33	36/33	36/33	36/33	36/33
	120	34/32	34/32	34/32	34/32	34/32	34/32	34/32	34/32	34/32	34/32	34/32
C	0	96/95	96/95	96/95	96/90	93/87	85/80	79/73	73/68	68/63	64/59	60/55
	5	96/93	96/93	96/93	96/90	93/87	85/80	79/73	73/68	68/63	64/59	60/55
	10	90/83	90/83	90/83	90/83	90/83	85/80	79/73	73/68	68/63	64/59	60/55
	15	83/76	83/76	83/76	83/76	83/76	81/75	79/73	73/68	68/63	64/59	60/55
	20	77/71	77/71	77/71	77/71	77/71	75/69	74/68	72/66	68/63	64/59	60/55
	25	72/66	72/66	72/66	72/66	72/66	70/65	69/64	68/62	66/61	64/59	60/55
	30	67/61	67/61	67/61	67/61	67/61	66/61	65/60	64/59	63/58	62/57	60/55
	35	62/57	62/57	62/57	62/57	62/57	62/57	62/57	61/56	60/55	59/54	58/53
	40	59/54	59/54	59/54	59/54	59/54	59/54	59/54	58/54	57/53	56/52	55/51
	45	56/51	56/51	56/51	56/51	56/51	56/51	56/51	56/51	55/51	54/50	53/*
	50	53/49	53/49	53/49	53/49	53/49	53/49	53/49	53/49	53/49	52/48	52/*
	55	51/47	51/47	51/47	51/47	51/47	51/47	51/47	51/47	51/47	51/47	50/*
	60	49/45	49/45	49/45	49/45	49/45	49/45	49/45	49/45	49/45	49/45	48/*
	70	45/41	45/41	45/41	45/41	45/41	45/41	45/41	45/41	45/41	45/41	45/*
	80	42/39	42/39	42/39	42/39	42/39	42/39	42/39	42/39	42/39	42/39	42/*
	90	40/37	40/37	40/37	40/37	40/37	40/37	40/37	40/37	40/37	40/37	40/*
	100	38/35	38/35	38/35	38/35	38/35	38/35	38/35	38/35	38/35	38/35	38/*
	110	36/33	36/33	36/33	36/33	36/33	36/33	36/33	36/33	36/33	36/33	36/*
	120	34/32	34/32	34/32	34/32	34/32	34/32	34/32	34/32	34/32	34/32	34/*
D	0	96/95	96/91	93/87	89/83	85/79	78/73	72/67	67/62	62/58	58/54	54/50
	5	96/93	96/91	93/87	89/83	85/79	78/73	72/67	67/62	62/58	58/54	54/50
	10	90/83	90/83	90/83	89/83	85/79	78/73	72/67	67/62	62/58	58/54	54/*
	15	83/76	83/76	83/76	82/76	81/75	78/73	72/67	67/62	62/58	58/54	54/*
	20	77/71	77/71	77/71	76/70	75/69	73/68	71/66	67/62	62/58	58/54	54/*
	25	72/66	72/66	72/66	71/66	70/65	69/63	67/62	66/61	62/58	58/54	*/*
	30	67/61	67/61	67/61	67/61	66/61	65/60	64/59	62/58	61/56	58/*	*/*
	35	62/57	62/57	62/57	62/57	62/57	62/57	61/56	60/55	58/54	57/*	*/*
	40	59/54	59/54	59/54	59/54	59/54	59/54	58/54	57/53	56/52	55/*	*/*
	45	56/51	56/51	56/51	56/51	56/51	56/51	56/51	55/51	54/50	53/*	*/*
	50	53/49	53/49	53/49	53/49	53/49	53/49	53/49	53/49	52/48	51/*	*/*
	55	51/47	51/47	51/47	51/47	51/47	51/47	51/47	51/47	50/46	49/*	*/*
	60	49/45	49/45	49/45	49/45	49/45	49/45	49/45	49/45	49/45	48/*	*/*
	70	45/41	45/41	45/41	45/41	45/41	45/41	45/41	45/41	45/41	*/*	*/*
	80	42/39	42/39	42/39	42/39	42/39	42/39	42/39	42/39	42/*	*/*	*/*
	90	40/37	40/37	40/37	40/37	40/37	40/37	40/37	40/37	40/*	*/*	*/*
	100	38/35	38/35	38/35	38/35	38/35	38/35	38/35	38/35	38/*	*/*	*/*
	110	36/33	36/33	36/33	36/33	36/33	36/33	36/33	36/33	36/*	*/*	*/*
	120	34/32	34/32	34/32	34/32	34/32	34/32	34/32	34/32	34/*	*/*	*/*

Notes – see page 52-55, and 95

T5a	Gable - Maximum Span (in) for Roof Slope 0° - 7° & Roof Area 2											H=15
Landscape		Wind Speed (mph)										
Exposure	Snow Load (psf)	100	105	110	115	120	130	140	150	160	170	180
B	0	96	96	96	96	96	96	92	85	79	74	69
	5	96	96	96	96	96	96	92	85	79	74	69
	10	96	96	96	96	96	96	92	85	79	74	69
	15	88	88	88	88	88	88	88	85	79	74	69
	20	81	81	81	81	81	81	81	81	79	74	69
	25	79	79	79	79	79	79	79	79	79	74	69
	30	75	75	75	75	75	75	75	75	75	74	69
	35	70	70	70	70	70	70	70	70	70	70	69
	40	65	65	65	65	65	65	65	65	65	65	65
	45	62	62	62	62	62	62	62	62	62	62	62
	50	59	59	59	59	59	59	59	59	59	59	59
	55	56	56	56	56	56	56	56	56	56	56	56
	60	54	54	54	54	54	54	54	54	54	54	54
	70	50	50	50	50	50	50	50	50	50	50	50
	80	47	47	47	47	47	47	47	47	47	47	47
	90	44	44	44	44	44	44	44	44	44	44	44
	100	42	42	42	42	42	42	42	42	42	42	42
	110	40	40	40	40	40	40	40	40	40	40	40
	120	38	38	38	38	38	38	38	38	38	38	38
C	0	96	96	96	92	87	80	74	68	64	60	*
	5	96	96	96	92	87	80	74	68	64	60	*
	10	96	96	96	92	87	80	74	68	64	60	*
	15	88	88	88	88	87	80	74	68	64	60	*
	20	81	81	81	81	81	80	74	68	64	60	*
	25	79	79	79	79	79	79	74	68	64	60	*
	30	75	75	75	75	75	75	74	68	64	60	*
	35	70	70	70	70	70	70	70	68	64	60	*
	40	65	65	65	65	65	65	65	65	64	60	*
	45	62	62	62	62	62	62	62	62	62	60	*
	50	59	59	59	59	59	59	59	59	59	59	*
	55	56	56	56	56	56	56	56	56	56	56	*
	60	54	54	54	54	54	54	54	54	54	54	*
	70	50	50	50	50	50	50	50	50	50	50	*
	80	47	47	47	47	47	47	47	47	47	47	*
	90	44	44	44	44	44	44	44	44	44	44	*
	100	42	42	42	42	42	42	42	42	42	42	*
	110	40	40	40	40	40	40	40	40	40	40	*
	120	38	38	38	38	38	38	38	38	38	38	*
D	0	96	91	87	82	79	72	66	62	*	*	*
	5	96	91	87	82	79	72	66	62	*	*	*
	10	96	91	87	82	79	72	66	62	*	*	*
	15	88	88	87	82	79	72	66	62	*	*	*
	20	81	81	81	81	79	72	66	62	*	*	*
	25	79	79	79	79	79	72	66	62	*	*	*
	30	75	75	75	75	75	72	66	62	*	*	*
	35	70	70	70	70	70	70	66	62	*	*	*
	40	65	65	65	65	65	65	65	62	*	*	*
	45	62	62	62	62	62	62	62	62	*	*	*
	50	59	59	59	59	59	59	59	59	*	*	*
	55	56	56	56	56	56	56	56	56	*	*	*
	60	54	54	54	54	54	54	54	54	*	*	*
	70	50	50	50	50	50	50	50	50	*	*	*
	80	47	47	47	47	47	47	47	47	*	*	*
	90	44	44	44	44	44	44	44	44	*	*	*
	100	42	42	42	42	42	42	42	42	*	*	*
	110	40	40	40	40	40	40	40	40	*	*	*
	120	38	38	38	38	38	38	38	38	*	*	*

Notes – see page 52-55, and 95

T5b	Gable - Maximum Span (in) for Roof Slope 7° - 20° & Roof Area 2											H=15
Landscape		Wind Speed (mph)										
Exposure	Snow Load (psf)	100	105	110	115	120	130	140	150	160	170	180
B	0	96	96	96	96	93	85	78	72	67	63	60
	5	96	96	96	96	93	85	78	72	67	63	60
	10	94	94	94	94	93	85	78	72	67	63	60
	15	84	84	84	84	84	84	78	72	67	63	60
	20	77	77	77	77	77	77	77	72	67	63	60
	25	73	73	73	73	73	73	73	72	67	63	60
	30	68	68	68	68	68	68	68	68	67	63	60
	35	63	63	63	63	63	63	63	63	63	63	60
	40	59	59	59	59	59	59	59	59	59	59	59
	45	56	56	56	56	56	56	56	56	56	56	56
	50	53	53	53	53	53	53	53	53	53	53	53
	55	51	51	51	51	51	51	51	51	51	51	51
	60	49	49	49	49	49	49	49	49	49	49	49
	70	45	45	45	45	45	45	45	45	45	45	45
	80	43	43	43	43	43	43	43	43	43	43	43
	90	40	40	40	40	40	40	40	40	40	40	40
	100	38	38	38	38	38	38	38	38	38	38	38
	110	36	36	36	36	36	36	36	36	36	36	36
	120	35	35	35	35	35	35	35	35	35	35	35
C	0	92	87	83	78	75	68	63	59	*	*	*
	5	92	87	83	78	75	68	63	59	*	*	*
	10	92	87	83	78	75	68	63	59	*	*	*
	15	84	84	83	78	75	68	63	59	*	*	*
	20	77	77	77	77	75	68	63	59	*	*	*
	25	73	73	73	73	73	68	63	59	*	*	*
	30	68	68	68	68	68	68	63	59	*	*	*
	35	63	63	63	63	63	63	63	59	*	*	*
	40	59	59	59	59	59	59	59	59	*	*	*
	45	56	56	56	56	56	56	56	56	*	*	*
	50	53	53	53	53	53	53	53	53	*	*	*
	55	51	51	51	51	51	51	51	51	*	*	*
	60	49	49	49	49	49	49	49	49	*	*	*
	70	45	45	45	45	45	45	45	45	*	*	*
	80	43	43	43	43	43	43	43	43	*	*	*
	90	40	40	40	40	40	40	40	40	*	*	*
	100	38	38	38	38	38	38	38	38	*	*	*
	110	36	36	36	36	36	36	36	36	*	*	*
	120	35	35	35	35	35	35	35	35	*	*	*
D	0	82	78	74	70	67	62	57	*	*	*	*
	5	82	78	74	70	67	62	57	*	*	*	*
	10	82	78	74	70	67	62	57	*	*	*	*
	15	82	78	74	70	67	62	57	*	*	*	*
	20	77	77	74	70	67	62	*	*	*	*	*
	25	73	73	73	70	67	62	*	*	*	*	*
	30	68	68	68	68	67	62	*	*	*	*	*
	35	63	63	63	63	63	62	*	*	*	*	*
	40	59	59	59	59	59	59	*	*	*	*	*
	45	56	56	56	56	56	56	*	*	*	*	*
	50	53	53	53	53	53	53	*	*	*	*	*
	55	51	51	51	51	51	51	*	*	*	*	*
	60	49	49	49	49	49	49	*	*	*	*	*
	70	45	45	45	45	45	45	*	*	*	*	*
	80	43	43	43	43	43	43	*	*	*	*	*
	90	40	40	40	40	40	40	*	*	*	*	*
	100	38	38	38	38	38	38	*	*	*	*	*
	110	36	36	36	36	36	36	*	*	*	*	*
	120	35	35	35	35	35	35	*	*	*	*	*

Notes – see page 52-55, and 95

T5c	Gable - Maximum Span (in) for Roof Slope 20° - 27° & Roof Area 2											H=15
Landscape		Wind Speed (mph)										
Exposure	Snow Load (psf)	100	105	110	115	120	130	140	150	160	170	180
B	0	96	96	96	96	96	94	86	80	74	69	65
	5	96	96	96	96	96	94	86	80	74	69	65
	10	95	95	95	95	95	94	86	80	74	69	65
	15	87	87	87	87	87	87	86	80	74	69	65
	20	81	81	81	81	81	81	81	80	74	69	65
	25	75	75	75	75	75	75	75	75	74	69	65
	30	70	70	70	70	70	70	70	70	70	69	65
	35	66	66	66	66	66	66	66	66	66	66	65
	40	62	62	62	62	62	62	62	62	62	62	62
	45	59	59	59	59	59	59	59	59	59	59	59
	50	56	56	56	56	56	56	56	56	56	56	56
	55	53	53	53	53	53	53	53	53	53	53	53
	60	51	51	51	51	51	51	51	51	51	51	51
	70	48	48	48	48	48	48	48	48	48	48	48
	80	45	45	45	45	45	45	45	45	45	45	45
	90	42	42	42	42	42	42	42	42	42	42	42
	100	40	40	40	40	40	40	40	40	40	40	40
	110	38	38	38	38	38	38	38	38	38	38	38
	120	36	36	36	36	36	36	36	36	36	36	36
C	0	96	95	91	86	82	75	69	65	60	57	*
	5	96	95	91	86	82	75	69	65	60	57	*
	10	95	95	91	86	82	75	69	65	60	57	*
	15	87	87	87	86	82	75	69	65	60	57	*
	20	81	81	81	81	81	75	69	65	60	*	*
	25	75	75	75	75	75	75	69	65	60	*	*
	30	70	70	70	70	70	70	69	65	60	*	*
	35	66	66	66	66	66	66	66	65	60	*	*
	40	62	62	62	62	62	62	62	62	60	*	*
	45	59	59	59	59	59	59	59	59	59	*	*
	50	56	56	56	56	56	56	56	56	56	*	*
	55	53	53	53	53	53	53	53	53	53	*	*
	60	51	51	51	51	51	51	51	51	51	*	*
	70	48	48	48	48	48	48	48	48	48	*	*
	80	45	45	45	45	45	45	45	45	45	*	*
	90	42	42	42	42	42	42	42	42	42	*	*
	100	40	40	40	40	40	40	40	40	40	*	*
	110	38	38	38	38	38	38	38	38	38	*	*
	120	36	36	36	36	36	36	36	36	36	*	*
D	0	90	86	81	77	74	68	63	59	*	*	*
	5	90	86	81	77	74	68	63	59	*	*	*
	10	90	86	81	77	74	68	63	59	*	*	*
	15	87	86	81	77	74	68	63	59	*	*	*
	20	81	81	81	77	74	68	63	59	*	*	*
	25	75	75	75	75	74	68	63	59	*	*	*
	30	70	70	70	70	70	68	63	59	*	*	*
	35	66	66	66	66	66	66	63	59	*	*	*
	40	62	62	62	62	62	62	62	59	*	*	*
	45	59	59	59	59	59	59	59	59	*	*	*
	50	56	56	56	56	56	56	56	56	*	*	*
	55	53	53	53	53	53	53	53	53	*	*	*
	60	51	51	51	51	51	51	51	51	*	*	*
	70	48	48	48	48	48	48	48	48	*	*	*
	80	45	45	45	45	45	45	45	45	*	*	*
	90	42	42	42	42	42	42	42	42	*	*	*
	100	40	40	40	40	40	40	40	40	*	*	*
	110	38	38	38	38	38	38	38	38	*	*	*
	120	36	36	36	36	36	36	36	36	*	*	*

Notes – see page 52-55, and 95

T5d	Gable - Maximum Span (in) for Roof Slope 27° - 45° & Roof Area 2											H=15
Landscape		Wind Speed (mph)										
Exposure	Snow Load (psf)	100	105	110	115	120	130	140	150	160	170	180
B	0	96	96	96	96	96	96	94	87	82	77	72
	5	96	96	96	96	96	96	94	87	82	77	72
	10	96	96	96	96	96	96	94	87	82	77	72
	15	89	89	89	89	89	89	89	87	82	77	72
	20	82	82	82	82	82	82	82	82	81	77	72
	25	77	77	77	77	77	77	77	77	76	75	72
	30	73	73	73	73	73	73	73	73	72	71	70
	35	68	68	68	68	68	68	68	68	68	67	66
	40	65	65	65	65	65	65	65	65	65	65	64
	45	61	61	61	61	61	61	61	61	61	61	61
	50	58	58	58	58	58	58	58	58	58	58	58
	55	56	56	56	56	56	56	56	56	56	56	56
	60	54	54	54	54	54	54	54	54	54	54	54
	70	50	50	50	50	50	50	50	50	50	50	50
	80	47	47	47	47	47	47	47	47	47	47	47
	90	44	44	44	44	44	44	44	44	44	44	44
	100	42	42	42	42	42	42	42	42	42	42	42
	110	40	40	40	40	40	40	40	40	40	40	40
	120	38	38	38	38	38	38	38	38	38	38	38
C	0	96	96	96	94	90	83	77	71	67	63	59
	5	96	96	96	94	90	83	77	71	67	63	59
	10	96	96	96	94	90	83	77	71	67	63	59
	15	89	89	89	89	89	83	77	71	67	63	59
	20	82	82	82	82	82	81	77	71	67	63	59
	25	77	77	77	77	77	76	75	71	67	63	59
	30	73	73	73	73	73	72	71	69	67	63	59
	35	68	68	68	68	68	68	67	66	65	63	59
	40	65	65	65	65	65	65	65	64	62	61	59
	45	61	61	61	61	61	61	61	61	60	59	58
	50	58	58	58	58	58	58	58	58	58	57	56
	55	56	56	56	56	56	56	56	56	56	55	55
	60	54	54	54	54	54	54	54	54	54	54	53
	70	50	50	50	50	50	50	50	50	50	50	50
	80	47	47	47	47	47	47	47	47	47	47	47
	90	44	44	44	44	44	44	44	44	44	44	44
	100	42	42	42	42	42	42	42	42	42	42	42
	110	40	40	40	40	40	40	40	40	40	40	40
	120	38	38	38	38	38	38	38	38	38	38	38
D	0	96	93	89	85	81	75	69	65	61	57	*
	5	96	93	89	85	81	75	69	65	61	57	*
	10	96	93	89	85	81	75	69	65	61	57	*
	15	89	89	89	85	81	75	69	65	61	57	*
	20	82	82	82	82	81	75	69	65	61	57	*
	25	77	77	77	77	76	74	69	65	61	57	*
	30	73	73	73	73	72	70	69	65	61	*	*
	35	68	68	68	68	68	67	66	64	61	*	*
	40	65	65	65	65	65	64	63	62	61	*	*
	45	61	61	61	61	61	61	61	60	59	*	*
	50	58	58	58	58	58	58	58	58	57	*	*
	55	56	56	56	56	56	56	56	56	55	*	*
	60	54	54	54	54	54	54	54	54	53	*	*
	70	50	50	50	50	50	50	50	50	50	*	*
	80	47	47	47	47	47	47	47	47	47	*	*
	90	44	44	44	44	44	44	44	44	44	*	*
	100	42	42	42	42	42	42	42	42	42	*	*
	110	40	40	40	40	40	40	40	40	40	*	*
	120	38	38	38	38	38	38	38	38	38	*	*

Notes – see page 52-55, and 95

T6a	Gable - Maximum Span (in) for Roof Slope 0° - 7° & Roof Area 2											H=30
Landscape		Wind Speed (mph)										
Exposure	Snow Load (psf)	100	105	110	115	120	130	140	150	160	170	180
B	0	96	96	96	96	96	89	82	76	71	66	62
	5	96	96	96	96	96	89	82	76	71	66	62
	10	96	96	96	96	96	89	82	76	71	66	62
	15	88	88	88	88	88	88	82	76	71	66	62
	20	81	81	81	81	81	81	81	76	71	66	62
	25	79	79	79	79	79	79	79	76	71	66	62
	30	75	75	75	75	75	75	75	75	71	66	62
	35	70	70	70	70	70	70	70	70	70	66	62
	40	65	65	65	65	65	65	65	65	65	65	62
	45	62	62	62	62	62	62	62	62	62	62	62
	50	59	59	59	59	59	59	59	59	59	59	59
	55	56	56	56	56	56	56	56	56	56	56	56
	60	54	54	54	54	54	54	54	54	54	54	54
	70	50	50	50	50	50	50	50	50	50	50	50
	80	47	47	47	47	47	47	47	47	47	47	47
	90	44	44	44	44	44	44	44	44	44	44	44
	100	42	42	42	42	42	42	42	42	42	42	42
	110	40	40	40	40	40	40	40	40	40	40	40
	120	38	38	38	38	38	38	38	38	38	38	38
C	0	96	94	89	85	81	74	68	63	59	*	*
	5	96	94	89	85	81	74	68	63	59	*	*
	10	96	94	89	85	81	74	68	63	59	*	*
	15	88	88	88	85	81	74	68	63	59	*	*
	20	81	81	81	81	81	74	68	63	59	*	*
	25	79	79	79	79	79	74	68	63	59	*	*
	30	75	75	75	75	75	74	68	63	59	*	*
	35	70	70	70	70	70	70	68	63	59	*	*
	40	65	65	65	65	65	65	65	63	59	*	*
	45	62	62	62	62	62	62	62	62	59	*	*
	50	59	59	59	59	59	59	59	59	59	*	*
	55	56	56	56	56	56	56	56	56	56	*	*
	60	54	54	54	54	54	54	54	54	54	*	*
	70	50	50	50	50	50	50	50	50	50	*	*
	80	47	47	47	47	47	47	47	47	47	*	*
	90	44	44	44	44	44	44	44	44	44	*	*
	100	42	42	42	42	42	42	42	42	42	*	*
	110	40	40	40	40	40	40	40	40	40	*	*
	120	38	38	38	38	38	38	38	38	38	*	*
D	0	90	85	81	77	74	67	62	58	*	*	*
	5	90	85	81	77	74	67	62	58	*	*	*
	10	90	85	81	77	74	67	62	58	*	*	*
	15	88	85	81	77	74	67	62	58	*	*	*
	20	81	81	81	77	74	67	62	*	*	*	*
	25	79	79	79	77	74	67	62	*	*	*	*
	30	75	75	75	75	74	67	62	*	*	*	*
	35	70	70	70	70	70	67	62	*	*	*	*
	40	65	65	65	65	65	65	62	*	*	*	*
	45	62	62	62	62	62	62	62	*	*	*	*
	50	59	59	59	59	59	59	59	*	*	*	*
	55	56	56	56	56	56	56	56	*	*	*	*
	60	54	54	54	54	54	54	54	*	*	*	*
	70	50	50	50	50	50	50	50	*	*	*	*
	80	47	47	47	47	47	47	47	*	*	*	*
	90	44	44	44	44	44	44	44	*	*	*	*
	100	42	42	42	42	42	42	42	*	*	*	*
	110	40	40	40	40	40	40	40	*	*	*	*
	120	38	38	38	38	38	38	38	*	*	*	*

Notes – see page 52-55, and 95

T6b	Gable - Maximum Span (in) for Roof Slope 7° - 20° & Roof Area 2											H=30
Landscape		Wind Speed (mph)										
Exposure	Snow Load (psf)	100	105	110	115	120	130	140	150	160	170	180
B	0	96	96	92	88	83	76	70	65	61	57	*
	5	96	96	92	88	83	76	70	65	61	57	*
	10	94	94	92	88	83	76	70	65	61	57	*
	15	84	84	84	84	83	76	70	65	61	57	*
	20	77	77	77	77	77	76	70	65	61	*	*
	25	73	73	73	73	73	73	70	65	61	*	*
	30	68	68	68	68	68	68	68	65	61	*	*
	35	63	63	63	63	63	63	63	63	61	*	*
	40	59	59	59	59	59	59	59	59	59	*	*
	45	56	56	56	56	56	56	56	56	56	*	*
	50	53	53	53	53	53	53	53	53	53	*	*
	55	51	51	51	51	51	51	51	51	51	*	*
	60	49	49	49	49	49	49	49	49	49	*	*
	70	45	45	45	45	45	45	45	45	45	*	*
	80	43	43	43	43	43	43	43	43	43	*	*
	90	40	40	40	40	40	40	40	40	40	*	*
	100	38	38	38	38	38	38	38	38	38	*	*
	110	36	36	36	36	36	36	36	36	36	*	*
	120	35	35	35	35	35	35	35	35	35	*	*
C	0	85	80	76	72	69	63	59	*	*	*	*
	5	85	80	76	72	69	63	59	*	*	*	*
	10	85	80	76	72	69	63	59	*	*	*	*
	15	84	80	76	72	69	63	59	*	*	*	*
	20	77	77	76	72	69	63	59	*	*	*	*
	25	73	73	73	72	69	63	59	*	*	*	*
	30	68	68	68	68	68	63	59	*	*	*	*
	35	63	63	63	63	63	63	59	*	*	*	*
	40	59	59	59	59	59	59	59	*	*	*	*
	45	56	56	56	56	56	56	56	*	*	*	*
	50	53	53	53	53	53	53	53	*	*	*	*
	55	51	51	51	51	51	51	51	*	*	*	*
	60	49	49	49	49	49	49	49	*	*	*	*
	70	45	45	45	45	45	45	45	*	*	*	*
	80	43	43	43	43	43	43	43	*	*	*	*
	90	40	40	40	40	40	40	40	*	*	*	*
	100	38	38	38	38	38	38	38	*	*	*	*
	110	36	36	36	36	36	36	36	*	*	*	*
	120	35	35	35	35	35	35	35	*	*	*	*
D	0	77	73	69	66	63	58	*	*	*	*	*
	5	77	73	69	66	63	58	*	*	*	*	*
	10	77	73	69	66	63	58	*	*	*	*	*
	15	77	73	69	66	63	58	*	*	*	*	*
	20	77	73	69	66	63	58	*	*	*	*	*
	25	73	73	69	66	63	58	*	*	*	*	*
	30	68	68	68	66	63	*	*	*	*	*	*
	35	63	63	63	63	63	*	*	*	*	*	*
	40	59	59	59	59	59	*	*	*	*	*	*
	45	56	56	56	56	56	*	*	*	*	*	*
	50	53	53	53	53	53	*	*	*	*	*	*
	55	51	51	51	51	51	*	*	*	*	*	*
	60	49	49	49	49	49	*	*	*	*	*	*
	70	45	45	45	45	45	*	*	*	*	*	*
	80	43	43	43	43	43	*	*	*	*	*	*
	90	40	40	40	40	40	*	*	*	*	*	*
	100	38	38	38	38	38	*	*	*	*	*	*
	110	36	36	36	36	36	*	*	*	*	*	*
	120	35	35	35	35	35	*	*	*	*	*	*

Notes – see page 52-55, and 95

T6c	Gable - Maximum Span (in) for Roof Slope 20° - 27° & Roof Area 2											H=30
Landscape		Wind Speed (mph)										
Exposure	Snow Load (psf)	100	105	110	115	120	130	140	150	160	170	180
B	0	96	96	96	96	92	84	77	71	67	63	59
	5	96	96	96	96	92	84	77	71	67	63	59
	10	95	95	95	95	92	84	77	71	67	63	59
	15	87	87	87	87	87	84	77	71	67	63	59
	20	81	81	81	81	81	81	77	71	67	63	59
	25	75	75	75	75	75	75	75	71	67	63	59
	30	70	70	70	70	70	70	70	70	67	63	59
	35	66	66	66	66	66	66	66	66	66	63	59
	40	62	62	62	62	62	62	62	62	62	62	59
	45	59	59	59	59	59	59	59	59	59	59	59
	50	56	56	56	56	56	56	56	56	56	56	56
	55	53	53	53	53	53	53	53	53	53	53	53
	60	51	51	51	51	51	51	51	51	51	51	51
	70	48	48	48	48	48	48	48	48	48	48	48
	80	45	45	45	45	45	45	45	45	45	45	45
	90	42	42	42	42	42	42	42	42	42	42	42
	100	40	40	40	40	40	40	40	40	40	40	40
	110	38	38	38	38	38	38	38	38	38	38	38
	120	36	36	36	36	36	36	36	36	36	36	36
C	0	93	88	84	80	76	69	64	60	*	*	*
	5	93	88	84	80	76	69	64	60	*	*	*
	10	93	88	84	80	76	69	64	60	*	*	*
	15	87	87	84	80	76	69	64	60	*	*	*
	20	81	81	81	80	76	69	64	60	*	*	*
	25	75	75	75	75	75	69	64	60	*	*	*
	30	70	70	70	70	70	69	64	60	*	*	*
	35	66	66	66	66	66	66	64	60	*	*	*
	40	62	62	62	62	62	62	62	60	*	*	*
	45	59	59	59	59	59	59	59	59	*	*	*
	50	56	56	56	56	56	56	56	56	*	*	*
	55	53	53	53	53	53	53	53	53	*	*	*
	60	51	51	51	51	51	51	51	51	*	*	*
	70	48	48	48	48	48	48	48	48	*	*	*
	80	45	45	45	45	45	45	45	45	*	*	*
	90	42	42	42	42	42	42	42	42	*	*	*
	100	40	40	40	40	40	40	40	40	*	*	*
	110	38	38	38	38	38	38	38	38	*	*	*
	120	36	36	36	36	36	36	36	36	*	*	*
D	0	85	80	76	72	69	64	59	*	*	*	*
	5	85	80	76	72	69	64	59	*	*	*	*
	10	85	80	76	72	69	64	59	*	*	*	*
	15	85	80	76	72	69	64	59	*	*	*	*
	20	81	80	76	72	69	64	59	*	*	*	*
	25	75	75	75	72	69	64	59	*	*	*	*
	30	70	70	70	70	69	64	59	*	*	*	*
	35	66	66	66	66	66	64	59	*	*	*	*
	40	62	62	62	62	62	62	59	*	*	*	*
	45	59	59	59	59	59	59	59	*	*	*	*
	50	56	56	56	56	56	56	56	*	*	*	*
	55	53	53	53	53	53	53	53	*	*	*	*
	60	51	51	51	51	51	51	51	*	*	*	*
	70	48	48	48	48	48	48	48	*	*	*	*
	80	45	45	45	45	45	45	45	*	*	*	*
	90	42	42	42	42	42	42	42	*	*	*	*
	100	40	40	40	40	40	40	40	*	*	*	*
	110	38	38	38	38	38	38	38	*	*	*	*
	120	36	36	36	36	36	36	36	*	*	*	*

Notes – see page 52-55, and 95

T6d	Gable - Maximum Span (in) for Roof Slope 27° - 45° & Roof Area 2											H=30
Landscape		Wind Speed (mph)										
Exposure	Snow Load (psf)	100	105	110	115	120	130	140	150	160	170	180
B	0	96	96	96	96	96	91	85	79	74	69	65
	5	96	96	96	96	96	91	85	79	74	69	65
	10	96	96	96	96	96	91	85	79	74	69	65
	15	89	89	89	89	89	89	85	79	74	69	65
	20	82	82	82	82	82	82	82	79	74	69	65
	25	77	77	77	77	77	77	77	75	74	69	65
	30	73	73	73	73	73	73	73	71	70	69	65
	35	68	68	68	68	68	68	68	68	67	66	65
	40	65	65	65	65	65	65	65	65	64	63	62
	45	61	61	61	61	61	61	61	61	61	61	60
	50	58	58	58	58	58	58	58	58	58	58	58
	55	56	56	56	56	56	56	56	56	56	56	56
	60	54	54	54	54	54	54	54	54	54	54	54
	70	50	50	50	50	50	50	50	50	50	50	50
	80	47	47	47	47	47	47	47	47	47	47	47
	90	44	44	44	44	44	44	44	44	44	44	44
	100	42	42	42	42	42	42	42	42	42	42	42
	110	40	40	40	40	40	40	40	40	40	40	40
	120	38	38	38	38	38	38	38	38	38	38	38
C	0	96	96	91	87	83	77	71	66	62	58	*
	5	96	96	91	87	83	77	71	66	62	58	*
	10	96	96	91	87	83	77	71	66	62	58	*
	15	89	89	89	87	83	77	71	66	62	58	*
	20	82	82	82	82	81	77	71	66	62	58	*
	25	77	77	77	77	76	75	71	66	62	58	*
	30	73	73	73	73	72	71	69	66	62	58	*
	35	68	68	68	68	68	67	66	65	62	58	*
	40	65	65	65	65	65	65	63	62	61	58	*
	45	61	61	61	61	61	61	61	60	59	58	*
	50	58	58	58	58	58	58	58	58	57	56	*
	55	56	56	56	56	56	56	56	56	55	54	*
	60	54	54	54	54	54	54	54	54	54	53	*
	70	50	50	50	50	50	50	50	50	50	50	*
	80	47	47	47	47	47	47	47	47	47	47	*
	90	44	44	44	44	44	44	44	44	44	44	*
	100	42	42	42	42	42	42	42	42	42	42	*
	110	40	40	40	40	40	40	40	40	40	40	*
	120	38	38	38	38	38	38	38	38	38	38	*
D	0	92	88	84	80	76	70	65	61	57	*	*
	5	92	88	84	80	76	70	65	61	57	*	*
	10	92	88	84	80	76	70	65	61	57	*	*
	15	89	88	84	80	76	70	65	61	57	*	*
	20	82	82	81	80	76	70	65	61	57	*	*
	25	77	77	76	76	75	70	65	61	57	*	*
	30	73	73	72	72	71	69	65	61	*	*	*
	35	68	68	68	68	67	66	65	61	*	*	*
	40	65	65	65	65	65	63	62	61	*	*	*
	45	61	61	61	61	61	61	60	59	*	*	*
	50	58	58	58	58	58	58	58	57	*	*	*
	55	56	56	56	56	56	56	56	55	*	*	*
	60	54	54	54	54	54	54	54	53	*	*	*
	70	50	50	50	50	50	50	50	50	*	*	*
	80	47	47	47	47	47	47	47	47	*	*	*
	90	44	44	44	44	44	44	44	44	*	*	*
	100	42	42	42	42	42	42	42	42	*	*	*
	110	40	40	40	40	40	40	40	40	*	*	*
	120	38	38	38	38	38	38	38	38	*	*	*

Notes – see page 52-55, and 95

T7a	Gable - Maximum Span (in) for Roof Slope 0° - 7° & Roof Area 2											H=15
Portrait		Wind Speed (mph)										
Exposure	Snow Load (psf)	100	105	110	115	120	130	140	150	160	170	180
B	0	96/96	96/96	96/96	96/96	96/96	96/94	93/86	86/80	80/74	75/69	70/65
	5	96/96	96/96	96/96	96/96	96/96	96/94	93/86	86/80	80/74	75/69	70/65
	10	95/87	95/87	95/87	95/87	95/87	95/87	93/86	86/80	80/74	75/69	70/65
	15	86/79	86/79	86/79	86/79	86/79	86/79	86/79	86/79	80/74	75/69	70/65
	20	79/72	79/72	79/72	79/72	79/72	79/72	79/72	79/72	79/72	75/69	70/65
	25	77/71	77/71	77/71	77/71	77/71	77/71	77/71	77/71	77/71	75/69	70/65
	30	72/67	72/67	72/67	72/67	72/67	72/67	72/67	72/67	72/67	72/67	70/65
	35	67/62	67/62	67/62	67/62	67/62	67/62	67/62	67/62	67/62	67/62	67/62
	40	63/58	63/58	63/58	63/58	63/58	63/58	63/58	63/58	63/58	63/58	63/58
	45	60/55	60/55	60/55	60/55	60/55	60/55	60/55	60/55	60/55	60/55	60/55
	50	57/52	57/52	57/52	57/52	57/52	57/52	57/52	57/52	57/52	57/52	57/52
	55	54/50	54/50	54/50	54/50	54/50	54/50	54/50	54/50	54/50	54/50	54/50
	60	52/48	52/48	52/48	52/48	52/48	52/48	52/48	52/48	52/48	52/48	52/48
	70	48/44	48/44	48/44	48/44	48/44	48/44	48/44	48/44	48/44	48/44	48/44
	80	45/42	45/42	45/42	45/42	45/42	45/42	45/42	45/42	45/42	45/42	45/42
	90	43/39	43/39	43/39	43/39	43/39	43/39	43/39	43/39	43/39	43/39	43/39
	100	40/37	40/37	40/37	40/37	40/37	40/37	40/37	40/37	40/37	40/37	40/37
	110	39/35	39/35	39/35	39/35	39/35	39/35	39/35	39/35	39/35	39/35	39/35
	120	37/34	37/34	37/34	37/34	37/34	37/34	37/34	37/34	37/34	37/34	37/34
C	0	96/96	96/96	96/91	93/86	89/82	81/75	75/69	69/64	64/60	60/56	57/*
	5	96/96	96/96	96/91	93/86	89/82	81/75	75/69	69/64	64/60	60/56	57/*
	10	95/87	95/87	95/87	93/86	89/82	81/75	75/69	69/64	64/60	60/56	57/*
	15	86/79	86/79	86/79	86/79	86/79	81/75	75/69	69/64	64/60	60/56	57/*
	20	79/72	79/72	79/72	79/72	79/72	79/72	75/69	69/64	64/60	60/*	*/*
	25	77/71	77/71	77/71	77/71	77/71	77/71	75/69	69/64	64/60	60/*	*/*
	30	72/67	72/67	72/67	72/67	72/67	72/67	72/67	69/64	64/60	60/*	*/*
	35	67/62	67/62	67/62	67/62	67/62	67/62	67/62	67/62	64/60	60/*	*/*
	40	63/58	63/58	63/58	63/58	63/58	63/58	63/58	63/58	63/58	60/*	*/*
	45	60/55	60/55	60/55	60/55	60/55	60/55	60/55	60/55	60/55	60/*	*/*
	50	57/52	57/52	57/52	57/52	57/52	57/52	57/52	57/52	57/52	57/*	*/*
	55	54/50	54/50	54/50	54/50	54/50	54/50	54/50	54/50	54/50	54/*	*/*
	60	52/48	52/48	52/48	52/48	52/48	52/48	52/48	52/48	52/48	52/*	*/*
	70	48/44	48/44	48/44	48/44	48/44	48/44	48/44	48/44	48/44	48/*	*/*
	80	45/42	45/42	45/42	45/42	45/42	45/42	45/42	45/42	45/42	45/*	*/*
	90	43/39	43/39	43/39	43/39	43/39	43/39	43/39	43/39	43/39	43/*	*/*
	100	40/37	40/37	40/37	40/37	40/37	40/37	40/37	40/37	40/37	40/*	*/*
	110	39/35	39/35	39/35	39/35	39/35	39/35	39/35	39/35	39/35	39/*	*/*
	120	37/34	37/34	37/34	37/34	37/34	37/34	37/34	37/34	37/34	37/*	*/*
D	0	96/91	93/86	88/81	84/77	80/74	73/67	67/62	62/57	58/*	*/*	*/*
	5	96/91	93/86	88/81	84/77	80/74	73/67	67/62	62/57	58/*	*/*	*/*
	10	95/87	93/86	88/81	84/77	80/74	73/67	67/62	62/57	58/*	*/*	*/*
	15	86/79	86/79	86/79	84/77	80/74	73/67	67/62	62/57	58/*	*/*	*/*
	20	79/72	79/72	79/72	79/72	79/72	73/67	67/62	62/57	58/*	*/*	*/*
	25	77/71	77/71	77/71	77/71	77/71	73/67	67/62	62/57	58/*	*/*	*/*
	30	72/67	72/67	72/67	72/67	72/67	72/67	67/62	62/57	58/*	*/*	*/*
	35	67/62	67/62	67/62	67/62	67/62	67/62	67/62	62/57	58/*	*/*	*/*
	40	63/58	63/58	63/58	63/58	63/58	63/58	63/58	62/57	58/*	*/*	*/*
	45	60/55	60/55	60/55	60/55	60/55	60/55	60/55	60/55	*/*	*/*	*/*
	50	57/52	57/52	57/52	57/52	57/52	57/52	57/52	57/52	*/*	*/*	*/*
	55	54/50	54/50	54/50	54/50	54/50	54/50	54/50	54/50	*/*	*/*	*/*
	60	52/48	52/48	52/48	52/48	52/48	52/48	52/48	52/48	*/*	*/*	*/*
	70	48/44	48/44	48/44	48/44	48/44	48/44	48/44	48/*	*/*	*/*	*/*
	80	45/42	45/42	45/42	45/42	45/42	45/42	45/42	45/*	*/*	*/*	*/*
	90	43/39	43/39	43/39	43/39	43/39	43/39	43/39	43/*	*/*	*/*	*/*
	100	40/37	40/37	40/37	40/37	40/37	40/37	40/37	40/*	*/*	*/*	*/*
	110	39/35	39/35	39/35	39/35	39/35	39/35	39/35	39/*	*/*	*/*	*/*
	120	37/34	37/34	37/34	37/34	37/34	37/34	37/34	37/*	*/*	*/*	*/*

Notes – see page 52-55, and 95

T7b	Gable - Maximum Span (in) for Roof Slope 7° - 20° & Roof Area 2											H=15
Portrait		Wind Speed (mph)										
Exposure	Snow Load (psf)	100	105	110	115	120	130	140	150	160	170	180
B	0	96/96	96/96	96/96	96/95	96/91	89/83	82/76	76/70	70/65	65/61	61/57
	5	96/94	96/94	96/94	96/94	96/91	89/83	82/76	76/70	70/65	65/61	61/57
	10	90/83	90/83	90/83	90/83	90/83	89/83	82/76	76/70	70/65	65/61	61/57
	15	81/75	81/75	81/75	81/75	81/75	81/75	81/75	76/70	70/65	65/61	61/57
	20	74/68	74/68	74/68	74/68	74/68	74/68	74/68	74/68	70/65	65/61	61/57
	25	69/63	69/63	69/63	69/63	69/63	69/63	69/63	69/63	69/63	65/61	61/57
	30	63/58	63/58	63/58	63/58	63/58	63/58	63/58	63/58	63/58	63/58	61/57
	35	59/54	59/54	59/54	59/54	59/54	59/54	59/54	59/54	59/54	59/54	59/54
	40	55/51	55/51	55/51	55/51	55/51	55/51	55/51	55/51	55/51	55/51	55/51
	45	52/48	52/48	52/48	52/48	52/48	52/48	52/48	52/48	52/48	52/48	52/*
	50	50/46	50/46	50/46	50/46	50/46	50/46	50/46	50/46	50/46	50/46	50/*
	55	48/44	48/44	48/44	48/44	48/44	48/44	48/44	48/44	48/44	48/44	48/*
	60	46/42	46/42	46/42	46/42	46/42	46/42	46/42	46/42	46/42	46/42	46/*
	70	42/39	42/39	42/39	42/39	42/39	42/39	42/39	42/39	42/39	42/39	42/*
	80	40/36	40/36	40/36	40/36	40/36	40/36	40/36	40/36	40/36	40/36	40/*
	90	37/34	37/34	37/34	37/34	37/34	37/34	37/34	37/34	37/34	37/34	37/*
	100	35/32	35/32	35/32	35/32	35/32	35/32	35/32	35/32	35/32	35/32	35/*
	110	34/31	34/31	34/31	34/31	34/31	34/31	34/31	34/31	34/31	34/31	34/*
	120	32/29	32/29	32/29	32/29	32/29	32/29	32/29	32/29	32/29	32/29	32/*
C	0	96/90	91/85	86/80	82/76	78/73	71/66	65/61	60/56	56/52	*/*	*/*
	5	96/90	91/85	86/80	82/76	78/73	71/66	65/61	60/56	56/52	*/*	*/*
	10	90/83	90/83	86/80	82/76	78/73	71/66	65/61	60/56	56/*	*/*	*/*
	15	81/75	81/75	81/75	81/75	78/73	71/66	65/61	60/56	56/*	*/*	*/*
	20	74/68	74/68	74/68	74/68	74/68	71/66	65/61	60/56	56/*	*/*	*/*
	25	69/63	69/63	69/63	69/63	69/63	69/63	65/61	60/56	*/*	*/*	*/*
	30	63/58	63/58	63/58	63/58	63/58	63/58	63/58	60/56	*/*	*/*	*/*
	35	59/54	59/54	59/54	59/54	59/54	59/54	59/54	59/*	*/*	*/*	*/*
	40	55/51	55/51	55/51	55/51	55/51	55/51	55/51	55/*	*/*	*/*	*/*
	45	52/48	52/48	52/48	52/48	52/48	52/48	52/48	52/*	*/*	*/*	*/*
	50	50/46	50/46	50/46	50/46	50/46	50/46	50/46	50/*	*/*	*/*	*/*
	55	48/44	48/44	48/44	48/44	48/44	48/44	48/44	48/*	*/*	*/*	*/*
	60	46/42	46/42	46/42	46/42	46/42	46/42	46/42	46/*	*/*	*/*	*/*
	70	42/39	42/39	42/39	42/39	42/39	42/39	42/39	42/*	*/*	*/*	*/*
	80	40/36	40/36	40/36	40/36	40/36	40/36	40/36	40/*	*/*	*/*	*/*
	90	37/34	37/34	37/34	37/34	37/34	37/34	37/34	37/*	*/*	*/*	*/*
	100	35/32	35/32	35/32	35/32	35/32	35/32	35/32	35/*	*/*	*/*	*/*
	110	34/31	34/31	34/31	34/31	34/31	34/31	34/31	34/*	*/*	*/*	*/*
	120	32/29	32/29	32/29	32/29	32/29	32/29	32/29	32/*	*/*	*/*	*/*
D	0	86/80	81/76	77/72	73/68	70/65	64/59	58/54	54/*	*/*	*/*	*/*
	5	86/80	81/76	77/72	73/68	70/65	64/59	58/54	54/*	*/*	*/*	*/*
	10	86/80	81/76	77/72	73/68	70/65	64/59	58/54	54/*	*/*	*/*	*/*
	15	81/75	81/75	77/72	73/68	70/65	64/59	58/54	*/*	*/*	*/*	*/*
	20	74/68	74/68	74/68	73/68	70/65	64/59	58/*	*/*	*/*	*/*	*/*
	25	69/63	69/63	69/63	69/63	69/63	64/59	58/*	*/*	*/*	*/*	*/*
	30	63/58	63/58	63/58	63/58	63/58	63/58	58/*	*/*	*/*	*/*	*/*
	35	59/54	59/54	59/54	59/54	59/54	59/54	58/*	*/*	*/*	*/*	*/*
	40	55/51	55/51	55/51	55/51	55/51	55/51	55/*	*/*	*/*	*/*	*/*
	45	52/48	52/48	52/48	52/48	52/48	52/48	52/*	*/*	*/*	*/*	*/*
	50	50/46	50/46	50/46	50/46	50/46	50/46	50/*	*/*	*/*	*/*	*/*
	55	48/44	48/44	48/44	48/44	48/44	48/44	*/*	*/*	*/*	*/*	*/*
	60	46/42	46/42	46/42	46/42	46/42	46/42	*/*	*/*	*/*	*/*	*/*
	70	42/39	42/39	42/39	42/39	42/39	42/39	*/*	*/*	*/*	*/*	*/*
	80	40/36	40/36	40/36	40/36	40/36	40/*	*/*	*/*	*/*	*/*	*/*
	90	37/34	37/34	37/34	37/34	37/34	37/*	*/*	*/*	*/*	*/*	*/*
	100	35/32	35/32	35/32	35/32	35/32	35/*	*/*	*/*	*/*	*/*	*/*
	110	34/31	34/31	34/31	34/31	34/31	34/*	*/*	*/*	*/*	*/*	*/*
	120	32/29	32/29	32/29	32/29	32/29	32/*	*/*	*/*	*/*	*/*	*/*

Notes – see page 52-55, and 95

T7c	Gable - Maximum Span (in) for Roof Slope 20° - 27° & Roof Area 2											H=15
Portrait		Wind Speed (mph)										
Exposure	Snow Load (psf)	100	105	110	115	120	130	140	150	160	170	180
B	0	96/96	96/96	96/96	96/96	96/96	96/90	89/83	83/77	77/71	72/67	67/63
	5	96/93	96/93	96/93	96/93	96/93	96/90	89/83	83/77	77/71	72/67	67/63
	10	90/83	90/83	90/83	90/83	90/83	90/83	89/83	83/77	77/71	72/67	67/63
	15	82/75	82/75	82/75	82/75	82/75	82/75	82/75	82/75	77/71	72/67	67/63
	20	75/69	75/69	75/69	75/69	75/69	75/69	75/69	75/69	75/69	72/67	67/63
	25	70/64	70/64	70/64	70/64	70/64	70/64	70/64	70/64	70/64	70/64	67/63
	30	64/59	64/59	64/59	64/59	64/59	64/59	64/59	64/59	64/59	64/59	64/59
	35	60/55	60/55	60/55	60/55	60/55	60/55	60/55	60/55	60/55	60/55	60/55
	40	57/52	57/52	57/52	57/52	57/52	57/52	57/52	57/52	57/52	57/52	57/52
	45	54/49	54/49	54/49	54/49	54/49	54/49	54/49	54/49	54/49	54/49	54/49
	50	51/47	51/47	51/47	51/47	51/47	51/47	51/47	51/47	51/47	51/47	51/47
	55	49/45	49/45	49/45	49/45	49/45	49/45	49/45	49/45	49/45	49/45	49/45
	60	47/43	47/43	47/43	47/43	47/43	47/43	47/43	47/43	47/43	47/43	47/43
	70	43/40	43/40	43/40	43/40	43/40	43/40	43/40	43/40	43/40	43/40	43/40
	80	41/37	41/37	41/37	41/37	41/37	41/37	41/37	41/37	41/37	41/37	41/37
	90	38/35	38/35	38/35	38/35	38/35	38/35	38/35	38/35	38/35	38/35	38/35
	100	36/33	36/33	36/33	36/33	36/33	36/33	36/33	36/33	36/33	36/33	36/33
	110	35/32	35/32	35/32	35/32	35/32	35/32	35/32	35/32	35/32	35/32	35/32
	120	33/30	33/30	33/30	33/30	33/30	33/30	33/30	33/30	33/30	33/30	33/30
C	0	96/96	96/92	94/87	89/83	85/79	78/73	72/67	66/62	62/57	58/53	54/*
	5	96/93	96/92	94/87	89/83	85/79	78/73	72/67	66/62	62/57	58/53	54/*
	10	90/83	90/83	90/83	89/83	85/79	78/73	72/67	66/62	62/57	58/53	54/*
	15	82/75	82/75	82/75	82/75	82/75	78/73	72/67	66/62	62/57	58/53	*/*
	20	75/69	75/69	75/69	75/69	75/69	75/69	72/67	66/62	62/57	58/*	*/*
	25	70/64	70/64	70/64	70/64	70/64	70/64	70/64	66/62	62/57	58/*	*/*
	30	64/59	64/59	64/59	64/59	64/59	64/59	64/59	64/59	62/57	58/*	*/*
	35	60/55	60/55	60/55	60/55	60/55	60/55	60/55	60/55	60/55	58/*	*/*
	40	57/52	57/52	57/52	57/52	57/52	57/52	57/52	57/52	57/52	57/*	*/*
	45	54/49	54/49	54/49	54/49	54/49	54/49	54/49	54/49	54/49	54/*	*/*
	50	51/47	51/47	51/47	51/47	51/47	51/47	51/47	51/47	51/47	*/*	*/*
	55	49/45	49/45	49/45	49/45	49/45	49/45	49/45	49/45	49/45	*/*	*/*
	60	47/43	47/43	47/43	47/43	47/43	47/43	47/43	47/43	47/*	*/*	*/*
	70	43/40	43/40	43/40	43/40	43/40	43/40	43/40	43/40	43/*	*/*	*/*
	80	41/37	41/37	41/37	41/37	41/37	41/37	41/37	41/37	41/*	*/*	*/*
	90	38/35	38/35	38/35	38/35	38/35	38/35	38/35	38/35	38/*	*/*	*/*
	100	36/33	36/33	36/33	36/33	36/33	36/33	36/33	36/33	36/*	*/*	*/*
	110	35/32	35/32	35/32	35/32	35/32	35/32	35/32	35/32	35/*	*/*	*/*
	120	33/30	33/30	33/30	33/30	33/30	33/30	33/30	33/30	33/*	*/*	*/*
D	0	94/87	89/83	84/78	80/75	77/71	70/65	64/60	60/55	55/*	*/*	*/*
	5	94/87	89/83	84/78	80/75	77/71	70/65	64/60	60/55	55/*	*/*	*/*
	10	90/83	89/83	84/78	80/75	77/71	70/65	64/60	60/55	55/*	*/*	*/*
	15	82/75	82/75	82/75	80/75	77/71	70/65	64/60	60/55	55/*	*/*	*/*
	20	75/69	75/69	75/69	75/69	75/69	70/65	64/60	60/55	55/*	*/*	*/*
	25	70/64	70/64	70/64	70/64	70/64	70/64	64/60	60/55	*/*	*/*	*/*
	30	64/59	64/59	64/59	64/59	64/59	64/59	64/59	60/*	*/*	*/*	*/*
	35	60/55	60/55	60/55	60/55	60/55	60/55	60/55	60/*	*/*	*/*	*/*
	40	57/52	57/52	57/52	57/52	57/52	57/52	57/52	57/*	*/*	*/*	*/*
	45	54/49	54/49	54/49	54/49	54/49	54/49	54/49	54/*	*/*	*/*	*/*
	50	51/47	51/47	51/47	51/47	51/47	51/47	51/47	51/*	*/*	*/*	*/*
	55	49/45	49/45	49/45	49/45	49/45	49/45	49/45	49/*	*/*	*/*	*/*
	60	47/43	47/43	47/43	47/43	47/43	47/43	47/43	47/*	*/*	*/*	*/*
	70	43/40	43/40	43/40	43/40	43/40	43/40	43/40	43/*	*/*	*/*	*/*
	80	41/37	41/37	41/37	41/37	41/37	41/37	41/37	41/*	*/*	*/*	*/*
	90	38/35	38/35	38/35	38/35	38/35	38/35	38/35	38/*	*/*	*/*	*/*
	100	36/33	36/33	36/33	36/33	36/33	36/33	36/33	36/*	*/*	*/*	*/*
	110	35/32	35/32	35/32	35/32	35/32	35/32	35/32	35/*	*/*	*/*	*/*
	120	33/30	33/30	33/30	33/30	33/30	33/30	33/30	33/*	*/*	*/*	*/*

Notes – see page 52-55, and 95

T7d	Gable - Maximum Span (in) for Roof Slope 27° - 45° & Roof Area 2											H=15
Portrait		Wind Speed (mph)										
Exposure	Snow Load (psf)	100	105	110	115	120	130	140	150	160	170	180
B	0	96/95	96/95	96/95	96/95	96/95	96/95	95/88	89/83	83/77	78/73	74/68
	5	96/93	96/93	96/93	96/93	96/93	96/93	95/88	89/83	83/77	78/73	74/68
	10	90/83	90/83	90/83	90/83	90/83	90/83	90/83	89/83	83/77	78/73	74/68
	15	83/76	83/76	83/76	83/76	83/76	83/76	83/76	83/76	83/76	78/73	74/68
	20	77/71	77/71	77/71	77/71	77/71	77/71	77/71	77/71	76/70	75/69	74/68
	25	72/66	72/66	72/66	72/66	72/66	72/66	72/66	72/66	71/66	70/65	69/64
	30	67/61	67/61	67/61	67/61	67/61	67/61	67/61	67/61	67/61	66/61	66/60
	35	62/57	62/57	62/57	62/57	62/57	62/57	62/57	62/57	62/57	62/57	62/57
	40	59/54	59/54	59/54	59/54	59/54	59/54	59/54	59/54	59/54	59/54	59/54
	45	56/51	56/51	56/51	56/51	56/51	56/51	56/51	56/51	56/51	56/51	56/51
	50	53/49	53/49	53/49	53/49	53/49	53/49	53/49	53/49	53/49	53/49	53/49
	55	51/47	51/47	51/47	51/47	51/47	51/47	51/47	51/47	51/47	51/47	51/47
	60	49/45	49/45	49/45	49/45	49/45	49/45	49/45	49/45	49/45	49/45	49/45
	70	45/41	45/41	45/41	45/41	45/41	45/41	45/41	45/41	45/41	45/41	45/41
	80	42/39	42/39	42/39	42/39	42/39	42/39	42/39	42/39	42/39	42/39	42/39
	90	40/37	40/37	40/37	40/37	40/37	40/37	40/37	40/37	40/37	40/37	40/37
	100	38/35	38/35	38/35	38/35	38/35	38/35	38/35	38/35	38/35	38/35	38/35
	110	36/33	36/33	36/33	36/33	36/33	36/33	36/33	36/33	36/33	36/33	36/33
	120	34/32	34/32	34/32	34/32	34/32	34/32	34/32	34/32	34/32	34/32	34/32
C	0	96/95	96/95	96/92	95/89	91/85	84/78	78/73	73/68	68/63	64/59	60/56
	5	96/93	96/93	96/92	95/89	91/85	84/78	78/73	73/68	68/63	64/59	60/56
	10	90/83	90/83	90/83	90/83	90/83	84/78	78/73	73/68	68/63	64/59	60/56
	15	83/76	83/76	83/76	83/76	83/76	83/76	78/73	73/68	68/63	64/59	60/56
	20	77/71	77/71	77/71	77/71	77/71	77/71	75/69	73/68	68/63	64/59	60/56
	25	72/66	72/66	72/66	72/66	72/66	72/66	70/65	69/64	68/63	64/59	60/56
	30	67/61	67/61	67/61	67/61	67/61	67/61	66/61	65/60	64/59	63/58	60/56
	35	62/57	62/57	62/57	62/57	62/57	62/57	62/57	62/57	61/56	60/55	59/55
	40	59/54	59/54	59/54	59/54	59/54	59/54	59/54	59/54	58/54	58/53	57/52
	45	56/51	56/51	56/51	56/51	56/51	56/51	56/51	56/51	56/51	55/51	54/50
	50	53/49	53/49	53/49	53/49	53/49	53/49	53/49	53/49	53/49	53/49	53/48
	55	51/47	51/47	51/47	51/47	51/47	51/47	51/47	51/47	51/47	51/47	51/*
	60	49/45	49/45	49/45	49/45	49/45	49/45	49/45	49/45	49/45	49/45	49/*
	70	45/41	45/41	45/41	45/41	45/41	45/41	45/41	45/41	45/41	45/41	45/*
	80	42/39	42/39	42/39	42/39	42/39	42/39	42/39	42/39	42/39	42/39	42/*
	90	40/37	40/37	40/37	40/37	40/37	40/37	40/37	40/37	40/37	40/37	40/*
	100	38/35	38/35	38/35	38/35	38/35	38/35	38/35	38/35	38/35	38/35	38/*
	110	36/33	36/33	36/33	36/33	36/33	36/33	36/33	36/33	36/33	36/33	36/*
	120	34/32	34/32	34/32	34/32	34/32	34/32	34/32	34/32	34/32	34/32	34/*
D	0	96/92	95/88	91/84	87/80	83/77	76/71	71/66	66/61	61/57	57/53	54/*
	5	96/92	95/88	91/84	87/80	83/77	76/71	71/66	66/61	61/57	57/53	54/*
	10	90/83	90/83	90/83	87/80	83/77	76/71	71/66	66/61	61/57	57/53	54/*
	15	83/76	83/76	83/76	83/76	82/76	76/71	71/66	66/61	61/57	57/53	*/*
	20	77/71	77/71	77/71	77/71	76/70	75/69	71/66	66/61	61/57	57/*	*/*
	25	72/66	72/66	72/66	72/66	71/66	70/65	69/63	66/61	61/57	57/*	*/*
	30	67/61	67/61	67/61	67/61	67/61	66/61	65/60	64/59	61/57	57/*	*/*
	35	62/57	62/57	62/57	62/57	62/57	62/57	62/57	61/56	60/55	57/*	*/*
	40	59/54	59/54	59/54	59/54	59/54	59/54	59/54	58/53	57/53	56/*	*/*
	45	56/51	56/51	56/51	56/51	56/51	56/51	56/51	56/51	55/50	54/*	*/*
	50	53/49	53/49	53/49	53/49	53/49	53/49	53/49	53/49	53/49	52/*	*/*
	55	51/47	51/47	51/47	51/47	51/47	51/47	51/47	51/47	51/47	50/*	*/*
	60	49/45	49/45	49/45	49/45	49/45	49/45	49/45	49/45	49/45	49/*	*/*
	70	45/41	45/41	45/41	45/41	45/41	45/41	45/41	45/41	45/41	*/*	*/*
	80	42/39	42/39	42/39	42/39	42/39	42/39	42/39	42/39	42/39	*/*	*/*
	90	40/37	40/37	40/37	40/37	40/37	40/37	40/37	40/37	40/*	*/*	*/*
	100	38/35	38/35	38/35	38/35	38/35	38/35	38/35	38/35	38/*	*/*	*/*
	110	36/33	36/33	36/33	36/33	36/33	36/33	36/33	36/33	36/*	*/*	*/*
	120	34/32	34/32	34/32	34/32	34/32	34/32	34/32	34/32	34/*	*/*	*/*

Notes – see page 52-55, and 95

T8a	Gable - Maximum Span (in) for Roof Slope 0° - 7° & Roof Area 2											H=30
Portrait		Wind Speed (mph)										
Exposure	Snow Load (psf)	100	105	110	115	120	130	140	150	160	170	180
B	0	96/96	96/96	96/96	96/96	96/92	90/84	83/77	77/71	72/66	67/62	63/58
	5	96/96	96/96	96/96	96/96	96/92	90/84	83/77	77/71	72/66	67/62	63/58
	10	95/87	95/87	95/87	95/87	95/87	90/84	83/77	77/71	72/66	67/62	63/58
	15	86/79	86/79	86/79	86/79	86/79	86/79	83/77	77/71	72/66	67/62	63/58
	20	79/72	79/72	79/72	79/72	79/72	79/72	79/72	77/71	72/66	67/62	63/58
	25	77/71	77/71	77/71	77/71	77/71	77/71	77/71	77/71	72/66	67/62	63/58
	30	72/67	72/67	72/67	72/67	72/67	72/67	72/67	72/67	72/66	67/62	63/58
	35	67/62	67/62	67/62	67/62	67/62	67/62	67/62	67/62	67/62	67/62	63/58
	40	63/58	63/58	63/58	63/58	63/58	63/58	63/58	63/58	63/58	63/58	63/58
	45	60/55	60/55	60/55	60/55	60/55	60/55	60/55	60/55	60/55	60/55	60/55
	50	57/52	57/52	57/52	57/52	57/52	57/52	57/52	57/52	57/52	57/52	57/52
	55	54/50	54/50	54/50	54/50	54/50	54/50	54/50	54/50	54/50	54/50	54/50
	60	52/48	52/48	52/48	52/48	52/48	52/48	52/48	52/48	52/48	52/48	52/48
	70	48/44	48/44	48/44	48/44	48/44	48/44	48/44	48/44	48/44	48/44	48/44
	80	45/42	45/42	45/42	45/42	45/42	45/42	45/42	45/42	45/42	45/42	45/42
	90	43/39	43/39	43/39	43/39	43/39	43/39	43/39	43/39	43/39	43/39	43/39
	100	40/37	40/37	40/37	40/37	40/37	40/37	40/37	40/37	40/37	40/37	40/37
	110	39/35	39/35	39/35	39/35	39/35	39/35	39/35	39/35	39/35	39/35	39/35
	120	37/34	37/34	37/34	37/34	37/34	37/34	37/34	37/34	37/34	37/34	37/34
C	0	96/93	95/88	90/84	86/79	82/76	75/69	69/64	64/59	59/55	*/*	*/*
	5	96/93	95/88	90/84	86/79	82/76	75/69	69/64	64/59	59/55	*/*	*/*
	10	95/87	95/87	90/84	86/79	82/76	75/69	69/64	64/59	59/55	*/*	*/*
	15	86/79	86/79	86/79	86/79	82/76	75/69	69/64	64/59	59/*	*/*	*/*
	20	79/72	79/72	79/72	79/72	79/72	75/69	69/64	64/59	59/*	*/*	*/*
	25	77/71	77/71	77/71	77/71	77/71	75/69	69/64	64/59	59/*	*/*	*/*
	30	72/67	72/67	72/67	72/67	72/67	72/67	69/64	64/59	59/*	*/*	*/*
	35	67/62	67/62	67/62	67/62	67/62	67/62	67/62	64/59	59/*	*/*	*/*
	40	63/58	63/58	63/58	63/58	63/58	63/58	63/58	63/58	59/*	*/*	*/*
	45	60/55	60/55	60/55	60/55	60/55	60/55	60/55	60/55	59/*	*/*	*/*
	50	57/52	57/52	57/52	57/52	57/52	57/52	57/52	57/52	57/*	*/*	*/*
	55	54/50	54/50	54/50	54/50	54/50	54/50	54/50	54/50	54/*	*/*	*/*
	60	52/48	52/48	52/48	52/48	52/48	52/48	52/48	52/48	52/*	*/*	*/*
	70	48/44	48/44	48/44	48/44	48/44	48/44	48/44	48/44	48/*	*/*	*/*
	80	45/42	45/42	45/42	45/42	45/42	45/42	45/42	45/42	45/*	*/*	*/*
	90	43/39	43/39	43/39	43/39	43/39	43/39	43/39	43/39	43/*	*/*	*/*
	100	40/37	40/37	40/37	40/37	40/37	40/37	40/37	40/37	40/*	*/*	*/*
	110	39/35	39/35	39/35	39/35	39/35	39/35	39/35	39/35	39/*	*/*	*/*
	120	37/34	37/34	37/34	37/34	37/34	37/34	37/34	37/34	37/*	*/*	*/*
D	0	91/85	87/80	82/76	78/72	75/69	68/63	63/58	58/*	*/*	*/*	*/*
	5	91/85	87/80	82/76	78/72	75/69	68/63	63/58	58/*	*/*	*/*	*/*
	10	91/85	87/80	82/76	78/72	75/69	68/63	63/58	58/*	*/*	*/*	*/*
	15	86/79	86/79	82/76	78/72	75/69	68/63	63/58	58/*	*/*	*/*	*/*
	20	79/72	79/72	79/72	78/72	75/69	68/63	63/58	58/*	*/*	*/*	*/*
	25	77/71	77/71	77/71	77/71	75/69	68/63	63/58	58/*	*/*	*/*	*/*
	30	72/67	72/67	72/67	72/67	72/67	68/63	63/58	58/*	*/*	*/*	*/*
	35	67/62	67/62	67/62	67/62	67/62	67/62	63/58	58/*	*/*	*/*	*/*
	40	63/58	63/58	63/58	63/58	63/58	63/58	63/58	58/*	*/*	*/*	*/*
	45	60/55	60/55	60/55	60/55	60/55	60/55	60/55	58/*	*/*	*/*	*/*
	50	57/52	57/52	57/52	57/52	57/52	57/52	57/52	57/*	*/*	*/*	*/*
	55	54/50	54/50	54/50	54/50	54/50	54/50	54/50	*/*	*/*	*/*	*/*
	60	52/48	52/48	52/48	52/48	52/48	52/48	52/48	*/*	*/*	*/*	*/*
	70	48/44	48/44	48/44	48/44	48/44	48/44	48/44	*/*	*/*	*/*	*/*
	80	45/42	45/42	45/42	45/42	45/42	45/42	45/42	*/*	*/*	*/*	*/*
	90	43/39	43/39	43/39	43/39	43/39	43/39	43/39	*/*	*/*	*/*	*/*
	100	40/37	40/37	40/37	40/37	40/37	40/37	40/*	*/*	*/*	*/*	*/*
	110	39/35	39/35	39/35	39/35	39/35	39/35	39/*	*/*	*/*	*/*	*/*
	120	37/34	37/34	37/34	37/34	37/34	37/34	37/*	*/*	*/*	*/*	*/*

Notes – see page 52-55, and 95

T8b	Gable - Maximum Span (in) for Roof Slope 7° - 20° & Roof Area 2											H=30
Portrait		Wind Speed (mph)										
Exposure	Snow Load (psf)	100	105	110	115	120	130	140	150	160	170	180
B	0	96/96	96/95	96/90	91/85	87/81	80/74	73/68	67/63	63/58	58/54	55/*
	5	96/94	96/94	96/90	91/85	87/81	80/74	73/68	67/63	63/58	58/54	55/*
	10	90/83	90/83	90/83	90/83	87/81	80/74	73/68	67/63	63/58	58/54	55/*
	15	81/75	81/75	81/75	81/75	81/75	80/74	73/68	67/63	63/58	58/54	55/*
	20	74/68	74/68	74/68	74/68	74/68	74/68	73/68	67/63	63/58	58/*	*/*
	25	69/63	69/63	69/63	69/63	69/63	69/63	69/63	67/63	63/58	58/*	*/*
	30	63/58	63/58	63/58	63/58	63/58	63/58	63/58	63/58	63/58	58/*	*/*
	35	59/54	59/54	59/54	59/54	59/54	59/54	59/54	59/54	59/54	58/*	*/*
	40	55/51	55/51	55/51	55/51	55/51	55/51	55/51	55/51	55/51	55/*	*/*
	45	52/48	52/48	52/48	52/48	52/48	52/48	52/48	52/48	52/48	52/*	*/*
	50	50/46	50/46	50/46	50/46	50/46	50/46	50/46	50/46	50/46	*/*	*/*
	55	48/44	48/44	48/44	48/44	48/44	48/44	48/44	48/44	48/44	*/*	*/*
	60	46/42	46/42	46/42	46/42	46/42	46/42	46/42	46/42	46/42	*/*	*/*
	70	42/39	42/39	42/39	42/39	42/39	42/39	42/39	42/39	42/*	*/*	*/*
	80	40/36	40/36	40/36	40/36	40/36	40/36	40/36	40/36	40/*	*/*	*/*
	90	37/34	37/34	37/34	37/34	37/34	37/34	37/34	37/34	37/*	*/*	*/*
	100	35/32	35/32	35/32	35/32	35/32	35/32	35/32	35/32	35/*	*/*	*/*
	110	34/31	34/31	34/31	34/31	34/31	34/31	34/31	34/31	34/*	*/*	*/*
	120	32/29	32/29	32/29	32/29	32/29	32/29	32/29	32/29	32/*	*/*	*/*
C	0	88/82	84/78	79/74	75/70	72/67	65/61	60/56	55/*	*/*	*/*	*/*
	5	88/82	84/78	79/74	75/70	72/67	65/61	60/56	55/*	*/*	*/*	*/*
	10	88/82	84/78	79/74	75/70	72/67	65/61	60/56	55/*	*/*	*/*	*/*
	15	81/75	81/75	79/74	75/70	72/67	65/61	60/56	55/*	*/*	*/*	*/*
	20	74/68	74/68	74/68	74/68	72/67	65/61	60/56	*/*	*/*	*/*	*/*
	25	69/63	69/63	69/63	69/63	69/63	65/61	60/56	*/*	*/*	*/*	*/*
	30	63/58	63/58	63/58	63/58	63/58	63/58	60/56	*/*	*/*	*/*	*/*
	35	59/54	59/54	59/54	59/54	59/54	59/54	59/*	*/*	*/*	*/*	*/*
	40	55/51	55/51	55/51	55/51	55/51	55/51	55/*	*/*	*/*	*/*	*/*
	45	52/48	52/48	52/48	52/48	52/48	52/48	52/*	*/*	*/*	*/*	*/*
	50	50/46	50/46	50/46	50/46	50/46	50/46	50/*	*/*	*/*	*/*	*/*
	55	48/44	48/44	48/44	48/44	48/44	48/44	48/*	*/*	*/*	*/*	*/*
	60	46/42	46/42	46/42	46/42	46/42	46/42	46/*	*/*	*/*	*/*	*/*
	70	42/39	42/39	42/39	42/39	42/39	42/39	42/*	*/*	*/*	*/*	*/*
	80	40/36	40/36	40/36	40/36	40/36	40/36	40/*	*/*	*/*	*/*	*/*
	90	37/34	37/34	37/34	37/34	37/34	37/34	37/*	*/*	*/*	*/*	*/*
	100	35/32	35/32	35/32	35/32	35/32	35/32	35/*	*/*	*/*	*/*	*/*
	110	34/31	34/31	34/31	34/31	34/31	34/31	34/*	*/*	*/*	*/*	*/*
	120	32/29	32/29	32/29	32/29	32/29	32/29	32/*	*/*	*/*	*/*	*/*
D	0	80/75	76/71	72/67	68/64	65/61	59/55	55/*	*/*	*/*	*/*	*/*
	5	80/75	76/71	72/67	68/64	65/61	59/55	55/*	*/*	*/*	*/*	*/*
	10	80/75	76/71	72/67	68/64	65/61	59/55	55/*	*/*	*/*	*/*	*/*
	15	80/75	76/71	72/67	68/64	65/61	59/55	*/*	*/*	*/*	*/*	*/*
	20	74/68	74/68	72/67	68/64	65/61	59/55	*/*	*/*	*/*	*/*	*/*
	25	69/63	69/63	69/63	68/63	65/61	59/55	*/*	*/*	*/*	*/*	*/*
	30	63/58	63/58	63/58	63/58	63/58	59/*	*/*	*/*	*/*	*/*	*/*
	35	59/54	59/54	59/54	59/54	59/54	59/*	*/*	*/*	*/*	*/*	*/*
	40	55/51	55/51	55/51	55/51	55/51	55/*	*/*	*/*	*/*	*/*	*/*
	45	52/48	52/48	52/48	52/48	52/48	52/*	*/*	*/*	*/*	*/*	*/*
	50	50/46	50/46	50/46	50/46	50/46	50/*	*/*	*/*	*/*	*/*	*/*
	55	48/44	48/44	48/44	48/44	48/44	48/*	*/*	*/*	*/*	*/*	*/*
	60	46/42	46/42	46/42	46/42	46/42	46/*	*/*	*/*	*/*	*/*	*/*
	70	42/39	42/39	42/39	42/39	42/39	*/*	*/*	*/*	*/*	*/*	*/*
	80	40/36	40/36	40/36	40/36	40/36	*/*	*/*	*/*	*/*	*/*	*/*
	90	37/34	37/34	37/34	37/34	37/34	*/*	*/*	*/*	*/*	*/*	*/*
	100	35/32	35/32	35/32	35/32	35/32	*/*	*/*	*/*	*/*	*/*	*/*
	110	34/31	34/31	34/31	34/31	34/31	*/*	*/*	*/*	*/*	*/*	*/*
	120	32/29	32/29	32/29	32/29	32/29	*/*	*/*	*/*	*/*	*/*	*/*

Notes – see page 52-55, and 95

T8c	Gable - Maximum Span (in) for Roof Slope 20° - 27° & Roof Area 2											H=30
Portrait		Wind Speed (mph)										
Exposure	Snow Load (psf)	100	105	110	115	120	130	140	150	160	170	180
B	0	96/96	96/96	96/96	96/92	95/88	87/81	80/74	74/69	69/64	64/60	60/56
	5	96/93	96/93	96/93	96/92	95/88	87/81	80/74	74/69	69/64	64/60	60/56
	10	90/83	90/83	90/83	90/83	90/83	87/81	80/74	74/69	69/64	64/60	60/56
	15	82/75	82/75	82/75	82/75	82/75	82/75	80/74	74/69	69/64	64/60	60/56
	20	75/69	75/69	75/69	75/69	75/69	75/69	75/69	74/69	69/64	64/60	60/56
	25	70/64	70/64	70/64	70/64	70/64	70/64	70/64	70/64	69/64	64/60	60/56
	30	64/59	64/59	64/59	64/59	64/59	64/59	64/59	64/59	64/59	64/59	60/56
	35	60/55	60/55	60/55	60/55	60/55	60/55	60/55	60/55	60/55	60/55	60/55
	40	57/52	57/52	57/52	57/52	57/52	57/52	57/52	57/52	57/52	57/52	57/*
	45	54/49	54/49	54/49	54/49	54/49	54/49	54/49	54/49	54/49	54/49	54/*
	50	51/47	51/47	51/47	51/47	51/47	51/47	51/47	51/47	51/47	51/47	51/*
	55	49/45	49/45	49/45	49/45	49/45	49/45	49/45	49/45	49/45	49/45	49/*
	60	47/43	47/43	47/43	47/43	47/43	47/43	47/43	47/43	47/43	47/43	47/*
	70	43/40	43/40	43/40	43/40	43/40	43/40	43/40	43/40	43/40	43/40	43/*
	80	41/37	41/37	41/37	41/37	41/37	41/37	41/37	41/37	41/37	41/37	41/*
	90	38/35	38/35	38/35	38/35	38/35	38/35	38/35	38/35	38/35	38/35	38/*
	100	36/33	36/33	36/33	36/33	36/33	36/33	36/33	36/33	36/33	36/33	36/*
	110	35/32	35/32	35/32	35/32	35/32	35/32	35/32	35/32	35/32	35/32	35/*
	120	33/30	33/30	33/30	33/30	33/30	33/30	33/30	33/30	33/30	33/30	33/*
C	0	96/90	91/85	87/81	82/77	79/73	72/67	66/61	61/57	57/53	*/*	*/*
	5	96/90	91/85	87/81	82/77	79/73	72/67	66/61	61/57	57/53	*/*	*/*
	10	90/83	90/83	87/81	82/77	79/73	72/67	66/61	61/57	57/53	*/*	*/*
	15	82/75	82/75	82/75	82/75	79/73	72/67	66/61	61/57	57/*	*/*	*/*
	20	75/69	75/69	75/69	75/69	75/69	72/67	66/61	61/57	57/*	*/*	*/*
	25	70/64	70/64	70/64	70/64	70/64	70/64	66/61	61/57	57/*	*/*	*/*
	30	64/59	64/59	64/59	64/59	64/59	64/59	64/59	61/57	57/*	*/*	*/*
	35	60/55	60/55	60/55	60/55	60/55	60/55	60/55	60/55	*/*	*/*	*/*
	40	57/52	57/52	57/52	57/52	57/52	57/52	57/52	57/52	*/*	*/*	*/*
	45	54/49	54/49	54/49	54/49	54/49	54/49	54/49	54/49	*/*	*/*	*/*
	50	51/47	51/47	51/47	51/47	51/47	51/47	51/47	51/*	*/*	*/*	*/*
	55	49/45	49/45	49/45	49/45	49/45	49/45	49/45	49/*	*/*	*/*	*/*
	60	47/43	47/43	47/43	47/43	47/43	47/43	47/43	47/*	*/*	*/*	*/*
	70	43/40	43/40	43/40	43/40	43/40	43/40	43/40	43/*	*/*	*/*	*/*
	80	41/37	41/37	41/37	41/37	41/37	41/37	41/37	41/*	*/*	*/*	*/*
	90	38/35	38/35	38/35	38/35	38/35	38/35	38/35	38/*	*/*	*/*	*/*
	100	36/33	36/33	36/33	36/33	36/33	36/33	36/33	36/*	*/*	*/*	*/*
	110	35/32	35/32	35/32	35/32	35/32	35/32	35/32	35/*	*/*	*/*	*/*
	120	33/30	33/30	33/30	33/30	33/30	33/30	33/30	33/*	*/*	*/*	*/*
D	0	88/82	83/77	79/73	75/70	72/66	65/61	60/56	56/*	*/*	*/*	*/*
	5	88/82	83/77	79/73	75/70	72/66	65/61	60/56	56/*	*/*	*/*	*/*
	10	88/82	83/77	79/73	75/70	72/66	65/61	60/56	56/*	*/*	*/*	*/*
	15	82/75	82/75	79/73	75/70	72/66	65/61	60/56	56/*	*/*	*/*	*/*
	20	75/69	75/69	75/69	75/69	72/66	65/61	60/56	56/*	*/*	*/*	*/*
	25	70/64	70/64	70/64	70/64	70/64	65/61	60/56	*/*	*/*	*/*	*/*
	30	64/59	64/59	64/59	64/59	64/59	64/59	60/56	*/*	*/*	*/*	*/*
	35	60/55	60/55	60/55	60/55	60/55	60/55	60/*	*/*	*/*	*/*	*/*
	40	57/52	57/52	57/52	57/52	57/52	57/52	57/*	*/*	*/*	*/*	*/*
	45	54/49	54/49	54/49	54/49	54/49	54/49	54/*	*/*	*/*	*/*	*/*
	50	51/47	51/47	51/47	51/47	51/47	51/47	51/*	*/*	*/*	*/*	*/*
	55	49/45	49/45	49/45	49/45	49/45	49/45	49/*	*/*	*/*	*/*	*/*
	60	47/43	47/43	47/43	47/43	47/43	47/43	47/*	*/*	*/*	*/*	*/*
	70	43/40	43/40	43/40	43/40	43/40	43/40	43/*	*/*	*/*	*/*	*/*
	80	41/37	41/37	41/37	41/37	41/37	41/37	41/*	*/*	*/*	*/*	*/*
	90	38/35	38/35	38/35	38/35	38/35	38/35	38/*	*/*	*/*	*/*	*/*
	100	36/33	36/33	36/33	36/33	36/33	36/33	36/*	*/*	*/*	*/*	*/*
	110	35/32	35/32	35/32	35/32	35/32	35/32	35/*	*/*	*/*	*/*	*/*
	120	33/30	33/30	33/30	33/30	33/30	33/30	33/*	*/*	*/*	*/*	*/*

Notes – see page 52-55, and 95

T8d	Gable - Maximum Span (in) for Roof Slope 27° - 45° & Roof Area 2											H=30
Portrait		Wind Speed (mph)										
Exposure	Snow Load (psf)	100	105	110	115	120	130	140	150	160	170	180
B	0	96/95	96/95	96/95	96/95	96/93	93/86	86/80	80/75	75/70	71/65	66/62
	5	96/93	96/93	96/93	96/93	96/93	93/86	86/80	80/75	75/70	71/65	66/62
	10	90/83	90/83	90/83	90/83	90/83	90/83	86/80	80/75	75/70	71/65	66/62
	15	83/76	83/76	83/76	83/76	83/76	83/76	83/76	80/75	75/70	71/65	66/62
	20	77/71	77/71	77/71	77/71	77/71	77/71	77/71	76/70	74/69	71/65	66/62
	25	72/66	72/66	72/66	72/66	72/66	72/66	72/66	71/65	70/64	69/63	66/62
	30	67/61	67/61	67/61	67/61	67/61	67/61	67/61	67/61	66/61	65/60	64/59
	35	62/57	62/57	62/57	62/57	62/57	62/57	62/57	62/57	62/57	62/57	61/56
	40	59/54	59/54	59/54	59/54	59/54	59/54	59/54	59/54	59/54	59/54	58/54
	45	56/51	56/51	56/51	56/51	56/51	56/51	56/51	56/51	56/51	56/51	56/51
	50	53/49	53/49	53/49	53/49	53/49	53/49	53/49	53/49	53/49	53/49	53/49
	55	51/47	51/47	51/47	51/47	51/47	51/47	51/47	51/47	51/47	51/47	51/47
	60	49/45	49/45	49/45	49/45	49/45	49/45	49/45	49/45	49/45	49/45	49/45
	70	45/41	45/41	45/41	45/41	45/41	45/41	45/41	45/41	45/41	45/41	45/41
	80	42/39	42/39	42/39	42/39	42/39	42/39	42/39	42/39	42/39	42/39	42/39
	90	40/37	40/37	40/37	40/37	40/37	40/37	40/37	40/37	40/37	40/37	40/37
	100	38/35	38/35	38/35	38/35	38/35	38/35	38/35	38/35	38/35	38/35	38/35
	110	36/33	36/33	36/33	36/33	36/33	36/33	36/33	36/33	36/33	36/33	36/33
	120	34/32	34/32	34/32	34/32	34/32	34/32	34/32	34/32	34/32	34/32	34/32
C	0	96/94	96/90	93/86	89/82	85/79	78/73	72/67	67/63	63/58	59/55	55/*
	5	96/93	96/90	93/86	89/82	85/79	78/73	72/67	67/63	63/58	59/55	55/*
	10	90/83	90/83	90/83	89/82	85/79	78/73	72/67	67/63	63/58	59/55	55/*
	15	83/76	83/76	83/76	83/76	83/76	78/73	72/67	67/63	63/58	59/55	55/*
	20	77/71	77/71	77/71	77/71	77/71	75/69	72/67	67/63	63/58	59/55	55/*
	25	72/66	72/66	72/66	72/66	72/66	70/65	69/64	67/62	63/58	59/55	55/*
	30	67/61	67/61	67/61	67/61	67/61	66/61	65/60	64/59	63/58	59/55	*/*
	35	62/57	62/57	62/57	62/57	62/57	62/57	62/57	61/56	60/55	59/*	*/*
	40	59/54	59/54	59/54	59/54	59/54	59/54	59/54	58/54	57/53	56/*	*/*
	45	56/51	56/51	56/51	56/51	56/51	56/51	56/51	56/51	55/51	54/*	*/*
	50	53/49	53/49	53/49	53/49	53/49	53/49	53/49	53/49	53/49	52/*	*/*
	55	51/47	51/47	51/47	51/47	51/47	51/47	51/47	51/47	51/47	51/*	*/*
	60	49/45	49/45	49/45	49/45	49/45	49/45	49/45	49/45	49/45	49/*	*/*
	70	45/41	45/41	45/41	45/41	45/41	45/41	45/41	45/41	45/41	45/*	*/*
	80	42/39	42/39	42/39	42/39	42/39	42/39	42/39	42/39	42/39	42/*	*/*
	90	40/37	40/37	40/37	40/37	40/37	40/37	40/37	40/37	40/37	40/*	*/*
	100	38/35	38/35	38/35	38/35	38/35	38/35	38/35	38/35	38/35	38/*	*/*
	110	36/33	36/33	36/33	36/33	36/33	36/33	36/33	36/33	36/33	36/*	*/*
	120	34/32	34/32	34/32	34/32	34/32	34/32	34/32	34/32	34/32	34/*	*/*
D	0	94/87	89/83	85/79	81/76	78/72	72/67	66/62	62/57	57/53	54/*	*/*
	5	94/87	89/83	85/79	81/76	78/72	72/67	66/62	62/57	57/53	54/*	*/*
	10	90/83	89/83	85/79	81/76	78/72	72/67	66/62	62/57	57/53	54/*	*/*
	15	83/76	83/76	83/76	81/76	78/72	72/67	66/62	62/57	57/53	*/*	*/*
	20	77/71	77/71	77/71	76/70	75/69	72/67	66/62	62/57	57/*	*/*	*/*
	25	72/66	72/66	72/66	71/66	70/65	69/63	66/62	62/57	57/*	*/*	*/*
	30	67/61	67/61	67/61	67/61	66/61	65/60	64/59	62/57	57/*	*/*	*/*
	35	62/57	62/57	62/57	62/57	62/57	62/57	61/56	60/55	57/*	*/*	*/*
	40	59/54	59/54	59/54	59/54	59/54	59/54	58/54	57/53	56/*	*/*	*/*
	45	56/51	56/51	56/51	56/51	56/51	56/51	56/51	55/51	54/*	*/*	*/*
	50	53/49	53/49	53/49	53/49	53/49	53/49	53/49	53/49	52/*	*/*	*/*
	55	51/47	51/47	51/47	51/47	51/47	51/47	51/47	51/47	50/*	*/*	*/*
	60	49/45	49/45	49/45	49/45	49/45	49/45	49/45	49/45	49/*	*/*	*/*
	70	45/41	45/41	45/41	45/41	45/41	45/41	45/41	45/41	*/*	*/*	*/*
	80	42/39	42/39	42/39	42/39	42/39	42/39	42/39	42/39	*/*	*/*	*/*
	90	40/37	40/37	40/37	40/37	40/37	40/37	40/37	40/37	*/*	*/*	*/*
	100	38/35	38/35	38/35	38/35	38/35	38/35	38/35	38/*	*/*	*/*	*/*
	110	36/33	36/33	36/33	36/33	36/33	36/33	36/33	36/*	*/*	*/*	*/*
	120	34/32	34/32	34/32	34/32	34/32	34/32	34/32	34/*	*/*	*/*	*/*

Notes – see page 52-55, and 95

T9a	Gable - Maximum Span (in) for Roof Slope 0° - 7° & Roof Area 3										H=15
Landscape	Wind Speed (mph)										
Exposure	Snow Load (psf)	100	105	110	115	120	130	140	150	160	170	180
B	0	96	96	96	96	91	83	76	71	66	62	58
	5	96	96	96	96	91	83	76	71	66	62	58
	10	96	96	96	96	91	83	76	71	66	62	58
	15	88	88	88	88	88	83	76	71	66	62	58
	20	81	81	81	81	81	81	76	71	66	62	58
	25	79	79	79	79	79	79	76	71	66	62	58
	30	75	75	75	75	75	75	75	71	66	62	58
	35	70	70	70	70	70	70	70	70	66	62	58
	40	65	65	65	65	65	65	65	65	65	62	58
	45	62	62	62	62	62	62	62	62	62	62	58
	50	59	59	59	59	59	59	59	59	59	59	58
	55	56	56	56	56	56	56	56	56	56	56	56
	60	54	54	54	54	54	54	54	54	54	54	54
	70	50	50	50	50	50	50	50	50	50	50	50
	80	47	47	47	47	47	47	47	47	47	47	47
	90	44	44	44	44	44	44	44	44	44	44	44
	100	42	42	42	42	42	42	42	42	42	42	42
	110	40	40	40	40	40	40	40	40	40	40	40
	120	38	38	38	38	38	38	38	38	38	38	38
C	0	90	85	81	77	73	67	62	58	54	51	*
	5	90	85	81	77	73	67	62	58	54	51	*
	10	90	85	81	77	73	67	62	58	54	51	*
	15	88	85	81	77	73	67	62	58	54	51	*
	20	81	81	81	77	73	67	62	58	54	51	*
	25	79	79	79	77	73	67	62	58	54	51	*
	30	75	75	75	75	73	67	62	58	54	51	*
	35	70	70	70	70	70	67	62	58	54	51	*
	40	65	65	65	65	65	65	62	58	54	51	*
	45	62	62	62	62	62	62	62	58	54	51	*
	50	59	59	59	59	59	59	59	58	54	51	*
	55	56	56	56	56	56	56	56	56	54	51	*
	60	54	54	54	54	54	54	54	54	54	51	*
	70	50	50	50	50	50	50	50	50	50	50	*
	80	47	47	47	47	47	47	47	47	47	47	*
	90	44	44	44	44	44	44	44	44	44	44	*
	100	42	42	42	42	42	42	42	42	42	42	*
	110	40	40	40	40	40	40	40	40	40	40	*
	120	38	38	38	38	38	38	38	38	38	38	*
D	0	80	76	72	69	66	60	56	52	*	*	*
	5	80	76	72	69	66	60	56	52	*	*	*
	10	80	76	72	69	66	60	56	52	*	*	*
	15	80	76	72	69	66	60	56	52	*	*	*
	20	80	76	72	69	66	60	56	52	*	*	*
	25	79	76	72	69	66	60	56	52	*	*	*
	30	75	75	72	69	66	60	56	52	*	*	*
	35	70	70	70	69	66	60	56	52	*	*	*
	40	65	65	65	65	65	60	56	52	*	*	*
	45	62	62	62	62	62	60	56	52	*	*	*
	50	59	59	59	59	59	59	56	52	*	*	*
	55	56	56	56	56	56	56	56	52	*	*	*
	60	54	54	54	54	54	54	54	52	*	*	*
	70	50	50	50	50	50	50	50	50	*	*	*
	80	47	47	47	47	47	47	47	47	*	*	*
	90	44	44	44	44	44	44	44	44	*	*	*
	100	42	42	42	42	42	42	42	42	*	*	*
	110	40	40	40	40	40	40	40	40	*	*	*
	120	38	38	38	38	38	38	38	38	*	*	*

Notes – see page 52-55, and 95

T9b	Gable - Maximum Span (in) for Roof Slope 7° - 20° & Roof Area 3											H=15
Landscape		Wind Speed (mph)										
Exposure	Snow Load (psf)	100	105	110	115	120	130	140	150	160	170	180
B	0	96	96	93	88	84	77	71	66	61	58	54
	5	96	96	93	88	84	77	71	66	61	58	54
	10	94	94	93	88	84	77	71	66	61	58	54
	15	84	84	84	84	84	77	71	66	61	58	54
	20	77	77	77	77	77	77	71	66	61	58	54
	25	73	73	73	73	73	73	71	66	61	58	54
	30	68	68	68	68	68	68	68	66	61	58	54
	35	63	63	63	63	63	63	63	63	61	58	54
	40	59	59	59	59	59	59	59	59	59	58	54
	45	56	56	56	56	56	56	56	56	56	56	54
	50	53	53	53	53	53	53	53	53	53	53	53
	55	51	51	51	51	51	51	51	51	51	51	51
	60	49	49	49	49	49	49	49	49	49	49	49
	70	45	45	45	45	45	45	45	45	45	45	45
	80	43	43	43	43	43	43	43	43	43	43	43
	90	40	40	40	40	40	40	40	40	40	40	40
	100	38	38	38	38	38	38	38	38	38	38	38
	110	36	36	36	36	36	36	36	36	36	36	36
	120	35	35	35	35	35	35	35	35	35	35	35
C	0	83	79	74	71	68	62	58	54	*	*	*
	5	83	79	74	71	68	62	58	54	*	*	*
	10	83	79	74	71	68	62	58	54	*	*	*
	15	83	79	74	71	68	62	58	54	*	*	*
	20	77	77	74	71	68	62	58	54	*	*	*
	25	73	73	73	71	68	62	58	54	*	*	*
	30	68	68	68	68	68	62	58	54	*	*	*
	35	63	63	63	63	63	62	58	54	*	*	*
	40	59	59	59	59	59	59	58	54	*	*	*
	45	56	56	56	56	56	56	56	54	*	*	*
	50	53	53	53	53	53	53	53	53	*	*	*
	55	51	51	51	51	51	51	51	51	*	*	*
	60	49	49	49	49	49	49	49	49	*	*	*
	70	45	45	45	45	45	45	45	45	*	*	*
	80	43	43	43	43	43	43	43	43	*	*	*
	90	40	40	40	40	40	40	40	40	*	*	*
	100	38	38	38	38	38	38	38	38	*	*	*
	110	36	36	36	36	36	36	36	36	*	*	*
	120	35	35	35	35	35	35	35	35	*	*	*
D	0	74	70	67	64	61	56	52	*	*	*	*
	5	74	70	67	64	61	56	52	*	*	*	*
	10	74	70	67	64	61	56	52	*	*	*	*
	15	74	70	67	64	61	56	52	*	*	*	*
	20	74	70	67	64	61	56	*	*	*	*	*
	25	73	70	67	64	61	56	*	*	*	*	*
	30	68	68	67	64	61	56	*	*	*	*	*
	35	63	63	63	63	61	56	*	*	*	*	*
	40	59	59	59	59	59	56	*	*	*	*	*
	45	56	56	56	56	56	56	*	*	*	*	*
	50	53	53	53	53	53	53	*	*	*	*	*
	55	51	51	51	51	51	51	*	*	*	*	*
	60	49	49	49	49	49	49	*	*	*	*	*
	70	45	45	45	45	45	45	*	*	*	*	*
	80	43	43	43	43	43	43	*	*	*	*	*
	90	40	40	40	40	40	40	*	*	*	*	*
	100	38	38	38	38	38	38	*	*	*	*	*
	110	36	36	36	36	36	36	*	*	*	*	*
	120	35	35	35	35	35	35	*	*	*	*	*

Notes – see page 52-55, and 95

T9c	Gable - Maximum Span (in) for Roof Slope 20° - 27° & Roof Area 3											H=15
Landscape		Wind Speed (mph)										
Exposure	Snow Load (psf)	100	105	110	115	120	130	140	150	160	170	180
B	0	96	96	96	96	94	86	79	73	68	63	59
	5	96	96	96	96	94	86	79	73	68	63	59
	10	95	95	95	95	94	86	79	73	68	63	59
	15	87	87	87	87	87	86	79	73	68	63	59
	20	81	81	81	81	81	81	79	73	68	63	59
	25	75	75	75	75	75	75	75	73	68	63	59
	30	70	70	70	70	70	70	70	70	68	63	59
	35	66	66	66	66	66	66	66	66	66	63	59
	40	62	62	62	62	62	62	62	62	62	62	59
	45	59	59	59	59	59	59	59	59	59	59	59
	50	56	56	56	56	56	56	56	56	56	56	56
	55	53	53	53	53	53	53	53	53	53	53	53
	60	51	51	51	51	51	51	51	51	51	51	51
	70	48	48	48	48	48	48	48	48	48	48	48
	80	45	45	45	45	45	45	45	45	45	45	45
	90	42	42	42	42	42	42	42	42	42	42	42
	100	40	40	40	40	40	40	40	40	40	40	40
	110	38	38	38	38	38	38	38	38	38	38	38
	120	36	36	36	36	36	36	36	36	36	36	36
C	0	93	88	83	79	75	69	63	58	54	50	*
	5	93	88	83	79	75	69	63	58	54	50	*
	10	93	88	83	79	75	69	63	58	54	50	*
	15	87	87	83	79	75	69	63	58	54	50	*
	20	81	81	81	79	75	69	63	58	54	*	*
	25	75	75	75	75	75	69	63	58	54	*	*
	30	70	70	70	70	70	69	63	58	54	*	*
	35	66	66	66	66	66	66	63	58	54	*	*
	40	62	62	62	62	62	62	62	58	54	*	*
	45	59	59	59	59	59	59	59	58	54	*	*
	50	56	56	56	56	56	56	56	56	54	*	*
	55	53	53	53	53	53	53	53	53	53	*	*
	60	51	51	51	51	51	51	51	51	51	*	*
	70	48	48	48	48	48	48	48	48	48	*	*
	80	45	45	45	45	45	45	45	45	45	*	*
	90	42	42	42	42	42	42	42	42	42	*	*
	100	40	40	40	40	40	40	40	40	40	*	*
	110	38	38	38	38	38	38	38	38	38	*	*
	120	36	36	36	36	36	36	36	36	36	*	*
D	0	83	79	74	71	67	61	56	52	*	*	*
	5	83	79	74	71	67	61	56	52	*	*	*
	10	83	79	74	71	67	61	56	52	*	*	*
	15	83	79	74	71	67	61	56	52	*	*	*
	20	81	79	74	71	67	61	56	52	*	*	*
	25	75	75	74	71	67	61	56	52	*	*	*
	30	70	70	70	70	67	61	56	52	*	*	*
	35	66	66	66	66	66	61	56	52	*	*	*
	40	62	62	62	62	62	61	56	52	*	*	*
	45	59	59	59	59	59	59	56	52	*	*	*
	50	56	56	56	56	56	56	56	52	*	*	*
	55	53	53	53	53	53	53	53	52	*	*	*
	60	51	51	51	51	51	51	51	51	*	*	*
	70	48	48	48	48	48	48	48	48	*	*	*
	80	45	45	45	45	45	45	45	45	*	*	*
	90	42	42	42	42	42	42	42	42	*	*	*
	100	40	40	40	40	40	40	40	40	*	*	*
	110	38	38	38	38	38	38	38	38	*	*	*
	120	36	36	36	36	36	36	36	36	*	*	*

Notes – see page 52-55, and 95

T9d	Gable - Maximum Span (in) for Roof Slope 27° - 45° & Roof Area 3											H=15
Landscape		Wind Speed (mph)										
Exposure	Snow Load (psf)	100	105	110	115	120	130	140	150	160	170	180
B	0	96	96	96	96	96	91	84	78	73	68	64
	5	96	96	96	96	96	91	84	78	73	68	64
	10	96	96	96	96	96	91	84	78	73	68	64
	15	89	89	89	89	89	89	84	78	73	68	64
	20	82	82	82	82	82	82	82	78	73	68	64
	25	77	77	77	77	77	77	77	77	73	68	64
	30	73	73	73	73	73	73	73	73	72	68	64
	35	68	68	68	68	68	68	68	68	68	67	64
	40	65	65	65	65	65	65	65	65	65	65	64
	45	61	61	61	61	61	61	61	61	61	61	61
	50	58	58	58	58	58	58	58	58	58	58	58
	55	56	56	56	56	56	56	56	56	56	56	56
	60	54	54	54	54	54	54	54	54	54	54	54
	70	50	50	50	50	50	50	50	50	50	50	50
	80	47	47	47	47	47	47	47	47	47	47	47
	90	44	44	44	44	44	44	44	44	44	44	44
	100	42	42	42	42	42	42	42	42	42	42	42
	110	40	40	40	40	40	40	40	40	40	40	40
	120	38	38	38	38	38	38	38	38	38	38	38
C	0	96	92	88	84	80	74	68	63	59	55	52
	5	96	92	88	84	80	74	68	63	59	55	52
	10	96	92	88	84	80	74	68	63	59	55	52
	15	89	89	88	84	80	74	68	63	59	55	52
	20	82	82	82	82	80	74	68	63	59	55	52
	25	77	77	77	77	77	74	68	63	59	55	52
	30	73	73	73	73	73	72	68	63	59	55	52
	35	68	68	68	68	68	68	67	63	59	55	52
	40	65	65	65	65	65	65	65	63	59	55	52
	45	61	61	61	61	61	61	61	61	59	55	52
	50	58	58	58	58	58	58	58	58	58	55	52
	55	56	56	56	56	56	56	56	56	56	55	52
	60	54	54	54	54	54	54	54	54	54	54	52
	70	50	50	50	50	50	50	50	50	50	50	50
	80	47	47	47	47	47	47	47	47	47	47	47
	90	44	44	44	44	44	44	44	44	44	44	44
	100	42	42	42	42	42	42	42	42	42	42	42
	110	40	40	40	40	40	40	40	40	40	40	40
	120	38	38	38	38	38	38	38	38	38	38	38
D	0	88	83	80	76	73	67	61	57	53	50	*
	5	88	83	80	76	73	67	61	57	53	50	*
	10	88	83	80	76	73	67	61	57	53	50	*
	15	88	83	80	76	73	67	61	57	53	50	*
	20	82	82	80	76	73	67	61	57	53	50	*
	25	77	77	77	76	73	67	61	57	53	50	*
	30	73	73	73	73	72	67	61	57	53	*	*
	35	68	68	68	68	68	67	61	57	53	*	*
	40	65	65	65	65	65	64	61	57	53	*	*
	45	61	61	61	61	61	61	61	57	53	*	*
	50	58	58	58	58	58	58	58	57	53	*	*
	55	56	56	56	56	56	56	56	56	53	*	*
	60	54	54	54	54	54	54	54	54	53	*	*
	70	50	50	50	50	50	50	50	50	50	*	*
	80	47	47	47	47	47	47	47	47	47	*	*
	90	44	44	44	44	44	44	44	44	44	*	*
	100	42	42	42	42	42	42	42	42	42	*	*
	110	40	40	40	40	40	40	40	40	40	*	*
	120	38	38	38	38	38	38	38	38	38	*	*

Notes – see page 52-55, and 95

T10a	Gable - Maximum Span (in) for Roof Slope 0° - 7° & Roof Area 3											H=30
Landscape		Wind Speed (mph)										
Exposure	Snow Load (psf)	100	105	110	115	120	130	140	150	160	170	180
B	0	96	95	90	85	81	74	68	64	59	56	53
	5	96	95	90	85	81	74	68	64	59	56	53
	10	96	95	90	85	81	74	68	64	59	56	53
	15	88	88	88	85	81	74	68	64	59	56	53
	20	81	81	81	81	81	74	68	64	59	56	53
	25	79	79	79	79	79	74	68	64	59	56	53
	30	75	75	75	75	75	74	68	64	59	56	53
	35	70	70	70	70	70	70	68	64	59	56	53
	40	65	65	65	65	65	65	65	64	59	56	53
	45	62	62	62	62	62	62	62	62	59	56	53
	50	59	59	59	59	59	59	59	59	59	56	53
	55	56	56	56	56	56	56	56	56	56	56	53
	60	54	54	54	54	54	54	54	54	54	54	53
	70	50	50	50	50	50	50	50	50	50	50	50
	80	47	47	47	47	47	47	47	47	47	47	47
	90	44	44	44	44	44	44	44	44	44	44	44
	100	42	42	42	42	42	42	42	42	42	42	42
	110	40	40	40	40	40	40	40	40	40	40	40
	120	38	38	38	38	38	38	38	38	38	38	38
C	0	83	78	74	71	67	62	57	53	50	*	*
	5	83	78	74	71	67	62	57	53	50	*	*
	10	83	78	74	71	67	62	57	53	50	*	*
	15	83	78	74	71	67	62	57	53	50	*	*
	20	81	78	74	71	67	62	57	53	50	*	*
	25	79	78	74	71	67	62	57	53	50	*	*
	30	75	75	74	71	67	62	57	53	50	*	*
	35	70	70	70	70	67	62	57	53	50	*	*
	40	65	65	65	65	65	62	57	53	50	*	*
	45	62	62	62	62	62	62	57	53	50	*	*
	50	59	59	59	59	59	59	57	53	50	*	*
	55	56	56	56	56	56	56	56	53	50	*	*
	60	54	54	54	54	54	54	54	53	50	*	*
	70	50	50	50	50	50	50	50	50	50	*	*
	80	47	47	47	47	47	47	47	47	47	*	*
	90	44	44	44	44	44	44	44	44	44	*	*
	100	42	42	42	42	42	42	42	42	42	*	*
	110	40	40	40	40	40	40	40	40	40	*	*
	120	38	38	38	38	38	38	38	38	38	*	*
D	0	75	71	67	64	62	57	53	49	*	*	*
	5	75	71	67	64	62	57	53	49	*	*	*
	10	75	71	67	64	62	57	53	49	*	*	*
	15	75	71	67	64	62	57	53	49	*	*	*
	20	75	71	67	64	62	57	53	*	*	*	*
	25	75	71	67	64	62	57	53	*	*	*	*
	30	75	71	67	64	62	57	53	*	*	*	*
	35	70	70	67	64	62	57	53	*	*	*	*
	40	65	65	65	64	62	57	53	*	*	*	*
	45	62	62	62	62	62	57	53	*	*	*	*
	50	59	59	59	59	59	57	53	*	*	*	*
	55	56	56	56	56	56	56	53	*	*	*	*
	60	54	54	54	54	54	54	53	*	*	*	*
	70	50	50	50	50	50	50	50	*	*	*	*
	80	47	47	47	47	47	47	47	*	*	*	*
	90	44	44	44	44	44	44	44	*	*	*	*
	100	42	42	42	42	42	42	42	*	*	*	*
	110	40	40	40	40	40	40	40	*	*	*	*
	120	38	38	38	38	38	38	38	*	*	*	*

Notes – see page 52-55, and 95

T10b	Gable - Maximum Span (in) for Roof Slope 7° - 20° & Roof Area 3											H=30
Landscape		Wind Speed (mph)										
Exposure	Snow Load (psf)	100	105	110	115	120	130	140	150	160	170	180
B	0	93	88	83	79	75	69	64	59	56	52	*
	5	93	88	83	79	75	69	64	59	56	52	*
	10	93	88	83	79	75	69	64	59	56	52	*
	15	84	84	83	79	75	69	64	59	56	52	*
	20	77	77	77	77	75	69	64	59	56	*	*
	25	73	73	73	73	73	69	64	59	56	*	*
	30	68	68	68	68	68	68	64	59	56	*	*
	35	63	63	63	63	63	63	63	59	56	*	*
	40	59	59	59	59	59	59	59	59	56	*	*
	45	56	56	56	56	56	56	56	56	56	*	*
	50	53	53	53	53	53	53	53	53	53	*	*
	55	51	51	51	51	51	51	51	51	51	*	*
	60	49	49	49	49	49	49	49	49	49	*	*
	70	45	45	45	45	45	45	45	45	45	*	*
	80	43	43	43	43	43	43	43	43	43	*	*
	90	40	40	40	40	40	40	40	40	40	*	*
	100	38	38	38	38	38	38	38	38	38	*	*
	110	36	36	36	36	36	36	36	36	36	*	*
	120	35	35	35	35	35	35	35	35	35	*	*
C	0	76	72	69	65	63	58	54	*	*	*	*
	5	76	72	69	65	63	58	54	*	*	*	*
	10	76	72	69	65	63	58	54	*	*	*	*
	15	76	72	69	65	63	58	54	*	*	*	*
	20	76	72	69	65	63	58	54	*	*	*	*
	25	73	72	69	65	63	58	54	*	*	*	*
	30	68	68	68	65	63	58	54	*	*	*	*
	35	63	63	63	63	63	58	54	*	*	*	*
	40	59	59	59	59	59	58	54	*	*	*	*
	45	56	56	56	56	56	56	54	*	*	*	*
	50	53	53	53	53	53	53	53	*	*	*	*
	55	51	51	51	51	51	51	51	*	*	*	*
	60	49	49	49	49	49	49	49	*	*	*	*
	70	45	45	45	45	45	45	45	*	*	*	*
	80	43	43	43	43	43	43	43	*	*	*	*
	90	40	40	40	40	40	40	40	*	*	*	*
	100	38	38	38	38	38	38	38	*	*	*	*
	110	36	36	36	36	36	36	36	*	*	*	*
	120	35	35	35	35	35	35	35	*	*	*	*
D	0	69	66	63	60	58	53	*	*	*	*	*
	5	69	66	63	60	58	53	*	*	*	*	*
	10	69	66	63	60	58	53	*	*	*	*	*
	15	69	66	63	60	58	53	*	*	*	*	*
	20	69	66	63	60	58	53	*	*	*	*	*
	25	69	66	63	60	58	53	*	*	*	*	*
	30	68	66	63	60	58	*	*	*	*	*	*
	35	63	63	63	60	58	*	*	*	*	*	*
	40	59	59	59	59	58	*	*	*	*	*	*
	45	56	56	56	56	56	*	*	*	*	*	*
	50	53	53	53	53	53	*	*	*	*	*	*
	55	51	51	51	51	51	*	*	*	*	*	*
	60	49	49	49	49	49	*	*	*	*	*	*
	70	45	45	45	45	45	*	*	*	*	*	*
	80	43	43	43	43	43	*	*	*	*	*	*
	90	40	40	40	40	40	*	*	*	*	*	*
	100	38	38	38	38	38	*	*	*	*	*	*
	110	36	36	36	36	36	*	*	*	*	*	*
	120	35	35	35	35	35	*	*	*	*	*	*

Notes – see page 52-55, and 95

T10c	Gable - Maximum Span (in) for Roof Slope 20° - 27° & Roof Area 3											H=30
Landscape		Wind Speed (mph)										
Exposure	Snow Load (psf)	100	105	110	115	120	130	140	150	160	170	180
B	0	96	96	93	88	84	77	70	65	60	56	53
	5	96	96	93	88	84	77	70	65	60	56	53
	10	95	95	93	88	84	77	70	65	60	56	53
	15	87	87	87	87	84	77	70	65	60	56	53
	20	81	81	81	81	81	77	70	65	60	56	53
	25	75	75	75	75	75	75	70	65	60	56	53
	30	70	70	70	70	70	70	70	65	60	56	53
	35	66	66	66	66	66	66	66	65	60	56	53
	40	62	62	62	62	62	62	62	62	60	56	53
	45	59	59	59	59	59	59	59	59	59	56	53
	50	56	56	56	56	56	56	56	56	56	56	53
	55	53	53	53	53	53	53	53	53	53	53	53
	60	51	51	51	51	51	51	51	51	51	51	51
	70	48	48	48	48	48	48	48	48	48	48	48
	80	45	45	45	45	45	45	45	45	45	45	45
	90	42	42	42	42	42	42	42	42	42	42	42
	100	40	40	40	40	40	40	40	40	40	40	40
	110	38	38	38	38	38	38	38	38	38	38	38
	120	36	36	36	36	36	36	36	36	36	36	36
C	0	85	81	77	73	69	63	58	54	*	*	*
	5	85	81	77	73	69	63	58	54	*	*	*
	10	85	81	77	73	69	63	58	54	*	*	*
	15	85	81	77	73	69	63	58	54	*	*	*
	20	81	81	77	73	69	63	58	54	*	*	*
	25	75	75	75	73	69	63	58	54	*	*	*
	30	70	70	70	70	69	63	58	54	*	*	*
	35	66	66	66	66	66	63	58	54	*	*	*
	40	62	62	62	62	62	62	58	54	*	*	*
	45	59	59	59	59	59	59	58	54	*	*	*
	50	56	56	56	56	56	56	56	54	*	*	*
	55	53	53	53	53	53	53	53	53	*	*	*
	60	51	51	51	51	51	51	51	51	*	*	*
	70	48	48	48	48	48	48	48	48	*	*	*
	80	45	45	45	45	45	45	45	45	*	*	*
	90	42	42	42	42	42	42	42	42	*	*	*
	100	40	40	40	40	40	40	40	40	*	*	*
	110	38	38	38	38	38	38	38	38	*	*	*
	120	36	36	36	36	36	36	36	36	*	*	*
D	0	78	73	69	66	63	57	53	*	*	*	*
	5	78	73	69	66	63	57	53	*	*	*	*
	10	78	73	69	66	63	57	53	*	*	*	*
	15	78	73	69	66	63	57	53	*	*	*	*
	20	78	73	69	66	63	57	53	*	*	*	*
	25	75	73	69	66	63	57	53	*	*	*	*
	30	70	70	69	66	63	57	53	*	*	*	*
	35	66	66	66	66	63	57	53	*	*	*	*
	40	62	62	62	62	62	57	53	*	*	*	*
	45	59	59	59	59	59	57	53	*	*	*	*
	50	56	56	56	56	56	56	53	*	*	*	*
	55	53	53	53	53	53	53	53	*	*	*	*
	60	51	51	51	51	51	51	51	*	*	*	*
	70	48	48	48	48	48	48	48	*	*	*	*
	80	45	45	45	45	45	45	45	*	*	*	*
	90	42	42	42	42	42	42	42	*	*	*	*
	100	40	40	40	40	40	40	40	*	*	*	*
	110	38	38	38	38	38	38	38	*	*	*	*
	120	36	36	36	36	36	36	36	*	*	*	*

Notes – see page 52-55, and 95

T10d	Gable - Maximum Span (in) for Roof Slope 27° - 45° & Roof Area 3											H=30
Landscape		Wind Speed (mph)										
Exposure	Snow Load (psf)	100	105	110	115	120	130	140	150	160	170	180
B	0	96	96	96	93	89	82	76	70	66	61	58
	5	96	96	96	93	89	82	76	70	66	61	58
	10	96	96	96	93	89	82	76	70	66	61	58
	15	89	89	89	89	89	82	76	70	66	61	58
	20	82	82	82	82	82	82	76	70	66	61	58
	25	77	77	77	77	77	77	76	70	66	61	58
	30	73	73	73	73	73	73	73	70	66	61	58
	35	68	68	68	68	68	68	68	68	66	61	58
	40	65	65	65	65	65	65	65	65	64	61	58
	45	61	61	61	61	61	61	61	61	61	61	58
	50	58	58	58	58	58	58	58	58	58	58	58
	55	56	56	56	56	56	56	56	56	56	56	56
	60	54	54	54	54	54	54	54	54	54	54	54
	70	50	50	50	50	50	50	50	50	50	50	50
	80	47	47	47	47	47	47	47	47	47	47	47
	90	44	44	44	44	44	44	44	44	44	44	44
	100	42	42	42	42	42	42	42	42	42	42	42
	110	40	40	40	40	40	40	40	40	40	40	40
	120	38	38	38	38	38	38	38	38	38	38	38
C	0	90	86	82	78	74	68	63	59	55	51	*
	5	90	86	82	78	74	68	63	59	55	51	*
	10	90	86	82	78	74	68	63	59	55	51	*
	15	89	86	82	78	74	68	63	59	55	51	*
	20	82	82	82	78	74	68	63	59	55	51	*
	25	77	77	77	77	74	68	63	59	55	51	*
	30	73	73	73	73	72	68	63	59	55	51	*
	35	68	68	68	68	68	67	63	59	55	51	*
	40	65	65	65	65	65	65	63	59	55	51	*
	45	61	61	61	61	61	61	61	59	55	51	*
	50	58	58	58	58	58	58	58	58	55	51	*
	55	56	56	56	56	56	56	56	56	55	51	*
	60	54	54	54	54	54	54	54	54	54	51	*
	70	50	50	50	50	50	50	50	50	50	50	*
	80	47	47	47	47	47	47	47	47	47	47	*
	90	44	44	44	44	44	44	44	44	44	44	*
	100	42	42	42	42	42	42	42	42	42	42	*
	110	40	40	40	40	40	40	40	40	40	40	*
	120	38	38	38	38	38	38	38	38	38	38	*
D	0	82	78	75	71	68	62	58	53	50	*	*
	5	82	78	75	71	68	62	58	53	50	*	*
	10	82	78	75	71	68	62	58	53	50	*	*
	15	82	78	75	71	68	62	58	53	50	*	*
	20	82	78	75	71	68	62	58	53	50	*	*
	25	77	77	75	71	68	62	58	53	50	*	*
	30	73	73	72	71	68	62	58	53	*	*	*
	35	68	68	68	68	67	62	58	53	*	*	*
	40	65	65	65	65	65	62	58	53	*	*	*
	45	61	61	61	61	61	61	58	53	*	*	*
	50	58	58	58	58	58	58	58	53	*	*	*
	55	56	56	56	56	56	56	56	53	*	*	*
	60	54	54	54	54	54	54	54	53	*	*	*
	70	50	50	50	50	50	50	50	50	*	*	*
	80	47	47	47	47	47	47	47	47	*	*	*
	90	44	44	44	44	44	44	44	44	*	*	*
	100	42	42	42	42	42	42	42	42	*	*	*
	110	40	40	40	40	40	40	40	40	*	*	*
	120	38	38	38	38	38	38	38	38	*	*	*

Notes – see page 52-55, and 95

T11a	Gable - Maximum Span (in) for Roof Slope 0° - 7° & Roof Area 3											H=15
Portrait	Wind Speed (mph)											
Exposure	Snow Load (psf)	100	105	110	115	120	130	140	150	160	170	180
B	0	96/96	96/96	96/96	96/92	94/87	86/79	79/73	73/67	67/63	63/58	59/55
	5	96/96	96/96	96/96	96/92	94/87	86/79	79/73	73/67	67/63	63/58	59/55
	10	95/87	95/87	95/87	95/87	94/87	86/79	79/73	73/67	67/63	63/58	59/55
	15	86/79	86/79	86/79	86/79	86/79	86/79	79/73	73/67	67/63	63/58	59/*
	20	79/72	79/72	79/72	79/72	79/72	79/72	79/72	73/67	67/63	63/58	59/*
	25	77/71	77/71	77/71	77/71	77/71	77/71	77/71	73/67	67/63	63/58	59/*
	30	72/67	72/67	72/67	72/67	72/67	72/67	72/67	72/67	67/63	63/58	59/*
	35	67/62	67/62	67/62	67/62	67/62	67/62	67/62	67/62	67/62	63/58	59/*
	40	63/58	63/58	63/58	63/58	63/58	63/58	63/58	63/58	63/58	63/58	59/*
	45	60/55	60/55	60/55	60/55	60/55	60/55	60/55	60/55	60/55	60/55	59/*
	50	57/52	57/52	57/52	57/52	57/52	57/52	57/52	57/52	57/52	57/52	57/*
	55	54/50	54/50	54/50	54/50	54/50	54/50	54/50	54/50	54/50	54/50	54/*
	60	52/48	52/48	52/48	52/48	52/48	52/48	52/48	52/48	52/48	52/48	52/*
	70	48/44	48/44	48/44	48/44	48/44	48/44	48/44	48/44	48/44	48/44	*/*
	80	45/42	45/42	45/42	45/42	45/42	45/42	45/42	45/42	45/42	45/42	*/*
	90	43/39	43/39	43/39	43/39	43/39	43/39	43/39	43/39	43/39	43/*	*/*
	100	40/37	40/37	40/37	40/37	40/37	40/37	40/37	40/37	40/37	40/*	*/*
	110	39/35	39/35	39/35	39/35	39/35	39/35	39/35	39/35	39/35	39/*	*/*
	120	37/34	37/34	37/34	37/34	37/34	37/34	37/34	37/34	37/34	37/*	*/*
C	0	93/86	87/81	83/77	79/73	75/70	68/63	63/58	58/*	*/*	*/*	*/*
	5	93/86	87/81	83/77	79/73	75/70	68/63	63/58	58/*	*/*	*/*	*/*
	10	93/86	87/81	83/77	79/73	75/70	68/63	63/58	58/*	*/*	*/*	*/*
	15	86/79	86/79	83/77	79/73	75/70	68/63	63/58	58/*	*/*	*/*	*/*
	20	79/72	79/72	79/72	79/72	75/70	68/63	63/58	58/*	*/*	*/*	*/*
	25	77/71	77/71	77/71	77/71	75/70	68/63	63/58	58/*	*/*	*/*	*/*
	30	72/67	72/67	72/67	72/67	72/67	68/63	63/58	58/*	*/*	*/*	*/*
	35	67/62	67/62	67/62	67/62	67/62	67/62	63/58	58/*	*/*	*/*	*/*
	40	63/58	63/58	63/58	63/58	63/58	63/58	63/58	58/*	*/*	*/*	*/*
	45	60/55	60/55	60/55	60/55	60/55	60/55	60/55	58/*	*/*	*/*	*/*
	50	57/52	57/52	57/52	57/52	57/52	57/52	57/52	*/*	*/*	*/*	*/*
	55	54/50	54/50	54/50	54/50	54/50	54/50	54/50	*/*	*/*	*/*	*/*
	60	52/48	52/48	52/48	52/48	52/48	52/48	52/48	*/*	*/*	*/*	*/*
	70	48/44	48/44	48/44	48/44	48/44	48/44	48/44	*/*	*/*	*/*	*/*
	80	45/42	45/42	45/42	45/42	45/42	45/42	45/42	*/*	*/*	*/*	*/*
	90	43/39	43/39	43/39	43/39	43/39	43/39	43/*	*/*	*/*	*/*	*/*
	100	40/37	40/37	40/37	40/37	40/37	40/37	40/*	*/*	*/*	*/*	*/*
	110	39/35	39/35	39/35	39/35	39/35	39/35	39/*	*/*	*/*	*/*	*/*
	120	37/34	37/34	37/34	37/34	37/34	37/34	37/*	*/*	*/*	*/*	*/*
D	0	83/77	78/73	74/69	71/65	67/62	61/57	56/*	*/*	*/*	*/*	*/*
	5	83/77	78/73	74/69	71/65	67/62	61/57	56/*	*/*	*/*	*/*	*/*
	10	83/77	78/73	74/69	71/65	67/62	61/57	56/*	*/*	*/*	*/*	*/*
	15	83/77	78/73	74/69	71/65	67/62	61/57	56/*	*/*	*/*	*/*	*/*
	20	79/72	78/72	74/69	71/65	67/62	61/57	*/*	*/*	*/*	*/*	*/*
	25	77/71	77/71	74/69	71/65	67/62	61/57	*/*	*/*	*/*	*/*	*/*
	30	72/67	72/67	72/67	71/65	67/62	61/57	*/*	*/*	*/*	*/*	*/*
	35	67/62	67/62	67/62	67/62	67/62	61/57	*/*	*/*	*/*	*/*	*/*
	40	63/58	63/58	63/58	63/58	63/58	61/57	*/*	*/*	*/*	*/*	*/*
	45	60/55	60/55	60/55	60/55	60/55	60/*	*/*	*/*	*/*	*/*	*/*
	50	57/52	57/52	57/52	57/52	57/52	57/*	*/*	*/*	*/*	*/*	*/*
	55	54/50	54/50	54/50	54/50	54/50	54/*	*/*	*/*	*/*	*/*	*/*
	60	52/48	52/48	52/48	52/48	52/48	52/*	*/*	*/*	*/*	*/*	*/*
	70	48/44	48/44	48/44	48/44	48/44	48/*	*/*	*/*	*/*	*/*	*/*
	80	45/42	45/42	45/42	45/42	45/42	45/*	*/*	*/*	*/*	*/*	*/*
	90	43/39	43/39	43/39	43/39	43/39	43/*	*/*	*/*	*/*	*/*	*/*
	100	40/37	40/37	40/37	40/37	40/37	40/*	*/*	*/*	*/*	*/*	*/*
	110	39/35	39/35	39/35	39/35	39/35	39/*	*/*	*/*	*/*	*/*	*/*
	120	37/34	37/34	37/34	37/34	37/34	37/*	*/*	*/*	*/*	*/*	*/*

Notes – see page 52-55, and 95

T11b	Gable - Maximum Span (in) for Roof Slope 7° - 20° & Roof Area 3											H=15
Portrait		Wind Speed (mph)										
Exposure	Snow Load (psf)	100	105	110	115	120	130	140	150	160	170	180
B	0	96/96	96/96	96/91	93/87	88/82	81/75	74/69	68/64	63/59	59/55	55/*
	5	96/94	96/94	96/91	93/87	88/82	81/75	74/69	68/64	63/59	59/55	55/*
	10	90/83	90/83	90/83	90/83	88/82	81/75	74/69	68/64	63/59	59/55	55/*
	15	81/75	81/75	81/75	81/75	81/75	81/75	74/69	68/64	63/59	59/55	55/*
	20	74/68	74/68	74/68	74/68	74/68	74/68	74/68	68/64	63/59	59/55	*/*
	25	69/63	69/63	69/63	69/63	69/63	69/63	69/63	68/63	63/59	59/*	*/*
	30	63/58	63/58	63/58	63/58	63/58	63/58	63/58	63/58	63/58	59/*	*/*
	35	59/54	59/54	59/54	59/54	59/54	59/54	59/54	59/54	59/54	59/*	*/*
	40	55/51	55/51	55/51	55/51	55/51	55/51	55/51	55/51	55/51	55/*	*/*
	45	52/48	52/48	52/48	52/48	52/48	52/48	52/48	52/48	52/48	52/*	*/*
	50	50/46	50/46	50/46	50/46	50/46	50/46	50/46	50/46	50/46	50/*	*/*
	55	48/44	48/44	48/44	48/44	48/44	48/44	48/44	48/44	48/44	48/*	*/*
	60	46/42	46/42	46/42	46/42	46/42	46/42	46/42	46/42	46/42	*/*	*/*
	70	42/39	42/39	42/39	42/39	42/39	42/39	42/39	42/39	42/39	*/*	*/*
	80	40/36	40/36	40/36	40/36	40/36	40/36	40/36	40/36	40/*	*/*	*/*
	90	37/34	37/34	37/34	37/34	37/34	37/34	37/34	37/34	37/*	*/*	*/*
	100	35/32	35/32	35/32	35/32	35/32	35/32	35/32	35/32	35/*	*/*	*/*
	110	34/31	34/31	34/31	34/31	34/31	34/31	34/31	34/31	34/*	*/*	*/*
	120	32/29	32/29	32/29	32/29	32/29	32/29	32/29	32/29	32/*	*/*	*/*
C	0	87/81	82/77	78/73	74/69	71/66	64/60	59/55	54/*	*/*	*/*	*/*
	5	87/81	82/77	78/73	74/69	71/66	64/60	59/55	54/*	*/*	*/*	*/*
	10	87/81	82/77	78/73	74/69	71/66	64/60	59/55	54/*	*/*	*/*	*/*
	15	81/75	81/75	78/73	74/69	71/66	64/60	59/55	*/*	*/*	*/*	*/*
	20	74/68	74/68	74/68	74/68	71/66	64/60	59/55	*/*	*/*	*/*	*/*
	25	69/63	69/63	69/63	69/63	69/63	64/60	59/*	*/*	*/*	*/*	*/*
	30	63/58	63/58	63/58	63/58	63/58	63/58	59/*	*/*	*/*	*/*	*/*
	35	59/54	59/54	59/54	59/54	59/54	59/54	59/*	*/*	*/*	*/*	*/*
	40	55/51	55/51	55/51	55/51	55/51	55/51	55/*	*/*	*/*	*/*	*/*
	45	52/48	52/48	52/48	52/48	52/48	52/48	52/*	*/*	*/*	*/*	*/*
	50	50/46	50/46	50/46	50/46	50/46	50/46	50/*	*/*	*/*	*/*	*/*
	55	48/44	48/44	48/44	48/44	48/44	48/44	48/*	*/*	*/*	*/*	*/*
	60	46/42	46/42	46/42	46/42	46/42	46/42	*/*	*/*	*/*	*/*	*/*
	70	42/39	42/39	42/39	42/39	42/39	42/39	*/*	*/*	*/*	*/*	*/*
	80	40/36	40/36	40/36	40/36	40/36	40/36	*/*	*/*	*/*	*/*	*/*
	90	37/34	37/34	37/34	37/34	37/34	37/34	*/*	*/*	*/*	*/*	*/*
	100	35/32	35/32	35/32	35/32	35/32	35/32	*/*	*/*	*/*	*/*	*/*
	110	34/31	34/31	34/31	34/31	34/31	34/31	*/*	*/*	*/*	*/*	*/*
	120	32/29	32/29	32/29	32/29	32/29	32/29	*/*	*/*	*/*	*/*	*/*
D	0	78/73	74/69	70/65	66/62	63/59	57/53	*/*	*/*	*/*	*/*	*/*
	5	78/73	74/69	70/65	66/62	63/59	57/53	*/*	*/*	*/*	*/*	*/*
	10	78/73	74/69	70/65	66/62	63/59	57/53	*/*	*/*	*/*	*/*	*/*
	15	78/73	74/69	70/65	66/62	63/59	57/53	*/*	*/*	*/*	*/*	*/*
	20	74/68	74/68	70/65	66/62	63/59	57/*	*/*	*/*	*/*	*/*	*/*
	25	69/63	69/63	69/63	66/62	63/59	57/*	*/*	*/*	*/*	*/*	*/*
	30	63/58	63/58	63/58	63/58	63/58	57/*	*/*	*/*	*/*	*/*	*/*
	35	59/54	59/54	59/54	59/54	59/54	57/*	*/*	*/*	*/*	*/*	*/*
	40	55/51	55/51	55/51	55/51	55/51	*/*	*/*	*/*	*/*	*/*	*/*
	45	52/48	52/48	52/48	52/48	52/48	*/*	*/*	*/*	*/*	*/*	*/*
	50	50/46	50/46	50/46	50/46	50/46	*/*	*/*	*/*	*/*	*/*	*/*
	55	48/44	48/44	48/44	48/44	48/44	*/*	*/*	*/*	*/*	*/*	*/*
	60	46/42	46/42	46/42	46/42	46/42	*/*	*/*	*/*	*/*	*/*	*/*
	70	42/39	42/39	42/39	42/39	42/*	*/*	*/*	*/*	*/*	*/*	*/*
	80	40/36	40/36	40/36	40/36	40/*	*/*	*/*	*/*	*/*	*/*	*/*
	90	37/34	37/34	37/34	37/34	37/*	*/*	*/*	*/*	*/*	*/*	*/*
	100	35/32	35/32	35/32	35/32	35/*	*/*	*/*	*/*	*/*	*/*	*/*
	110	34/31	34/31	34/31	34/31	34/*	*/*	*/*	*/*	*/*	*/*	*/*
	120	32/29	32/29	32/29	32/29	32/*	*/*	*/*	*/*	*/*	*/*	*/*

Notes – see page 52-55, and 95

T11c	Gable - Maximum Span (in) for Roof Slope 20° - 27° & Roof Area 3											H=15
Portrait		Wind Speed (mph)										
Exposure	Snow Load (psf)	100	105	110	115	120	130	140	150	160	170	180
B	0	96/96	96/96	96/96	96/96	96/93	91/85	83/78	77/72	71/67	66/62	62/58
	5	96/93	96/93	96/93	96/93	96/93	91/85	83/78	77/72	71/67	66/62	62/58
	10	90/83	90/83	90/83	90/83	90/83	90/83	83/78	77/72	71/67	66/62	62/58
	15	82/75	82/75	82/75	82/75	82/75	82/75	82/75	77/72	71/67	66/62	62/58
	20	75/69	75/69	75/69	75/69	75/69	75/69	75/69	75/69	71/67	66/62	62/58
	25	70/64	70/64	70/64	70/64	70/64	70/64	70/64	70/64	70/64	66/62	62/58
	30	64/59	64/59	64/59	64/59	64/59	64/59	64/59	64/59	64/59	64/59	62/58
	35	60/55	60/55	60/55	60/55	60/55	60/55	60/55	60/55	60/55	60/55	60/55
	40	57/52	57/52	57/52	57/52	57/52	57/52	57/52	57/52	57/52	57/52	57/52
	45	54/49	54/49	54/49	54/49	54/49	54/49	54/49	54/49	54/49	54/49	54/49
	50	51/47	51/47	51/47	51/47	51/47	51/47	51/47	51/47	51/47	51/47	51/47
	55	49/45	49/45	49/45	49/45	49/45	49/45	49/45	49/45	49/45	49/45	49/45
	60	47/43	47/43	47/43	47/43	47/43	47/43	47/43	47/43	47/43	47/43	47/*
	70	43/40	43/40	43/40	43/40	43/40	43/40	43/40	43/40	43/40	43/40	43/*
	80	41/37	41/37	41/37	41/37	41/37	41/37	41/37	41/37	41/37	41/37	41/*
	90	38/35	38/35	38/35	38/35	38/35	38/35	38/35	38/35	38/35	38/35	38/*
	100	36/33	36/33	36/33	36/33	36/33	36/33	36/33	36/33	36/33	36/33	36/*
	110	35/32	35/32	35/32	35/32	35/32	35/32	35/32	35/32	35/32	35/32	35/*
	120	33/30	33/30	33/30	33/30	33/30	33/30	33/30	33/30	33/30	33/30	33/*
C	0	96/92	93/87	88/82	83/78	79/74	72/67	66/62	61/57	57/53	53/*	*/*
	5	96/92	93/87	88/82	83/78	79/74	72/67	66/62	61/57	57/53	53/*	*/*
	10	90/83	90/83	88/82	83/78	79/74	72/67	66/62	61/57	57/53	53/*	*/*
	15	82/75	82/75	82/75	82/75	79/74	72/67	66/62	61/57	57/53	*/*	*/*
	20	75/69	75/69	75/69	75/69	75/69	72/67	66/62	61/57	57/*	*/*	*/*
	25	70/64	70/64	70/64	70/64	70/64	70/64	66/62	61/57	57/*	*/*	*/*
	30	64/59	64/59	64/59	64/59	64/59	64/59	64/59	61/57	57/*	*/*	*/*
	35	60/55	60/55	60/55	60/55	60/55	60/55	60/55	60/55	*/*	*/*	*/*
	40	57/52	57/52	57/52	57/52	57/52	57/52	57/52	57/52	*/*	*/*	*/*
	45	54/49	54/49	54/49	54/49	54/49	54/49	54/49	54/49	*/*	*/*	*/*
	50	51/47	51/47	51/47	51/47	51/47	51/47	51/47	51/*	*/*	*/*	*/*
	55	49/45	49/45	49/45	49/45	49/45	49/45	49/45	49/*	*/*	*/*	*/*
	60	47/43	47/43	47/43	47/43	47/43	47/43	47/43	47/*	*/*	*/*	*/*
	70	43/40	43/40	43/40	43/40	43/40	43/40	43/40	43/*	*/*	*/*	*/*
	80	41/37	41/37	41/37	41/37	41/37	41/37	41/37	41/*	*/*	*/*	*/*
	90	38/35	38/35	38/35	38/35	38/35	38/35	38/35	38/*	*/*	*/*	*/*
	100	36/33	36/33	36/33	36/33	36/33	36/33	36/33	*/*	*/*	*/*	*/*
	110	35/32	35/32	35/32	35/32	35/32	35/32	35/32	*/*	*/*	*/*	*/*
	120	33/30	33/30	33/30	33/30	33/30	33/30	33/30	*/*	*/*	*/*	*/*
D	0	88/82	83/77	79/73	75/70	71/66	65/60	59/55	55/51	*/*	*/*	*/*
	5	88/82	83/77	79/73	75/70	71/66	65/60	59/55	55/51	*/*	*/*	*/*
	10	88/82	83/77	79/73	75/70	71/66	65/60	59/55	55/*	*/*	*/*	*/*
	15	82/75	82/75	79/73	75/70	71/66	65/60	59/55	55/*	*/*	*/*	*/*
	20	75/69	75/69	75/69	75/69	71/66	65/60	59/55	55/*	*/*	*/*	*/*
	25	70/64	70/64	70/64	70/64	70/64	65/60	59/55	*/*	*/*	*/*	*/*
	30	64/59	64/59	64/59	64/59	64/59	64/59	59/*	*/*	*/*	*/*	*/*
	35	60/55	60/55	60/55	60/55	60/55	60/55	59/*	*/*	*/*	*/*	*/*
	40	57/52	57/52	57/52	57/52	57/52	57/52	57/*	*/*	*/*	*/*	*/*
	45	54/49	54/49	54/49	54/49	54/49	54/49	54/*	*/*	*/*	*/*	*/*
	50	51/47	51/47	51/47	51/47	51/47	51/47	51/*	*/*	*/*	*/*	*/*
	55	49/45	49/45	49/45	49/45	49/45	49/45	49/*	*/*	*/*	*/*	*/*
	60	47/43	47/43	47/43	47/43	47/43	47/43	47/*	*/*	*/*	*/*	*/*
	70	43/40	43/40	43/40	43/40	43/40	43/40	*/*	*/*	*/*	*/*	*/*
	80	41/37	41/37	41/37	41/37	41/37	41/37	*/*	*/*	*/*	*/*	*/*
	90	38/35	38/35	38/35	38/35	38/35	38/35	*/*	*/*	*/*	*/*	*/*
	100	36/33	36/33	36/33	36/33	36/33	36/*	*/*	*/*	*/*	*/*	*/*
	110	35/32	35/32	35/32	35/32	35/32	35/*	*/*	*/*	*/*	*/*	*/*
	120	33/30	33/30	33/30	33/30	33/30	33/*	*/*	*/*	*/*	*/*	*/*

Notes – see page 52-55, and 95

T11d	Gable - Maximum Span (in) for Roof Slope 27° - 45° & Roof Area 3											H=15
Portrait		Wind Speed (mph)										
Exposure	Snow Load (psf)	100	105	110	115	120	130	140	150	160	170	180
B	0	96/95	96/95	96/95	96/95	96/93	92/86	86/79	80/74	75/69	70/65	66/61
	5	96/93	96/93	96/93	96/93	96/93	92/86	86/79	80/74	75/69	70/65	66/61
	10	90/83	90/83	90/83	90/83	90/83	90/83	86/79	80/74	75/69	70/65	66/61
	15	83/76	83/76	83/76	83/76	83/76	83/76	83/76	80/74	75/69	70/65	66/61
	20	77/71	77/71	77/71	77/71	77/71	77/71	77/71	77/71	75/69	70/65	66/61
	25	72/66	72/66	72/66	72/66	72/66	72/66	72/66	72/66	71/66	70/65	66/61
	30	67/61	67/61	67/61	67/61	67/61	67/61	67/61	67/61	67/61	66/61	66/60
	35	62/57	62/57	62/57	62/57	62/57	62/57	62/57	62/57	62/57	62/57	62/57
	40	59/54	59/54	59/54	59/54	59/54	59/54	59/54	59/54	59/54	59/54	59/54
	45	56/51	56/51	56/51	56/51	56/51	56/51	56/51	56/51	56/51	56/51	56/51
	50	53/49	53/49	53/49	53/49	53/49	53/49	53/49	53/49	53/49	53/49	53/49
	55	51/47	51/47	51/47	51/47	51/47	51/47	51/47	51/47	51/47	51/47	51/47
	60	49/45	49/45	49/45	49/45	49/45	49/45	49/45	49/45	49/45	49/45	49/45
	70	45/41	45/41	45/41	45/41	45/41	45/41	45/41	45/41	45/41	45/41	45/41
	80	42/39	42/39	42/39	42/39	42/39	42/39	42/39	42/39	42/39	42/39	42/39
	90	40/37	40/37	40/37	40/37	40/37	40/37	40/37	40/37	40/37	40/37	40/37
	100	38/35	38/35	38/35	38/35	38/35	38/35	38/35	38/35	38/35	38/35	38/35
	110	36/33	36/33	36/33	36/33	36/33	36/33	36/33	36/33	36/33	36/33	36/33
	120	34/32	34/32	34/32	34/32	34/32	34/32	34/32	34/32	34/32	34/32	34/32
C	0	96/92	94/87	90/83	86/80	82/76	76/70	70/65	65/60	61/56	57/53	*/*
	5	96/92	94/87	90/83	86/80	82/76	76/70	70/65	65/60	61/56	57/53	*/*
	10	90/83	90/83	90/83	86/80	82/76	76/70	70/65	65/60	61/56	57/53	*/*
	15	83/76	83/76	83/76	83/76	82/76	76/70	70/65	65/60	61/56	57/*	*/*
	20	77/71	77/71	77/71	77/71	77/71	76/70	70/65	65/60	61/56	57/*	*/*
	25	72/66	72/66	72/66	72/66	72/66	72/66	70/65	65/60	61/56	57/*	*/*
	30	67/61	67/61	67/61	67/61	67/61	67/61	66/61	65/60	61/56	57/*	*/*
	35	62/57	62/57	62/57	62/57	62/57	62/57	62/57	62/57	61/56	57/*	*/*
	40	59/54	59/54	59/54	59/54	59/54	59/54	59/54	59/54	58/54	57/*	*/*
	45	56/51	56/51	56/51	56/51	56/51	56/51	56/51	56/51	56/51	55/*	*/*
	50	53/49	53/49	53/49	53/49	53/49	53/49	53/49	53/49	53/49	*/*	*/*
	55	51/47	51/47	51/47	51/47	51/47	51/47	51/47	51/47	51/47	*/*	*/*
	60	49/45	49/45	49/45	49/45	49/45	49/45	49/45	49/45	49/45	*/*	*/*
	70	45/41	45/41	45/41	45/41	45/41	45/41	45/41	45/41	45/*	*/*	*/*
	80	42/39	42/39	42/39	42/39	42/39	42/39	42/39	42/39	42/*	*/*	*/*
	90	40/37	40/37	40/37	40/37	40/37	40/37	40/37	40/37	40/*	*/*	*/*
	100	38/35	38/35	38/35	38/35	38/35	38/35	38/35	38/35	38/*	*/*	*/*
	110	36/33	36/33	36/33	36/33	36/33	36/33	36/33	36/33	36/*	*/*	*/*
	120	34/32	34/32	34/32	34/32	34/32	34/32	34/32	34/32	34/*	*/*	*/*
D	0	90/83	85/79	81/75	78/72	74/69	68/63	63/58	58/54	54/*	*/*	*/*
	5	90/83	85/79	81/75	78/72	74/69	68/63	63/58	58/54	54/*	*/*	*/*
	10	90/83	85/79	81/75	78/72	74/69	68/63	63/58	58/54	54/*	*/*	*/*
	15	83/76	83/76	81/75	78/72	74/69	68/63	63/58	58/54	54/*	*/*	*/*
	20	77/71	77/71	77/71	77/71	74/69	68/63	63/58	58/54	*/*	*/*	*/*
	25	72/66	72/66	72/66	72/66	71/66	68/63	63/58	58/54	*/*	*/*	*/*
	30	67/61	67/61	67/61	67/61	67/61	66/61	63/58	58/*	*/*	*/*	*/*
	35	62/57	62/57	62/57	62/57	62/57	62/57	62/57	58/*	*/*	*/*	*/*
	40	59/54	59/54	59/54	59/54	59/54	59/54	59/54	58/*	*/*	*/*	*/*
	45	56/51	56/51	56/51	56/51	56/51	56/51	56/51	56/*	*/*	*/*	*/*
	50	53/49	53/49	53/49	53/49	53/49	53/49	53/49	53/*	*/*	*/*	*/*
	55	51/47	51/47	51/47	51/47	51/47	51/47	51/47	51/*	*/*	*/*	*/*
	60	49/45	49/45	49/45	49/45	49/45	49/45	49/45	49/*	*/*	*/*	*/*
	70	45/41	45/41	45/41	45/41	45/41	45/41	45/41	45/*	*/*	*/*	*/*
	80	42/39	42/39	42/39	42/39	42/39	42/39	42/39	42/*	*/*	*/*	*/*
	90	40/37	40/37	40/37	40/37	40/37	40/37	40/37	40/*	*/*	*/*	*/*
	100	38/35	38/35	38/35	38/35	38/35	38/35	38/35	*/*	*/*	*/*	*/*
	110	36/33	36/33	36/33	36/33	36/33	36/33	36/33	*/*	*/*	*/*	*/*
	120	34/32	34/32	34/32	34/32	34/32	34/32	34/32	*/*	*/*	*/*	*/*

Notes – see page 52-55, and 95

T12a	Gable - Maximum Span (in) for Roof Slope 0° - 7° & Roof Area 3											H=30
Portrait		Wind Speed (mph)										
Exposure	Snow Load (psf)	100	105	110	115	120	130	140	150	160	170	180
B	0	96/96	96/91	93/86	88/82	84/78	76/71	70/65	65/60	60/56	56/*	*/*
	5	96/96	96/91	93/86	88/82	84/78	76/71	70/65	65/60	60/56	56/*	*/*
	10	95/87	95/87	93/86	88/82	84/78	76/71	70/65	65/60	60/56	56/*	*/*
	15	86/79	86/79	86/79	86/79	84/78	76/71	70/65	65/60	60/56	56/*	*/*
	20	79/72	79/72	79/72	79/72	79/72	76/71	70/65	65/60	60/56	*/*	*/*
	25	77/71	77/71	77/71	77/71	77/71	76/71	70/65	65/60	60/56	*/*	*/*
	30	72/67	72/67	72/67	72/67	72/67	72/67	70/65	65/60	60/*	*/*	*/*
	35	67/62	67/62	67/62	67/62	67/62	67/62	67/62	65/60	60/*	*/*	*/*
	40	63/58	63/58	63/58	63/58	63/58	63/58	63/58	63/58	60/*	*/*	*/*
	45	60/55	60/55	60/55	60/55	60/55	60/55	60/55	60/55	60/*	*/*	*/*
	50	57/52	57/52	57/52	57/52	57/52	57/52	57/52	57/52	57/*	*/*	*/*
	55	54/50	54/50	54/50	54/50	54/50	54/50	54/50	54/50	54/*	*/*	*/*
	60	52/48	52/48	52/48	52/48	52/48	52/48	52/48	52/48	52/*	*/*	*/*
	70	48/44	48/44	48/44	48/44	48/44	48/44	48/44	48/44	48/*	*/*	*/*
	80	45/42	45/42	45/42	45/42	45/42	45/42	45/42	45/42	45/*	*/*	*/*
	90	43/39	43/39	43/39	43/39	43/39	43/39	43/39	43/39	43/*	*/*	*/*
	100	40/37	40/37	40/37	40/37	40/37	40/37	40/37	40/37	40/*	*/*	*/*
	110	39/35	39/35	39/35	39/35	39/35	39/35	39/35	39/35	39/*	*/*	*/*
	120	37/34	37/34	37/34	37/34	37/34	37/34	37/34	37/34	37/*	*/*	*/*
C	0	85/79	80/75	76/71	72/67	69/64	63/58	58/*	*/*	*/*	*/*	*/*
	5	85/79	80/75	76/71	72/67	69/64	63/58	58/*	*/*	*/*	*/*	*/*
	10	85/79	80/75	76/71	72/67	69/64	63/58	58/*	*/*	*/*	*/*	*/*
	15	85/79	80/75	76/71	72/67	69/64	63/58	58/*	*/*	*/*	*/*	*/*
	20	79/72	79/72	76/71	72/67	69/64	63/58	58/*	*/*	*/*	*/*	*/*
	25	77/71	77/71	76/71	72/67	69/64	63/58	58/*	*/*	*/*	*/*	*/*
	30	72/67	72/67	72/67	72/67	69/64	63/58	58/*	*/*	*/*	*/*	*/*
	35	67/62	67/62	67/62	67/62	67/62	63/58	58/*	*/*	*/*	*/*	*/*
	40	63/58	63/58	63/58	63/58	63/58	63/58	58/*	*/*	*/*	*/*	*/*
	45	60/55	60/55	60/55	60/55	60/55	60/55	*/*	*/*	*/*	*/*	*/*
	50	57/52	57/52	57/52	57/52	57/52	57/52	*/*	*/*	*/*	*/*	*/*
	55	54/50	54/50	54/50	54/50	54/50	54/50	*/*	*/*	*/*	*/*	*/*
	60	52/48	52/48	52/48	52/48	52/48	52/48	*/*	*/*	*/*	*/*	*/*
	70	48/44	48/44	48/44	48/44	48/44	48/44	*/*	*/*	*/*	*/*	*/*
	80	45/42	45/42	45/42	45/42	45/42	45/42	*/*	*/*	*/*	*/*	*/*
	90	43/39	43/39	43/39	43/39	43/39	43/*	*/*	*/*	*/*	*/*	*/*
	100	40/37	40/37	40/37	40/37	40/37	40/*	*/*	*/*	*/*	*/*	*/*
	110	39/35	39/35	39/35	39/35	39/35	39/*	*/*	*/*	*/*	*/*	*/*
	120	37/34	37/34	37/34	37/34	37/34	37/*	*/*	*/*	*/*	*/*	*/*
D	0	77/72	73/68	69/64	66/61	63/58	57/*	*/*	*/*	*/*	*/*	*/*
	5	77/72	73/68	69/64	66/61	63/58	57/*	*/*	*/*	*/*	*/*	*/*
	10	77/72	73/68	69/64	66/61	63/58	57/*	*/*	*/*	*/*	*/*	*/*
	15	77/72	73/68	69/64	66/61	63/58	57/*	*/*	*/*	*/*	*/*	*/*
	20	77/72	73/68	69/64	66/61	63/58	57/*	*/*	*/*	*/*	*/*	*/*
	25	77/71	73/68	69/64	66/61	63/58	57/*	*/*	*/*	*/*	*/*	*/*
	30	72/67	72/67	69/64	66/61	63/58	57/*	*/*	*/*	*/*	*/*	*/*
	35	67/62	67/62	67/62	66/61	63/58	*/*	*/*	*/*	*/*	*/*	*/*
	40	63/58	63/58	63/58	63/58	63/58	*/*	*/*	*/*	*/*	*/*	*/*
	45	60/55	60/55	60/55	60/55	60/55	*/*	*/*	*/*	*/*	*/*	*/*
	50	57/52	57/52	57/52	57/52	57/52	*/*	*/*	*/*	*/*	*/*	*/*
	55	54/50	54/50	54/50	54/50	54/50	*/*	*/*	*/*	*/*	*/*	*/*
	60	52/48	52/48	52/48	52/48	52/48	*/*	*/*	*/*	*/*	*/*	*/*
	70	48/44	48/44	48/44	48/44	48/44	*/*	*/*	*/*	*/*	*/*	*/*
	80	45/42	45/42	45/42	45/42	45/*	*/*	*/*	*/*	*/*	*/*	*/*
	90	43/39	43/39	43/39	43/39	43/*	*/*	*/*	*/*	*/*	*/*	*/*
	100	40/37	40/37	40/37	40/37	40/*	*/*	*/*	*/*	*/*	*/*	*/*
	110	39/35	39/35	39/35	39/35	39/*	*/*	*/*	*/*	*/*	*/*	*/*
	120	37/34	37/34	37/34	37/34	37/*	*/*	*/*	*/*	*/*	*/*	*/*

Notes – see page 52-55, and 95

T12b	Gable - Maximum Span (in) for Roof Slope 7° - 20° & Roof Area 3											H=30
Portrait		Wind Speed (mph)										
Exposure	Snow Load (psf)	100	105	110	115	120	130	140	150	160	170	180
B	0	96/91	92/86	87/81	83/77	79/73	72/67	66/61	61/57	56/52	*/*	*/*
	5	96/91	92/86	87/81	83/77	79/73	72/67	66/61	61/57	56/52	*/*	*/*
	10	90/83	90/83	87/81	83/77	79/73	72/67	66/61	61/57	56/52	*/*	*/*
	15	81/75	81/75	81/75	81/75	79/73	72/67	66/61	61/57	56/*	*/*	*/*
	20	74/68	74/68	74/68	74/68	74/68	72/67	66/61	61/57	56/*	*/*	*/*
	25	69/63	69/63	69/63	69/63	69/63	69/63	66/61	61/57	56/*	*/*	*/*
	30	63/58	63/58	63/58	63/58	63/58	63/58	63/58	61/57	*/*	*/*	*/*
	35	59/54	59/54	59/54	59/54	59/54	59/54	59/54	59/54	*/*	*/*	*/*
	40	55/51	55/51	55/51	55/51	55/51	55/51	55/51	55/*	*/*	*/*	*/*
	45	52/48	52/48	52/48	52/48	52/48	52/48	52/48	52/*	*/*	*/*	*/*
	50	50/46	50/46	50/46	50/46	50/46	50/46	50/46	50/*	*/*	*/*	*/*
	55	48/44	48/44	48/44	48/44	48/44	48/44	48/44	48/*	*/*	*/*	*/*
	60	46/42	46/42	46/42	46/42	46/42	46/42	46/42	46/*	*/*	*/*	*/*
	70	42/39	42/39	42/39	42/39	42/39	42/39	42/39	42/*	*/*	*/*	*/*
	80	40/36	40/36	40/36	40/36	40/36	40/36	40/36	40/*	*/*	*/*	*/*
	90	37/34	37/34	37/34	37/34	37/34	37/34	37/34	37/*	*/*	*/*	*/*
	100	35/32	35/32	35/32	35/32	35/32	35/32	35/32	35/*	*/*	*/*	*/*
	110	34/31	34/31	34/31	34/31	34/31	34/31	34/31	34/*	*/*	*/*	*/*
	120	32/29	32/29	32/29	32/29	32/29	32/29	32/29	32/*	*/*	*/*	*/*
C	0	80/75	76/70	72/67	68/63	65/60	59/55	54/*	*/*	*/*	*/*	*/*
	5	80/75	76/70	72/67	68/63	65/60	59/55	54/*	*/*	*/*	*/*	*/*
	10	80/75	76/70	72/67	68/63	65/60	59/55	54/*	*/*	*/*	*/*	*/*
	15	80/75	76/70	72/67	68/63	65/60	59/55	*/*	*/*	*/*	*/*	*/*
	20	74/68	74/68	72/67	68/63	65/60	59/55	*/*	*/*	*/*	*/*	*/*
	25	69/63	69/63	69/63	68/63	65/60	59/*	*/*	*/*	*/*	*/*	*/*
	30	63/58	63/58	63/58	63/58	63/58	59/*	*/*	*/*	*/*	*/*	*/*
	35	59/54	59/54	59/54	59/54	59/54	59/*	*/*	*/*	*/*	*/*	*/*
	40	55/51	55/51	55/51	55/51	55/51	55/*	*/*	*/*	*/*	*/*	*/*
	45	52/48	52/48	52/48	52/48	52/48	52/*	*/*	*/*	*/*	*/*	*/*
	50	50/46	50/46	50/46	50/46	50/46	50/*	*/*	*/*	*/*	*/*	*/*
	55	48/44	48/44	48/44	48/44	48/44	48/*	*/*	*/*	*/*	*/*	*/*
	60	46/42	46/42	46/42	46/42	46/42	*/*	*/*	*/*	*/*	*/*	*/*
	70	42/39	42/39	42/39	42/39	42/39	*/*	*/*	*/*	*/*	*/*	*/*
	80	40/36	40/36	40/36	40/36	40/36	*/*	*/*	*/*	*/*	*/*	*/*
	90	37/34	37/34	37/34	37/34	37/34	*/*	*/*	*/*	*/*	*/*	*/*
	100	35/32	35/32	35/32	35/32	35/32	*/*	*/*	*/*	*/*	*/*	*/*
	110	34/31	34/31	34/31	34/31	34/31	*/*	*/*	*/*	*/*	*/*	*/*
	120	32/29	32/29	32/29	32/29	32/29	*/*	*/*	*/*	*/*	*/*	*/*
D	0	73/68	69/64	65/61	62/57	59/55	54/*	*/*	*/*	*/*	*/*	*/*
	5	73/68	69/64	65/61	62/57	59/55	54/*	*/*	*/*	*/*	*/*	*/*
	10	73/68	69/64	65/61	62/57	59/55	54/*	*/*	*/*	*/*	*/*	*/*
	15	73/68	69/64	65/61	62/57	59/55	*/*	*/*	*/*	*/*	*/*	*/*
	20	73/68	69/64	65/61	62/57	59/55	*/*	*/*	*/*	*/*	*/*	*/*
	25	69/63	69/63	65/61	62/57	59/*	*/*	*/*	*/*	*/*	*/*	*/*
	30	63/58	63/58	63/58	62/57	59/*	*/*	*/*	*/*	*/*	*/*	*/*
	35	59/54	59/54	59/54	59/54	59/*	*/*	*/*	*/*	*/*	*/*	*/*
	40	55/51	55/51	55/51	55/51	55/*	*/*	*/*	*/*	*/*	*/*	*/*
	45	52/48	52/48	52/48	52/48	52/*	*/*	*/*	*/*	*/*	*/*	*/*
	50	50/46	50/46	50/46	50/*	50/*	*/*	*/*	*/*	*/*	*/*	*/*
	55	48/44	48/44	48/44	48/*	*/*	*/*	*/*	*/*	*/*	*/*	*/*
	60	46/42	46/42	46/42	46/*	*/*	*/*	*/*	*/*	*/*	*/*	*/*
	70	42/39	42/39	42/39	42/*	*/*	*/*	*/*	*/*	*/*	*/*	*/*
	80	40/36	40/36	40/36	40/*	*/*	*/*	*/*	*/*	*/*	*/*	*/*
	90	37/34	37/34	37/34	37/*	*/*	*/*	*/*	*/*	*/*	*/*	*/*
	100	35/32	35/32	35/32	35/*	*/*	*/*	*/*	*/*	*/*	*/*	*/*
	110	34/31	34/31	34/31	34/*	*/*	*/*	*/*	*/*	*/*	*/*	*/*
	120	32/29	32/29	32/29	32/*	*/*	*/*	*/*	*/*	*/*	*/*	*/*

Notes – see page 52-55, and 95

T12c	Gable - Maximum Span (in) for Roof Slope 20° - 27° & Roof Area 3											H=30
Portrait		Wind Speed (mph)										
Exposure	Snow Load (psf)	100	105	110	115	120	130	140	150	160	170	180
B	0	96/96	96/96	96/92	93/87	89/83	81/75	74/69	69/64	64/59	59/55	55/51
	5	96/93	96/93	96/92	93/87	89/83	81/75	74/69	69/64	64/59	59/55	55/51
	10	90/83	90/83	90/83	90/83	89/83	81/75	74/69	69/64	64/59	59/55	55/51
	15	82/75	82/75	82/75	82/75	82/75	81/75	74/69	69/64	64/59	59/55	55/*
	20	75/69	75/69	75/69	75/69	75/69	75/69	74/69	69/64	64/59	59/55	55/*
	25	70/64	70/64	70/64	70/64	70/64	70/64	70/64	69/64	64/59	59/55	*/*
	30	64/59	64/59	64/59	64/59	64/59	64/59	64/59	64/59	64/59	59/*	*/*
	35	60/55	60/55	60/55	60/55	60/55	60/55	60/55	60/55	60/55	59/*	*/*
	40	57/52	57/52	57/52	57/52	57/52	57/52	57/52	57/52	57/52	57/*	*/*
	45	54/49	54/49	54/49	54/49	54/49	54/49	54/49	54/49	54/49	54/*	*/*
	50	51/47	51/47	51/47	51/47	51/47	51/47	51/47	51/47	51/47	51/*	*/*
	55	49/45	49/45	49/45	49/45	49/45	49/45	49/45	49/45	49/45	49/*	*/*
	60	47/43	47/43	47/43	47/43	47/43	47/43	47/43	47/43	47/43	47/*	*/*
	70	43/40	43/40	43/40	43/40	43/40	43/40	43/40	43/40	43/40	*/*	*/*
	80	41/37	41/37	41/37	41/37	41/37	41/37	41/37	41/37	41/*	*/*	*/*
	90	38/35	38/35	38/35	38/35	38/35	38/35	38/35	38/35	38/*	*/*	*/*
	100	36/33	36/33	36/33	36/33	36/33	36/33	36/33	36/33	36/*	*/*	*/*
	110	35/32	35/32	35/32	35/32	35/32	35/32	35/32	35/32	35/*	*/*	*/*
	120	33/30	33/30	33/30	33/30	33/30	33/30	33/30	33/30	33/*	*/*	*/*
C	0	90/84	85/80	81/75	77/72	73/68	66/62	61/57	56/52	*/*	*/*	*/*
	5	90/84	85/80	81/75	77/72	73/68	66/62	61/57	56/52	*/*	*/*	*/*
	10	90/83	85/80	81/75	77/72	73/68	66/62	61/57	56/52	*/*	*/*	*/*
	15	82/75	82/75	81/75	77/72	73/68	66/62	61/57	56/*	*/*	*/*	*/*
	20	75/69	75/69	75/69	75/69	73/68	66/62	61/57	56/*	*/*	*/*	*/*
	25	70/64	70/64	70/64	70/64	70/64	66/62	61/57	56/*	*/*	*/*	*/*
	30	64/59	64/59	64/59	64/59	64/59	64/59	61/57	*/*	*/*	*/*	*/*
	35	60/55	60/55	60/55	60/55	60/55	60/55	60/55	*/*	*/*	*/*	*/*
	40	57/52	57/52	57/52	57/52	57/52	57/52	57/52	*/*	*/*	*/*	*/*
	45	54/49	54/49	54/49	54/49	54/49	54/49	54/*	*/*	*/*	*/*	*/*
	50	51/47	51/47	51/47	51/47	51/47	51/47	51/*	*/*	*/*	*/*	*/*
	55	49/45	49/45	49/45	49/45	49/45	49/45	49/*	*/*	*/*	*/*	*/*
	60	47/43	47/43	47/43	47/43	47/43	47/43	47/*	*/*	*/*	*/*	*/*
	70	43/40	43/40	43/40	43/40	43/40	43/40	43/*	*/*	*/*	*/*	*/*
	80	41/37	41/37	41/37	41/37	41/37	41/37	41/*	*/*	*/*	*/*	*/*
	90	38/35	38/35	38/35	38/35	38/35	38/35	38/*	*/*	*/*	*/*	*/*
	100	36/33	36/33	36/33	36/33	36/33	36/33	*/*	*/*	*/*	*/*	*/*
	110	35/32	35/32	35/32	35/32	35/32	35/32	*/*	*/*	*/*	*/*	*/*
	120	33/30	33/30	33/30	33/30	33/30	33/30	*/*	*/*	*/*	*/*	*/*
D	0	82/76	77/72	73/68	70/65	66/62	60/56	55/51	*/*	*/*	*/*	*/*
	5	82/76	77/72	73/68	70/65	66/62	60/56	55/51	*/*	*/*	*/*	*/*
	10	82/76	77/72	73/68	70/65	66/62	60/56	55/51	*/*	*/*	*/*	*/*
	15	82/75	77/72	73/68	70/65	66/62	60/56	55/*	*/*	*/*	*/*	*/*
	20	75/69	75/69	73/68	70/65	66/62	60/56	55/*	*/*	*/*	*/*	*/*
	25	70/64	70/64	70/64	70/64	66/62	60/56	*/*	*/*	*/*	*/*	*/*
	30	64/59	64/59	64/59	64/59	64/59	60/56	*/*	*/*	*/*	*/*	*/*
	35	60/55	60/55	60/55	60/55	60/55	60/55	*/*	*/*	*/*	*/*	*/*
	40	57/52	57/52	57/52	57/52	57/52	57/*	*/*	*/*	*/*	*/*	*/*
	45	54/49	54/49	54/49	54/49	54/49	54/*	*/*	*/*	*/*	*/*	*/*
	50	51/47	51/47	51/47	51/47	51/47	51/*	*/*	*/*	*/*	*/*	*/*
	55	49/45	49/45	49/45	49/45	49/45	49/*	*/*	*/*	*/*	*/*	*/*
	60	47/43	47/43	47/43	47/43	47/43	47/*	*/*	*/*	*/*	*/*	*/*
	70	43/40	43/40	43/40	43/40	43/40	43/*	*/*	*/*	*/*	*/*	*/*
	80	41/37	41/37	41/37	41/37	41/37	41/*	*/*	*/*	*/*	*/*	*/*
	90	38/35	38/35	38/35	38/35	38/35	*/*	*/*	*/*	*/*	*/*	*/*
	100	36/33	36/33	36/33	36/33	36/33	*/*	*/*	*/*	*/*	*/*	*/*
	110	35/32	35/32	35/32	35/32	35/32	*/*	*/*	*/*	*/*	*/*	*/*
	120	33/30	33/30	33/30	33/30	33/30	*/*	*/*	*/*	*/*	*/*	*/*

Notes – see page 52-55, and 95

T12d	Gable - Maximum Span (in) for Roof Slope 27° - 45° & Roof Area 3											H=30
Portrait		Wind Speed (mph)										
Exposure	Snow Load (psf)	100	105	110	115	120	130	140	150	160	170	180
B	0	96/95	96/95	96/92	94/88	91/84	83/77	77/72	72/67	67/62	63/58	59/55
	5	96/93	96/93	96/92	94/88	91/84	83/77	77/72	72/67	67/62	63/58	59/55
	10	90/83	90/83	90/83	90/83	90/83	83/77	77/72	72/67	67/62	63/58	59/55
	15	83/76	83/76	83/76	83/76	83/76	83/76	77/72	72/67	67/62	63/58	59/55
	20	77/71	77/71	77/71	77/71	77/71	77/71	77/71	72/67	67/62	63/58	59/55
	25	72/66	72/66	72/66	72/66	72/66	72/66	72/66	71/65	67/62	63/58	59/55
	30	67/61	67/61	67/61	67/61	67/61	67/61	67/61	67/61	66/61	63/58	59/55
	35	62/57	62/57	62/57	62/57	62/57	62/57	62/57	62/57	62/57	62/57	59/55
	40	59/54	59/54	59/54	59/54	59/54	59/54	59/54	59/54	59/54	59/54	58/*
	45	56/51	56/51	56/51	56/51	56/51	56/51	56/51	56/51	56/51	56/51	56/*
	50	53/49	53/49	53/49	53/49	53/49	53/49	53/49	53/49	53/49	53/49	53/*
	55	51/47	51/47	51/47	51/47	51/47	51/47	51/47	51/47	51/47	51/47	51/*
	60	49/45	49/45	49/45	49/45	49/45	49/45	49/45	49/45	49/45	49/45	49/*
	70	45/41	45/41	45/41	45/41	45/41	45/41	45/41	45/41	45/41	45/41	45/*
	80	42/39	42/39	42/39	42/39	42/39	42/39	42/39	42/39	42/39	42/39	42/*
	90	40/37	40/37	40/37	40/37	40/37	40/37	40/37	40/37	40/37	40/37	40/*
	100	38/35	38/35	38/35	38/35	38/35	38/35	38/35	38/35	38/35	38/35	38/*
	110	36/33	36/33	36/33	36/33	36/33	36/33	36/33	36/33	36/33	36/33	36/*
	120	34/32	34/32	34/32	34/32	34/32	34/32	34/32	34/32	34/32	34/32	*/*
C	0	92/85	87/81	83/77	80/74	76/71	70/65	65/60	60/56	56/52	*/*	*/*
	5	92/85	87/81	83/77	80/74	76/71	70/65	65/60	60/56	56/52	*/*	*/*
	10	90/83	87/81	83/77	80/74	76/71	70/65	65/60	60/56	56/*	*/*	*/*
	15	83/76	83/76	83/76	80/74	76/71	70/65	65/60	60/56	56/*	*/*	*/*
	20	77/71	77/71	77/71	77/71	76/71	70/65	65/60	60/56	56/*	*/*	*/*
	25	72/66	72/66	72/66	72/66	72/66	70/65	65/60	60/56	56/*	*/*	*/*
	30	67/61	67/61	67/61	67/61	67/61	66/61	65/60	60/56	56/*	*/*	*/*
	35	62/57	62/57	62/57	62/57	62/57	62/57	62/57	60/56	56/*	*/*	*/*
	40	59/54	59/54	59/54	59/54	59/54	59/54	59/54	58/54	*/*	*/*	*/*
	45	56/51	56/51	56/51	56/51	56/51	56/51	56/51	56/51	*/*	*/*	*/*
	50	53/49	53/49	53/49	53/49	53/49	53/49	53/49	53/49	*/*	*/*	*/*
	55	51/47	51/47	51/47	51/47	51/47	51/47	51/47	51/*	*/*	*/*	*/*
	60	49/45	49/45	49/45	49/45	49/45	49/45	49/45	49/*	*/*	*/*	*/*
	70	45/41	45/41	45/41	45/41	45/41	45/41	45/41	45/*	*/*	*/*	*/*
	80	42/39	42/39	42/39	42/39	42/39	42/39	42/39	42/*	*/*	*/*	*/*
	90	40/37	40/37	40/37	40/37	40/37	40/37	40/37	40/*	*/*	*/*	*/*
	100	38/35	38/35	38/35	38/35	38/35	38/35	38/35	38/*	*/*	*/*	*/*
	110	36/33	36/33	36/33	36/33	36/33	36/33	36/33	36/*	*/*	*/*	*/*
	120	34/32	34/32	34/32	34/32	34/32	34/32	34/32	34/*	*/*	*/*	*/*
D	0	84/78	80/74	76/71	73/68	70/65	64/59	59/55	55/*	*/*	*/*	*/*
	5	84/78	80/74	76/71	73/68	70/65	64/59	59/55	55/*	*/*	*/*	*/*
	10	84/78	80/74	76/71	73/68	70/65	64/59	59/55	55/*	*/*	*/*	*/*
	15	83/76	80/74	76/71	73/68	70/65	64/59	59/55	55/*	*/*	*/*	*/*
	20	77/71	77/71	76/71	73/68	70/65	64/59	59/55	55/*	*/*	*/*	*/*
	25	72/66	72/66	72/66	71/66	70/65	64/59	59/55	*/*	*/*	*/*	*/*
	30	67/61	67/61	67/61	67/61	66/61	64/59	59/55	*/*	*/*	*/*	*/*
	35	62/57	62/57	62/57	62/57	62/57	62/57	59/55	*/*	*/*	*/*	*/*
	40	59/54	59/54	59/54	59/54	59/54	59/54	58/*	*/*	*/*	*/*	*/*
	45	56/51	56/51	56/51	56/51	56/51	56/51	56/*	*/*	*/*	*/*	*/*
	50	53/49	53/49	53/49	53/49	53/49	53/49	53/*	*/*	*/*	*/*	*/*
	55	51/47	51/47	51/47	51/47	51/47	51/47	51/*	*/*	*/*	*/*	*/*
	60	49/45	49/45	49/45	49/45	49/45	49/45	49/*	*/*	*/*	*/*	*/*
	70	45/41	45/41	45/41	45/41	45/41	45/41	45/*	*/*	*/*	*/*	*/*
	80	42/39	42/39	42/39	42/39	42/39	42/39	42/*	*/*	*/*	*/*	*/*
	90	40/37	40/37	40/37	40/37	40/37	40/37	40/*	*/*	*/*	*/*	*/*
	100	38/35	38/35	38/35	38/35	38/35	38/35	38/*	*/*	*/*	*/*	*/*
	110	36/33	36/33	36/33	36/33	36/33	36/33	36/*	*/*	*/*	*/*	*/*
	120	34/32	34/32	34/32	34/32	34/32	34/32	*/*	*/*	*/*	*/*	*/*

Notes – see page 52-55, and 95

Gable Roof - Roof Area Conversion

Enclosed Buildings—Gable Roofs, θ ≤ 7°

Roof Area Per Tables	Roof Zone Per ASCE 7-16
1	1', 1
2	2
3	3

Diagrams

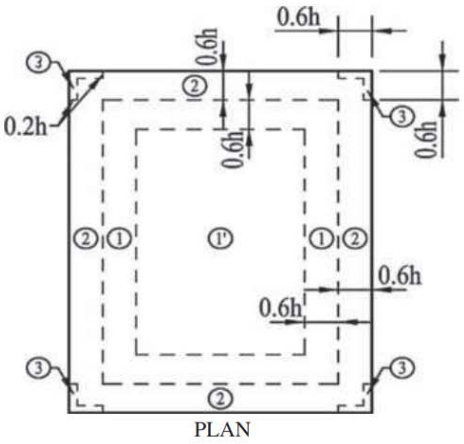

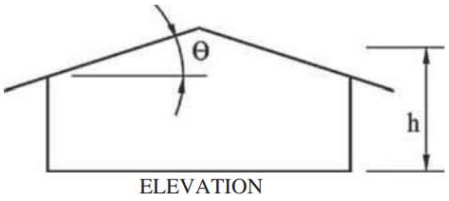

Notation

B = Horizontal dimension of building measured normal to wind direction, in ft (m).
h = Eave height shall be used for θ = 10°.
θ = Angle of plane of roof from horizontal, in degrees.

(ASCE 7-16 Figure 30.3-2A)

Gable Roof - Roof Area Conversion (cont'd)

Enclosed Buildings—Gable Roofs, $7° < \theta \leq 20°$

Roof Area Per Tables	Roof Zone Per ASCE 7-16
1	1, 2e
2	2n, 2r, 3e
3	3r

Diagrams

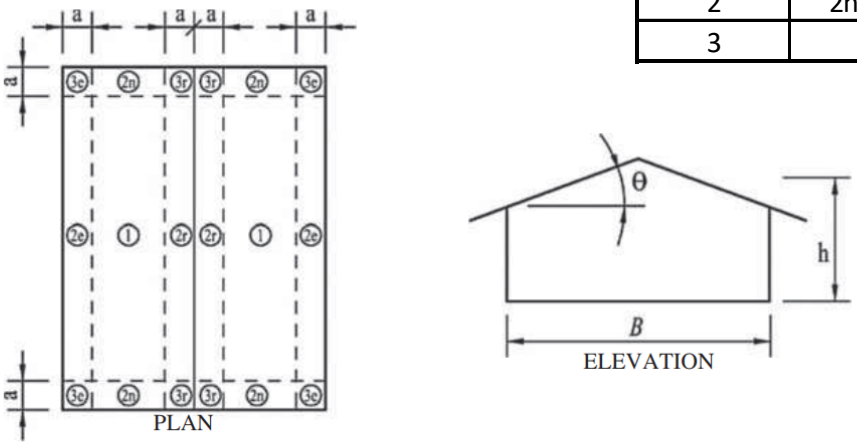

Notation

a = 10% of least horizontal dimension or $0.4h$, whichever is smaller, but not less than either 4% of least horizontal dimension or 3 ft (0.9 m). If an overhang exists, the edge distance shall be measured from the outside edge of the overhang. The horizontal dimensions used to compute the edge distance shall not include any overhang distances.

B = Horizontal dimension of building measured normal to wind direction, in ft (m).

h = Mean roof height, in ft (m), except that eave height shall be used for $\theta \leq 10°$.

θ = Angle of plane of roof from horizontal, in degrees.

(ASCE 7-16 Figure 30.3-2B)

Gable Roof - Roof Area Conversion (cont'd)

Enclosed Buildings—Gable Roofs, 20° < θ ≤ 27°

Roof Area Per Tables	Roof Zone Per ASCE 7-16
1	1, 2e
2	2n, 2r, 3e
3	3r

Diagrams

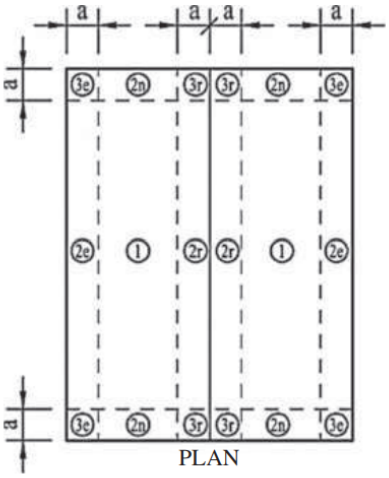

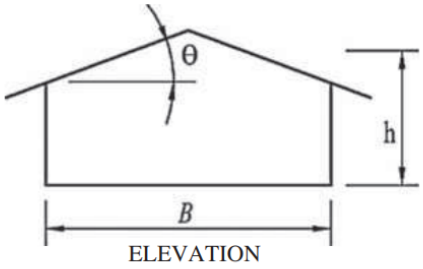

Notation

a = 10% of least horizontal dimension or 0.4h, whichever is smaller, but not less than either 4% of least horizontal dimension or 3 ft (0.9 m). If an overhang exists, the edge distance shall be measured from the outside edge of the overhang. The horizontal dimensions used to compute the edge distance shall not include any overhang distances.

B = Horizontal dimension of building measured normal to wind direction, in ft (m).

h = Mean roof height, in ft (m).

θ = Angle of plane of roof from horizontal, in degrees.

(ASCE 7-16 Figure 30.3-2C)

Gable Roof - Roof Area Conversion (cont'd)

Enclosed Buildings—Gable Roofs, 27° < θ ≤ 45°

Roof Area Per Tables	Roof Zone Per ASCE 7-16
1	1, 2e, 2r
2	2n, 3r
3	3e

Diagrams

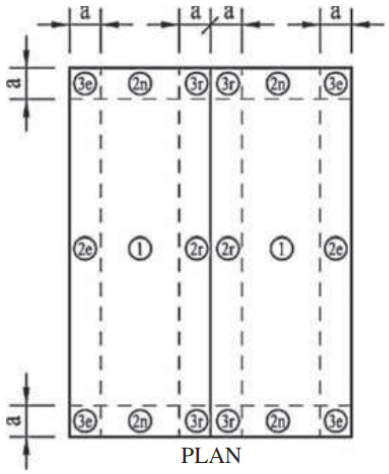

PLAN

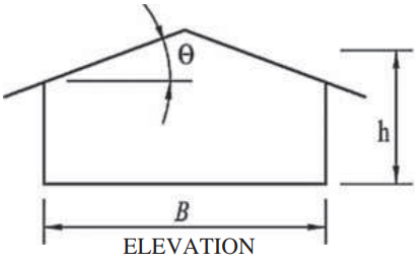

ELEVATION

Notation

a = 10% of least horizontal dimension or 0.4h, whichever is smaller, but not less than either 4% of least horizontal dimension or 3 ft (0.9 m). If an overhang exists, the edge distance shall be measured from the outside edge of the overhang. The horizontal dimensions used to compute the edge distance shall not include any overhang distances.

B = Horizontal dimension of building measured normal to wind direction, in ft (m).

h = Mean roof height, in ft (m).

θ = Angle of plane of roof from horizontal, in degrees.

(ASCE 7-16 Figure 30.3-2D)

T13a	Hip - Maximum Span (in) for Roof Slope 7° - 20° & Roof Area 1											H=15
Landscape		Wind Speed (mph)										
Exposure	Snow Load (psf)	100	105	110	115	120	130	140	150	160	170	180
B	0	96	96	96	96	96	96	96	93	87	82	78
	5	96	96	96	96	96	96	96	93	87	82	78
	10	94	94	94	94	94	94	94	93	87	82	78
	15	84	84	84	84	84	84	84	84	84	82	78
	20	77	77	77	77	77	77	77	77	77	77	76
	25	73	73	73	73	73	73	73	73	73	73	73
	30	68	68	68	68	68	68	68	68	68	68	68
	35	63	63	63	63	63	63	63	63	63	63	63
	40	59	59	59	59	59	59	59	59	59	59	59
	45	56	56	56	56	56	56	56	56	56	56	56
	50	53	53	53	53	53	53	53	53	53	53	53
	55	51	51	51	51	51	51	51	51	51	51	51
	60	49	49	49	49	49	49	49	49	49	49	49
	70	45	45	45	45	45	45	45	45	45	45	45
	80	43	43	43	43	43	43	43	43	43	43	43
	90	40	40	40	40	40	40	40	40	40	40	40
	100	38	38	38	38	38	38	38	38	38	38	38
	110	36	36	36	36	36	36	36	36	36	36	36
	120	35	35	35	35	35	35	35	35	35	35	35
C	0	96	96	96	96	96	88	82	77	72	67	64
	5	96	96	96	96	96	88	82	77	72	67	64
	10	94	94	94	94	94	88	82	77	72	67	64
	15	84	84	84	84	84	84	82	77	72	67	64
	20	77	77	77	77	77	77	77	76	72	67	64
	25	73	73	73	73	73	73	73	72	71	67	64
	30	68	68	68	68	68	68	68	68	67	66	64
	35	63	63	63	63	63	63	63	63	63	63	62
	40	59	59	59	59	59	59	59	59	59	59	59
	45	56	56	56	56	56	56	56	56	56	56	56
	50	53	53	53	53	53	53	53	53	53	53	53
	55	51	51	51	51	51	51	51	51	51	51	51
	60	49	49	49	49	49	49	49	49	49	49	49
	70	45	45	45	45	45	45	45	45	45	45	45
	80	43	43	43	43	43	43	43	43	43	43	43
	90	40	40	40	40	40	40	40	40	40	40	40
	100	38	38	38	38	38	38	38	38	38	38	38
	110	36	36	36	36	36	36	36	36	36	36	36
	120	35	35	35	35	35	35	35	35	35	35	35
D	0	96	96	95	91	87	80	74	69	65	61	*
	5	96	96	95	91	87	80	74	69	65	61	*
	10	94	94	94	91	87	80	74	69	65	61	*
	15	84	84	84	84	84	80	74	69	65	61	*
	20	77	77	77	77	77	77	74	69	65	61	*
	25	73	73	73	73	73	73	72	69	65	61	*
	30	68	68	68	68	68	68	68	66	65	61	*
	35	63	63	63	63	63	63	63	63	62	61	*
	40	59	59	59	59	59	59	59	59	59	58	*
	45	56	56	56	56	56	56	56	56	56	56	*
	50	53	53	53	53	53	53	53	53	53	53	*
	55	51	51	51	51	51	51	51	51	51	51	*
	60	49	49	49	49	49	49	49	49	49	49	*
	70	45	45	45	45	45	45	45	45	45	45	*
	80	43	43	43	43	43	43	43	43	43	43	*
	90	40	40	40	40	40	40	40	40	40	40	*
	100	38	38	38	38	38	38	38	38	38	38	*
	110	36	36	36	36	36	36	36	36	36	36	*
	120	35	35	35	35	35	35	35	35	35	35	*

Notes – see page 92-94, and 95

T13b	Hip - Maximum Span (in) for Roof Slope 20° - 27° & Roof Area 1											H=15
Landscape		Wind Speed (mph)										
Exposure	Snow Load (psf)	100	105	110	115	120	130	140	150	160	170	180
B	0	96	96	96	96	96	96	96	96	96	96	90
	5	96	96	96	96	96	96	96	96	96	96	90
	10	95	95	95	95	95	95	95	95	95	95	90
	15	87	87	87	87	87	87	87	87	87	87	86
	20	81	81	81	81	81	81	81	81	81	81	79
	25	75	75	75	75	75	75	75	75	75	75	74
	30	70	70	70	70	70	70	70	70	70	70	70
	35	66	66	66	66	66	66	66	66	66	66	66
	40	62	62	62	62	62	62	62	62	62	62	62
	45	59	59	59	59	59	59	59	59	59	59	59
	50	56	56	56	56	56	56	56	56	56	56	56
	55	53	53	53	53	53	53	53	53	53	53	53
	60	51	51	51	51	51	51	51	51	51	51	51
	70	48	48	48	48	48	48	48	48	48	48	48
	80	45	45	45	45	45	45	45	45	45	45	45
	90	42	42	42	42	42	42	42	42	42	42	42
	100	40	40	40	40	40	40	40	40	40	40	40
	110	38	38	38	38	38	38	38	38	38	38	38
	120	36	36	36	36	36	36	36	36	36	36	36
C	0	96	96	96	96	96	96	96	89	82	77	72
	5	96	96	96	96	96	96	96	89	82	77	72
	10	95	95	95	95	95	95	95	89	82	77	72
	15	87	87	87	87	87	87	87	85	82	77	72
	20	81	81	81	81	81	81	81	79	78	76	72
	25	75	75	75	75	75	75	75	74	73	71	70
	30	70	70	70	70	70	70	70	70	69	68	66
	35	66	66	66	66	66	66	66	66	65	64	63
	40	62	62	62	62	62	62	62	62	62	62	61
	45	59	59	59	59	59	59	59	59	59	59	58
	50	56	56	56	56	56	56	56	56	56	56	56
	55	53	53	53	53	53	53	53	53	53	53	53
	60	51	51	51	51	51	51	51	51	51	51	51
	70	48	48	48	48	48	48	48	48	48	48	48
	80	45	45	45	45	45	45	45	45	45	45	45
	90	42	42	42	42	42	42	42	42	42	42	42
	100	40	40	40	40	40	40	40	40	40	40	40
	110	38	38	38	38	38	38	38	38	38	38	38
	120	36	36	36	36	36	36	36	36	36	36	36
D	0	96	96	96	96	96	93	86	80	74	69	65
	5	96	96	96	96	96	93	86	80	74	69	65
	10	95	95	95	95	95	93	86	80	74	69	65
	15	87	87	87	87	87	87	85	80	74	69	65
	20	81	81	81	81	81	80	78	77	74	69	65
	25	75	75	75	75	75	75	73	72	71	69	65
	30	70	70	70	70	70	70	69	68	67	66	64
	35	66	66	66	66	66	66	66	65	64	63	62
	40	62	62	62	62	62	62	62	62	61	60	59
	45	59	59	59	59	59	59	59	59	59	58	57
	50	56	56	56	56	56	56	56	56	56	56	55
	55	53	53	53	53	53	53	53	53	53	53	53
	60	51	51	51	51	51	51	51	51	51	51	51
	70	48	48	48	48	48	48	48	48	48	48	48
	80	45	45	45	45	45	45	45	45	45	45	45
	90	42	42	42	42	42	42	42	42	42	42	42
	100	40	40	40	40	40	40	40	40	40	40	40
	110	38	38	38	38	38	38	38	38	38	38	38
	120	36	36	36	36	36	36	36	36	36	36	36

Notes – see page 92-94, and 95

T13c	Hip - Maximum Span (in) for Roof Slope 27° - 45° & Roof Area 1											H=15
Landscape		Wind Speed (mph)										
Exposure	Snow Load (psf)	100	105	110	115	120	130	140	150	160	170	180
B	0	96	96	96	96	96	96	96	96	95	89	84
	5	96	96	96	96	96	96	96	96	95	89	84
	10	96	96	96	96	96	96	96	96	95	89	84
	15	89	89	89	89	89	89	89	89	89	89	84
	20	82	82	82	82	82	82	82	82	82	82	81
	25	77	77	77	77	77	77	77	77	77	77	76
	30	73	73	73	73	73	73	73	73	73	73	72
	35	68	68	68	68	68	68	68	68	68	68	68
	40	65	65	65	65	65	65	65	65	65	65	65
	45	61	61	61	61	61	61	61	61	61	61	61
	50	58	58	58	58	58	58	58	58	58	58	58
	55	56	56	56	56	56	56	56	56	56	56	56
	60	54	54	54	54	54	54	54	54	54	54	54
	70	50	50	50	50	50	50	50	50	50	50	50
	80	47	47	47	47	47	47	47	47	47	47	47
	90	44	44	44	44	44	44	44	44	44	44	44
	100	42	42	42	42	42	42	42	42	42	42	42
	110	40	40	40	40	40	40	40	40	40	40	40
	120	38	38	32	38	38	38	38	38	38	38	38
C	0	96	96	96	96	96	96	89	83	78	73	68
	5	96	96	96	96	96	96	89	83	78	73	68
	10	96	96	96	96	96	96	89	83	78	73	68
	15	89	89	89	89	89	89	89	83	78	73	68
	20	82	82	82	82	82	82	82	81	78	73	68
	25	77	77	77	77	77	77	77	76	75	73	68
	30	73	73	73	73	73	73	73	72	71	69	68
	35	68	68	68	68	68	68	68	68	67	66	65
	40	65	65	65	65	65	65	65	65	64	63	62
	45	61	61	61	61	61	61	61	61	61	61	60
	50	58	58	58	58	58	58	58	58	58	58	58
	55	56	56	56	56	56	56	56	56	56	56	56
	60	54	54	54	54	54	54	54	54	54	54	54
	70	50	50	50	50	50	50	50	50	50	50	50
	80	47	47	47	47	47	47	47	47	47	47	47
	90	44	44	44	44	44	44	44	44	44	44	44
	100	42	42	42	42	42	42	42	42	42	42	42
	110	40	40	40	40	40	40	40	40	40	40	40
	120	38	38	38	38	38	38	38	38	38	38	38
D	0	96	96	96	96	95	87	81	75	70	66	62
	5	96	96	96	96	95	87	81	75	70	66	62
	10	96	96	96	96	95	87	81	75	70	66	62
	15	89	89	89	89	89	87	81	75	70	66	62
	20	82	82	82	82	82	82	80	75	70	66	62
	25	77	77	77	77	77	77	75	74	70	66	62
	30	73	73	73	73	73	73	71	70	69	66	62
	35	68	68	68	68	68	68	68	67	66	64	62
	40	65	65	65	65	65	65	65	64	63	62	61
	45	61	61	61	61	61	61	61	61	60	59	58
	50	58	58	58	58	58	58	58	58	58	57	56
	55	56	56	56	56	56	56	56	56	56	56	55
	60	54	54	54	54	54	54	54	54	54	54	53
	70	50	50	50	50	50	50	50	50	50	50	50
	80	47	47	47	47	47	47	47	47	47	47	47
	90	44	44	44	44	44	44	44	44	44	44	44
	100	42	42	42	42	42	42	42	42	42	42	42
	110	40	40	40	40	40	40	40	40	40	40	40
	120	38	38	38	38	38	38	38	38	38	38	38

Notes – see page 92-94, and 95

T14a	Hip - Maximum Span (in) for Roof Slope 7° - 20° & Roof Area 1											H=30
Landscape		Wind Speed (mph)										
Exposure	Snow Load (psf)	100	105	110	115	120	130	140	150	160	170	180
B	0	96	96	96	96	96	96	90	84	79	74	70
	5	96	96	96	96	96	96	90	84	79	74	70
	10	94	94	94	94	94	94	90	84	79	74	70
	15	84	84	84	84	84	84	84	84	79	74	70
	20	77	77	77	77	77	77	77	77	77	74	70
	25	73	73	73	73	73	73	73	73	73	72	70
	30	68	68	68	68	68	68	68	68	68	67	67
	35	63	63	63	63	63	63	63	63	63	63	63
	40	59	59	59	59	59	59	59	59	59	59	59
	45	56	56	56	56	56	56	56	56	56	56	56
	50	53	53	53	53	53	53	53	53	53	53	53
	55	51	51	51	51	51	51	51	51	51	51	51
	60	49	49	49	49	49	49	49	49	49	49	49
	70	45	45	45	45	45	45	45	45	45	45	45
	80	43	43	43	43	43	43	43	43	43	43	43
	90	40	40	40	40	40	40	40	40	40	40	40
	100	38	38	38	38	38	38	38	38	38	38	38
	110	36	36	36	36	36	36	36	36	36	36	36
	120	35	35	35	35	35	35	35	35	35	35	35
C	0	96	96	96	93	89	82	76	71	67	63	59
	5	96	96	96	93	89	82	76	71	67	63	59
	10	94	94	94	93	89	82	76	71	67	63	59
	15	84	84	84	84	84	82	76	71	67	63	59
	20	77	77	77	77	77	77	76	71	67	63	59
	25	73	73	73	73	73	73	72	71	67	63	59
	30	68	68	68	68	68	68	68	67	66	63	59
	35	63	63	63	63	63	63	63	63	62	61	59
	40	59	59	59	59	59	59	59	59	59	59	58
	45	56	56	56	56	56	56	56	56	56	56	56
	50	53	53	53	53	53	53	53	53	53	53	53
	55	51	51	51	51	51	51	51	51	51	51	51
	60	49	49	49	49	49	49	49	49	49	49	49
	70	45	45	45	45	45	45	45	45	45	45	45
	80	43	43	43	43	43	43	43	43	43	43	43
	90	40	40	40	40	40	40	40	40	40	40	40
	100	38	38	38	38	38	38	38	38	38	38	38
	110	36	36	36	36	36	36	36	36	36	36	36
	120	35	35	35	35	35	35	35	35	35	35	35
D	0	96	94	89	85	82	75	70	65	61	*	*
	5	96	94	89	85	82	75	70	65	61	*	*
	10	94	94	89	85	82	75	70	65	61	*	*
	15	84	84	84	84	82	75	70	65	61	*	*
	20	77	77	77	77	77	75	70	65	61	*	*
	25	73	73	73	73	73	72	70	65	61	*	*
	30	68	68	68	68	68	68	67	65	61	*	*
	35	63	63	63	63	63	63	63	62	61	*	*
	40	59	59	59	59	59	59	59	59	58	*	*
	45	56	56	56	56	56	56	56	56	56	*	*
	50	53	53	53	53	53	53	53	53	53	*	*
	55	51	51	51	51	51	51	51	51	51	*	*
	60	49	49	49	49	49	49	49	49	49	*	*
	70	45	45	45	45	45	45	45	45	45	*	*
	80	43	43	43	43	43	43	43	43	43	*	*
	90	40	40	40	40	40	40	40	40	40	*	*
	100	38	38	38	38	38	38	38	38	38	*	*
	110	36	36	36	36	36	36	36	36	36	*	*
	120	35	35	35	35	35	35	35	35	35	*	*

Notes – see page 92-94, and 95

T14b	Hip - Maximum Span (in) for Roof Slope 20° - 27° & Roof Area 1											H=30
Landscape		Wind Speed (mph)										
Exposure	Snow Load (psf)	100	105	110	115	120	130	140	150	160	170	180
B	0	96	96	96	96	96	96	96	96	92	86	80
	5	96	96	96	96	96	96	96	96	92	86	80
	10	95	95	95	95	95	95	95	95	92	86	80
	15	87	87	87	87	87	87	87	87	86	85	80
	20	81	81	81	81	81	81	81	81	80	78	77
	25	75	75	75	75	75	75	75	75	75	73	72
	30	70	70	70	70	70	70	70	70	70	69	68
	35	66	66	66	66	66	66	66	66	66	66	65
	40	62	62	62	62	62	62	62	62	62	62	62
	45	59	59	59	59	59	59	59	59	59	59	59
	50	56	56	56	56	56	56	56	56	56	56	56
	55	53	53	53	53	53	53	53	53	53	53	53
	60	51	51	51	51	51	51	51	51	51	51	51
	70	48	48	48	48	48	48	48	48	48	48	48
	80	45	45	45	45	45	45	45	45	45	45	45
	90	42	42	42	42	42	42	42	42	42	42	42
	100	40	40	40	40	40	40	40	40	40	40	40
	110	38	38	38	38	38	38	38	38	38	38	38
	120	36	36	36	36	36	36	36	36	36	36	36
C	0	96	96	96	96	96	96	88	82	76	71	67
	5	96	96	96	96	96	96	88	82	76	71	67
	10	95	95	95	95	95	95	88	82	76	71	67
	15	87	87	87	87	87	87	85	82	76	71	67
	20	81	81	81	81	81	81	79	77	76	71	67
	25	75	75	75	75	75	75	74	73	71	70	67
	30	70	70	70	70	70	70	70	69	67	66	65
	35	66	66	66	66	66	66	66	65	64	63	62
	40	62	62	62	62	62	62	62	62	61	60	60
	45	59	59	59	59	59	59	59	59	59	58	57
	50	56	56	56	56	56	56	56	56	56	56	55
	55	53	53	53	53	53	53	53	53	53	53	53
	60	51	51	51	51	51	51	51	51	51	51	51
	70	48	48	48	48	48	48	48	48	48	48	48
	80	45	45	45	45	45	45	45	45	45	45	45
	90	42	42	42	42	42	42	42	42	42	42	42
	100	40	40	40	40	40	40	40	40	40	40	40
	110	38	38	38	38	38	38	38	38	38	38	38
	120	36	36	36	36	36	36	36	36	36	36	36
D	0	96	96	96	96	95	87	80	74	69	65	61
	5	96	96	96	96	95	87	80	74	69	65	61
	10	95	95	95	95	95	87	80	74	69	65	61
	15	87	87	87	87	87	85	80	74	69	65	61
	20	81	81	81	81	81	79	77	74	69	65	61
	25	75	75	75	75	75	74	72	71	69	65	61
	30	70	70	70	70	70	70	68	67	66	64	61
	35	66	66	66	66	66	66	65	64	63	62	60
	40	62	62	62	62	62	62	62	61	60	59	58
	45	59	59	59	59	59	59	59	59	58	57	56
	50	56	56	56	56	56	56	56	56	56	55	54
	55	53	53	53	53	53	53	53	53	53	53	52
	60	51	51	51	51	51	51	51	51	51	51	51
	70	48	48	48	48	48	48	48	48	48	48	48
	80	45	45	45	45	45	45	45	45	45	45	45
	90	42	42	42	42	42	42	42	42	42	42	42
	100	40	40	40	40	40	40	40	40	40	40	40
	110	38	38	38	38	38	38	38	38	38	38	38
	120	36	36	36	36	36	36	36	36	36	36	36

Notes – see page 92-94, and 95

T14c	Hip - Maximum Span (in) for Roof Slope 27° - 45° & Roof Area 1											H=30
Landscape		Wind Speed (mph)										
Exposure	Snow Load (psf)	100	105	110	115	120	130	140	150	160	170	180
B	0	96	96	96	96	96	96	96	92	86	81	76
	5	96	96	96	96	96	96	96	92	86	81	76
	10	96	96	96	96	96	96	96	92	86	81	76
	15	89	89	89	89	89	89	89	89	86	81	76
	20	82	82	82	82	82	82	82	82	82	80	76
	25	77	77	77	77	77	77	77	77	77	75	74
	30	73	73	73	73	73	73	73	73	72	71	70
	35	68	68	68	68	68	68	68	68	68	68	67
	40	65	65	65	65	65	65	65	65	65	65	64
	45	61	61	61	61	61	61	61	61	61	61	61
	50	58	58	58	58	58	58	58	58	58	58	58
	55	56	56	56	56	56	56	56	56	56	56	56
	60	54	54	54	54	54	54	54	54	54	54	54
	70	50	50	50	50	50	50	50	50	50	50	50
	80	47	47	47	47	47	47	47	47	47	47	47
	90	44	44	44	44	44	44	44	44	44	44	44
	100	42	42	42	42	42	42	42	42	42	42	42
	110	40	40	40	40	40	40	40	40	40	40	40
	120	38	38	32	38	38	38	38	38	38	38	38
C	0	96	96	96	96	96	89	83	77	72	67	64
	5	96	96	96	96	96	89	83	77	72	67	64
	10	96	96	96	96	96	89	83	77	72	67	64
	15	89	89	89	89	89	89	83	77	72	67	64
	20	82	82	82	82	82	82	81	77	72	67	64
	25	77	77	77	77	77	77	76	74	72	67	64
	30	73	73	73	73	73	73	72	71	69	67	64
	35	68	68	68	68	68	68	68	67	66	65	64
	40	65	65	65	65	65	65	65	64	63	62	61
	45	61	61	61	61	61	61	61	61	61	60	59
	50	58	58	58	58	58	58	58	58	58	58	57
	55	56	56	56	56	56	56	56	56	56	56	55
	60	54	54	54	54	54	54	54	54	54	54	53
	70	50	50	50	50	50	50	50	50	50	50	50
	80	47	47	47	47	47	47	47	47	47	47	47
	90	44	44	44	44	44	44	44	44	44	44	44
	100	42	42	42	42	42	42	42	42	42	42	42
	110	40	40	40	40	40	40	40	40	40	40	40
	120	38	38	38	38	38	38	38	38	38	38	38
D	0	96	96	96	93	89	82	76	70	66	62	59
	5	96	96	96	93	89	82	76	70	66	62	59
	10	96	96	96	93	89	82	76	70	66	62	59
	15	89	89	89	89	89	82	76	70	66	62	59
	20	82	82	82	82	82	81	76	70	66	62	59
	25	77	77	77	77	77	76	74	70	66	62	59
	30	73	73	73	73	73	72	70	69	66	62	59
	35	68	68	68	68	68	68	67	66	64	62	59
	40	65	65	65	65	65	65	64	63	62	61	59
	45	61	61	61	61	61	61	61	60	59	58	57
	50	58	58	58	58	58	58	58	58	57	56	55
	55	56	56	56	56	56	56	56	56	56	55	54
	60	54	54	54	54	54	54	54	54	54	53	52
	70	50	50	50	50	50	50	50	50	50	50	49
	80	47	47	47	47	47	47	47	47	47	47	47
	90	44	44	44	44	44	44	44	44	44	44	44
	100	42	42	42	42	42	42	42	42	42	42	42
	110	40	40	40	40	40	40	40	40	40	40	40
	120	38	38	38	38	38	38	38	38	38	38	38

Notes – see page 92-94, and 95

T15a	Hip - Maximum Span (in) for Roof Slope 7° - 20° & Roof Area 1											H=15
Portrait		Wind Speed (mph)										
Exposure	Snow Load (psf)	100	105	110	115	120	130	140	150	160	170	180
B	0	96/96	96/96	96/96	96/96	96/96	96/96	96/94	93/87	86/80	81/75	76/70
	5	96/94	96/94	96/94	96/94	96/94	96/94	96/94	93/87	86/80	81/75	76/70
	10	90/83	90/83	90/83	90/83	90/83	90/83	90/83	90/83	86/80	81/75	76/70
	15	81/75	81/75	81/75	81/75	81/75	81/75	81/75	81/75	81/75	81/75	76/70
	20	74/68	74/68	74/68	74/68	74/68	74/68	74/68	74/68	74/68	74/68	74/68
	25	69/63	69/63	69/63	69/63	69/63	69/63	69/63	69/63	69/63	69/63	69/63
	30	63/58	63/58	63/58	63/58	63/58	63/58	63/58	63/58	63/58	63/58	63/58
	35	59/54	59/54	59/54	59/54	59/54	59/54	59/54	59/54	59/54	59/54	59/54
	40	55/51	55/51	55/51	55/51	55/51	55/51	55/51	55/51	55/51	55/51	55/51
	45	52/48	52/48	52/48	52/48	52/48	52/48	52/48	52/48	52/48	52/48	52/48
	50	50/46	50/46	50/46	50/46	50/46	50/46	50/46	50/46	50/46	50/46	50/46
	55	48/44	48/44	48/44	48/44	48/44	48/44	48/44	48/44	48/44	48/44	48/44
	60	46/42	46/42	46/42	46/42	46/42	46/42	46/42	46/42	46/42	46/42	46/42
	70	42/39	42/39	42/39	42/39	42/39	42/39	42/39	42/39	42/39	42/39	42/39
	80	40/36	40/36	40/36	40/36	40/36	40/36	40/36	40/36	40/36	40/36	40/36
	90	37/34	37/34	37/34	37/34	37/34	37/34	37/34	37/34	37/34	37/34	37/34
	100	35/32	35/32	35/32	35/32	35/32	35/32	35/32	35/32	35/32	35/32	35/32
	110	34/31	34/31	34/31	34/31	34/31	34/31	34/31	34/31	34/31	34/31	34/31
	120	32/29	32/29	32/29	32/29	32/29	32/29	32/29	32/29	32/29	32/29	32/29
C	0	96/96	96/96	96/96	96/94	96/90	87/82	81/75	75/69	71/65	66/61	63/58
	5	96/94	96/94	96/94	96/94	96/90	87/82	81/75	75/69	71/65	66/61	63/58
	10	90/83	90/83	90/83	90/83	90/83	87/82	81/75	75/69	71/65	66/61	63/58
	15	81/75	81/75	81/75	81/75	81/75	81/75	81/75	75/69	71/65	66/61	63/58
	20	74/68	74/68	74/68	74/68	74/68	74/68	74/68	74/68	71/65	66/61	63/58
	25	69/63	69/63	69/63	69/63	69/63	69/63	69/63	69/63	68/63	66/61	63/58
	30	63/58	63/58	63/58	63/58	63/58	63/58	63/58	63/58	63/58	63/58	62/58
	35	59/54	59/54	59/54	59/54	59/54	59/54	59/54	59/54	59/54	59/54	59/54
	40	55/51	55/51	55/51	55/51	55/51	55/51	55/51	55/51	55/51	55/51	55/51
	45	52/48	52/48	52/48	52/48	52/48	52/48	52/48	52/48	52/48	52/48	52/48
	50	50/46	50/46	50/46	50/46	50/46	50/46	50/46	50/46	50/46	50/46	50/46
	55	48/44	48/44	48/44	48/44	48/44	48/44	48/44	48/44	48/44	48/44	48/44
	60	46/42	46/42	46/42	46/42	46/42	46/42	46/42	46/42	46/42	46/42	46/42
	70	42/39	42/39	42/39	42/39	42/39	42/39	42/39	42/39	42/39	42/39	42/39
	80	40/36	40/36	40/36	40/36	40/36	40/36	40/36	40/36	40/36	40/36	40/36
	90	37/34	37/34	37/34	37/34	37/34	37/34	37/34	37/34	37/34	37/34	37/34
	100	35/32	35/32	35/32	35/32	35/32	35/32	35/32	35/32	35/32	35/32	35/32
	110	34/31	34/31	34/31	34/31	34/31	34/31	34/31	34/31	34/31	34/31	34/31
	120	32/29	32/29	32/29	32/29	32/29	32/29	32/29	32/29	32/29	32/29	32/29
D	0	96/96	96/93	95/89	90/84	86/80	79/73	73/67	68/63	64/59	60/55	57/*
	5	96/94	96/93	95/89	90/84	86/80	79/73	73/67	68/63	64/59	60/55	57/*
	10	90/83	90/83	90/83	90/83	86/80	79/73	73/67	68/63	64/59	60/55	57/*
	15	81/75	81/75	81/75	81/75	81/75	79/73	73/67	68/63	64/59	60/*	*/*
	20	74/68	74/68	74/68	74/68	74/68	74/68	73/67	68/63	64/59	60/*	*/*
	25	69/63	69/63	69/63	69/63	69/63	69/63	69/63	68/63	64/59	60/*	*/*
	30	63/58	63/58	63/58	63/58	63/58	63/58	63/58	63/58	63/58	60/*	*/*
	35	59/54	59/54	59/54	59/54	59/54	59/54	59/54	59/54	59/54	59/*	*/*
	40	55/51	55/51	55/51	55/51	55/51	55/51	55/51	55/51	55/51	55/*	*/*
	45	52/48	52/48	52/48	52/48	52/48	52/48	52/48	52/48	52/48	52/*	*/*
	50	50/46	50/46	50/46	50/46	50/46	50/46	50/46	50/46	50/46	50/*	*/*
	55	48/44	48/44	48/44	48/44	48/44	48/44	48/44	48/44	48/44	48/*	*/*
	60	46/42	46/42	46/42	46/42	46/42	46/42	46/42	46/42	46/42	46/*	*/*
	70	42/39	42/39	42/39	42/39	42/39	42/39	42/39	42/39	42/39	42/*	*/*
	80	40/36	40/36	40/36	40/36	40/36	40/36	40/36	40/36	40/36	40/*	*/*
	90	37/34	37/34	37/34	37/34	37/34	37/34	37/34	37/34	37/34	37/*	*/*
	100	35/32	35/32	35/32	35/32	35/32	35/32	35/32	35/32	35/32	35/*	*/*
	110	34/31	34/31	34/31	34/31	34/31	34/31	34/31	34/31	34/31	34/*	*/*
	120	32/29	32/29	32/29	32/29	32/29	32/29	32/29	32/29	32/29	32/*	*/*

Notes – see page 92-94, and 95

T15b	Hip - Maximum Span (in) for Roof Slope 20° - 27° & Roof Area 1											H=15
Portrait		Wind Speed (mph)										
Exposure	Snow Load (psf)	100	105	110	115	120	130	140	150	160	170	180
B	0	96/96	96/96	96/96	96/96	96/96	96/96	96/96	96/96	96/96	96/92	93/86
	5	96/93	96/93	96/93	96/93	96/93	96/93	96/93	96/93	96/93	96/92	93/86
	10	90/83	90/83	90/83	90/83	90/83	90/83	90/83	90/83	90/83	90/83	90/83
	15	82/75	82/75	82/75	82/75	82/75	82/75	82/75	82/75	82/75	82/75	82/75
	20	75/69	75/69	75/69	75/69	75/69	75/69	75/69	75/69	75/69	75/69	75/69
	25	70/64	70/64	70/64	70/64	70/64	70/64	70/64	70/64	70/64	70/64	70/64
	30	64/59	64/59	64/59	64/59	64/59	64/59	64/59	64/59	64/59	64/59	64/59
	35	60/55	60/55	60/55	60/55	60/55	60/55	60/55	60/55	60/55	60/55	60/55
	40	57/52	57/52	57/52	57/52	57/52	57/52	57/52	57/52	57/52	57/52	57/52
	45	54/49	54/49	54/49	54/49	54/49	54/49	54/49	54/49	54/49	54/49	54/49
	50	51/47	51/47	51/47	51/47	51/47	51/47	51/47	51/47	51/47	51/47	51/47
	55	49/45	49/45	49/45	49/45	49/45	49/45	49/45	49/45	49/45	49/45	49/45
	60	47/43	47/43	47/43	47/43	47/43	47/43	47/43	47/43	47/43	47/43	47/43
	70	43/40	43/40	43/40	43/40	43/40	43/40	43/40	43/40	43/40	43/40	43/40
	80	41/37	41/37	41/37	41/37	41/37	41/37	41/37	41/37	41/37	41/37	41/37
	90	38/35	38/35	38/35	38/35	38/35	38/35	38/35	38/35	38/35	38/35	38/35
	100	36/33	36/33	36/33	36/33	36/33	36/33	36/33	36/33	36/33	36/33	36/33
	110	35/32	35/32	35/32	35/32	35/32	35/32	35/32	35/32	35/32	35/32	35/32
	120	33/30	33/30	33/30	33/30	33/30	33/30	33/30	33/30	33/30	33/30	33/30
C	0	96/96	96/96	96/96	96/96	96/96	96/96	96/92	92/85	85/79	80/74	75/70
	5	96/93	96/93	96/93	96/93	96/93	96/93	96/92	92/85	85/79	80/74	75/70
	10	90/83	90/83	90/83	90/83	90/83	90/83	90/83	90/83	85/79	80/74	75/70
	15	82/75	82/75	82/75	82/75	82/75	82/75	82/75	82/75	80/74	79/73	75/70
	20	75/69	75/69	75/69	75/69	75/69	75/69	75/69	75/69	74/68	73/67	71/66
	25	70/64	70/64	70/64	70/64	70/64	70/64	70/64	70/64	69/64	68/63	67/62
	30	64/59	64/59	64/59	64/59	64/59	64/59	64/59	64/59	64/59	64/59	63/58
	35	60/55	60/55	60/55	60/55	60/55	60/55	60/55	60/55	60/55	60/55	60/55
	40	57/52	57/52	57/52	57/52	57/52	57/52	57/52	57/52	57/52	57/52	57/52
	45	54/49	54/49	54/49	54/49	54/49	54/49	54/49	54/49	54/49	54/49	54/49
	50	51/47	51/47	51/47	51/47	51/47	51/47	51/47	51/47	51/47	51/47	51/47
	55	49/45	49/45	49/45	49/45	49/45	49/45	49/45	49/45	49/45	49/45	49/45
	60	47/43	47/43	47/43	47/43	47/43	47/43	47/43	47/43	47/43	47/43	47/43
	70	43/40	43/40	43/40	43/40	43/40	43/40	43/40	43/40	43/40	43/40	43/40
	80	41/37	41/37	41/37	41/37	41/37	41/37	41/37	41/37	41/37	41/37	41/37
	90	38/35	38/35	38/35	38/35	38/35	38/35	38/35	38/35	38/35	38/35	38/35
	100	36/33	36/33	36/33	36/33	36/33	36/33	36/33	36/33	36/33	36/33	36/33
	110	35/32	35/32	35/32	35/32	35/32	35/32	35/32	35/32	35/32	35/32	35/32
	120	33/30	33/30	33/30	33/30	33/30	33/30	33/30	33/30	33/30	33/30	33/30
D	0	96/96	96/96	96/96	96/96	96/96	96/90	89/83	82/76	77/71	72/66	67/62
	5	96/93	96/93	96/93	96/93	96/93	96/90	89/83	82/76	77/71	72/66	67/62
	10	90/83	90/83	90/83	90/83	90/83	90/83	89/83	82/76	77/71	72/66	67/62
	15	82/75	82/75	82/75	82/75	82/75	82/75	81/75	79/73	77/71	72/66	67/62
	20	75/69	75/69	75/69	75/69	75/69	75/69	75/69	73/68	72/66	71/65	67/62
	25	70/64	70/64	70/64	70/64	70/64	70/64	70/64	68/63	67/62	66/61	65/60
	30	64/59	64/59	64/59	64/59	64/59	64/59	64/59	64/59	63/59	62/58	61/57
	35	60/55	60/55	60/55	60/55	60/55	60/55	60/55	60/55	60/55	59/55	58/54
	40	57/52	57/52	57/52	57/52	57/52	57/52	57/52	57/52	57/52	57/52	56/51
	45	54/49	54/49	54/49	54/49	54/49	54/49	54/49	54/49	54/49	54/49	54/49
	50	51/47	51/47	51/47	51/47	51/47	51/47	51/47	51/47	51/47	51/47	51/47
	55	49/45	49/45	49/45	49/45	49/45	49/45	49/45	49/45	49/45	49/45	49/45
	60	47/43	47/43	47/43	47/43	47/43	47/43	47/43	47/43	47/43	47/43	47/43
	70	43/40	43/40	43/40	43/40	43/40	43/40	43/40	43/40	43/40	43/40	43/40
	80	41/37	41/37	41/37	41/37	41/37	41/37	41/37	41/37	41/37	41/37	41/37
	90	38/35	38/35	38/35	38/35	38/35	38/35	38/35	38/35	38/35	38/35	38/35
	100	36/33	36/33	36/33	36/33	36/33	36/33	36/33	36/33	36/33	36/33	36/33
	110	35/32	35/32	35/32	35/32	35/32	35/32	35/32	35/32	35/32	35/32	35/32
	120	33/30	33/30	33/30	33/30	33/30	33/30	33/30	33/30	33/30	33/30	33/30

Notes – see page 92-94, and 95

T15c	Hip - Maximum Span (in) for Roof Slope 27° - 45° & Roof Area 1											H=15
Portrait		Wind Speed (mph)										
Exposure	Snow Load (psf)	100	105	110	115	120	130	140	150	160	170	180
B	0	96/95	96/95	96/95	96/95	96/95	96/95	96/95	96/95	96/90	91/85	86/80
	5	96/93	96/93	96/93	96/93	96/93	96/93	96/93	96/93	96/90	91/85	86/80
	10	90/83	90/83	90/83	90/83	90/83	90/83	90/83	90/83	90/83	90/83	86/80
	15	83/76	83/76	83/76	83/76	83/76	83/76	83/76	83/76	83/76	83/76	83/76
	20	77/71	77/71	77/71	77/71	77/71	77/71	77/71	77/71	77/71	77/71	77/71
	25	72/66	72/66	72/66	72/66	72/66	72/66	72/66	72/66	72/66	72/66	72/66
	30	67/61	67/61	67/61	67/61	67/61	67/61	67/61	67/61	67/61	67/61	67/61
	35	62/57	62/57	62/57	62/57	62/57	62/57	62/57	62/57	62/57	62/57	62/57
	40	59/54	59/54	59/54	59/54	59/54	59/54	59/54	59/54	59/54	59/54	59/54
	45	56/51	56/51	56/51	56/51	56/51	56/51	56/51	56/51	56/51	56/51	56/51
	50	53/49	53/49	53/49	53/49	53/49	53/49	53/49	53/49	53/49	53/49	53/49
	55	51/47	51/47	51/47	51/47	51/47	51/47	51/47	51/47	51/47	51/47	51/47
	60	49/45	49/45	49/45	49/45	49/45	49/45	49/45	49/45	49/45	49/45	49/45
	70	45/41	45/41	45/41	45/41	45/41	45/41	45/41	45/41	45/41	45/41	45/41
	80	42/39	42/39	42/39	42/39	42/39	42/39	42/39	42/39	42/39	42/39	42/39
	90	40/37	40/37	40/37	40/37	40/37	40/37	40/37	40/37	40/37	40/37	40/37
	100	38/35	38/35	38/35	38/35	38/35	38/35	38/35	38/35	38/35	38/35	38/35
	110	36/33	36/33	36/33	36/33	36/33	36/33	36/33	36/33	36/33	36/33	36/33
	120	34/32	34/32	34/32	34/32	34/32	34/32	34/32	34/32	34/32	34/32	34/32
C	0	96/95	96/95	96/95	96/95	96/95	96/91	91/84	85/79	79/74	74/69	70/65
	5	96/93	96/93	96/93	96/93	96/93	96/91	91/84	85/79	79/74	74/69	70/65
	10	90/83	90/83	90/83	90/83	90/83	90/83	90/83	85/79	79/74	74/69	70/65
	15	83/76	83/76	83/76	83/76	83/76	83/76	83/76	83/76	79/74	74/69	70/65
	20	77/71	77/71	77/71	77/71	77/71	77/71	77/71	77/71	75/70	74/68	70/65
	25	72/66	72/66	72/66	72/66	72/66	72/66	72/66	72/66	71/65	69/64	68/63
	30	67/61	67/61	67/61	67/61	67/61	67/61	67/61	67/61	67/61	66/61	65/60
	35	62/57	62/57	62/57	62/57	62/57	62/57	62/57	62/57	62/57	62/57	61/57
	40	59/54	59/54	59/54	59/54	59/54	59/54	59/54	59/54	59/54	59/54	59/54
	45	56/51	56/51	56/51	56/51	56/51	56/51	56/51	56/51	56/51	56/51	56/51
	50	53/49	53/49	53/49	53/49	53/49	53/49	53/49	53/49	53/49	53/49	53/49
	55	51/47	51/47	51/47	51/47	51/47	51/47	51/47	51/47	51/47	51/47	51/47
	60	49/45	49/45	49/45	49/45	49/45	49/45	49/45	49/45	49/45	49/45	49/45
	70	45/41	45/41	45/41	45/41	45/41	45/41	45/41	45/41	45/41	45/41	45/41
	80	42/39	42/39	42/39	42/39	42/39	42/39	42/39	42/39	42/39	42/39	42/39
	90	40/37	40/37	40/37	40/37	40/37	40/37	40/37	40/37	40/37	40/37	40/37
	100	38/35	38/35	38/35	38/35	38/35	38/35	38/35	38/35	38/35	38/35	38/35
	110	36/33	36/33	36/33	36/33	36/33	36/33	36/33	36/33	36/33	36/33	36/33
	120	34/32	34/32	34/32	34/32	34/32	34/32	34/32	34/32	34/32	34/32	34/32
D	0	96/95	96/95	96/95	96/93	96/89	89/83	82/77	77/71	72/67	67/62	63/59
	5	96/93	96/93	96/93	96/93	96/89	89/83	82/77	77/71	72/67	67/62	63/59
	10	90/83	90/83	90/83	90/83	90/83	89/83	82/77	77/71	72/67	67/62	63/59
	15	83/76	83/76	83/76	83/76	83/76	83/76	82/76	77/71	72/67	67/62	63/59
	20	77/71	77/71	77/71	77/71	77/71	77/71	76/70	75/69	72/67	67/62	63/59
	25	72/66	72/66	72/66	72/66	72/66	72/66	71/66	70/65	69/63	67/62	63/59
	30	67/61	67/61	67/61	67/61	67/61	67/61	67/61	66/61	65/60	64/59	63/58
	35	62/57	62/57	62/57	62/57	62/57	62/57	62/57	62/57	62/57	61/56	60/55
	40	59/54	59/54	59/54	59/54	59/54	59/54	59/54	59/54	59/54	58/54	57/53
	45	56/51	56/51	56/51	56/51	56/51	56/51	56/51	56/51	56/51	56/51	55/51
	50	53/49	53/49	53/49	53/49	53/49	53/49	53/49	53/49	53/49	53/49	53/49
	55	51/47	51/47	51/47	51/47	51/47	51/47	51/47	51/47	51/47	51/47	51/47
	60	49/45	49/45	49/45	49/45	49/45	49/45	49/45	49/45	49/45	49/45	49/45
	70	45/41	45/41	45/41	45/41	45/41	45/41	45/41	45/41	45/41	45/41	45/41
	80	42/39	42/39	42/39	42/39	42/39	42/39	42/39	42/39	42/39	42/39	42/39
	90	40/37	40/37	40/37	40/37	40/37	40/37	40/37	40/37	40/37	40/37	40/37
	100	38/35	38/35	38/35	38/35	38/35	38/35	38/35	38/35	38/35	38/35	38/35
	110	36/33	36/33	36/33	36/33	36/33	36/33	36/33	36/33	36/33	36/33	36/33
	120	34/32	34/32	34/32	34/32	34/32	34/32	34/32	34/32	34/32	34/32	34/32

Notes – see page 92-94, and 95

T16a	Hip - Maximum Span (in) for Roof Slope 7° - 20° & Roof Area 1											H=30
Portrait		Wind Speed (mph)										
Exposure	Snow Load (psf)	100	105	110	115	120	130	140	150	160	170	180
B	0	96/96	96/96	96/96	96/96	96/96	96/91	90/84	83/77	78/72	73/67	69/63
	5	96/94	96/94	96/94	96/94	96/94	96/91	90/84	83/77	78/72	73/67	69/63
	10	90/83	90/83	90/83	90/83	90/83	90/83	90/83	83/77	78/72	73/67	69/63
	15	81/75	81/75	81/75	81/75	81/75	81/75	81/75	81/75	78/72	73/67	69/63
	20	74/68	74/68	74/68	74/68	74/68	74/68	74/68	74/68	74/68	73/67	69/63
	25	69/63	69/63	69/63	69/63	69/63	69/63	69/63	69/63	69/63	69/63	68/63
	30	63/58	63/58	63/58	63/58	63/58	63/58	63/58	63/58	63/58	63/58	63/58
	35	59/54	59/54	59/54	59/54	59/54	59/54	59/54	59/54	59/54	59/54	59/54
	40	55/51	55/51	55/51	55/51	55/51	55/51	55/51	55/51	55/51	55/51	55/51
	45	52/48	52/48	52/48	52/48	52/48	52/48	52/48	52/48	52/48	52/48	52/48
	50	50/46	50/46	50/46	50/46	50/46	50/46	50/46	50/46	50/46	50/46	50/46
	55	48/44	48/44	48/44	48/44	48/44	48/44	48/44	48/44	48/44	48/44	48/44
	60	46/42	46/42	46/42	46/42	46/42	46/42	46/42	46/42	46/42	46/42	46/42
	70	42/39	42/39	42/39	42/39	42/39	42/39	42/39	42/39	42/39	42/39	42/39
	80	40/36	40/36	40/36	40/36	40/36	40/36	40/36	40/36	40/36	40/36	40/36
	90	37/34	37/34	37/34	37/34	37/34	37/34	37/34	37/34	37/34	37/34	37/34
	100	35/32	35/32	35/32	35/32	35/32	35/32	35/32	35/32	35/32	35/32	35/32
	110	34/31	34/31	34/31	34/31	34/31	34/31	34/31	34/31	34/31	34/31	34/31
	120	32/29	32/29	32/29	32/29	32/29	32/29	32/29	32/29	32/29	32/29	32/29
C	0	96/96	96/96	96/91	93/86	88/82	81/75	75/69	70/64	65/60	62/57	58/*
	5	96/94	96/94	96/91	93/86	88/82	81/75	75/69	70/64	65/60	62/57	58/*
	10	90/83	90/83	90/83	90/83	88/82	81/75	75/69	70/64	65/60	62/57	58/*
	15	81/75	81/75	81/75	81/75	81/75	81/75	75/69	70/64	65/60	62/57	58/*
	20	74/68	74/68	74/68	74/68	74/68	74/68	74/68	70/64	65/60	62/57	58/*
	25	69/63	69/63	69/63	69/63	69/63	69/63	69/63	68/63	65/60	62/57	58/*
	30	63/58	63/58	63/58	63/58	63/58	63/58	63/58	63/58	63/58	62/57	58/*
	35	59/54	59/54	59/54	59/54	59/54	59/54	59/54	59/54	59/54	59/54	58/*
	40	55/51	55/51	55/51	55/51	55/51	55/51	55/51	55/51	55/51	55/51	55/*
	45	52/48	52/48	52/48	52/48	52/48	52/48	52/48	52/48	52/48	52/48	52/*
	50	50/46	50/46	50/46	50/46	50/46	50/46	50/46	50/46	50/46	50/46	50/*
	55	48/44	48/44	48/44	48/44	48/44	48/44	48/44	48/44	48/44	48/44	48/*
	60	46/42	46/42	46/42	46/42	46/42	46/42	46/42	46/42	46/42	46/42	46/*
	70	42/39	42/39	42/39	42/39	42/39	42/39	42/39	42/39	42/39	42/39	42/*
	80	40/36	40/36	40/36	40/36	40/36	40/36	40/36	40/36	40/36	40/36	40/*
	90	37/34	37/34	37/34	37/34	37/34	37/34	37/34	37/34	37/34	37/34	37/*
	100	35/32	35/32	35/32	35/32	35/32	35/32	35/32	35/32	35/32	35/32	35/*
	110	34/31	34/31	34/31	34/31	34/31	34/31	34/31	34/31	34/31	34/31	34/*
	120	32/29	32/29	32/29	32/29	32/29	32/29	32/29	32/29	32/29	32/29	32/*
D	0	96/92	93/87	88/83	84/78	80/74	74/68	69/63	64/59	60/55	56/*	*/*
	5	96/92	93/87	88/83	84/78	80/74	74/68	69/63	64/59	60/55	56/*	*/*
	10	90/83	90/83	88/83	84/78	80/74	74/68	69/63	64/59	60/55	56/*	*/*
	15	81/75	81/75	81/75	81/75	80/74	74/68	69/63	64/59	60/*	*/*	*/*
	20	74/68	74/68	74/68	74/68	74/68	74/68	69/63	64/59	60/*	*/*	*/*
	25	69/63	69/63	69/63	69/63	69/63	69/63	68/63	64/59	60/*	*/*	*/*
	30	63/58	63/58	63/58	63/58	63/58	63/58	63/58	63/58	60/*	*/*	*/*
	35	59/54	59/54	59/54	59/54	59/54	59/54	59/54	59/54	59/*	*/*	*/*
	40	55/51	55/51	55/51	55/51	55/51	55/51	55/51	55/51	55/*	*/*	*/*
	45	52/48	52/48	52/48	52/48	52/48	52/48	52/48	52/48	52/*	*/*	*/*
	50	50/46	50/46	50/46	50/46	50/46	50/46	50/46	50/46	50/*	*/*	*/*
	55	48/44	48/44	48/44	48/44	48/44	48/44	48/44	48/44	48/*	*/*	*/*
	60	46/42	46/42	46/42	46/42	46/42	46/42	46/42	46/42	46/*	*/*	*/*
	70	42/39	42/39	42/39	42/39	42/39	42/39	42/39	42/39	42/*	*/*	*/*
	80	40/36	40/36	40/36	40/36	40/36	40/36	40/36	40/36	40/*	*/*	*/*
	90	37/34	37/34	37/34	37/34	37/34	37/34	37/34	37/34	37/*	*/*	*/*
	100	35/32	35/32	35/32	35/32	35/32	35/32	35/32	35/32	35/*	*/*	*/*
	110	34/31	34/31	34/31	34/31	34/31	34/31	34/31	34/31	34/*	*/*	*/*
	120	32/29	32/29	32/29	32/29	32/29	32/29	32/29	32/29	32/*	*/*	*/*

Notes – see page 92-94, and 95

T16b	Hip - Maximum Span (in) for Roof Slope 20° - 27° & Roof Area 1											H=30
Portrait		Wind Speed (mph)										
Exposure	Snow Load (psf)	100	105	110	115	120	130	140	150	160	170	180
B	0	96/96	96/96	96/96	96/96	96/96	96/96	96/96	96/95	95/88	89/82	83/77
	5	96/93	96/93	96/93	96/93	96/93	96/93	96/93	96/93	95/88	89/82	83/77
	10	90/83	90/83	90/83	90/83	90/83	90/83	90/83	90/83	90/83	89/82	83/77
	15	82/75	82/75	82/75	82/75	82/75	82/75	82/75	82/75	82/75	81/75	80/74
	20	75/69	75/69	75/69	75/69	75/69	75/69	75/69	75/69	75/69	75/69	74/68
	25	70/64	70/64	70/64	70/64	70/64	70/64	70/64	70/64	70/64	70/64	69/63
	30	64/59	64/59	64/59	64/59	64/59	64/59	64/59	64/59	64/59	64/59	64/59
	35	60/55	60/55	60/55	60/55	60/55	60/55	60/55	60/55	60/55	60/55	60/55
	40	57/52	57/52	57/52	57/52	57/52	57/52	57/52	57/52	57/52	57/52	57/52
	45	54/49	54/49	54/49	54/49	54/49	54/49	54/49	54/49	54/49	54/49	54/49
	50	51/47	51/47	51/47	51/47	51/47	51/47	51/47	51/47	51/47	51/47	51/47
	55	49/45	49/45	49/45	49/45	49/45	49/45	49/45	49/45	49/45	49/45	49/45
	60	47/43	47/43	47/43	47/43	47/43	47/43	47/43	47/43	47/43	47/43	47/43
	70	43/40	43/40	43/40	43/40	43/40	43/40	43/40	43/40	43/40	43/40	43/40
	80	41/37	41/37	41/37	41/37	41/37	41/37	41/37	41/37	41/37	41/37	41/37
	90	38/35	38/35	38/35	38/35	38/35	38/35	38/35	38/35	38/35	38/35	38/35
	100	36/33	36/33	36/33	36/33	36/33	36/33	36/33	36/33	36/33	36/33	36/33
	110	35/32	35/32	35/32	35/32	35/32	35/32	35/32	35/32	35/32	35/32	35/32
	120	33/30	33/30	33/30	33/30	33/30	33/30	33/30	33/30	33/30	33/30	33/30
C	0	96/96	96/96	96/96	96/96	96/96	96/92	91/85	84/79	79/73	73/68	69/64
	5	96/93	96/93	96/93	96/93	96/93	96/92	91/85	84/79	79/73	73/68	69/64
	10	90/83	90/83	90/83	90/83	90/83	90/83	90/83	84/79	79/73	73/68	69/64
	15	82/75	82/75	82/75	82/75	82/75	82/75	82/75	80/74	78/72	73/68	69/64
	20	75/69	75/69	75/69	75/69	75/69	75/69	75/69	74/68	72/67	71/66	69/64
	25	70/64	70/64	70/64	70/64	70/64	70/64	70/64	69/64	68/63	67/61	65/60
	30	64/59	64/59	64/59	64/59	64/59	64/59	64/59	64/59	64/59	63/58	62/57
	35	60/55	60/55	60/55	60/55	60/55	60/55	60/55	60/55	60/55	60/55	59/54
	40	57/52	57/52	57/52	57/52	57/52	57/52	57/52	57/52	57/52	57/52	56/52
	45	54/49	54/49	54/49	54/49	54/49	54/49	54/49	54/49	54/49	54/49	54/49
	50	51/47	51/47	51/47	51/47	51/47	51/47	51/47	51/47	51/47	51/47	51/47
	55	49/45	49/45	49/45	49/45	49/45	49/45	49/45	49/45	49/45	49/45	49/45
	60	47/43	47/43	47/43	47/43	47/43	47/43	47/43	47/43	47/43	47/43	47/43
	70	43/40	43/40	43/40	43/40	43/40	43/40	43/40	43/40	43/40	43/40	43/40
	80	41/37	41/37	41/37	41/37	41/37	41/37	41/37	41/37	41/37	41/37	41/37
	90	38/35	38/35	38/35	38/35	38/35	38/35	38/35	38/35	38/35	38/35	38/35
	100	36/33	36/33	36/33	36/33	36/33	36/33	36/33	36/33	36/33	36/33	36/33
	110	35/32	35/32	35/32	35/32	35/32	35/32	35/32	35/32	35/32	35/32	35/32
	120	33/30	33/30	33/30	33/30	33/30	33/30	33/30	33/30	33/30	33/30	33/30
D	0	96/96	96/96	96/96	96/96	96/92	90/84	83/77	77/71	72/67	67/62	63/58
	5	96/93	96/93	96/93	96/93	96/92	90/84	83/77	77/71	72/67	67/62	63/58
	10	90/83	90/83	90/83	90/83	90/83	90/83	83/77	77/71	72/67	67/62	63/58
	15	82/75	82/75	82/75	82/75	82/75	81/75	80/74	77/71	72/67	67/62	63/58
	20	75/69	75/69	75/69	75/69	75/69	75/69	74/68	72/67	71/65	67/62	63/58
	25	70/64	70/64	70/64	70/64	70/64	70/64	69/63	67/62	66/61	65/60	63/58
	30	64/59	64/59	64/59	64/59	64/59	64/59	64/59	64/59	62/58	61/57	60/56
	35	60/55	60/55	60/55	60/55	60/55	60/55	60/55	60/55	59/55	58/54	57/53
	40	57/52	57/52	57/52	57/52	57/52	57/52	57/52	57/52	57/52	56/51	55/51
	45	54/49	54/49	54/49	54/49	54/49	54/49	54/49	54/49	54/49	54/49	53/49
	50	51/47	51/47	51/47	51/47	51/47	51/47	51/47	51/47	51/47	51/47	51/47
	55	49/45	49/45	49/45	49/45	49/45	49/45	49/45	49/45	49/45	49/45	49/45
	60	47/43	47/43	47/43	47/43	47/43	47/43	47/43	47/43	47/43	47/43	47/43
	70	43/40	43/40	43/40	43/40	43/40	43/40	43/40	43/40	43/40	43/40	43/40
	80	41/37	41/37	41/37	41/37	41/37	41/37	41/37	41/37	41/37	41/37	41/*
	90	38/35	38/35	38/35	38/35	38/35	38/35	38/35	38/35	38/35	38/35	38/*
	100	36/33	36/33	36/33	36/33	36/33	36/33	36/33	36/33	36/33	36/33	36/*
	110	35/32	35/32	35/32	35/32	35/32	35/32	35/32	35/32	35/32	35/32	35/*
	120	33/30	33/30	33/30	33/30	33/30	33/30	33/30	33/30	33/30	33/30	33/*

Notes – see page 92-94, and 95

T16c	Hip - Maximum Span (in) for Roof Slope 27° - 45° & Roof Area 1											H=30
Portrait		Wind Speed (mph)										
Exposure	Snow Load (psf)	100	105	110	115	120	130	140	150	160	170	180
B	0	96/95	96/95	96/95	96/95	96/95	96/95	96/93	93/87	88/81	82/76	78/72
	5	96/93	96/93	96/93	96/93	96/93	96/93	96/93	93/87	88/81	82/76	78/72
	10	90/83	90/83	90/83	90/83	90/83	90/83	90/83	90/83	88/81	82/76	78/72
	15	83/76	83/76	83/76	83/76	83/76	83/76	83/76	83/76	83/76	82/76	78/72
	20	77/71	77/71	77/71	77/71	77/71	77/71	77/71	77/71	77/71	76/70	75/69
	25	72/66	72/66	72/66	72/66	72/66	72/66	72/66	72/66	72/66	71/66	70/65
	30	67/61	67/61	67/61	67/61	67/61	67/61	67/61	67/61	67/61	67/61	66/61
	35	62/57	62/57	62/57	62/57	62/57	62/57	62/57	62/57	62/57	62/57	62/57
	40	59/54	59/54	59/54	59/54	59/54	59/54	59/54	59/54	59/54	59/54	59/54
	45	56/51	56/51	56/51	56/51	56/51	56/51	56/51	56/51	56/51	56/51	56/51
	50	53/49	53/49	53/49	53/49	53/49	53/49	53/49	53/49	53/49	53/49	53/49
	55	51/47	51/47	51/47	51/47	51/47	51/47	51/47	51/47	51/47	51/47	51/47
	60	49/45	49/45	49/45	49/45	49/45	49/45	49/45	49/45	49/45	49/45	49/45
	70	45/41	45/41	45/41	45/41	45/41	45/41	45/41	45/41	45/41	45/41	45/41
	80	42/39	42/39	42/39	42/39	42/39	42/39	42/39	42/39	42/39	42/39	42/39
	90	40/37	40/37	40/37	40/37	40/37	40/37	40/37	40/37	40/37	40/37	40/37
	100	38/35	38/35	38/35	38/35	38/35	38/35	38/35	38/35	38/35	38/35	38/35
	110	36/33	36/33	36/33	36/33	36/33	36/33	36/33	36/33	36/33	36/33	36/33
	120	34/32	34/32	34/32	34/32	34/32	34/32	34/32	34/32	34/32	34/32	34/32
C	0	96/95	96/95	96/95	96/95	96/92	91/85	84/78	79/73	74/68	69/64	65/60
	5	96/93	96/93	96/93	96/93	96/92	91/85	84/78	79/73	74/68	69/64	65/60
	10	90/83	90/83	90/83	90/83	90/83	90/83	84/78	79/73	74/68	69/64	65/60
	15	83/76	83/76	83/76	83/76	83/76	83/76	83/76	79/73	74/68	69/64	65/60
	20	77/71	77/71	77/71	77/71	77/71	77/71	77/71	75/69	74/68	69/64	65/60
	25	72/66	72/66	72/66	72/66	72/66	72/66	72/66	70/65	69/64	68/63	65/60
	30	67/61	67/61	67/61	67/61	67/61	67/61	67/61	66/61	65/60	64/59	63/58
	35	62/57	62/57	62/57	62/57	62/57	62/57	62/57	62/57	62/57	61/56	60/56
	40	59/54	59/54	59/54	59/54	59/54	59/54	59/54	59/54	59/54	59/54	58/53
	45	56/51	56/51	56/51	56/51	56/51	56/51	56/51	56/51	56/51	56/51	55/51
	50	53/49	53/49	53/49	53/49	53/49	53/49	53/49	53/49	53/49	53/49	53/49
	55	51/47	51/47	51/47	51/47	51/47	51/47	51/47	51/47	51/47	51/47	51/47
	60	49/45	49/45	49/45	49/45	49/45	49/45	49/45	49/45	49/45	49/45	49/45
	70	45/41	45/41	45/41	45/41	45/41	45/41	45/41	45/41	45/41	45/41	45/41
	80	42/39	42/39	42/39	42/39	42/39	42/39	42/39	42/39	42/39	42/39	42/39
	90	40/37	40/37	40/37	40/37	40/37	40/37	40/37	40/37	40/37	40/37	40/37
	100	38/35	38/35	38/35	38/35	38/35	38/35	38/35	38/35	38/35	38/35	38/35
	110	36/33	36/33	36/33	36/33	36/33	36/33	36/33	36/33	36/33	36/33	36/33
	120	34/32	34/32	34/32	34/32	34/32	34/32	34/32	34/32	34/32	34/32	34/32
D	0	96/95	96/95	96/92	95/88	91/84	84/78	77/72	72/67	67/62	63/58	59/55
	5	96/93	96/93	96/92	95/88	91/84	84/78	77/72	72/67	67/62	63/58	59/55
	10	90/83	90/83	90/83	90/83	90/83	84/78	77/72	72/67	67/62	63/58	59/55
	15	83/76	83/76	83/76	83/76	83/76	83/76	77/72	72/67	67/62	63/58	59/55
	20	77/71	77/71	77/71	77/71	77/71	76/71	75/69	72/67	67/62	63/58	59/55
	25	72/66	72/66	72/66	72/66	72/66	71/66	70/65	69/64	67/62	63/58	59/55
	30	67/61	67/61	67/61	67/61	67/61	67/61	66/61	65/60	64/59	63/58	59/55
	35	62/57	62/57	62/57	62/57	62/57	62/57	62/57	62/57	61/56	60/55	59/54
	40	59/54	59/54	59/54	59/54	59/54	59/54	59/54	59/54	58/54	57/53	56/*
	45	56/51	56/51	56/51	56/51	56/51	56/51	56/51	56/51	56/51	55/51	54/*
	50	53/49	53/49	53/49	53/49	53/49	53/49	53/49	53/49	53/49	53/49	52/*
	55	51/47	51/47	51/47	51/47	51/47	51/47	51/47	51/47	51/47	51/47	51/*
	60	49/45	49/45	49/45	49/45	49/45	49/45	49/45	49/45	49/45	49/45	49/*
	70	45/41	45/41	45/41	45/41	45/41	45/41	45/41	45/41	45/41	45/41	45/*
	80	42/39	42/39	42/39	42/39	42/39	42/39	42/39	42/39	42/39	42/39	42/*
	90	40/37	40/37	40/37	40/37	40/37	40/37	40/37	40/37	40/37	40/37	40/*
	100	38/35	38/35	38/35	38/35	38/35	38/35	38/35	38/35	38/35	38/35	38/*
	110	36/33	36/33	36/33	36/33	36/33	36/33	36/33	36/33	36/33	36/33	36/*
	120	34/32	34/32	34/32	34/32	34/32	34/32	34/32	34/32	34/32	34/32	34/*

Notes – see page 92-94, and 95

T17a	Hip - Maximum Span (in) for Roof Slope 7° - 20° & Roof Area 2											H=15
Landscape		Wind Speed (mph)										
Exposure	Snow Load (psf)	100	105	110	115	120	130	140	150	160	170	180
B	0	96	96	96	96	96	96	88	82	76	71	67
	5	96	96	96	96	96	96	88	82	76	71	67
	10	94	94	94	94	94	94	88	82	76	71	67
	15	84	84	84	84	84	84	84	82	76	71	67
	20	77	77	77	77	77	77	77	77	76	71	67
	25	73	73	73	73	73	73	73	73	73	71	67
	30	68	68	68	68	68	68	68	68	68	68	67
	35	63	63	63	63	63	63	63	63	63	63	63
	40	59	59	59	59	59	59	59	59	59	59	59
	45	56	56	56	56	56	56	56	56	56	56	56
	50	53	53	53	53	53	53	53	53	53	53	53
	55	51	51	51	51	51	51	51	51	51	51	51
	60	49	49	49	49	49	49	49	49	49	49	49
	70	45	45	45	45	45	45	45	45	45	45	45
	80	43	43	43	43	43	43	43	43	43	43	43
	90	40	40	40	40	40	40	40	40	40	40	40
	100	38	38	38	38	38	38	38	38	38	38	38
	110	36	36	36	36	36	36	36	36	36	36	36
	120	35	35	35	35	35	35	35	35	35	35	35
C	0	96	96	93	88	84	77	71	66	62	58	*
	5	96	96	93	88	84	77	71	66	62	58	*
	10	94	94	93	88	84	77	71	66	62	58	*
	15	84	84	84	84	84	77	71	66	62	58	*
	20	77	77	77	77	77	77	71	66	62	58	*
	25	73	73	73	73	73	73	71	66	62	58	*
	30	68	68	68	68	68	68	68	66	62	*	*
	35	63	63	63	63	63	63	63	63	62	*	*
	40	59	59	59	59	59	59	59	59	59	*	*
	45	56	56	56	56	56	56	56	56	56	*	*
	50	53	53	53	53	53	53	53	53	53	*	*
	55	51	51	51	51	51	51	51	51	51	*	*
	60	49	49	49	49	49	49	49	49	49	*	*
	70	45	45	45	45	45	45	45	45	45	*	*
	80	43	43	43	43	43	43	43	43	43	*	*
	90	40	40	40	40	40	40	40	40	40	*	*
	100	38	38	38	38	38	38	38	38	38	*	*
	110	36	36	36	36	36	36	36	36	36	*	*
	120	35	35	35	35	35	35	35	35	35	*	*
D	0	93	88	83	79	76	69	64	60	*	*	*
	5	93	88	83	79	76	69	64	60	*	*	*
	10	93	88	83	79	76	69	64	60	*	*	*
	15	84	84	83	79	76	69	64	60	*	*	*
	20	77	77	77	77	76	69	64	60	*	*	*
	25	73	73	73	73	73	69	64	60	*	*	*
	30	68	68	68	68	68	68	64	60	*	*	*
	35	63	63	63	63	63	63	63	60	*	*	*
	40	59	59	59	59	59	59	59	59	*	*	*
	45	56	56	56	56	56	56	56	56	*	*	*
	50	53	53	53	53	53	53	53	53	*	*	*
	55	51	51	51	51	51	51	51	51	*	*	*
	60	49	49	49	49	49	49	49	49	*	*	*
	70	45	45	45	45	45	45	45	45	*	*	*
	80	43	43	43	43	43	43	43	43	*	*	*
	90	40	40	40	40	40	40	40	40	*	*	*
	100	38	38	38	38	38	38	38	38	*	*	*
	110	36	36	36	36	36	36	36	36	*	*	*
	120	35	35	35	35	35	35	35	35	*	*	*

Notes – see page 92-94, and 95

T17b	Hip - Maximum Span (in) for Roof Slope 20° - 27° & Roof Area 2											H=15
Landscape		Wind Speed (mph)										
Exposure	Snow Load (psf)	100	105	110	115	120	130	140	150	160	170	180
B	0	96	96	96	96	96	96	96	90	84	78	74
	5	96	96	96	96	96	96	96	90	84	78	74
	10	95	95	95	95	95	95	95	90	84	78	74
	15	87	87	87	87	87	87	87	87	84	78	74
	20	81	81	81	81	81	81	81	81	81	78	74
	25	75	75	75	75	75	75	75	75	75	75	74
	30	70	70	70	70	70	70	70	70	70	70	70
	35	66	66	66	66	66	66	66	66	66	66	66
	40	62	62	62	62	62	62	62	62	62	62	62
	45	59	59	59	59	59	59	59	59	59	59	59
	50	56	56	56	56	56	56	56	56	56	56	56
	55	53	53	53	53	53	53	53	53	53	53	53
	60	51	51	51	51	51	51	51	51	51	51	51
	70	48	48	48	48	48	48	48	48	48	48	48
	80	45	45	45	45	45	45	45	45	45	45	45
	90	42	42	42	42	42	42	42	42	42	42	42
	100	40	40	40	40	40	40	40	40	40	40	40
	110	38	38	38	38	38	38	38	38	38	38	38
	120	36	36	36	36	36	36	36	36	36	36	36
C	0	96	96	96	96	93	85	78	73	68	64	60
	5	96	96	96	96	93	85	78	73	68	64	60
	10	95	95	95	95	93	85	78	73	68	64	60
	15	87	87	87	87	87	85	78	73	68	64	60
	20	81	81	81	81	81	81	78	73	68	64	60
	25	75	75	75	75	75	75	75	73	68	64	60
	30	70	70	70	70	70	70	70	70	68	64	60
	35	66	66	66	66	66	66	66	66	65	64	60
	40	62	62	62	62	62	62	62	62	62	62	60
	45	59	59	59	59	59	59	59	59	59	59	58
	50	56	56	56	56	56	56	56	56	56	56	56
	55	53	53	53	53	53	53	53	53	53	53	53
	60	51	51	51	51	51	51	51	51	51	51	51
	70	48	48	48	48	48	48	48	48	48	48	48
	80	45	45	45	45	45	45	45	45	45	45	45
	90	42	42	42	42	42	42	42	42	42	42	42
	100	40	40	40	40	40	40	40	40	40	40	40
	110	38	38	38	38	38	38	38	38	38	38	38
	120	36	36	36	36	36	36	36	36	36	36	36
D	0	96	96	92	87	83	76	70	65	61	58	*
	5	96	96	92	87	83	76	70	65	61	58	*
	10	95	95	92	87	83	76	70	65	61	58	*
	15	87	87	87	87	83	76	70	65	61	58	*
	20	81	81	81	81	81	76	70	65	61	58	*
	25	75	75	75	75	75	75	70	65	61	*	*
	30	70	70	70	70	70	70	69	65	61	*	*
	35	66	66	66	66	66	66	66	65	61	*	*
	40	62	62	62	62	62	62	62	62	61	*	*
	45	59	59	59	59	59	59	59	59	59	*	*
	50	56	56	56	56	56	56	56	56	56	*	*
	55	53	53	53	53	53	53	53	53	53	*	*
	60	51	51	51	51	51	51	51	51	51	*	*
	70	48	48	48	48	48	48	48	48	48	*	*
	80	45	45	45	45	45	45	45	45	45	*	*
	90	42	42	42	42	42	42	42	42	42	*	*
	100	40	40	40	40	40	40	40	40	40	*	*
	110	38	38	38	38	38	38	38	38	38	*	*
	120	36	36	36	36	36	36	36	36	36	*	*

Notes – see page 92-94, and 95

T17c	Hip - Maximum Span (in) for Roof Slope 27° - 45° & Roof Area 2											H=15
Landscape		Wind Speed (mph)										
Exposure	Snow Load (psf)	100	105	110	115	120	130	140	150	160	170	180
B	0	96	96	96	96	96	91	84	77	72	67	63
	5	96	96	96	96	96	91	84	77	72	67	63
	10	96	96	96	96	96	91	84	77	72	67	63
	15	89	89	89	89	89	89	84	77	72	67	63
	20	82	82	82	82	82	82	82	77	72	67	63
	25	77	77	77	77	77	77	77	77	72	67	63
	30	73	73	73	73	73	73	73	73	72	67	63
	35	68	68	68	68	68	68	68	68	68	67	63
	40	65	65	65	65	65	65	65	65	65	65	63
	45	61	61	61	61	61	61	61	61	61	61	61
	50	58	58	58	58	58	58	58	58	58	58	58
	55	56	56	56	56	56	56	56	56	56	56	56
	60	54	54	54	54	54	54	54	54	54	54	54
	70	50	50	50	50	50	50	50	50	50	50	50
	80	47	47	47	47	47	47	47	47	47	47	47
	90	44	44	44	44	44	44	44	44	44	44	44
	100	42	42	42	42	42	42	42	42	42	42	42
	110	40	40	40	40	40	40	40	40	40	40	40
	120	38	38	32	38	38	38	38	38	38	38	38
C	0	96	92	88	84	80	73	67	62	58	54	*
	5	96	92	88	84	80	73	67	62	58	54	*
	10	96	92	88	84	80	73	67	62	58	54	*
	15	89	89	88	84	80	73	67	62	58	54	*
	20	82	82	82	82	80	73	67	62	58	*	*
	25	77	77	77	77	77	73	67	62	58	*	*
	30	73	73	73	73	73	73	67	62	58	*	*
	35	68	68	68	68	68	68	67	62	58	*	*
	40	65	65	65	65	65	65	65	62	58	*	*
	45	61	61	61	61	61	61	61	61	58	*	*
	50	58	58	58	58	58	58	58	58	58	*	*
	55	56	56	56	56	56	56	56	56	*	*	*
	60	54	54	54	54	54	54	54	54	*	*	*
	70	50	50	50	50	50	50	50	50	*	*	*
	80	47	47	47	47	47	47	47	47	*	*	*
	90	44	44	44	44	44	44	44	44	*	*	*
	100	42	42	42	42	42	42	42	42	*	*	*
	110	40	40	40	40	40	40	40	40	*	*	*
	120	38	38	38	38	38	38	38	38	*	*	*
D	0	88	83	79	75	72	66	60	56	*	*	*
	5	88	83	79	75	72	66	60	56	*	*	*
	10	88	83	79	75	72	66	60	56	*	*	*
	15	88	83	79	75	72	66	60	56	*	*	*
	20	82	82	79	75	72	66	60	56	*	*	*
	25	77	77	77	75	72	66	60	56	*	*	*
	30	73	73	73	73	72	66	60	56	*	*	*
	35	68	68	68	68	68	66	60	*	*	*	*
	40	65	65	65	65	65	65	60	*	*	*	*
	45	61	61	61	61	61	61	60	*	*	*	*
	50	58	58	58	58	58	58	58	*	*	*	*
	55	56	56	56	56	56	56	56	*	*	*	*
	60	54	54	54	54	54	54	54	*	*	*	*
	70	50	50	50	50	50	50	50	*	*	*	*
	80	47	47	47	47	47	47	47	*	*	*	*
	90	44	44	44	44	44	44	44	*	*	*	*
	100	42	42	42	42	42	42	42	*	*	*	*
	110	40	40	40	40	40	40	40	*	*	*	*
	120	38	38	38	38	38	38	38	*	*	*	*

Notes – see page 92-94, and 95

T18a	Hip - Maximum Span (in) for Roof Slope 7° - 20° & Roof Area 2											H=30
Landscape		Wind Speed (mph)										
Exposure	Snow Load (psf)	100	105	110	115	120	130	140	150	160	170	180
B	0	96	96	96	96	94	86	79	73	68	64	61
	5	96	96	96	96	94	86	79	73	68	64	61
	10	94	94	94	94	94	86	79	73	68	64	61
	15	84	84	84	84	84	84	79	73	68	64	61
	20	77	77	77	77	77	77	77	73	68	64	61
	25	73	73	73	73	73	73	73	73	68	64	61
	30	68	68	68	68	68	68	68	68	68	64	61
	35	63	63	63	63	63	63	63	63	63	63	61
	40	59	59	59	59	59	59	59	59	59	59	59
	45	56	56	56	56	56	56	56	56	56	56	56
	50	53	53	53	53	53	53	53	53	53	53	53
	55	51	51	51	51	51	51	51	51	51	51	51
	60	49	49	49	49	49	49	49	49	49	49	49
	70	45	45	45	45	45	45	45	45	45	45	45
	80	43	43	43	43	43	43	43	43	43	43	43
	90	40	40	40	40	40	40	40	40	40	40	40
	100	38	38	38	38	38	38	38	38	38	38	38
	110	36	36	36	36	36	36	36	36	36	36	36
	120	35	35	35	35	35	35	35	35	35	35	35
C	0	95	90	86	82	78	71	66	61	57	*	*
	5	95	90	86	82	78	71	66	61	57	*	*
	10	94	90	86	82	78	71	66	61	57	*	*
	15	84	84	84	82	78	71	66	61	57	*	*
	20	77	77	77	77	77	71	66	61	*	*	*
	25	73	73	73	73	73	71	66	61	*	*	*
	30	68	68	68	68	68	68	66	61	*	*	*
	35	63	63	63	63	63	63	63	61	*	*	*
	40	59	59	59	59	59	59	59	59	*	*	*
	45	56	56	56	56	56	56	56	56	*	*	*
	50	53	53	53	53	53	53	53	53	*	*	*
	55	51	51	51	51	51	51	51	51	*	*	*
	60	49	49	49	49	49	49	49	49	*	*	*
	70	45	45	45	45	45	45	45	45	*	*	*
	80	43	43	43	43	43	43	43	43	*	*	*
	90	40	40	40	40	40	40	40	40	*	*	*
	100	38	38	38	38	38	38	38	38	*	*	*
	110	36	36	36	36	36	36	36	36	*	*	*
	120	35	35	35	35	35	35	35	35	*	*	*
D	0	87	82	78	74	71	65	60	*	*	*	*
	5	87	82	78	74	71	65	60	*	*	*	*
	10	87	82	78	74	71	65	60	*	*	*	*
	15	84	82	78	74	71	65	60	*	*	*	*
	20	77	77	77	74	71	65	60	*	*	*	*
	25	73	73	73	73	71	65	60	*	*	*	*
	30	68	68	68	68	68	65	60	*	*	*	*
	35	63	63	63	63	63	63	60	*	*	*	*
	40	59	59	59	59	59	59	59	*	*	*	*
	45	56	56	56	56	56	56	56	*	*	*	*
	50	53	53	53	53	53	53	53	*	*	*	*
	55	51	51	51	51	51	51	51	*	*	*	*
	60	49	49	49	49	49	49	49	*	*	*	*
	70	45	45	45	45	45	45	45	*	*	*	*
	80	43	43	43	43	43	43	43	*	*	*	*
	90	40	40	40	40	40	40	40	*	*	*	*
	100	38	38	38	38	38	38	38	*	*	*	*
	110	36	36	36	36	36	36	36	*	*	*	*
	120	35	35	35	35	35	35	35	*	*	*	*

Notes – see page 92-94, and 95

T18b	Hip - Maximum Span (in) for Roof Slope 20° - 27° & Roof Area 2											H=30
Landscape		Wind Speed (mph)										
Exposure	Snow Load (psf)	100	105	110	115	120	130	140	150	160	170	180
B	0	96	96	96	96	96	94	87	81	75	70	66
	5	96	96	96	96	96	94	87	81	75	70	66
	10	95	95	95	95	95	94	87	81	75	70	66
	15	87	87	87	87	87	87	87	81	75	70	66
	20	81	81	81	81	81	81	81	81	75	70	66
	25	75	75	75	75	75	75	75	75	75	70	66
	30	70	70	70	70	70	70	70	70	70	69	66
	35	66	66	66	66	66	66	66	66	66	66	65
	40	62	62	62	62	62	62	62	62	62	62	62
	45	59	59	59	59	59	59	59	59	59	59	59
	50	56	56	56	56	56	56	56	56	56	56	56
	55	53	53	53	53	53	53	53	53	53	53	53
	60	51	51	51	51	51	51	51	51	51	51	51
	70	48	48	48	48	48	48	48	48	48	48	48
	80	45	45	45	45	45	45	45	45	45	45	45
	90	42	42	42	42	42	42	42	42	42	42	42
	100	40	40	40	40	40	40	40	40	40	40	40
	110	38	38	38	38	38	38	38	38	38	38	38
	120	36	36	36	36	36	36	36	36	36	36	36
C	0	96	96	94	90	86	78	72	67	63	59	*
	5	96	96	94	90	86	78	72	67	63	59	*
	10	95	95	94	90	86	78	72	67	63	59	*
	15	87	87	87	87	86	78	72	67	63	59	*
	20	81	81	81	81	81	78	72	67	63	59	*
	25	75	75	75	75	75	75	72	67	63	59	*
	30	70	70	70	70	70	70	70	67	63	59	*
	35	66	66	66	66	66	66	66	65	63	59	*
	40	62	62	62	62	62	62	62	62	61	59	*
	45	59	59	59	59	59	59	59	59	59	58	*
	50	56	56	56	56	56	56	56	56	56	56	*
	55	53	53	53	53	53	53	53	53	53	53	*
	60	51	51	51	51	51	51	51	51	51	51	*
	70	48	48	48	48	48	48	48	48	48	48	*
	80	45	45	45	45	45	45	45	45	45	45	*
	90	42	42	42	42	42	42	42	42	42	42	*
	100	40	40	40	40	40	40	40	40	40	40	*
	110	38	38	38	38	38	38	38	38	38	38	*
	120	36	36	36	36	36	36	36	36	36	36	*
D	0	95	90	86	82	78	71	66	62	58	*	*
	5	95	90	86	82	78	71	66	62	58	*	*
	10	95	90	86	82	78	71	66	62	58	*	*
	15	87	87	86	82	78	71	66	62	58	*	*
	20	81	81	81	81	78	71	66	62	58	*	*
	25	75	75	75	75	75	71	66	62	58	*	*
	30	70	70	70	70	70	70	66	62	*	*	*
	35	66	66	66	66	66	66	65	62	*	*	*
	40	62	62	62	62	62	62	62	61	*	*	*
	45	59	59	59	59	59	59	59	59	*	*	*
	50	56	56	56	56	56	56	56	56	*	*	*
	55	53	53	53	53	53	53	53	53	*	*	*
	60	51	51	51	51	51	51	51	51	*	*	*
	70	48	48	48	48	48	48	48	48	*	*	*
	80	45	45	45	45	45	45	45	45	*	*	*
	90	42	42	42	42	42	42	42	42	*	*	*
	100	40	40	40	40	40	40	40	40	*	*	*
	110	38	38	38	38	38	38	38	38	*	*	*
	120	36	36	36	36	36	36	36	36	*	*	*

Notes – see page 92-94, and 95

T18c	Hip - Maximum Span (in) for Roof Slope 27° - 45° & Roof Area 2											H=30
Landscape		Wind Speed (mph)										
Exposure	Snow Load (psf)	100	105	110	115	120	130	140	150	160	170	180
B	0	96	96	96	93	89	81	75	69	64	60	56
	5	96	96	96	93	89	81	75	69	64	60	56
	10	96	96	96	93	89	81	75	69	64	60	56
	15	89	89	89	89	89	81	75	69	64	60	56
	20	82	82	82	82	82	81	75	69	64	60	56
	25	77	77	77	77	77	77	75	69	64	60	56
	30	73	73	73	73	73	73	73	69	64	60	56
	35	68	68	68	68	68	68	68	68	64	60	56
	40	65	65	65	65	65	65	65	65	64	60	*
	45	61	61	61	61	61	61	61	61	61	60	*
	50	58	58	58	58	58	58	58	58	58	58	*
	55	56	56	56	56	56	56	56	56	56	56	*
	60	54	54	54	54	54	54	54	54	54	54	*
	70	50	50	50	50	50	50	50	50	50	50	*
	80	47	47	47	47	47	47	47	47	47	47	*
	90	44	44	44	44	44	44	44	44	44	44	*
	100	42	42	42	42	42	42	42	42	42	42	*
	110	40	40	40	40	40	40	40	40	40	40	*
	120	38	38	32	38	38	38	38	38	38	38	*
C	0	90	85	81	77	74	67	62	57	*	*	*
	5	90	85	81	77	74	67	62	57	*	*	*
	10	90	85	81	77	74	67	62	57	*	*	*
	15	89	85	81	77	74	67	62	57	*	*	*
	20	82	82	81	77	74	67	62	57	*	*	*
	25	77	77	77	77	74	67	62	57	*	*	*
	30	73	73	73	73	73	67	62	57	*	*	*
	35	68	68	68	68	68	67	62	57	*	*	*
	40	65	65	65	65	65	65	62	57	*	*	*
	45	61	61	61	61	61	61	61	57	*	*	*
	50	58	58	58	58	58	58	58	*	*	*	*
	55	56	56	56	56	56	56	56	*	*	*	*
	60	54	54	54	54	54	54	54	*	*	*	*
	70	50	50	50	50	50	50	50	*	*	*	*
	80	47	47	47	47	47	47	47	*	*	*	*
	90	44	44	44	44	44	44	44	*	*	*	*
	100	42	42	42	42	42	42	42	*	*	*	*
	110	40	40	40	40	40	40	40	*	*	*	*
	120	38	38	38	38	38	38	38	*	*	*	*
D	0	82	78	74	70	67	61	56	*	*	*	*
	5	82	78	74	70	67	61	56	*	*	*	*
	10	82	78	74	70	67	61	56	*	*	*	*
	15	82	78	74	70	67	61	56	*	*	*	*
	20	82	78	74	70	67	61	56	*	*	*	*
	25	77	77	74	70	67	61	56	*	*	*	*
	30	73	73	73	70	67	61	56	*	*	*	*
	35	68	68	68	68	67	61	56	*	*	*	*
	40	65	65	65	65	65	61	*	*	*	*	*
	45	61	61	61	61	61	61	*	*	*	*	*
	50	58	58	58	58	58	58	*	*	*	*	*
	55	56	56	56	56	56	56	*	*	*	*	*
	60	54	54	54	54	54	54	*	*	*	*	*
	70	50	50	50	50	50	50	*	*	*	*	*
	80	47	47	47	47	47	47	*	*	*	*	*
	90	44	44	44	44	44	44	*	*	*	*	*
	100	42	42	42	42	42	42	*	*	*	*	*
	110	40	40	40	40	40	40	*	*	*	*	*
	120	38	38	38	38	38	38	*	*	*	*	*

Notes – see page 92-94, and 95

T19a	Hip - Maximum Span (in) for Roof Slope 7° - 20° & Roof Area 2											H=15
Portrait		Wind Speed (mph)										
Exposure	Snow Load (psf)	100	105	110	115	120	130	140	150	160	170	180
B	0	96/96	96/96	96/96	96/96	96/96	96/92	91/85	84/78	79/73	73/68	69/64
	5	96/96	96/96	96/96	96/96	96/96	96/92	91/85	84/78	79/73	73/68	69/64
	10	93/85	93/85	93/85	93/85	93/85	93/85	91/85	84/78	79/73	73/68	69/64
	15	83/77	83/77	83/77	83/77	83/77	83/77	83/77	83/77	79/73	73/68	69/64
	20	76/70	76/70	76/70	76/70	76/70	76/70	76/70	76/70	76/70	73/68	69/64
	25	72/66	72/66	72/66	72/66	72/66	72/66	72/66	72/66	72/66	72/66	69/64
	30	66/61	66/61	66/61	66/61	66/61	66/61	66/61	66/61	66/61	66/61	66/61
	35	62/57	62/57	62/57	62/57	62/57	62/57	62/57	62/57	62/57	62/57	62/57
	40	58/53	58/53	58/53	58/53	58/53	58/53	58/53	58/53	58/53	58/53	58/53
	45	55/50	55/50	55/50	55/50	55/50	55/50	55/50	55/50	55/50	55/50	55/50
	50	52/48	52/48	52/48	52/48	52/48	52/48	52/48	52/48	52/48	52/48	52/48
	55	50/46	50/46	50/46	50/46	50/46	50/46	50/46	50/46	50/46	50/46	50/46
	60	48/44	48/44	48/44	48/44	48/44	48/44	48/44	48/44	48/44	48/44	48/44
	70	44/41	44/41	44/41	44/41	44/41	44/41	44/41	44/41	44/41	44/41	44/41
	80	41/38	41/38	41/38	41/38	41/38	41/38	41/38	41/38	41/38	41/38	41/38
	90	39/36	39/36	39/36	39/36	39/36	39/36	39/36	39/36	39/36	39/36	39/36
	100	37/34	37/34	37/34	37/34	37/34	37/34	37/34	37/34	37/34	37/34	37/34
	110	35/32	35/32	35/32	35/32	35/32	35/32	35/32	35/32	35/32	35/32	35/32
	120	34/31	34/31	34/31	34/31	34/31	34/31	34/31	34/31	34/31	34/31	34/31
C	0	96/96	96/94	96/89	91/85	87/81	80/74	73/68	68/63	63/59	59/55	55/*
	5	96/96	96/94	96/89	91/85	87/81	80/74	73/68	68/63	63/59	59/55	55/*
	10	93/85	93/85	93/85	91/85	87/81	80/74	73/68	68/63	63/59	59/55	55/*
	15	83/77	83/77	83/77	83/77	83/77	80/74	73/68	68/63	63/59	59/55	*/*
	20	76/70	76/70	76/70	76/70	76/70	76/70	73/68	68/63	63/59	59/*	*/*
	25	72/66	72/66	72/66	72/66	72/66	72/66	72/66	68/63	63/59	59/*	*/*
	30	66/61	66/61	66/61	66/61	66/61	66/61	66/61	66/61	63/59	59/*	*/*
	35	62/57	62/57	62/57	62/57	62/57	62/57	62/57	62/57	62/57	59/*	*/*
	40	58/53	58/53	58/53	58/53	58/53	58/53	58/53	58/53	58/53	58/*	*/*
	45	55/50	55/50	55/50	55/50	55/50	55/50	55/50	55/50	55/50	55/*	*/*
	50	52/48	52/48	52/48	52/48	52/48	52/48	52/48	52/48	52/48	52/*	*/*
	55	50/46	50/46	50/46	50/46	50/46	50/46	50/46	50/46	50/46	50/*	*/*
	60	48/44	48/44	48/44	48/44	48/44	48/44	48/44	48/44	48/44	48/*	*/*
	70	44/41	44/41	44/41	44/41	44/41	44/41	44/41	44/41	44/41	*/*	*/*
	80	41/38	41/38	41/38	41/38	41/38	41/38	41/38	41/38	41/38	*/*	*/*
	90	39/36	39/36	39/36	39/36	39/36	39/36	39/36	39/36	39/36	*/*	*/*
	100	37/34	37/34	37/34	37/34	37/34	37/34	37/34	37/34	37/34	*/*	*/*
	110	35/32	35/32	35/32	35/32	35/32	35/32	35/32	35/32	35/32	*/*	*/*
	120	34/31	34/31	34/31	34/31	34/31	34/31	34/31	34/31	34/31	*/*	*/*
D	0	96/89	91/84	86/80	82/76	78/73	72/66	66/61	61/56	57/*	*/*	*/*
	5	96/89	91/84	86/80	82/76	78/73	72/66	66/61	61/56	57/*	*/*	*/*
	10	93/85	91/84	86/80	82/76	78/73	72/66	66/61	61/56	57/*	*/*	*/*
	15	83/77	83/77	83/77	82/76	78/73	72/66	66/61	61/56	57/*	*/*	*/*
	20	76/70	76/70	76/70	76/70	76/70	72/66	66/61	61/56	57/*	*/*	*/*
	25	72/66	72/66	72/66	72/66	72/66	72/66	66/61	61/56	57/*	*/*	*/*
	30	66/61	66/61	66/61	66/61	66/61	66/61	66/61	61/56	*/*	*/*	*/*
	35	62/57	62/57	62/57	62/57	62/57	62/57	62/57	61/56	*/*	*/*	*/*
	40	58/53	58/53	58/53	58/53	58/53	58/53	58/53	58/*	*/*	*/*	*/*
	45	55/50	55/50	55/50	55/50	55/50	55/50	55/50	55/*	*/*	*/*	*/*
	50	52/48	52/48	52/48	52/48	52/48	52/48	52/48	52/*	*/*	*/*	*/*
	55	50/46	50/46	50/46	50/46	50/46	50/46	50/46	50/*	*/*	*/*	*/*
	60	48/44	48/44	48/44	48/44	48/44	48/44	48/44	48/*	*/*	*/*	*/*
	70	44/41	44/41	44/41	44/41	44/41	44/41	44/41	44/*	*/*	*/*	*/*
	80	41/38	41/38	41/38	41/38	41/38	41/38	41/38	41/*	*/*	*/*	*/*
	90	39/36	39/36	39/36	39/36	39/36	39/36	39/36	39/*	*/*	*/*	*/*
	100	37/34	37/34	37/34	37/34	37/34	37/34	37/34	37/*	*/*	*/*	*/*
	110	35/32	35/32	35/32	35/32	35/32	35/32	35/32	35/*	*/*	*/*	*/*
	120	34/31	34/31	34/31	34/31	34/31	34/31	34/31	34/*	*/*	*/*	*/*

Notes – see page 92-94, and 95

T19b	Hip - Maximum Span (in) for Roof Slope 20° - 27° & Roof Area 2											H=15
Portrait		Wind Speed (mph)										
Exposure	Snow Load (psf)	100	105	110	115	120	130	140	150	160	170	180
B	0	96/96	96/96	96/96	96/96	96/96	96/96	96/94	93/87	87/81	81/75	76/71
	5	96/96	96/96	96/96	96/96	96/96	96/96	96/94	93/87	87/81	81/75	76/71
	10	94/86	94/86	94/86	94/86	94/86	94/86	94/86	93/86	87/81	81/75	76/71
	15	85/79	85/79	85/79	85/79	85/79	85/79	85/79	85/79	85/79	81/75	76/71
	20	79/73	79/73	79/73	79/73	79/73	79/73	79/73	79/73	79/73	79/73	76/71
	25	74/68	74/68	74/68	74/68	74/68	74/68	74/68	74/68	74/68	74/68	74/68
	30	69/63	69/63	69/63	69/63	69/63	69/63	69/63	69/63	69/63	69/63	69/63
	35	64/59	64/59	64/59	64/59	64/59	64/59	64/59	64/59	64/59	64/59	64/59
	40	60/55	60/55	60/55	60/55	60/55	60/55	60/55	60/55	60/55	60/55	60/55
	45	57/52	57/52	57/52	57/52	57/52	57/52	57/52	57/52	57/52	57/52	57/52
	50	54/50	54/50	54/50	54/50	54/50	54/50	54/50	54/50	54/50	54/50	54/50
	55	52/48	52/48	52/48	52/48	52/48	52/48	52/48	52/48	52/48	52/48	52/48
	60	50/46	50/46	50/46	50/46	50/46	50/46	50/46	50/46	50/46	50/46	50/46
	70	46/42	46/42	46/42	46/42	46/42	46/42	46/42	46/42	46/42	46/42	46/42
	80	43/40	43/40	43/40	43/40	43/40	43/40	43/40	43/40	43/40	43/40	43/40
	90	41/37	41/37	41/37	41/37	41/37	41/37	41/37	41/37	41/37	41/37	41/37
	100	39/35	39/35	39/35	39/35	39/35	39/35	39/35	39/35	39/35	39/35	39/35
	110	37/34	37/34	37/34	37/34	37/34	37/34	37/34	37/34	37/34	37/34	37/34
	120	35/32	35/32	35/32	35/32	35/32	35/32	35/32	35/32	35/32	35/32	35/32
C	0	96/96	96/96	96/96	96/94	96/89	88/82	81/75	75/70	70/65	65/61	61/57
	5	96/96	96/96	96/96	96/94	96/89	88/82	81/75	75/70	70/65	65/61	61/57
	10	94/86	94/86	94/86	94/86	94/86	88/82	81/75	75/70	70/65	65/61	61/57
	15	85/79	85/79	85/79	85/79	85/79	85/79	81/75	75/70	70/65	65/61	61/57
	20	79/73	79/73	79/73	79/73	79/73	79/73	79/73	75/70	70/65	65/61	61/57
	25	74/68	74/68	74/68	74/68	74/68	74/68	74/68	74/68	70/65	65/61	61/57
	30	69/63	69/63	69/63	69/63	69/63	69/63	69/63	69/63	68/63	65/61	61/57
	35	64/59	64/59	64/59	64/59	64/59	64/59	64/59	64/59	64/59	64/59	61/57
	40	60/55	60/55	60/55	60/55	60/55	60/55	60/55	60/55	60/55	60/55	60/55
	45	57/52	57/52	57/52	57/52	57/52	57/52	57/52	57/52	57/52	57/52	57/52
	50	54/50	54/50	54/50	54/50	54/50	54/50	54/50	54/50	54/50	54/50	54/50
	55	52/48	52/48	52/48	52/48	52/48	52/48	52/48	52/48	52/48	52/48	52/*
	60	50/46	50/46	50/46	50/46	50/46	50/46	50/46	50/46	50/46	50/46	50/*
	70	46/42	46/42	46/42	46/42	46/42	46/42	46/42	46/42	46/42	46/42	46/*
	80	43/40	43/40	43/40	43/40	43/40	43/40	43/40	43/40	43/40	43/40	43/*
	90	41/37	41/37	41/37	41/37	41/37	41/37	41/37	41/37	41/37	41/37	41/*
	100	39/35	39/35	39/35	39/35	39/35	39/35	39/35	39/35	39/35	39/35	39/*
	110	37/34	37/34	37/34	37/34	37/34	37/34	37/34	37/34	37/34	37/34	37/*
	120	35/32	35/32	35/32	35/32	35/32	35/32	35/32	35/32	35/32	35/32	35/*
D	0	96/96	96/93	95/89	91/84	87/80	79/73	73/68	67/63	63/58	59/54	55/*
	5	96/96	96/93	95/89	91/84	87/80	79/73	73/68	67/63	63/58	59/54	55/*
	10	94/86	94/86	94/86	91/84	87/80	79/73	73/68	67/63	63/58	59/54	55/*
	15	85/79	85/79	85/79	85/79	85/79	79/73	73/68	67/63	63/58	59/54	55/*
	20	79/73	79/73	79/73	79/73	79/73	79/73	73/68	67/63	63/58	59/*	*/*
	25	74/68	74/68	74/68	74/68	74/68	74/68	73/68	67/63	63/58	59/*	*/*
	30	69/63	69/63	69/63	69/63	69/63	69/63	69/63	67/63	63/58	59/*	*/*
	35	64/59	64/59	64/59	64/59	64/59	64/59	64/59	64/59	63/58	59/*	*/*
	40	60/55	60/55	60/55	60/55	60/55	60/55	60/55	60/55	60/55	59/*	*/*
	45	57/52	57/52	57/52	57/52	57/52	57/52	57/52	57/52	57/52	57/*	*/*
	50	54/50	54/50	54/50	54/50	54/50	54/50	54/50	54/50	54/50	54/*	*/*
	55	52/48	52/48	52/48	52/48	52/48	52/48	52/48	52/48	52/48	52/*	*/*
	60	50/46	50/46	50/46	50/46	50/46	50/46	50/46	50/46	50/46	50/*	*/*
	70	46/42	46/42	46/42	46/42	46/42	46/42	46/42	46/42	46/42	*/*	*/*
	80	43/40	43/40	43/40	43/40	43/40	43/40	43/40	43/40	43/40	*/*	*/*
	90	41/37	41/37	41/37	41/37	41/37	41/37	41/37	41/37	41/*	*/*	*/*
	100	39/35	39/35	39/35	39/35	39/35	39/35	39/35	39/35	39/*	*/*	*/*
	110	37/34	37/34	37/34	37/34	37/34	37/34	37/34	37/34	37/*	*/*	*/*
	120	35/32	35/32	35/32	35/32	35/32	35/32	35/32	35/32	35/*	*/*	*/*

Notes – see page 92-94, and 95

T19c	Hip - Maximum Span (in) for Roof Slope 27° - 45° & Roof Area 2											H=15
Portrait		Wind Speed (mph)										
Exposure	Snow Load (psf)	100	105	110	115	120	130	140	150	160	170	180
B	0	96/96	96/96	96/96	96/96	96/96	96/91	89/84	83/77	77/72	72/67	67/63
	5	96/96	96/96	96/96	96/96	96/96	96/91	89/84	83/77	77/72	72/67	67/63
	10	95/87	95/87	95/87	95/87	95/87	95/87	89/84	83/77	77/72	72/67	67/63
	15	87/80	87/80	87/80	87/80	87/80	87/80	87/80	83/77	77/72	72/67	67/63
	20	81/74	81/74	81/74	81/74	81/74	81/74	81/74	81/74	77/72	72/67	67/63
	25	76/70	76/70	76/70	76/70	76/70	76/70	76/70	76/70	76/70	72/67	67/63
	30	71/66	71/66	71/66	71/66	71/66	71/66	71/66	71/66	71/66	71/66	67/63
	35	67/61	67/61	67/61	67/61	67/61	67/61	67/61	67/61	67/61	67/61	67/61
	40	63/58	63/58	63/58	63/58	63/58	63/58	63/58	63/58	63/58	63/58	63/58
	45	60/55	60/55	60/55	60/55	60/55	60/55	60/55	60/55	60/55	60/55	60/55
	50	57/52	57/52	57/52	57/52	57/52	57/52	57/52	57/52	57/52	57/52	57/52
	55	54/50	54/50	54/50	54/50	54/50	54/50	54/50	54/50	54/50	54/50	54/50
	60	52/48	52/48	52/48	52/48	52/48	52/48	52/48	52/48	52/48	52/48	52/48
	70	48/44	48/44	48/44	48/44	48/44	48/44	48/44	48/44	48/44	48/44	48/44
	80	45/41	45/41	45/41	45/41	45/41	45/41	45/41	45/41	45/41	45/41	45/41
	90	43/39	43/39	43/39	43/39	43/39	43/39	43/39	43/39	43/39	43/39	43/39
	100	40/37	40/37	40/37	40/37	40/37	40/37	40/37	40/37	40/37	40/37	40/37
	110	38/35	38/35	38/35	38/35	38/35	38/35	38/35	38/35	38/35	38/35	38/35
	120	37/34	37/34	37/34	37/34	37/34	37/34	37/34	37/34	37/34	37/34	37/34
C	0	96/96	96/93	94/88	90/84	85/80	78/73	72/67	66/62	61/57	57/53	53/50
	5	96/96	96/93	94/88	90/84	85/80	78/73	72/67	66/62	61/57	57/53	53/50
	10	95/87	95/87	94/87	90/84	85/80	78/73	72/67	66/62	61/57	57/53	53/50
	15	87/80	87/80	87/80	87/80	85/80	78/73	72/67	66/62	61/57	57/53	53/*
	20	81/74	81/74	81/74	81/74	81/74	78/73	72/67	66/62	61/57	57/53	53/*
	25	76/70	76/70	76/70	76/70	76/70	76/70	72/67	66/62	61/57	57/53	*/*
	30	71/66	71/66	71/66	71/66	71/66	71/66	71/66	66/62	61/57	57/*	*/*
	35	67/61	67/61	67/61	67/61	67/61	67/61	67/61	66/61	61/57	57/*	*/*
	40	63/58	63/58	63/58	63/58	63/58	63/58	63/58	63/58	61/57	57/*	*/*
	45	60/55	60/55	60/55	60/55	60/55	60/55	60/55	60/55	60/55	57/*	*/*
	50	57/52	57/52	57/52	57/52	57/52	57/52	57/52	57/52	57/52	57/*	*/*
	55	54/50	54/50	54/50	54/50	54/50	54/50	54/50	54/50	54/50	*/*	*/*
	60	52/48	52/48	52/48	52/48	52/48	52/48	52/48	52/48	52/48	*/*	*/*
	70	48/44	48/44	48/44	48/44	48/44	48/44	48/44	48/44	48/*	*/*	*/*
	80	45/41	45/41	45/41	45/41	45/41	45/41	45/41	45/41	45/*	*/*	*/*
	90	43/39	43/39	43/39	43/39	43/39	43/39	43/39	43/39	43/*	*/*	*/*
	100	40/37	40/37	40/37	40/37	40/37	40/37	40/37	40/37	40/*	*/*	*/*
	110	38/35	38/35	38/35	38/35	38/35	38/35	38/35	38/35	38/*	*/*	*/*
	120	37/34	37/34	37/34	37/34	37/34	37/34	37/34	37/34	37/*	*/*	*/*
D	0	94/88	89/83	85/79	80/75	77/72	70/65	64/60	59/55	55/51	*/*	*/*
	5	94/88	89/83	85/79	80/75	77/72	70/65	64/60	59/55	55/51	*/*	*/*
	10	94/87	89/83	85/79	80/75	77/72	70/65	64/60	59/55	55/51	*/*	*/*
	15	87/80	87/80	85/79	80/75	77/72	70/65	64/60	59/55	55/51	*/*	*/*
	20	81/74	81/74	81/74	80/74	77/72	70/65	64/60	59/55	55/*	*/*	*/*
	25	76/70	76/70	76/70	76/70	76/70	70/65	64/60	59/55	55/*	*/*	*/*
	30	71/66	71/66	71/66	71/66	71/66	70/65	64/60	59/55	55/*	*/*	*/*
	35	67/61	67/61	67/61	67/61	67/61	67/61	64/60	59/55	*/*	*/*	*/*
	40	63/58	63/58	63/58	63/58	63/58	63/58	63/58	59/55	*/*	*/*	*/*
	45	60/55	60/55	60/55	60/55	60/55	60/55	60/55	59/*	*/*	*/*	*/*
	50	57/52	57/52	57/52	57/52	57/52	57/52	57/52	57/*	*/*	*/*	*/*
	55	54/50	54/50	54/50	54/50	54/50	54/50	54/50	54/*	*/*	*/*	*/*
	60	52/48	52/48	52/48	52/48	52/48	52/48	52/48	52/*	*/*	*/*	*/*
	70	48/44	48/44	48/44	48/44	48/44	48/44	48/44	48/*	*/*	*/*	*/*
	80	45/41	45/41	45/41	45/41	45/41	45/41	45/41	45/*	*/*	*/*	*/*
	90	43/39	43/39	43/39	43/39	43/39	43/39	43/39	*/*	*/*	*/*	*/*
	100	40/37	40/37	40/37	40/37	40/37	40/37	40/37	*/*	*/*	*/*	*/*
	110	38/35	38/35	38/35	38/35	38/35	38/35	38/35	*/*	*/*	*/*	*/*
	120	37/34	37/34	37/34	37/34	37/34	37/34	37/*	*/*	*/*	*/*	*/*

Notes – see page 92-94, and 95

T20a	Hip - Maximum Span (in) for Roof Slope 7° - 20° & Roof Area 2											H=30
Portrait		Wind Speed (mph)										
Exposure	Snow Load (psf)	100	105	110	115	120	130	140	150	160	170	180
B	0	96/96	96/96	96/96	96/94	96/90	89/82	82/76	76/70	70/65	66/61	62/57
	5	96/96	96/96	96/96	96/94	96/90	89/82	82/76	76/70	70/65	66/61	62/57
	10	93/85	93/85	93/85	93/85	93/85	89/82	82/76	76/70	70/65	66/61	62/57
	15	83/77	83/77	83/77	83/77	83/77	83/77	82/76	76/70	70/65	66/61	62/57
	20	76/70	76/70	76/70	76/70	76/70	76/70	76/70	76/70	70/65	66/61	62/57
	25	72/66	72/66	72/66	72/66	72/66	72/66	72/66	72/66	70/65	66/61	62/57
	30	66/61	66/61	66/61	66/61	66/61	66/61	66/61	66/61	66/61	66/61	62/57
	35	62/57	62/57	62/57	62/57	62/57	62/57	62/57	62/57	62/57	62/57	62/57
	40	58/53	58/53	58/53	58/53	58/53	58/53	58/53	58/53	58/53	58/53	58/53
	45	55/50	55/50	55/50	55/50	55/50	55/50	55/50	55/50	55/50	55/50	55/50
	50	52/48	52/48	52/48	52/48	52/48	52/48	52/48	52/48	52/48	52/48	52/48
	55	50/46	50/46	50/46	50/46	50/46	50/46	50/46	50/46	50/46	50/46	50/*
	60	48/44	48/44	48/44	48/44	48/44	48/44	48/44	48/44	48/44	48/44	48/*
	70	44/41	44/41	44/41	44/41	44/41	44/41	44/41	44/41	44/41	44/41	44/*
	80	41/38	41/38	41/38	41/38	41/38	41/38	41/38	41/38	41/38	41/38	41/*
	90	39/36	39/36	39/36	39/36	39/36	39/36	39/36	39/36	39/36	39/36	39/*
	100	37/34	37/34	37/34	37/34	37/34	37/34	37/34	37/34	37/34	37/34	37/*
	110	35/32	35/32	35/32	35/32	35/32	35/32	35/32	35/32	35/32	35/32	35/*
	120	34/31	34/31	34/31	34/31	34/31	34/31	34/31	34/31	34/31	34/31	34/*
C	0	96/91	93/87	89/82	84/78	80/75	73/68	68/63	63/58	58/54	*/*	*/*
	5	96/91	93/87	89/82	84/78	80/75	73/68	68/63	63/58	58/54	*/*	*/*
	10	93/85	93/85	89/82	84/78	80/75	73/68	68/63	63/58	58/54	*/*	*/*
	15	83/77	83/77	83/77	83/77	80/75	73/68	68/63	63/58	58/*	*/*	*/*
	20	76/70	76/70	76/70	76/70	76/70	73/68	68/63	63/58	58/*	*/*	*/*
	25	72/66	72/66	72/66	72/66	72/66	72/66	68/63	63/58	58/*	*/*	*/*
	30	66/61	66/61	66/61	66/61	66/61	66/61	66/61	63/58	58/*	*/*	*/*
	35	62/57	62/57	62/57	62/57	62/57	62/57	62/57	62/57	58/*	*/*	*/*
	40	58/53	58/53	58/53	58/53	58/53	58/53	58/53	58/53	58/*	*/*	*/*
	45	55/50	55/50	55/50	55/50	55/50	55/50	55/50	55/50	55/*	*/*	*/*
	50	52/48	52/48	52/48	52/48	52/48	52/48	52/48	52/48	52/*	*/*	*/*
	55	50/46	50/46	50/46	50/46	50/46	50/46	50/46	50/46	*/*	*/*	*/*
	60	48/44	48/44	48/44	48/44	48/44	48/44	48/44	48/44	*/*	*/*	*/*
	70	44/41	44/41	44/41	44/41	44/41	44/41	44/41	44/41	*/*	*/*	*/*
	80	41/38	41/38	41/38	41/38	41/38	41/38	41/38	41/*	*/*	*/*	*/*
	90	39/36	39/36	39/36	39/36	39/36	39/36	39/36	39/*	*/*	*/*	*/*
	100	37/34	37/34	37/34	37/34	37/34	37/34	37/34	37/*	*/*	*/*	*/*
	110	35/32	35/32	35/32	35/32	35/32	35/32	35/32	35/*	*/*	*/*	*/*
	120	34/31	34/31	34/31	34/31	34/31	34/31	34/31	34/*	*/*	*/*	*/*
D	0	90/83	85/79	81/75	77/71	73/68	67/62	62/57	57/*	*/*	*/*	*/*
	5	90/83	85/79	81/75	77/71	73/68	67/62	62/57	57/*	*/*	*/*	*/*
	10	90/83	85/79	81/75	77/71	73/68	67/62	62/57	57/*	*/*	*/*	*/*
	15	83/77	83/77	81/75	77/71	73/68	67/62	62/57	57/*	*/*	*/*	*/*
	20	76/70	76/70	76/70	76/70	73/68	67/62	62/57	57/*	*/*	*/*	*/*
	25	72/66	72/66	72/66	72/66	72/66	67/62	62/57	57/*	*/*	*/*	*/*
	30	66/61	66/61	66/61	66/61	66/61	66/61	62/57	*/*	*/*	*/*	*/*
	35	62/57	62/57	62/57	62/57	62/57	62/57	62/57	*/*	*/*	*/*	*/*
	40	58/53	58/53	58/53	58/53	58/53	58/53	58/53	*/*	*/*	*/*	*/*
	45	55/50	55/50	55/50	55/50	55/50	55/50	55/50	*/*	*/*	*/*	*/*
	50	52/48	52/48	52/48	52/48	52/48	52/48	52/*	*/*	*/*	*/*	*/*
	55	50/46	50/46	50/46	50/46	50/46	50/46	50/*	*/*	*/*	*/*	*/*
	60	48/44	48/44	48/44	48/44	48/44	48/44	48/*	*/*	*/*	*/*	*/*
	70	44/41	44/41	44/41	44/41	44/41	44/41	44/*	*/*	*/*	*/*	*/*
	80	41/38	41/38	41/38	41/38	41/38	41/38	41/*	*/*	*/*	*/*	*/*
	90	39/36	39/36	39/36	39/36	39/36	39/36	39/*	*/*	*/*	*/*	*/*
	100	37/34	37/34	37/34	37/34	37/34	37/34	37/*	*/*	*/*	*/*	*/*
	110	35/32	35/32	35/32	35/32	35/32	35/32	35/*	*/*	*/*	*/*	*/*
	120	34/31	34/31	34/31	34/31	34/31	34/31	34/*	*/*	*/*	*/*	*/*

Notes – see page 92-94, and 95

T20b	Hip - Maximum Span (in) for Roof Slope 20° - 27° & Roof Area 2											H=30
Portrait		Wind Speed (mph)										
Exposure	Snow Load (psf)	100	105	110	115	120	130	140	150	160	170	180
B	0	96/96	96/96	96/96	96/96	96/96	96/91	90/84	84/78	78/72	73/68	68/63
	5	96/96	96/96	96/96	96/96	96/96	96/91	90/84	84/78	78/72	73/68	68/63
	10	94/86	94/86	94/86	94/86	94/86	94/86	90/84	84/78	78/72	73/68	68/63
	15	85/79	85/79	85/79	85/79	85/79	85/79	85/79	84/78	78/72	73/68	68/63
	20	79/73	79/73	79/73	79/73	79/73	79/73	79/73	79/73	78/72	73/68	68/63
	25	74/68	74/68	74/68	74/68	74/68	74/68	74/68	74/68	74/68	73/68	68/63
	30	69/63	69/63	69/63	69/63	69/63	69/63	69/63	69/63	69/63	69/63	68/63
	35	64/59	64/59	64/59	64/59	64/59	64/59	64/59	64/59	64/59	64/59	64/59
	40	60/55	60/55	60/55	60/55	60/55	60/55	60/55	60/55	60/55	60/55	60/55
	45	57/52	57/52	57/52	57/52	57/52	57/52	57/52	57/52	57/52	57/52	57/52
	50	54/50	54/50	54/50	54/50	54/50	54/50	54/50	54/50	54/50	54/50	54/50
	55	52/48	52/48	52/48	52/48	52/48	52/48	52/48	52/48	52/48	52/48	52/48
	60	50/46	50/46	50/46	50/46	50/46	50/46	50/46	50/46	50/46	50/46	50/46
	70	46/42	46/42	46/42	46/42	46/42	46/42	46/42	46/42	46/42	46/42	46/42
	80	43/40	43/40	43/40	43/40	43/40	43/40	43/40	43/40	43/40	43/40	43/40
	90	41/37	41/37	41/37	41/37	41/37	41/37	41/37	41/37	41/37	41/37	41/37
	100	39/35	39/35	39/35	39/35	39/35	39/35	39/35	39/35	39/35	39/35	39/35
	110	37/34	37/34	37/34	37/34	37/34	37/34	37/34	37/34	37/34	37/34	37/34
	120	35/32	35/32	35/32	35/32	35/32	35/32	35/32	35/32	35/32	35/32	35/32
C	0	96/96	96/96	96/91	93/87	89/83	81/75	75/69	69/64	64/60	60/56	56/*
	5	96/96	96/96	96/91	93/87	89/83	81/75	75/69	69/64	64/60	60/56	56/*
	10	94/86	94/86	94/86	93/86	89/83	81/75	75/69	69/64	64/60	60/56	56/*
	15	85/79	85/79	85/79	85/79	85/79	81/75	75/69	69/64	64/60	60/56	56/*
	20	79/73	79/73	79/73	79/73	79/73	79/73	75/69	69/64	64/60	60/56	56/*
	25	74/68	74/68	74/68	74/68	74/68	74/68	74/68	69/64	64/60	60/56	56/*
	30	69/63	69/63	69/63	69/63	69/63	69/63	69/63	68/63	64/60	60/56	56/*
	35	64/59	64/59	64/59	64/59	64/59	64/59	64/59	64/59	64/59	60/56	*/*
	40	60/55	60/55	60/55	60/55	60/55	60/55	60/55	60/55	60/55	60/*	*/*
	45	57/52	57/52	57/52	57/52	57/52	57/52	57/52	57/52	57/52	57/*	*/*
	50	54/50	54/50	54/50	54/50	54/50	54/50	54/50	54/50	54/50	54/*	*/*
	55	52/48	52/48	52/48	52/48	52/48	52/48	52/48	52/48	52/48	52/*	*/*
	60	50/46	50/46	50/46	50/46	50/46	50/46	50/46	50/46	50/46	50/*	*/*
	70	46/42	46/42	46/42	46/42	46/42	46/42	46/42	46/42	46/42	46/*	*/*
	80	43/40	43/40	43/40	43/40	43/40	43/40	43/40	43/40	43/40	43/*	*/*
	90	41/37	41/37	41/37	41/37	41/37	41/37	41/37	41/37	41/37	41/*	*/*
	100	39/35	39/35	39/35	39/35	39/35	39/35	39/35	39/35	39/35	39/*	*/*
	110	37/34	37/34	37/34	37/34	37/34	37/34	37/34	37/34	37/34	37/*	*/*
	120	35/32	35/32	35/32	35/32	35/32	35/32	35/32	35/32	35/32	35/*	*/*
D	0	96/92	94/87	89/83	85/79	81/75	74/69	68/63	63/58	59/54	55/*	*/*
	5	96/92	94/87	89/83	85/79	81/75	74/69	68/63	63/58	59/54	55/*	*/*
	10	94/86	94/86	89/83	85/79	81/75	74/69	68/63	63/58	59/54	55/*	*/*
	15	85/79	85/79	85/79	85/79	81/75	74/69	68/63	63/58	59/54	55/*	*/*
	20	79/73	79/73	79/73	79/73	79/73	74/69	68/63	63/58	59/*	*/*	*/*
	25	74/68	74/68	74/68	74/68	74/68	73/68	68/63	63/58	59/*	*/*	*/*
	30	69/63	69/63	69/63	69/63	69/63	69/63	68/63	63/58	59/*	*/*	*/*
	35	64/59	64/59	64/59	64/59	64/59	64/59	64/59	63/58	59/*	*/*	*/*
	40	60/55	60/55	60/55	60/55	60/55	60/55	60/55	60/55	59/*	*/*	*/*
	45	57/52	57/52	57/52	57/52	57/52	57/52	57/52	57/52	57/*	*/*	*/*
	50	54/50	54/50	54/50	54/50	54/50	54/50	54/50	54/50	54/*	*/*	*/*
	55	52/48	52/48	52/48	52/48	52/48	52/48	52/48	52/48	52/*	*/*	*/*
	60	50/46	50/46	50/46	50/46	50/46	50/46	50/46	50/46	50/*	*/*	*/*
	70	46/42	46/42	46/42	46/42	46/42	46/42	46/42	46/42	*/*	*/*	*/*
	80	43/40	43/40	43/40	43/40	43/40	43/40	43/40	43/40	*/*	*/*	*/*
	90	41/37	41/37	41/37	41/37	41/37	41/37	41/37	41/37	*/*	*/*	*/*
	100	39/35	39/35	39/35	39/35	39/35	39/35	39/35	39/*	*/*	*/*	*/*
	110	37/34	37/34	37/34	37/34	37/34	37/34	37/34	37/*	*/*	*/*	*/*
	120	35/32	35/32	35/32	35/32	35/32	35/32	35/32	35/*	*/*	*/*	*/*

Notes – see page 92-94, and 95

T20c	Hip - Maximum Span (in) for Roof Slope 27° - 45° & Roof Area 2											H=30
Portrait		Wind Speed (mph)										
Exposure	Snow Load (psf)	100	105	110	115	120	130	140	150	160	170	180
B	0	96/96	96/96	96/96	96/93	95/89	87/81	80/75	74/69	69/64	64/60	60/56
	5	96/96	96/96	96/96	96/93	95/89	87/81	80/75	74/69	69/64	64/60	60/56
	10	95/87	95/87	95/87	95/87	95/87	87/81	80/75	74/69	69/64	64/60	60/56
	15	87/80	87/80	87/80	87/80	87/80	87/80	80/75	74/69	69/64	64/60	60/56
	20	81/74	81/74	81/74	81/74	81/74	81/74	80/74	74/69	69/64	64/60	60/56
	25	76/70	76/70	76/70	76/70	76/70	76/70	76/70	74/69	69/64	64/60	60/56
	30	71/66	71/66	71/66	71/66	71/66	71/66	71/66	71/66	69/64	64/60	60/56
	35	67/61	67/61	67/61	67/61	67/61	67/61	67/61	67/61	67/61	64/60	60/56
	40	63/58	63/58	63/58	63/58	63/58	63/58	63/58	63/58	63/58	63/58	60/56
	45	60/55	60/55	60/55	60/55	60/55	60/55	60/55	60/55	60/55	60/55	60/55
	50	57/52	57/52	57/52	57/52	57/52	57/52	57/52	57/52	57/52	57/52	57/*
	55	54/50	54/50	54/50	54/50	54/50	54/50	54/50	54/50	54/50	54/50	54/*
	60	52/48	52/48	52/48	52/48	52/48	52/48	52/48	52/48	52/48	52/48	52/*
	70	48/44	48/44	48/44	48/44	48/44	48/44	48/44	48/44	48/44	48/44	48/*
	80	45/41	45/41	45/41	45/41	45/41	45/41	45/41	45/41	45/41	45/41	45/*
	90	43/39	43/39	43/39	43/39	43/39	43/39	43/39	43/39	43/39	43/39	43/*
	100	40/37	40/37	40/37	40/37	40/37	40/37	40/37	40/37	40/37	40/37	*/*
	110	38/35	38/35	38/35	38/35	38/35	38/35	38/35	38/35	38/35	38/35	*/*
	120	37/34	37/34	37/34	37/34	37/34	37/34	37/34	37/34	37/34	37/*	*/*
C	0	96/90	91/86	87/81	83/77	79/74	72/67	66/62	61/57	56/53	53/*	*/*
	5	96/90	91/86	87/81	83/77	79/74	72/67	66/62	61/57	56/53	53/*	*/*
	10	95/87	91/86	87/81	83/77	79/74	72/67	66/62	61/57	56/53	53/*	*/*
	15	87/80	87/80	87/80	83/77	79/74	72/67	66/62	61/57	56/53	53/*	*/*
	20	81/74	81/74	81/74	81/74	79/74	72/67	66/62	61/57	56/53	*/*	*/*
	25	76/70	76/70	76/70	76/70	76/70	72/67	66/62	61/57	56/*	*/*	*/*
	30	71/66	71/66	71/66	71/66	71/66	71/66	66/62	61/57	56/*	*/*	*/*
	35	67/61	67/61	67/61	67/61	67/61	67/61	66/61	61/57	56/*	*/*	*/*
	40	63/58	63/58	63/58	63/58	63/58	63/58	63/58	61/57	56/*	*/*	*/*
	45	60/55	60/55	60/55	60/55	60/55	60/55	60/55	60/55	56/*	*/*	*/*
	50	57/52	57/52	57/52	57/52	57/52	57/52	57/52	57/52	*/*	*/*	*/*
	55	54/50	54/50	54/50	54/50	54/50	54/50	54/50	54/50	*/*	*/*	*/*
	60	52/48	52/48	52/48	52/48	52/48	52/48	52/48	52/*	*/*	*/*	*/*
	70	48/44	48/44	48/44	48/44	48/44	48/44	48/44	48/*	*/*	*/*	*/*
	80	45/41	45/41	45/41	45/41	45/41	45/41	45/41	45/*	*/*	*/*	*/*
	90	43/39	43/39	43/39	43/39	43/39	43/39	43/39	43/*	*/*	*/*	*/*
	100	40/37	40/37	40/37	40/37	40/37	40/37	40/37	40/*	*/*	*/*	*/*
	110	38/35	38/35	38/35	38/35	38/35	38/35	38/35	38/*	*/*	*/*	*/*
	120	37/34	37/34	37/34	37/34	37/34	37/34	37/34	*/*	*/*	*/*	*/*
D	0	88/82	83/78	79/74	75/70	71/67	65/61	60/56	55/51	*/*	*/*	*/*
	5	88/82	83/78	79/74	75/70	71/67	65/61	60/56	55/51	*/*	*/*	*/*
	10	88/82	83/78	79/74	75/70	71/67	65/61	60/56	55/51	*/*	*/*	*/*
	15	87/80	83/78	79/74	75/70	71/67	65/61	60/56	55/51	*/*	*/*	*/*
	20	81/74	81/74	79/74	75/70	71/67	65/61	60/56	55/*	*/*	*/*	*/*
	25	76/70	76/70	76/70	75/70	71/67	65/61	60/56	55/*	*/*	*/*	*/*
	30	71/66	71/66	71/66	71/66	71/66	65/61	60/56	55/*	*/*	*/*	*/*
	35	67/61	67/61	67/61	67/61	67/61	65/61	60/56	*/*	*/*	*/*	*/*
	40	63/58	63/58	63/58	63/58	63/58	63/58	60/56	*/*	*/*	*/*	*/*
	45	60/55	60/55	60/55	60/55	60/55	60/55	60/55	*/*	*/*	*/*	*/*
	50	57/52	57/52	57/52	57/52	57/52	57/52	57/*	*/*	*/*	*/*	*/*
	55	54/50	54/50	54/50	54/50	54/50	54/50	54/*	*/*	*/*	*/*	*/*
	60	52/48	52/48	52/48	52/48	52/48	52/48	52/*	*/*	*/*	*/*	*/*
	70	48/44	48/44	48/44	48/44	48/44	48/44	48/*	*/*	*/*	*/*	*/*
	80	45/41	45/41	45/41	45/41	45/41	45/41	45/*	*/*	*/*	*/*	*/*
	90	43/39	43/39	43/39	43/39	43/39	43/39	43/*	*/*	*/*	*/*	*/*
	100	40/37	40/37	40/37	40/37	40/37	40/37	*/*	*/*	*/*	*/*	*/*
	110	38/35	38/35	38/35	38/35	38/35	38/35	*/*	*/*	*/*	*/*	*/*
	120	37/34	37/34	37/34	37/34	37/34	37/34	*/*	*/*	*/*	*/*	*/*

Notes – see page 92-94, and 95

T21a	Hip - Maximum Span (in) for Roof Slope 7° - 20° & Roof Area 3											H=15
Landscape		Wind Speed (mph)										
Exposure	Snow Load (psf)	100	105	110	115	120	130	140	150	160	170	180
B	0	96	96	96	96	96	92	84	78	73	68	64
	5	96	96	96	96	96	92	84	78	73	68	64
	10	94	94	94	94	94	92	84	78	73	68	64
	15	84	84	84	84	84	84	84	78	73	68	64
	20	77	77	77	77	77	77	77	77	73	68	64
	25	73	73	73	73	73	73	73	73	73	68	64
	30	68	68	68	68	68	68	68	68	68	68	64
	35	63	63	63	63	63	63	63	63	63	63	63
	40	59	59	59	59	59	59	59	59	59	59	59
	45	56	56	56	56	56	56	56	56	56	56	56
	50	53	53	53	53	53	53	53	53	53	53	53
	55	51	51	51	51	51	51	51	51	51	51	51
	60	49	49	49	49	49	49	49	49	49	49	49
	70	45	45	45	45	45	45	45	45	45	45	45
	80	43	43	43	43	43	43	43	43	43	43	43
	90	40	40	40	40	40	40	40	40	40	40	40
	100	38	38	38	38	38	38	38	38	38	38	38
	110	36	36	36	36	36	36	36	36	36	36	36
	120	35	35	35	35	35	35	35	35	35	35	35
C	0	96	94	89	85	81	74	68	63	59	*	*
	5	96	94	89	85	81	74	68	63	59	*	*
	10	94	94	89	85	81	74	68	63	59	*	*
	15	84	84	84	84	81	74	68	63	59	*	*
	20	77	77	77	77	77	74	68	63	59	*	*
	25	73	73	73	73	73	73	68	63	59	*	*
	30	68	68	68	68	68	68	68	63	59	*	*
	35	63	63	63	63	63	63	63	63	59	*	*
	40	59	59	59	59	59	59	59	59	59	*	*
	45	56	56	56	56	56	56	56	56	56	*	*
	50	53	53	53	53	53	53	53	53	53	*	*
	55	51	51	51	51	51	51	51	51	51	*	*
	60	49	49	49	49	49	49	49	49	49	*	*
	70	45	45	45	45	45	45	45	45	45	*	*
	80	43	43	43	43	43	43	43	43	43	*	*
	90	40	40	40	40	40	40	40	40	40	*	*
	100	38	38	38	38	38	38	38	38	38	*	*
	110	36	36	36	36	36	36	36	36	36	*	*
	120	35	35	35	35	35	35	35	35	35	*	*
D	0	89	84	80	76	73	67	62	58	*	*	*
	5	89	84	80	76	73	67	62	58	*	*	*
	10	89	84	80	76	73	67	62	58	*	*	*
	15	84	84	80	76	73	67	62	58	*	*	*
	20	77	77	77	76	73	67	62	*	*	*	*
	25	73	73	73	73	73	67	62	*	*	*	*
	30	68	68	68	68	68	67	62	*	*	*	*
	35	63	63	63	63	63	63	62	*	*	*	*
	40	59	59	59	59	59	59	59	*	*	*	*
	45	56	56	56	56	56	56	56	*	*	*	*
	50	53	53	53	53	53	53	53	*	*	*	*
	55	51	51	51	51	51	51	51	*	*	*	*
	60	49	49	49	49	49	49	49	*	*	*	*
	70	45	45	45	45	45	45	45	*	*	*	*
	80	43	43	43	43	43	43	43	*	*	*	*
	90	40	40	40	40	40	40	40	*	*	*	*
	100	38	38	38	38	38	38	38	*	*	*	*
	110	36	36	36	36	36	36	36	*	*	*	*
	120	35	35	35	35	35	35	35	*	*	*	*

Notes – see page 92-94, and 95

T21b	Hip - Maximum Span (in) for Roof Slope 20° - 27° & Roof Area 3											H=15
Landscape		Wind Speed (mph)										
Exposure	Snow Load (psf)	100	105	110	115	120	130	140	150	160	170	180
B	0	*	*	*	*	*	*	*	*	*	*	*
	5	*	*	*	*	*	*	*	*	*	*	*
	10	*	*	*	*	*	*	*	*	*	*	*
	15	*	*	*	*	*	*	*	*	*	*	*
	20	*	*	*	*	*	*	*	*	*	*	*
	25	*	*	*	*	*	*	*	*	*	*	*
	30	*	*	*	*	*	*	*	*	*	*	*
	35	*	*	*	*	*	*	*	*	*	*	*
	40	*	*	*	*	*	*	*	*	*	*	*
	45	*	*	*	*	*	*	*	*	*	*	*
	50	*	*	*	*	*	*	*	*	*	*	*
	55	*	*	*	*	*	*	*	*	*	*	*
	60	*	*	*	*	*	*	*	*	*	*	*
	70	*	*	*	*	*	*	*	*	*	*	*
	80	*	*	*	*	*	*	*	*	*	*	*
	90	*	*	*	*	*	*	*	*	*	*	*
	100	*	*	*	*	*	*	*	*	*	*	*
	110	*	*	*	*	*	*	*	*	*	*	*
	120	*	*	*	*	*	*	*	*	*	*	*
C	0	*	*	*	*	*	*	*	*	*	*	*
	5	*	*	*	*	*	*	*	*	*	*	*
	10	*	*	*	*	*	*	*	*	*	*	*
	15	*	*	*	*	*	*	*	*	*	*	*
	20	*	*	*	*	*	*	*	*	*	*	*
	25	*	*	*	*	*	*	*	*	*	*	*
	30	*	*	*	*	*	*	*	*	*	*	*
	35	*	*	*	*	*	*	*	*	*	*	*
	40	*	*	*	*	*	*	*	*	*	*	*
	45	*	*	*	*	*	*	*	*	*	*	*
	50	*	*	*	*	*	*	*	*	*	*	*
	55	*	*	*	*	*	*	*	*	*	*	*
	60	*	*	*	*	*	*	*	*	*	*	*
	70	*	*	*	*	*	*	*	*	*	*	*
	80	*	*	*	*	*	*	*	*	*	*	*
	90	*	*	*	*	*	*	*	*	*	*	*
	100	*	*	*	*	*	*	*	*	*	*	*
	110	*	*	*	*	*	*	*	*	*	*	*
	120	*	*	*	*	*	*	*	*	*	*	*
D	0	*	*	*	*	*	*	*	*	*	*	*
	5	*	*	*	*	*	*	*	*	*	*	*
	10	*	*	*	*	*	*	*	*	*	*	*
	15	*	*	*	*	*	*	*	*	*	*	*
	20	*	*	*	*	*	*	*	*	*	*	*
	25	*	*	*	*	*	*	*	*	*	*	*
	30	*	*	*	*	*	*	*	*	*	*	*
	35	*	*	*	*	*	*	*	*	*	*	*
	40	*	*	*	*	*	*	*	*	*	*	*
	45	*	*	*	*	*	*	*	*	*	*	*
	50	*	*	*	*	*	*	*	*	*	*	*
	55	*	*	*	*	*	*	*	*	*	*	*
	60	*	*	*	*	*	*	*	*	*	*	*
	70	*	*	*	*	*	*	*	*	*	*	*
	80	*	*	*	*	*	*	*	*	*	*	*
	90	*	*	*	*	*	*	*	*	*	*	*
	100	*	*	*	*	*	*	*	*	*	*	*
	110	*	*	*	*	*	*	*	*	*	*	*
	120	*	*	*	*	*	*	*	*	*	*	*

Notes – see page 92-94, and 95. Reference Table T17b for Roof Area 3 Spans.

T21c	Hip - Maximum Span (in) for Roof Slope 27° - 45° & Roof Area 3											H=15
Landscape		Wind Speed (mph)										
Exposure	Snow Load (psf)	100	105	110	115	120	130	140	150	160	170	180
B	0	96	96	96	96	96	88	80	74	68	63	59
	5	96	96	96	96	96	88	80	74	68	63	59
	10	96	96	96	96	96	88	80	74	68	63	59
	15	89	89	89	89	89	88	80	74	68	63	59
	20	82	82	82	82	82	82	80	74	68	63	59
	25	77	77	77	77	77	77	77	74	68	63	59
	30	73	73	73	73	73	73	73	73	68	63	59
	35	68	68	68	68	68	68	68	68	68	63	59
	40	65	65	65	65	65	65	65	65	65	63	59
	45	61	61	61	61	61	61	61	61	61	61	59
	50	58	58	58	58	58	58	58	58	58	58	58
	55	56	56	56	56	56	56	56	56	56	56	56
	60	54	54	54	54	54	54	54	54	54	54	54
	70	50	50	50	50	50	50	50	50	50	50	*
	80	47	47	47	47	47	47	47	47	47	47	*
	90	44	44	44	44	44	44	44	44	44	44	*
	100	42	42	42	42	42	42	42	42	42	42	*
	110	40	40	40	40	40	40	40	40	40	40	*
	120	38	38	32	38	38	38	38	38	38	38	*
C	0	95	90	85	80	76	69	63	58	54	*	*
	5	95	90	85	80	76	69	63	58	54	*	*
	10	95	90	85	80	76	69	63	58	54	*	*
	15	89	89	85	80	76	69	63	58	54	*	*
	20	82	82	82	80	76	69	63	58	54	*	*
	25	77	77	77	77	76	69	63	58	54	*	*
	30	73	73	73	73	73	69	63	58	*	*	*
	35	68	68	68	68	68	68	63	58	*	*	*
	40	65	65	65	65	65	65	63	58	*	*	*
	45	61	61	61	61	61	61	61	58	*	*	*
	50	58	58	58	58	58	58	58	58	*	*	*
	55	56	56	56	56	56	56	56	56	*	*	*
	60	54	54	54	54	54	54	54	*	*	*	*
	70	50	50	50	50	50	50	50	*	*	*	*
	80	47	47	47	47	47	47	47	*	*	*	*
	90	44	44	44	44	44	44	44	*	*	*	*
	100	42	42	42	42	42	42	42	*	*	*	*
	110	40	40	40	40	40	40	40	*	*	*	*
	120	38	38	38	38	38	38	38	*	*	*	*
D	0	85	80	75	72	68	62	56	52	*	*	*
	5	85	80	75	72	68	62	56	52	*	*	*
	10	85	80	75	72	68	62	56	52	*	*	*
	15	85	80	75	72	68	62	56	52	*	*	*
	20	82	80	75	72	68	62	56	*	*	*	*
	25	77	77	75	72	68	62	56	*	*	*	*
	30	73	73	73	72	68	62	56	*	*	*	*
	35	68	68	68	68	68	62	56	*	*	*	*
	40	65	65	65	65	65	62	56	*	*	*	*
	45	61	61	61	61	61	61	*	*	*	*	*
	50	58	58	58	58	58	58	*	*	*	*	*
	55	56	56	56	56	56	56	*	*	*	*	*
	60	54	54	54	54	54	54	*	*	*	*	*
	70	50	50	50	50	50	50	*	*	*	*	*
	80	47	47	47	47	47	47	*	*	*	*	*
	90	44	44	44	44	44	44	*	*	*	*	*
	100	42	42	42	42	42	*	*	*	*	*	*
	110	40	40	40	40	40	*	*	*	*	*	*
	120	38	38	38	38	38	*	*	*	*	*	*

Notes – see page 92-94, and 95

T22a	Hip - Maximum Span (in) for Roof Slope 7° - 20° & Roof Area 3											H=30
Landscape		Wind Speed (mph)										
Exposure	Snow Load (psf)	100	105	110	115	120	130	140	150	160	170	180
B	0	96	96	96	94	90	82	76	70	66	62	58
	5	96	96	96	94	90	82	76	70	66	62	58
	10	94	94	94	94	90	82	76	70	66	62	58
	15	84	84	84	84	84	82	76	70	66	62	58
	20	77	77	77	77	77	77	76	70	66	62	58
	25	73	73	73	73	73	73	73	70	66	62	58
	30	68	68	68	68	68	68	68	68	66	62	*
	35	63	63	63	63	63	63	63	63	63	62	*
	40	59	59	59	59	59	59	59	59	59	59	*
	45	56	56	56	56	56	56	56	56	56	56	*
	50	53	53	53	53	53	53	53	53	53	53	*
	55	51	51	51	51	51	51	51	51	51	51	*
	60	49	49	49	49	49	49	49	49	49	49	*
	70	45	45	45	45	45	45	45	45	45	45	*
	80	43	43	43	43	43	43	43	43	43	43	*
	90	40	40	40	40	40	40	40	40	40	40	*
	100	38	38	38	38	38	38	38	38	38	38	*
	110	36	36	36	36	36	36	36	36	36	36	*
	120	35	35	35	35	35	35	35	35	35	35	*
C	0	91	86	82	78	74	68	63	59	*	*	*
	5	91	86	82	78	74	68	63	59	*	*	*
	10	91	86	82	78	74	68	63	59	*	*	*
	15	84	84	82	78	74	68	63	59	*	*	*
	20	77	77	77	77	74	68	63	59	*	*	*
	25	73	73	73	73	73	68	63	59	*	*	*
	30	68	68	68	68	68	68	63	59	*	*	*
	35	63	63	63	63	63	63	63	59	*	*	*
	40	59	59	59	59	59	59	59	59	*	*	*
	45	56	56	56	56	56	56	56	56	*	*	*
	50	53	53	53	53	53	53	53	53	*	*	*
	55	51	51	51	51	51	51	51	51	*	*	*
	60	49	49	49	49	49	49	49	49	*	*	*
	70	45	45	45	45	45	45	45	45	*	*	*
	80	43	43	43	43	43	43	43	43	*	*	*
	90	40	40	40	40	40	40	40	40	*	*	*
	100	38	38	38	38	38	38	38	38	*	*	*
	110	36	36	36	36	36	36	36	36	*	*	*
	120	35	35	35	35	35	35	35	35	*	*	*
D	0	83	79	75	71	68	63	58	*	*	*	*
	5	83	79	75	71	68	63	58	*	*	*	*
	10	83	79	75	71	68	63	58	*	*	*	*
	15	83	79	75	71	68	63	58	*	*	*	*
	20	77	77	75	71	68	63	58	*	*	*	*
	25	73	73	73	71	68	63	*	*	*	*	*
	30	68	68	68	68	68	63	*	*	*	*	*
	35	63	63	63	63	63	63	*	*	*	*	*
	40	59	59	59	59	59	59	*	*	*	*	*
	45	56	56	56	56	56	56	*	*	*	*	*
	50	53	53	53	53	53	53	*	*	*	*	*
	55	51	51	51	51	51	51	*	*	*	*	*
	60	49	49	49	49	49	49	*	*	*	*	*
	70	45	45	45	45	45	45	*	*	*	*	*
	80	43	43	43	43	43	43	*	*	*	*	*
	90	40	40	40	40	40	40	*	*	*	*	*
	100	38	38	38	38	38	38	*	*	*	*	*
	110	36	36	36	36	36	36	*	*	*	*	*
	120	35	35	35	35	35	35	*	*	*	*	*

Notes – see page 92-94, and 95

T22b	Hip - Maximum Span (in) for Roof Slope 20° - 27° & Roof Area 3											H=30
Landscape		Wind Speed (mph)										
Exposure	Snow Load (psf)	100	105	110	115	120	130	140	150	160	170	180
B	0	*	*	*	*	*	*	*	*	*	*	*
	5	*	*	*	*	*	*	*	*	*	*	*
	10	*	*	*	*	*	*	*	*	*	*	*
	15	*	*	*	*	*	*	*	*	*	*	*
	20	*	*	*	*	*	*	*	*	*	*	*
	25	*	*	*	*	*	*	*	*	*	*	*
	30	*	*	*	*	*	*	*	*	*	*	*
	35	*	*	*	*	*	*	*	*	*	*	*
	40	*	*	*	*	*	*	*	*	*	*	*
	45	*	*	*	*	*	*	*	*	*	*	*
	50	*	*	*	*	*	*	*	*	*	*	*
	55	*	*	*	*	*	*	*	*	*	*	*
	60	*	*	*	*	*	*	*	*	*	*	*
	70	*	*	*	*	*	*	*	*	*	*	*
	80	*	*	*	*	*	*	*	*	*	*	*
	90	*	*	*	*	*	*	*	*	*	*	*
	100	*	*	*	*	*	*	*	*	*	*	*
	110	*	*	*	*	*	*	*	*	*	*	*
	120	*	*	*	*	*	*	*	*	*	*	*
C	0	*	*	*	*	*	*	*	*	*	*	*
	5	*	*	*	*	*	*	*	*	*	*	*
	10	*	*	*	*	*	*	*	*	*	*	*
	15	*	*	*	*	*	*	*	*	*	*	*
	20	*	*	*	*	*	*	*	*	*	*	*
	25	*	*	*	*	*	*	*	*	*	*	*
	30	*	*	*	*	*	*	*	*	*	*	*
	35	*	*	*	*	*	*	*	*	*	*	*
	40	*	*	*	*	*	*	*	*	*	*	*
	45	*	*	*	*	*	*	*	*	*	*	*
	50	*	*	*	*	*	*	*	*	*	*	*
	55	*	*	*	*	*	*	*	*	*	*	*
	60	*	*	*	*	*	*	*	*	*	*	*
	70	*	*	*	*	*	*	*	*	*	*	*
	80	*	*	*	*	*	*	*	*	*	*	*
	90	*	*	*	*	*	*	*	*	*	*	*
	100	*	*	*	*	*	*	*	*	*	*	*
	110	*	*	*	*	*	*	*	*	*	*	*
	120	*	*	*	*	*	*	*	*	*	*	*
D	0	*	*	*	*	*	*	*	*	*	*	*
	5	*	*	*	*	*	*	*	*	*	*	*
	10	*	*	*	*	*	*	*	*	*	*	*
	15	*	*	*	*	*	*	*	*	*	*	*
	20	*	*	*	*	*	*	*	*	*	*	*
	25	*	*	*	*	*	*	*	*	*	*	*
	30	*	*	*	*	*	*	*	*	*	*	*
	35	*	*	*	*	*	*	*	*	*	*	*
	40	*	*	*	*	*	*	*	*	*	*	*
	45	*	*	*	*	*	*	*	*	*	*	*
	50	*	*	*	*	*	*	*	*	*	*	*
	55	*	*	*	*	*	*	*	*	*	*	*
	60	*	*	*	*	*	*	*	*	*	*	*
	70	*	*	*	*	*	*	*	*	*	*	*
	80	*	*	*	*	*	*	*	*	*	*	*
	90	*	*	*	*	*	*	*	*	*	*	*
	100	*	*	*	*	*	*	*	*	*	*	*
	110	*	*	*	*	*	*	*	*	*	*	*
	120	*	*	*	*	*	*	*	*	*	*	*

Notes – see page 92-94, and 95. Reference Table T18b for Roof Area 3 Spans.

T22c	Hip - Maximum Span (in) for Roof Slope 27° - 45° & Roof Area 3											H=30
Landscape		Wind Speed (mph)										
Exposure	Snow Load (psf)	100	105	110	115	120	130	140	150	160	170	180
B	0	96	96	95	90	86	78	71	65	61	56	52
	5	96	96	95	90	86	78	71	65	61	56	52
	10	96	96	95	90	86	78	71	65	61	56	52
	15	89	89	89	89	86	78	71	65	61	56	52
	20	82	82	82	82	82	78	71	65	61	56	52
	25	77	77	77	77	77	77	71	65	61	56	*
	30	73	73	73	73	73	73	71	65	61	56	*
	35	68	68	68	68	68	68	68	65	61	56	*
	40	65	65	65	65	65	65	65	65	61	56	*
	45	61	61	61	61	61	61	61	61	61	*	*
	50	58	58	58	58	58	58	58	58	58	*	*
	55	56	56	56	56	56	56	56	56	56	*	*
	60	54	54	54	54	54	54	54	54	54	*	*
	70	50	50	50	50	50	50	50	50	50	*	*
	80	47	47	47	47	47	47	47	47	47	*	*
	90	44	44	44	44	44	44	44	44	*	*	*
	100	42	42	42	42	42	42	42	42	*	*	*
	110	40	40	40	40	40	40	40	40	*	*	*
	120	38	38	32	38	38	38	38	38	*	*	*
C	0	87	82	78	74	70	63	58	53	*	*	*
	5	87	82	78	74	70	63	58	53	*	*	*
	10	87	82	78	74	70	63	58	53	*	*	*
	15	87	82	78	74	70	63	58	53	*	*	*
	20	82	82	78	74	70	63	58	53	*	*	*
	25	77	77	77	74	70	63	58	*	*	*	*
	30	73	73	73	73	70	63	58	*	*	*	*
	35	68	68	68	68	68	63	58	*	*	*	*
	40	65	65	65	65	65	63	58	*	*	*	*
	45	61	61	61	61	61	61	58	*	*	*	*
	50	58	58	58	58	58	58	58	*	*	*	*
	55	56	56	56	56	56	56	*	*	*	*	*
	60	54	54	54	54	54	54	*	*	*	*	*
	70	50	50	50	50	50	50	*	*	*	*	*
	80	47	47	47	47	47	47	*	*	*	*	*
	90	44	44	44	44	44	44	*	*	*	*	*
	100	42	42	42	42	42	42	*	*	*	*	*
	110	40	40	40	40	40	40	*	*	*	*	*
	120	38	38	38	38	38	38	*	*	*	*	*
D	0	79	74	70	66	63	57	52	*	*	*	*
	5	79	74	70	66	63	57	52	*	*	*	*
	10	79	74	70	66	63	57	52	*	*	*	*
	15	79	74	70	66	63	57	52	*	*	*	*
	20	79	74	70	66	63	57	52	*	*	*	*
	25	77	74	70	66	63	57	*	*	*	*	*
	30	73	73	70	66	63	57	*	*	*	*	*
	35	68	68	68	66	63	57	*	*	*	*	*
	40	65	65	65	65	63	57	*	*	*	*	*
	45	61	61	61	61	61	57	*	*	*	*	*
	50	58	58	58	58	58	*	*	*	*	*	*
	55	56	56	56	56	56	*	*	*	*	*	*
	60	54	54	54	54	54	*	*	*	*	*	*
	70	50	50	50	50	50	*	*	*	*	*	*
	80	47	47	47	47	47	*	*	*	*	*	*
	90	44	44	44	44	44	*	*	*	*	*	*
	100	42	42	42	42	42	*	*	*	*	*	*
	110	40	40	40	40	40	*	*	*	*	*	*
	120	38	38	38	38	38	*	*	*	*	*	*

Notes – see page 92-94, and 95

T23a	Hip - Maximum Span (in) for Roof Slope 7° - 20° & Roof Area 3											H=15
Portrait		Wind Speed (mph)										
Exposure	Snow Load (psf)	100	105	110	115	120	130	140	150	160	170	180
B	0	96/96	96/96	96/96	96/96	96/96	95/88	87/81	81/75	75/70	70/65	66/61
	5	96/96	96/96	96/96	96/96	96/96	95/88	87/81	81/75	75/70	70/65	66/61
	10	93/85	93/85	93/85	93/85	93/85	93/85	87/81	81/75	75/70	70/65	66/61
	15	83/77	83/77	83/77	83/77	83/77	83/77	83/77	81/75	75/70	70/65	66/61
	20	76/70	76/70	76/70	76/70	76/70	76/70	76/70	76/70	75/70	70/65	66/61
	25	72/66	72/66	72/66	72/66	72/66	72/66	72/66	72/66	72/66	70/65	66/61
	30	66/61	66/61	66/61	66/61	66/61	66/61	66/61	66/61	66/61	66/61	66/61
	35	62/57	62/57	62/57	62/57	62/57	62/57	62/57	62/57	62/57	62/57	62/57
	40	58/53	58/53	58/53	58/53	58/53	58/53	58/53	58/53	58/53	58/53	58/53
	45	55/50	55/50	55/50	55/50	55/50	55/50	55/50	55/50	55/50	55/50	55/50
	50	52/48	52/48	52/48	52/48	52/48	52/48	52/48	52/48	52/48	52/48	52/48
	55	50/46	50/46	50/46	50/46	50/46	50/46	50/46	50/46	50/46	50/46	50/46
	60	48/44	48/44	48/44	48/44	48/44	48/44	48/44	48/44	48/44	48/44	48/44
	70	44/41	44/41	44/41	44/41	44/41	44/41	44/41	44/41	44/41	44/41	44/41
	80	41/38	41/38	41/38	41/38	41/38	41/38	41/38	41/38	41/38	41/38	41/38
	90	39/36	39/36	39/36	39/36	39/36	39/36	39/36	39/36	39/36	39/36	39/36
	100	37/34	37/34	37/34	37/34	37/34	37/34	37/34	37/34	37/34	37/34	37/34
	110	35/32	35/32	35/32	35/32	35/32	35/32	35/32	35/32	35/32	35/32	35/32
	120	34/31	34/31	34/31	34/31	34/31	34/31	34/31	34/31	34/31	34/31	34/31
C	0	96/95	96/90	92/85	87/81	83/77	76/71	70/65	65/60	60/56	56/*	*/*
	5	96/95	96/90	92/85	87/81	83/77	76/71	70/65	65/60	60/56	56/*	*/*
	10	93/85	93/85	92/85	87/81	83/77	76/71	70/65	65/60	60/56	56/*	*/*
	15	83/77	83/77	83/77	83/77	83/77	76/71	70/65	65/60	60/56	56/*	*/*
	20	76/70	76/70	76/70	76/70	76/70	76/70	70/65	65/60	60/56	56/*	*/*
	25	72/66	72/66	72/66	72/66	72/66	72/66	70/65	65/60	60/56	*/*	*/*
	30	66/61	66/61	66/61	66/61	66/61	66/61	66/61	65/60	60/56	*/*	*/*
	35	62/57	62/57	62/57	62/57	62/57	62/57	62/57	62/57	60/*	*/*	*/*
	40	58/53	58/53	58/53	58/53	58/53	58/53	58/53	58/53	58/*	*/*	*/*
	45	55/50	55/50	55/50	55/50	55/50	55/50	55/50	55/50	55/*	*/*	*/*
	50	52/48	52/48	52/48	52/48	52/48	52/48	52/48	52/48	52/*	*/*	*/*
	55	50/46	50/46	50/46	50/46	50/46	50/46	50/46	50/46	50/*	*/*	*/*
	60	48/44	48/44	48/44	48/44	48/44	48/44	48/44	48/44	48/*	*/*	*/*
	70	44/41	44/41	44/41	44/41	44/41	44/41	44/41	44/41	44/*	*/*	*/*
	80	41/38	41/38	41/38	41/38	41/38	41/38	41/38	41/38	41/*	*/*	*/*
	90	39/36	39/36	39/36	39/36	39/36	39/36	39/36	39/36	39/*	*/*	*/*
	100	37/34	37/34	37/34	37/34	37/34	37/34	37/34	37/34	37/*	*/*	*/*
	110	35/32	35/32	35/32	35/32	35/32	35/32	35/32	35/32	35/*	*/*	*/*
	120	34/31	34/31	34/31	34/31	34/31	34/31	34/31	34/31	34/*	*/*	*/*
D	0	92/85	87/81	82/77	78/73	75/69	68/63	63/58	58/54	*/*	*/*	*/*
	5	92/85	87/81	82/77	78/73	75/69	68/63	63/58	58/54	*/*	*/*	*/*
	10	92/85	87/81	82/77	78/73	75/69	68/63	63/58	58/54	*/*	*/*	*/*
	15	83/77	83/77	82/77	78/73	75/69	68/63	63/58	58/*	*/*	*/*	*/*
	20	76/70	76/70	76/70	76/70	75/69	68/63	63/58	58/*	*/*	*/*	*/*
	25	72/66	72/66	72/66	72/66	72/66	68/63	63/58	58/*	*/*	*/*	*/*
	30	66/61	66/61	66/61	66/61	66/61	66/61	63/58	58/*	*/*	*/*	*/*
	35	62/57	62/57	62/57	62/57	62/57	62/57	62/57	58/*	*/*	*/*	*/*
	40	58/53	58/53	58/53	58/53	58/53	58/53	58/53	58/*	*/*	*/*	*/*
	45	55/50	55/50	55/50	55/50	55/50	55/50	55/50	55/*	*/*	*/*	*/*
	50	52/48	52/48	52/48	52/48	52/48	52/48	52/48	52/*	*/*	*/*	*/*
	55	50/46	50/46	50/46	50/46	50/46	50/46	50/46	*/*	*/*	*/*	*/*
	60	48/44	48/44	48/44	48/44	48/44	48/44	48/44	*/*	*/*	*/*	*/*
	70	44/41	44/41	44/41	44/41	44/41	44/41	44/41	*/*	*/*	*/*	*/*
	80	41/38	41/38	41/38	41/38	41/38	41/38	41/38	*/*	*/*	*/*	*/*
	90	39/36	39/36	39/36	39/36	39/36	39/36	39/*	*/*	*/*	*/*	*/*
	100	37/34	37/34	37/34	37/34	37/34	37/34	37/*	*/*	*/*	*/*	*/*
	110	35/32	35/32	35/32	35/32	35/32	35/32	35/*	*/*	*/*	*/*	*/*
	120	34/31	34/31	34/31	34/31	34/31	34/31	34/*	*/*	*/*	*/*	*/*

Notes – see page 92-94, and 95

T23b	Hip - Maximum Span (in) for Roof Slope 20° - 27° & Roof Area 3											H=15
Portrait		Wind Speed (mph)										
Exposure	Snow Load (psf)	100	105	110	115	120	130	140	150	160	170	180
B	0	*/*	*/*	*/*	*/*	*/*	*/*	*/*	*/*	*/*	*/*	*/*
	5	*/*	*/*	*/*	*/*	*/*	*/*	*/*	*/*	*/*	*/*	*/*
	10	*/*	*/*	*/*	*/*	*/*	*/*	*/*	*/*	*/*	*/*	*/*
	15	*/*	*/*	*/*	*/*	*/*	*/*	*/*	*/*	*/*	*/*	*/*
	20	*/*	*/*	*/*	*/*	*/*	*/*	*/*	*/*	*/*	*/*	*/*
	25	*/*	*/*	*/*	*/*	*/*	*/*	*/*	*/*	*/*	*/*	*/*
	30	*/*	*/*	*/*	*/*	*/*	*/*	*/*	*/*	*/*	*/*	*/*
	35	*/*	*/*	*/*	*/*	*/*	*/*	*/*	*/*	*/*	*/*	*/*
	40	*/*	*/*	*/*	*/*	*/*	*/*	*/*	*/*	*/*	*/*	*/*
	45	*/*	*/*	*/*	*/*	*/*	*/*	*/*	*/*	*/*	*/*	*/*
	50	*/*	*/*	*/*	*/*	*/*	*/*	*/*	*/*	*/*	*/*	*/*
	55	*/*	*/*	*/*	*/*	*/*	*/*	*/*	*/*	*/*	*/*	*/*
	60	*/*	*/*	*/*	*/*	*/*	*/*	*/*	*/*	*/*	*/*	*/*
	70	*/*	*/*	*/*	*/*	*/*	*/*	*/*	*/*	*/*	*/*	*/*
	80	*/*	*/*	*/*	*/*	*/*	*/*	*/*	*/*	*/*	*/*	*/*
	90	*/*	*/*	*/*	*/*	*/*	*/*	*/*	*/*	*/*	*/*	*/*
	100	*/*	*/*	*/*	*/*	*/*	*/*	*/*	*/*	*/*	*/*	*/*
	110	*/*	*/*	*/*	*/*	*/*	*/*	*/*	*/*	*/*	*/*	*/*
	120	*/*	*/*	*/*	*/*	*/*	*/*	*/*	*/*	*/*	*/*	*/*
C	0	*/*	*/*	*/*	*/*	*/*	*/*	*/*	*/*	*/*	*/*	*/*
	5	*/*	*/*	*/*	*/*	*/*	*/*	*/*	*/*	*/*	*/*	*/*
	10	*/*	*/*	*/*	*/*	*/*	*/*	*/*	*/*	*/*	*/*	*/*
	15	*/*	*/*	*/*	*/*	*/*	*/*	*/*	*/*	*/*	*/*	*/*
	20	*/*	*/*	*/*	*/*	*/*	*/*	*/*	*/*	*/*	*/*	*/*
	25	*/*	*/*	*/*	*/*	*/*	*/*	*/*	*/*	*/*	*/*	*/*
	30	*/*	*/*	*/*	*/*	*/*	*/*	*/*	*/*	*/*	*/*	*/*
	35	*/*	*/*	*/*	*/*	*/*	*/*	*/*	*/*	*/*	*/*	*/*
	40	*/*	*/*	*/*	*/*	*/*	*/*	*/*	*/*	*/*	*/*	*/*
	45	*/*	*/*	*/*	*/*	*/*	*/*	*/*	*/*	*/*	*/*	*/*
	50	*/*	*/*	*/*	*/*	*/*	*/*	*/*	*/*	*/*	*/*	*/*
	55	*/*	*/*	*/*	*/*	*/*	*/*	*/*	*/*	*/*	*/*	*/*
	60	*/*	*/*	*/*	*/*	*/*	*/*	*/*	*/*	*/*	*/*	*/*
	70	*/*	*/*	*/*	*/*	*/*	*/*	*/*	*/*	*/*	*/*	*/*
	80	*/*	*/*	*/*	*/*	*/*	*/*	*/*	*/*	*/*	*/*	*/*
	90	*/*	*/*	*/*	*/*	*/*	*/*	*/*	*/*	*/*	*/*	*/*
	100	*/*	*/*	*/*	*/*	*/*	*/*	*/*	*/*	*/*	*/*	*/*
	110	*/*	*/*	*/*	*/*	*/*	*/*	*/*	*/*	*/*	*/*	*/*
	120	*/*	*/*	*/*	*/*	*/*	*/*	*/*	*/*	*/*	*/*	*/*
D	0	*/*	*/*	*/*	*/*	*/*	*/*	*/*	*/*	*/*	*/*	*/*
	5	*/*	*/*	*/*	*/*	*/*	*/*	*/*	*/*	*/*	*/*	*/*
	10	*/*	*/*	*/*	*/*	*/*	*/*	*/*	*/*	*/*	*/*	*/*
	15	*/*	*/*	*/*	*/*	*/*	*/*	*/*	*/*	*/*	*/*	*/*
	20	*/*	*/*	*/*	*/*	*/*	*/*	*/*	*/*	*/*	*/*	*/*
	25	*/*	*/*	*/*	*/*	*/*	*/*	*/*	*/*	*/*	*/*	*/*
	30	*/*	*/*	*/*	*/*	*/*	*/*	*/*	*/*	*/*	*/*	*/*
	35	*/*	*/*	*/*	*/*	*/*	*/*	*/*	*/*	*/*	*/*	*/*
	40	*/*	*/*	*/*	*/*	*/*	*/*	*/*	*/*	*/*	*/*	*/*
	45	*/*	*/*	*/*	*/*	*/*	*/*	*/*	*/*	*/*	*/*	*/*
	50	*/*	*/*	*/*	*/*	*/*	*/*	*/*	*/*	*/*	*/*	*/*
	55	*/*	*/*	*/*	*/*	*/*	*/*	*/*	*/*	*/*	*/*	*/*
	60	*/*	*/*	*/*	*/*	*/*	*/*	*/*	*/*	*/*	*/*	*/*
	70	*/*	*/*	*/*	*/*	*/*	*/*	*/*	*/*	*/*	*/*	*/*
	80	*/*	*/*	*/*	*/*	*/*	*/*	*/*	*/*	*/*	*/*	*/*
	90	*/*	*/*	*/*	*/*	*/*	*/*	*/*	*/*	*/*	*/*	*/*
	100	*/*	*/*	*/*	*/*	*/*	*/*	*/*	*/*	*/*	*/*	*/*
	110	*/*	*/*	*/*	*/*	*/*	*/*	*/*	*/*	*/*	*/*	*/*
	120	*/*	*/*	*/*	*/*	*/*	*/*	*/*	*/*	*/*	*/*	*/*

Notes – see page 92-94, and 95. Reference Table T19b for Roof Area 3 Spans.

T23c	Hip - Maximum Span (in) for Roof Slope 27° - 45° & Roof Area 3											H=15
Portrait		Wind Speed (mph)										
Exposure	Snow Load (psf)	100	105	110	115	120	130	140	150	160	170	180
B	0	96/96	96/96	96/96	96/96	96/96	96/96	92/87	84/80	77/73	71/68	66/63
	5	96/96	96/96	96/96	96/96	96/96	96/96	92/87	84/80	77/73	71/68	66/63
	10	95/87	95/87	95/87	95/87	95/87	95/87	92/87	84/80	77/73	71/68	66/63
	15	87/80	87/80	87/80	87/80	87/80	87/80	87/80	84/80	77/73	71/68	66/63
	20	81/74	81/74	81/74	81/74	81/74	81/74	81/74	81/74	77/73	71/68	66/63
	25	76/70	76/70	76/70	76/70	76/70	76/70	76/70	76/70	76/70	71/68	66/63
	30	71/66	71/66	71/66	71/66	71/66	71/66	71/66	71/66	71/66	71/66	66/63
	35	67/61	67/61	67/61	67/61	67/61	67/61	67/61	67/61	67/61	67/61	66/61
	40	63/58	63/58	63/58	63/58	63/58	63/58	63/58	63/58	63/58	63/58	63/58
	45	60/55	60/55	60/55	60/55	60/55	60/55	60/55	60/55	60/55	60/55	60/55
	50	57/52	57/52	57/52	57/52	57/52	57/52	57/52	57/52	57/52	57/52	57/52
	55	54/50	54/50	54/50	54/50	54/50	54/50	54/50	54/50	54/50	54/50	54/50
	60	52/48	52/48	52/48	52/48	52/48	52/48	52/48	52/48	52/48	52/48	52/48
	70	48/44	48/44	48/44	48/44	48/44	48/44	48/44	48/44	48/44	48/44	48/44
	80	45/41	45/41	45/41	45/41	45/41	45/41	45/41	45/41	45/41	45/41	45/41
	90	43/39	43/39	43/39	43/39	43/39	43/39	43/39	43/39	43/39	43/39	43/39
	100	40/37	40/37	40/37	40/37	40/37	40/37	40/37	40/37	40/37	40/37	40/37
	110	38/35	38/35	38/35	38/35	38/35	38/35	38/35	38/35	38/35	38/35	38/*
	120	37/34	37/34	37/34	37/34	37/34	37/34	37/34	37/34	37/34	37/34	37/*
C	0	96/96	96/96	96/93	92/88	87/83	79/74	71/67	65/62	60/57	55/52	51/48
	5	96/96	96/96	96/93	92/88	87/83	79/74	71/67	65/62	60/57	55/52	51/48
	10	95/87	95/87	95/87	92/87	87/83	79/74	71/67	65/62	60/57	55/52	51/48
	15	87/80	87/80	87/80	87/80	87/80	79/74	71/67	65/62	60/57	55/52	51/48
	20	81/74	81/74	81/74	81/74	81/74	79/74	71/67	65/62	60/57	55/52	51/*
	25	76/70	76/70	76/70	76/70	76/70	76/70	71/67	65/62	60/57	55/52	*/*
	30	71/66	71/66	71/66	71/66	71/66	71/66	71/66	65/62	60/57	55/*	*/*
	35	67/61	67/61	67/61	67/61	67/61	67/61	67/61	65/61	60/57	55/*	*/*
	40	63/58	63/58	63/58	63/58	63/58	63/58	63/58	63/58	60/57	55/*	*/*
	45	60/55	60/55	60/55	60/55	60/55	60/55	60/55	60/55	60/55	*/*	*/*
	50	57/52	57/52	57/52	57/52	57/52	57/52	57/52	57/52	57/52	*/*	*/*
	55	54/50	54/50	54/50	54/50	54/50	54/50	54/50	54/50	54/*	*/*	*/*
	60	52/48	52/48	52/48	52/48	52/48	52/48	52/48	52/48	52/*	*/*	*/*
	70	48/44	48/44	48/44	48/44	48/44	48/44	48/44	48/44	48/*	*/*	*/*
	80	45/41	45/41	45/41	45/41	45/41	45/41	45/41	45/41	*/*	*/*	*/*
	90	43/39	43/39	43/39	43/39	43/39	43/39	43/39	43/39	*/*	*/*	*/*
	100	40/37	40/37	40/37	40/37	40/37	40/37	40/37	40/*	*/*	*/*	*/*
	110	38/35	38/35	38/35	38/35	38/35	38/35	38/35	38/*	*/*	*/*	*/*
	120	37/34	37/34	37/34	37/34	37/34	37/34	37/34	37/*	*/*	*/*	*/*
D	0	96/93	91/87	86/82	81/77	77/73	69/65	63/59	57/54	53/50	49/46	*/*
	5	96/93	91/87	86/82	81/77	77/73	69/65	63/59	57/54	53/50	49/46	*/*
	10	95/87	91/87	86/82	81/77	77/73	69/65	63/59	57/54	53/50	49/46	*/*
	15	87/80	87/80	86/80	81/77	77/73	69/65	63/59	57/54	53/50	49/*	*/*
	20	81/74	81/74	81/74	81/74	77/73	69/65	63/59	57/54	53/50	*/*	*/*
	25	76/70	76/70	76/70	76/70	76/70	69/65	63/59	57/54	53/*	*/*	*/*
	30	71/66	71/66	71/66	71/66	71/66	69/65	63/59	57/54	*/*	*/*	*/*
	35	67/61	67/61	67/61	67/61	67/61	67/61	63/59	57/54	*/*	*/*	*/*
	40	63/58	63/58	63/58	63/58	63/58	63/58	63/58	57/*	*/*	*/*	*/*
	45	60/55	60/55	60/55	60/55	60/55	60/55	60/55	57/*	*/*	*/*	*/*
	50	57/52	57/52	57/52	57/52	57/52	57/52	57/52	57/*	*/*	*/*	*/*
	55	54/50	54/50	54/50	54/50	54/50	54/50	54/50	*/*	*/*	*/*	*/*
	60	52/48	52/48	52/48	52/48	52/48	52/48	52/48	*/*	*/*	*/*	*/*
	70	48/44	48/44	48/44	48/44	48/44	48/44	48/*	*/*	*/*	*/*	*/*
	80	45/41	45/41	45/41	45/41	45/41	45/41	45/*	*/*	*/*	*/*	*/*
	90	43/39	43/39	43/39	43/39	43/39	43/39	43/*	*/*	*/*	*/*	*/*
	100	40/37	40/37	40/37	40/37	40/37	40/37	40/*	*/*	*/*	*/*	*/*
	110	38/35	38/35	38/35	38/35	38/35	38/35	*/*	*/*	*/*	*/*	*/*
	120	37/34	37/34	37/34	37/34	37/34	37/34	*/*	*/*	*/*	*/*	*/*

Notes – see page 92-94, and 95

T24a	Hip - Maximum Span (in) for Roof Slope 7° - 20° & Roof Area 3											H=30
Portrait		Wind Speed (mph)										
Exposure	Snow Load (psf)	100	105	110	115	120	130	140	150	160	170	180
B	0	96/96	96/96	96/95	96/90	93/86	85/79	78/72	72/67	67/62	63/58	59/55
	5	96/96	96/96	96/95	96/90	93/86	85/79	78/72	72/67	67/62	63/58	59/55
	10	93/85	93/85	93/85	93/85	93/85	85/79	78/72	72/67	67/62	63/58	59/55
	15	83/77	83/77	83/77	83/77	83/77	83/77	78/72	72/67	67/62	63/58	59/55
	20	76/70	76/70	76/70	76/70	76/70	76/70	76/70	72/67	67/62	63/58	59/*
	25	72/66	72/66	72/66	72/66	72/66	72/66	72/66	72/66	67/62	63/58	59/*
	30	66/61	66/61	66/61	66/61	66/61	66/61	66/61	66/61	66/61	63/58	59/*
	35	62/57	62/57	62/57	62/57	62/57	62/57	62/57	62/57	62/57	62/57	59/*
	40	58/53	58/53	58/53	58/53	58/53	58/53	58/53	58/53	58/53	58/53	58/*
	45	55/50	55/50	55/50	55/50	55/50	55/50	55/50	55/50	55/50	55/50	55/*
	50	52/48	52/48	52/48	52/48	52/48	52/48	52/48	52/48	52/48	52/48	52/*
	55	50/46	50/46	50/46	50/46	50/46	50/46	50/46	50/46	50/46	50/46	50/*
	60	48/44	48/44	48/44	48/44	48/44	48/44	48/44	48/44	48/44	48/44	48/*
	70	44/41	44/41	44/41	44/41	44/41	44/41	44/41	44/41	44/41	44/41	*/*
	80	41/38	41/38	41/38	41/38	41/38	41/38	41/38	41/38	41/38	41/38	*/*
	90	39/36	39/36	39/36	39/36	39/36	39/36	39/36	39/36	39/36	39/*	*/*
	100	37/34	37/34	37/34	37/34	37/34	37/34	37/34	37/34	37/34	37/*	*/*
	110	35/32	35/32	35/32	35/32	35/32	35/32	35/32	35/32	35/32	35/*	*/*
	120	34/31	34/31	34/31	34/31	34/31	34/31	34/31	34/31	34/31	34/*	*/*
C	0	94/87	89/83	85/79	81/75	77/71	70/65	65/60	60/55	56/*	*/*	*/*
	5	94/87	89/83	85/79	81/75	77/71	70/65	65/60	60/55	56/*	*/*	*/*
	10	93/85	89/83	85/79	81/75	77/71	70/65	65/60	60/55	56/*	*/*	*/*
	15	83/77	83/77	83/77	81/75	77/71	70/65	65/60	60/55	56/*	*/*	*/*
	20	76/70	76/70	76/70	76/70	76/70	70/65	65/60	60/55	*/*	*/*	*/*
	25	72/66	72/66	72/66	72/66	72/66	70/65	65/60	60/55	*/*	*/*	*/*
	30	66/61	66/61	66/61	66/61	66/61	66/61	65/60	60/*	*/*	*/*	*/*
	35	62/57	62/57	62/57	62/57	62/57	62/57	62/57	60/*	*/*	*/*	*/*
	40	58/53	58/53	58/53	58/53	58/53	58/53	58/53	58/*	*/*	*/*	*/*
	45	55/50	55/50	55/50	55/50	55/50	55/50	55/50	55/*	*/*	*/*	*/*
	50	52/48	52/48	52/48	52/48	52/48	52/48	52/48	52/*	*/*	*/*	*/*
	55	50/46	50/46	50/46	50/46	50/46	50/46	50/46	50/*	*/*	*/*	*/*
	60	48/44	48/44	48/44	48/44	48/44	48/44	48/44	48/*	*/*	*/*	*/*
	70	44/41	44/41	44/41	44/41	44/41	44/41	44/41	44/*	*/*	*/*	*/*
	80	41/38	41/38	41/38	41/38	41/38	41/38	41/38	41/*	*/*	*/*	*/*
	90	39/36	39/36	39/36	39/36	39/36	39/36	39/36	39/*	*/*	*/*	*/*
	100	37/34	37/34	37/34	37/34	37/34	37/34	37/34	37/*	*/*	*/*	*/*
	110	35/32	35/32	35/32	35/32	35/32	35/32	35/32	35/*	*/*	*/*	*/*
	120	34/31	34/31	34/31	34/31	34/31	34/31	34/31	34/*	*/*	*/*	*/*
D	0	86/80	81/75	77/72	73/68	70/65	64/59	59/54	*/*	*/*	*/*	*/*
	5	86/80	81/75	77/72	73/68	70/65	64/59	59/54	*/*	*/*	*/*	*/*
	10	86/80	81/75	77/72	73/68	70/65	64/59	59/54	*/*	*/*	*/*	*/*
	15	83/77	81/75	77/72	73/68	70/65	64/59	59/54	*/*	*/*	*/*	*/*
	20	76/70	76/70	76/70	73/68	70/65	64/59	59/*	*/*	*/*	*/*	*/*
	25	72/66	72/66	72/66	72/66	70/65	64/59	59/*	*/*	*/*	*/*	*/*
	30	66/61	66/61	66/61	66/61	66/61	64/59	59/*	*/*	*/*	*/*	*/*
	35	62/57	62/57	62/57	62/57	62/57	62/57	59/*	*/*	*/*	*/*	*/*
	40	58/53	58/53	58/53	58/53	58/53	58/53	58/*	*/*	*/*	*/*	*/*
	45	55/50	55/50	55/50	55/50	55/50	55/50	55/*	*/*	*/*	*/*	*/*
	50	52/48	52/48	52/48	52/48	52/48	52/48	52/*	*/*	*/*	*/*	*/*
	55	50/46	50/46	50/46	50/46	50/46	50/46	50/*	*/*	*/*	*/*	*/*
	60	48/44	48/44	48/44	48/44	48/44	48/44	48/*	*/*	*/*	*/*	*/*
	70	44/41	44/41	44/41	44/41	44/41	44/41	*/*	*/*	*/*	*/*	*/*
	80	41/38	41/38	41/38	41/38	41/38	41/38	*/*	*/*	*/*	*/*	*/*
	90	39/36	39/36	39/36	39/36	39/36	39/36	*/*	*/*	*/*	*/*	*/*
	100	37/34	37/34	37/34	37/34	37/34	37/34	*/*	*/*	*/*	*/*	*/*
	110	35/32	35/32	35/32	35/32	35/32	35/32	*/*	*/*	*/*	*/*	*/*
	120	34/31	34/31	34/31	34/31	34/31	34/31	*/*	*/*	*/*	*/*	*/*

Notes – see page 92-94, and 95

T24b	Hip - Maximum Span (in) for Roof Slope 20° - 27° & Roof Area 3											H=30
Portrait		Wind Speed (mph)										
Exposure	Snow Load (psf)	100	105	110	115	120	130	140	150	160	170	180
B	0	*/*	*/*	*/*	*/*	*/*	*/*	*/*	*/*	*/*	*/*	*/*
	5	*/*	*/*	*/*	*/*	*/*	*/*	*/*	*/*	*/*	*/*	*/*
	10	*/*	*/*	*/*	*/*	*/*	*/*	*/*	*/*	*/*	*/*	*/*
	15	*/*	*/*	*/*	*/*	*/*	*/*	*/*	*/*	*/*	*/*	*/*
	20	*/*	*/*	*/*	*/*	*/*	*/*	*/*	*/*	*/*	*/*	*/*
	25	*/*	*/*	*/*	*/*	*/*	*/*	*/*	*/*	*/*	*/*	*/*
	30	*/*	*/*	*/*	*/*	*/*	*/*	*/*	*/*	*/*	*/*	*/*
	35	*/*	*/*	*/*	*/*	*/*	*/*	*/*	*/*	*/*	*/*	*/*
	40	*/*	*/*	*/*	*/*	*/*	*/*	*/*	*/*	*/*	*/*	*/*
	45	*/*	*/*	*/*	*/*	*/*	*/*	*/*	*/*	*/*	*/*	*/*
	50	*/*	*/*	*/*	*/*	*/*	*/*	*/*	*/*	*/*	*/*	*/*
	55	*/*	*/*	*/*	*/*	*/*	*/*	*/*	*/*	*/*	*/*	*/*
	60	*/*	*/*	*/*	*/*	*/*	*/*	*/*	*/*	*/*	*/*	*/*
	70	*/*	*/*	*/*	*/*	*/*	*/*	*/*	*/*	*/*	*/*	*/*
	80	*/*	*/*	*/*	*/*	*/*	*/*	*/*	*/*	*/*	*/*	*/*
	90	*/*	*/*	*/*	*/*	*/*	*/*	*/*	*/*	*/*	*/*	*/*
	100	*/*	*/*	*/*	*/*	*/*	*/*	*/*	*/*	*/*	*/*	*/*
	110	*/*	*/*	*/*	*/*	*/*	*/*	*/*	*/*	*/*	*/*	*/*
	120	*/*	*/*	*/*	*/*	*/*	*/*	*/*	*/*	*/*	*/*	*/*
C	0	*/*	*/*	*/*	*/*	*/*	*/*	*/*	*/*	*/*	*/*	*/*
	5	*/*	*/*	*/*	*/*	*/*	*/*	*/*	*/*	*/*	*/*	*/*
	10	*/*	*/*	*/*	*/*	*/*	*/*	*/*	*/*	*/*	*/*	*/*
	15	*/*	*/*	*/*	*/*	*/*	*/*	*/*	*/*	*/*	*/*	*/*
	20	*/*	*/*	*/*	*/*	*/*	*/*	*/*	*/*	*/*	*/*	*/*
	25	*/*	*/*	*/*	*/*	*/*	*/*	*/*	*/*	*/*	*/*	*/*
	30	*/*	*/*	*/*	*/*	*/*	*/*	*/*	*/*	*/*	*/*	*/*
	35	*/*	*/*	*/*	*/*	*/*	*/*	*/*	*/*	*/*	*/*	*/*
	40	*/*	*/*	*/*	*/*	*/*	*/*	*/*	*/*	*/*	*/*	*/*
	45	*/*	*/*	*/*	*/*	*/*	*/*	*/*	*/*	*/*	*/*	*/*
	50	*/*	*/*	*/*	*/*	*/*	*/*	*/*	*/*	*/*	*/*	*/*
	55	*/*	*/*	*/*	*/*	*/*	*/*	*/*	*/*	*/*	*/*	*/*
	60	*/*	*/*	*/*	*/*	*/*	*/*	*/*	*/*	*/*	*/*	*/*
	70	*/*	*/*	*/*	*/*	*/*	*/*	*/*	*/*	*/*	*/*	*/*
	80	*/*	*/*	*/*	*/*	*/*	*/*	*/*	*/*	*/*	*/*	*/*
	90	*/*	*/*	*/*	*/*	*/*	*/*	*/*	*/*	*/*	*/*	*/*
	100	*/*	*/*	*/*	*/*	*/*	*/*	*/*	*/*	*/*	*/*	*/*
	110	*/*	*/*	*/*	*/*	*/*	*/*	*/*	*/*	*/*	*/*	*/*
	120	*/*	*/*	*/*	*/*	*/*	*/*	*/*	*/*	*/*	*/*	*/*
D	0	*/*	*/*	*/*	*/*	*/*	*/*	*/*	*/*	*/*	*/*	*/*
	5	*/*	*/*	*/*	*/*	*/*	*/*	*/*	*/*	*/*	*/*	*/*
	10	*/*	*/*	*/*	*/*	*/*	*/*	*/*	*/*	*/*	*/*	*/*
	15	*/*	*/*	*/*	*/*	*/*	*/*	*/*	*/*	*/*	*/*	*/*
	20	*/*	*/*	*/*	*/*	*/*	*/*	*/*	*/*	*/*	*/*	*/*
	25	*/*	*/*	*/*	*/*	*/*	*/*	*/*	*/*	*/*	*/*	*/*
	30	*/*	*/*	*/*	*/*	*/*	*/*	*/*	*/*	*/*	*/*	*/*
	35	*/*	*/*	*/*	*/*	*/*	*/*	*/*	*/*	*/*	*/*	*/*
	40	*/*	*/*	*/*	*/*	*/*	*/*	*/*	*/*	*/*	*/*	*/*
	45	*/*	*/*	*/*	*/*	*/*	*/*	*/*	*/*	*/*	*/*	*/*
	50	*/*	*/*	*/*	*/*	*/*	*/*	*/*	*/*	*/*	*/*	*/*
	55	*/*	*/*	*/*	*/*	*/*	*/*	*/*	*/*	*/*	*/*	*/*
	60	*/*	*/*	*/*	*/*	*/*	*/*	*/*	*/*	*/*	*/*	*/*
	70	*/*	*/*	*/*	*/*	*/*	*/*	*/*	*/*	*/*	*/*	*/*
	80	*/*	*/*	*/*	*/*	*/*	*/*	*/*	*/*	*/*	*/*	*/*
	90	*/*	*/*	*/*	*/*	*/*	*/*	*/*	*/*	*/*	*/*	*/*
	100	*/*	*/*	*/*	*/*	*/*	*/*	*/*	*/*	*/*	*/*	*/*
	110	*/*	*/*	*/*	*/*	*/*	*/*	*/*	*/*	*/*	*/*	*/*
	120	*/*	*/*	*/*	*/*	*/*	*/*	*/*	*/*	*/*	*/*	*/*

Notes – see page 92-94, and 95. Reference Table T20b for Roof Area 3 Spans.

T24c	Hip - Maximum Span (in) for Roof Slope 27° - 45° & Roof Area 3											H=30
Portrait		Wind Speed (mph)										
Exposure	Snow Load (psf)	100	105	110	115	120	130	140	150	160	170	180
B	0	96/96	96/96	96/96	96/96	96/94	89/85	81/77	74/70	68/64	63/59	58/55
	5	96/96	96/96	96/96	96/96	96/94	89/85	81/77	74/70	68/64	63/59	58/55
	10	95/87	95/87	95/87	95/87	95/87	89/85	81/77	74/70	68/64	63/59	58/55
	15	87/80	87/80	87/80	87/80	87/80	87/80	81/77	74/70	68/64	63/59	58/55
	20	81/74	81/74	81/74	81/74	81/74	81/74	81/74	74/70	68/64	63/59	58/55
	25	76/70	76/70	76/70	76/70	76/70	76/70	76/70	74/70	68/64	63/59	58/55
	30	71/66	71/66	71/66	71/66	71/66	71/66	71/66	71/66	68/64	63/59	58/55
	35	67/61	67/61	67/61	67/61	67/61	67/61	67/61	67/61	67/61	63/59	58/55
	40	63/58	63/58	63/58	63/58	63/58	63/58	63/58	63/58	63/58	63/58	58/55
	45	60/55	60/55	60/55	60/55	60/55	60/55	60/55	60/55	60/55	60/55	58/*
	50	57/52	57/52	57/52	57/52	57/52	57/52	57/52	57/52	57/52	57/52	57/*
	55	54/50	54/50	54/50	54/50	54/50	54/50	54/50	54/50	54/50	54/50	54/*
	60	52/48	52/48	52/48	52/48	52/48	52/48	52/48	52/48	52/48	52/48	*/*
	70	48/44	48/44	48/44	48/44	48/44	48/44	48/44	48/44	48/44	48/*	*/*
	80	45/41	45/41	45/41	45/41	45/41	45/41	45/41	45/41	45/41	45/*	*/*
	90	43/39	43/39	43/39	43/39	43/39	43/39	43/39	43/39	43/39	43/*	*/*
	100	40/37	40/37	40/37	40/37	40/37	40/37	40/37	40/37	40/37	40/*	*/*
	110	38/35	38/35	38/35	38/35	38/35	38/35	38/35	38/35	38/35	*/*	*/*
	120	37/34	37/34	37/34	37/34	37/34	37/34	37/34	37/34	37/34	*/*	*/*
C	0	96/96	94/90	89/84	84/80	79/75	71/68	65/61	59/56	55/51	50/47	*/*
	5	96/96	94/90	89/84	84/80	79/75	71/68	65/61	59/56	55/51	50/47	*/*
	10	95/87	94/87	89/84	84/80	79/75	71/68	65/61	59/56	55/51	50/47	*/*
	15	87/80	87/80	87/80	84/80	79/75	71/68	65/61	59/56	55/51	50/47	*/*
	20	81/74	81/74	81/74	81/74	79/74	71/68	65/61	59/56	55/51	50/*	*/*
	25	76/70	76/70	76/70	76/70	76/70	71/68	65/61	59/56	55/51	*/*	*/*
	30	71/66	71/66	71/66	71/66	71/66	71/66	65/61	59/56	55/*	*/*	*/*
	35	67/61	67/61	67/61	67/61	67/61	67/61	65/61	59/56	55/*	*/*	*/*
	40	63/58	63/58	63/58	63/58	63/58	63/58	63/58	59/56	*/*	*/*	*/*
	45	60/55	60/55	60/55	60/55	60/55	60/55	60/55	59/55	*/*	*/*	*/*
	50	57/52	57/52	57/52	57/52	57/52	57/52	57/52	57/*	*/*	*/*	*/*
	55	54/50	54/50	54/50	54/50	54/50	54/50	54/50	54/*	*/*	*/*	*/*
	60	52/48	52/48	52/48	52/48	52/48	52/48	52/48	52/*	*/*	*/*	*/*
	70	48/44	48/44	48/44	48/44	48/44	48/44	48/44	*/*	*/*	*/*	*/*
	80	45/41	45/41	45/41	45/41	45/41	45/41	45/41	*/*	*/*	*/*	*/*
	90	43/39	43/39	43/39	43/39	43/39	43/39	43/*	*/*	*/*	*/*	*/*
	100	40/37	40/37	40/37	40/37	40/37	40/37	40/*	*/*	*/*	*/*	*/*
	110	38/35	38/35	38/35	38/35	38/35	38/35	38/*	*/*	*/*	*/*	*/*
	120	37/34	37/34	37/34	37/34	37/34	37/34	37/*	*/*	*/*	*/*	*/*
D	0	90/86	85/80	80/75	75/71	71/67	64/60	58/55	53/50	49/46	*/*	*/*
	5	90/86	85/80	80/75	75/71	71/67	64/60	58/55	53/50	49/46	*/*	*/*
	10	90/86	85/80	80/75	75/71	71/67	64/60	58/55	53/50	49/46	*/*	*/*
	15	87/80	85/80	80/75	75/71	71/67	64/60	58/55	53/50	49/*	*/*	*/*
	20	81/74	81/74	80/74	75/71	71/67	64/60	58/55	53/50	*/*	*/*	*/*
	25	76/70	76/70	76/70	75/70	71/67	64/60	58/55	53/*	*/*	*/*	*/*
	30	71/66	71/66	71/66	71/66	71/66	64/60	58/55	53/*	*/*	*/*	*/*
	35	67/61	67/61	67/61	67/61	67/61	64/60	58/55	*/*	*/*	*/*	*/*
	40	63/58	63/58	63/58	63/58	63/58	63/58	58/55	*/*	*/*	*/*	*/*
	45	60/55	60/55	60/55	60/55	60/55	60/55	58/*	*/*	*/*	*/*	*/*
	50	57/52	57/52	57/52	57/52	57/52	57/52	57/*	*/*	*/*	*/*	*/*
	55	54/50	54/50	54/50	54/50	54/50	54/50	54/*	*/*	*/*	*/*	*/*
	60	52/48	52/48	52/48	52/48	52/48	52/48	*/*	*/*	*/*	*/*	*/*
	70	48/44	48/44	48/44	48/44	48/44	48/44	*/*	*/*	*/*	*/*	*/*
	80	45/41	45/41	45/41	45/41	45/41	45/*	*/*	*/*	*/*	*/*	*/*
	90	43/39	43/39	43/39	43/39	43/39	43/*	*/*	*/*	*/*	*/*	*/*
	100	40/37	40/37	40/37	40/37	40/37	40/*	*/*	*/*	*/*	*/*	*/*
	110	38/35	38/35	38/35	38/35	38/35	38/*	*/*	*/*	*/*	*/*	*/*
	120	37/34	37/34	37/34	37/34	37/34	37/*	*/*	*/*	*/*	*/*	*/*

Notes – see page 92-94, and 95

Hip Roof - Roof Area Conversion

Enclosed Buildings—Hip Roofs, 7° < θ ≤ 20° (Roof)

Roof Area Per Tables	Roof Zone Per ASCE 7-16
1	1
2	2r
3	2e, 3

Diagrams

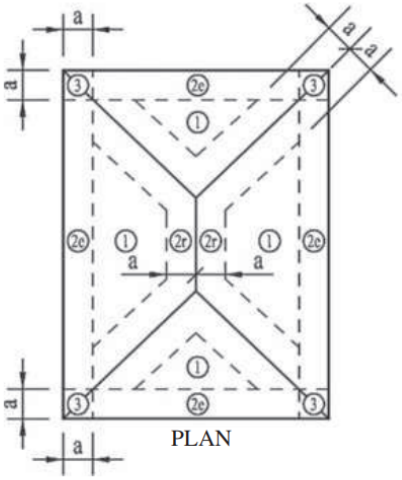

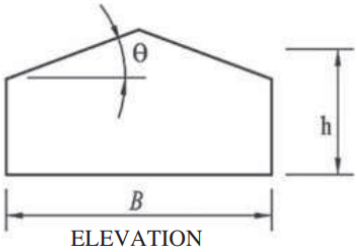

Notation

a = 10% of least horizontal dimension or 0.4h, whichever is smaller, but not less than either 4% of least horizontal dimension or 3 ft (0.9 m). If an overhang exists, the edge distance shall be measured from the outside edge of the overhang. The horizontal dimensions used to compute the edge distance shall not include any overhang distances.

h = Mean roof height, in ft (m), except that eave height shall be used for θ ≤ 10°.

B = Horizontal dimension of building measured normal to wind direction, in ft (m).

θ = Angle of plane of roof from horizontal, in degrees.

Hip Roof - Roof Area Conversion (cont'd)

Enclosed Buildings—Hip Roofs, 20° < θ ≤ 27° (Roof and Overhang)

Roof Area Per Tables	Roof Zone Per ASCE 7-16
1	1
2	2e, 2r, 3
3	NA

Diagrams

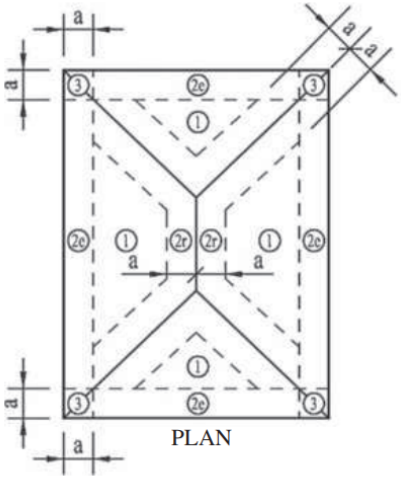

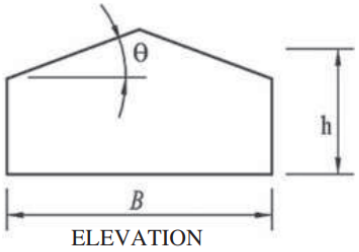

Notation

a = 10% of least horizontal dimension or 0.4*h*, whichever is smaller, but not less than either 4% of least horizontal dimension or 3 ft (0.9 m). If an overhang exists, the edge distance shall be measured from the outside edge of the overhang. The horizontal dimensions used to compute the edge distance shall not include any overhang distances.

h = Mean roof height, in ft (m), except that eave height shall be used for θ ≤ 10°.

B = Horizontal dimension of building measured normal to wind direction, in ft (m).

θ = Angle of plane of roof from horizontal, in degrees.

Hip Roof - Roof Area Conversion (cont'd)

Enclosed Buildings—Hip Roofs, 27° < θ ≤ 45° (Roof)

Diagrams

Roof Area Per Tables	Roof Zone Per ASCE 7-16
1	1
2	2e, 2r
3	3

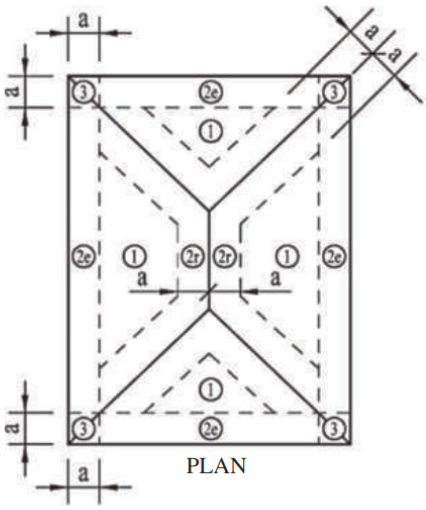

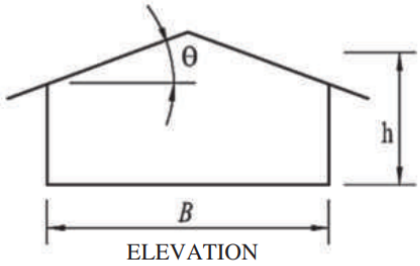

Notation

a = 10% of least horizontal dimension or 0.4h, whichever is smaller, but not less than either 4% of least horizontal dimension or 3 ft (0.9 m). If an overhang exists, the edge distance shall be measured from the outside edge of the overhang. The horizontal dimensions used to compute the edge distance shall not include any overhang distances.

B = Horizontal dimension of building measured normal to wind direction, in ft (m).

h = Mean roof height, in ft (m).

θ = Angle of plane of roof from horizontal, in degrees.

Design Considerations – Tabulated values are based on the following criteria:

1. Risk Category II
2. Maximum solar module dimension 68.0 inches x 42 inches (60-cell module) and 80.0 inches x 40.0inches (72-cell module).
3. Provide 2 in. clear between roof and rail
4. End cantilever span (max) = 0.40 x maximum span from above tables.
5. No rail splices in cantilever or outer 2/3 of end spans.
6. Single simple span(s). Spans listed in the tables above may be multiplied by 1.08 for continuous rails of 3 or more spans.
7. Rails and modulus shall be located a minimum of 2*[the Height Above the Roof Surface] from the roof edge, hip ridge, or gable ridge. (Maximum Height Above Roof Surface = 10in)
8. Rails and modules shall not be installed in shaded regions in the above tables.
9. Connection of the rail to the roof structure is the responsibility of the end user and is excluded from this letter. SML takes no liability for connections of the rail to the roof by others.

Our analysis assumes that the rails, including the connections and associated hardware, are installed in a workmanlike manner in accordance with the "Tamarack Flush Mount Installation Manual" and generally accepted standards of construction practice. Additional information is available at the Tamarack web site, tamaracksolar.com. Verification of PV Module capacity to support the loads associated with the given array shall be the responsibility of the Contractor or Owner and not Tamarack or Starling Madison Lofquist.

The adequacy of the supporting roof framing is to be determined by others.

Please feel free to contact me at your convenience if you have any questions.

"Professional Certification. I hereby certify that this plan, specification, or report was prepared by me or under my direct supervision and that I am duly Licensed Professional Engineer under the laws of the State of Minnesota".

Respectfully yours,

Tres J Warner

Digitally signed by Tres J Warner
DN: C=US, O=Starling Madison Lofquist Inc, dnQualifier=A01410C0000017BAC45E77500006C4C, CN=Tres J Warner
Reason: I am the author of this document
Location: your signing location here
Date: 2022-06-30 14:25:14
Foxit PhantomPDF Version: 9.7.5

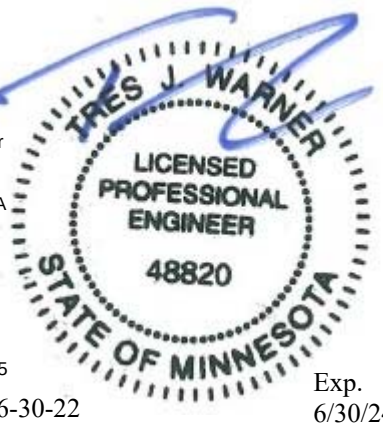

Tres J. Warner, P.E.
Design Division Manager

6-30-22

Exp. 6/30/24

TAMARACK SOLAR PRODUCTS

FLUSH MOUNT

SOLAR MOUNTING SYSTEM

SHOWING SYSTEM RAILS, SPLICES
MOUNTS, 5050 MODULE CLAMPS (WORK IN MID OR END CONDITION),
AND CHANNEL END CLAMPS.

SHOWN WITH L FOOT MOUNT, BUT MOUNT CAN BE INTERCHANGED WITH MOST TYPICAL MOUNTS ON THE MARKET WITH A VERTICAL LEVELING SLOT INCLUDING TILE ROOF HOOKS.

TORQUE ALL FASTENERS TO 12 FT-LBS

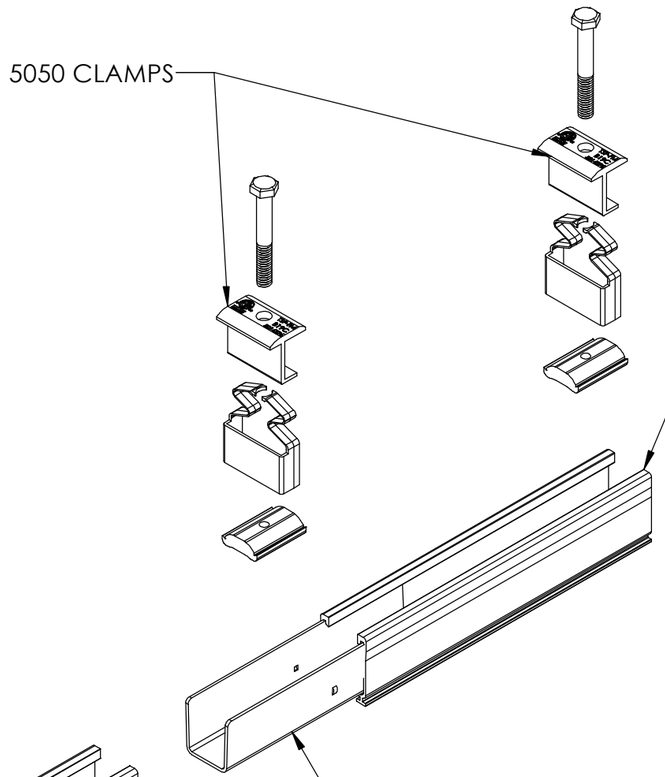

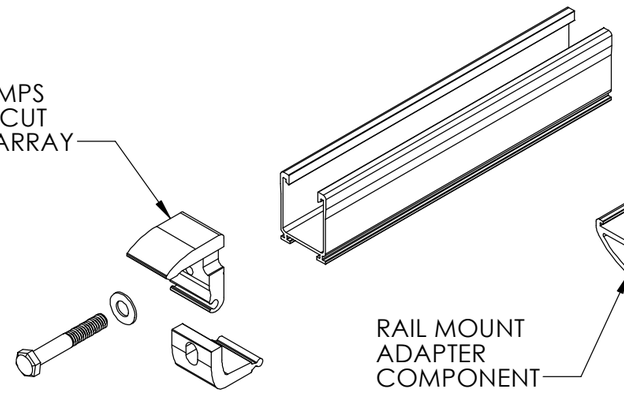

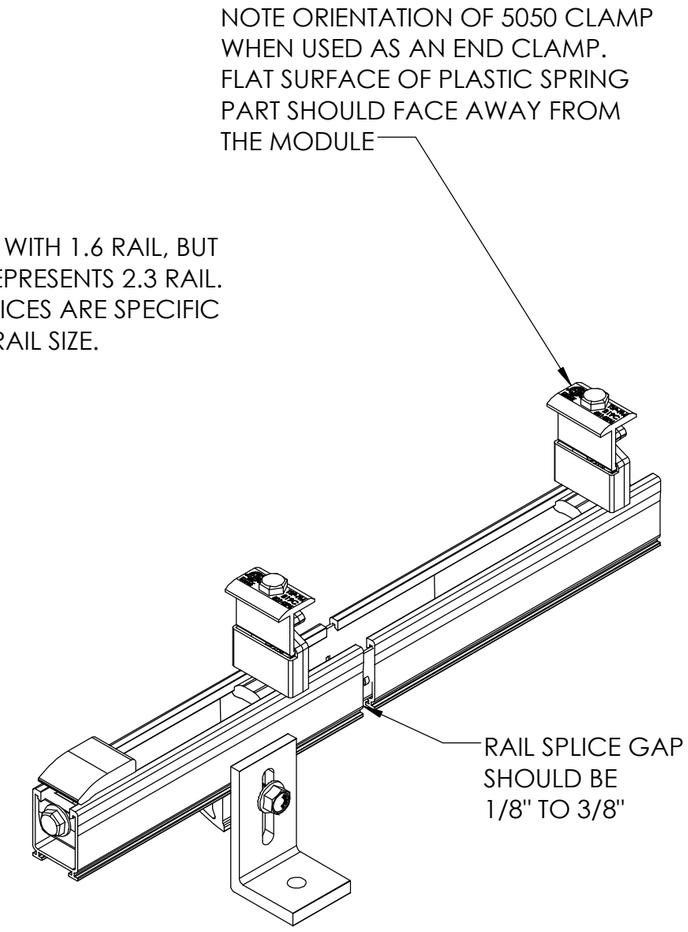

PROPRIETARY AND CONFIDENTIAL

THE INFORMATION CONTAINED IN THIS DRAWING IS THE SOLE PROPERTY OF <INSERT COMPANY NAME HERE>. ANY REPRODUCTION IN PART OR AS A WHOLE WITHOUT THE WRITTEN PERMISSION OF <INSERT COMPANY NAME HERE> IS PROHIBITED.

		UNLESS OTHERWISE SPECIFIED:		NAME	DATE
		DIMENSIONS ARE IN INCHES TOLERANCES: FRACTIONAL ± ANGULAR: MACH ± BEND ± TWO PLACE DECIMAL ± THREE PLACE DECIMAL ±	DRAWN	JW	04/19
			CHECKED	DK	04/19
			ENG APPR.		
			MFG APPR.		
		INTERPRET GEOMETRIC TOLERANCING PER:	Q.A.		
		MATERIAL	COMMENTS:		
NEXT ASSY	USED ON	FINISH			
APPLICATION		DO NOT SCALE DRAWING			

TITLE:

System Components Detail

SIZE	DWG. NO.	REV
B	FM-D01	

SCALE: 1:4 | WEIGHT: | SHEET 1 OF 1

TAMARACK SOLAR PRODUCTS

FLUSH MOUNT
SOLAR MOUNTING SYSTEM

SHOWING TYPICAL ROOF LAYOUT WITH SPANS AND OVERHANGS

SHOWN WITH L FOOT MOUNT, BUT MOUNT CAN BE INTERCHANGED WITH MOST TYPICAL MOUNTS ON THE MARKET WITH A VERTICAL LEVELING SLOT INCLUDING TILE ROOF HOOKS.

TORQUE ALL FASTENERS TO 12 FT-LBS

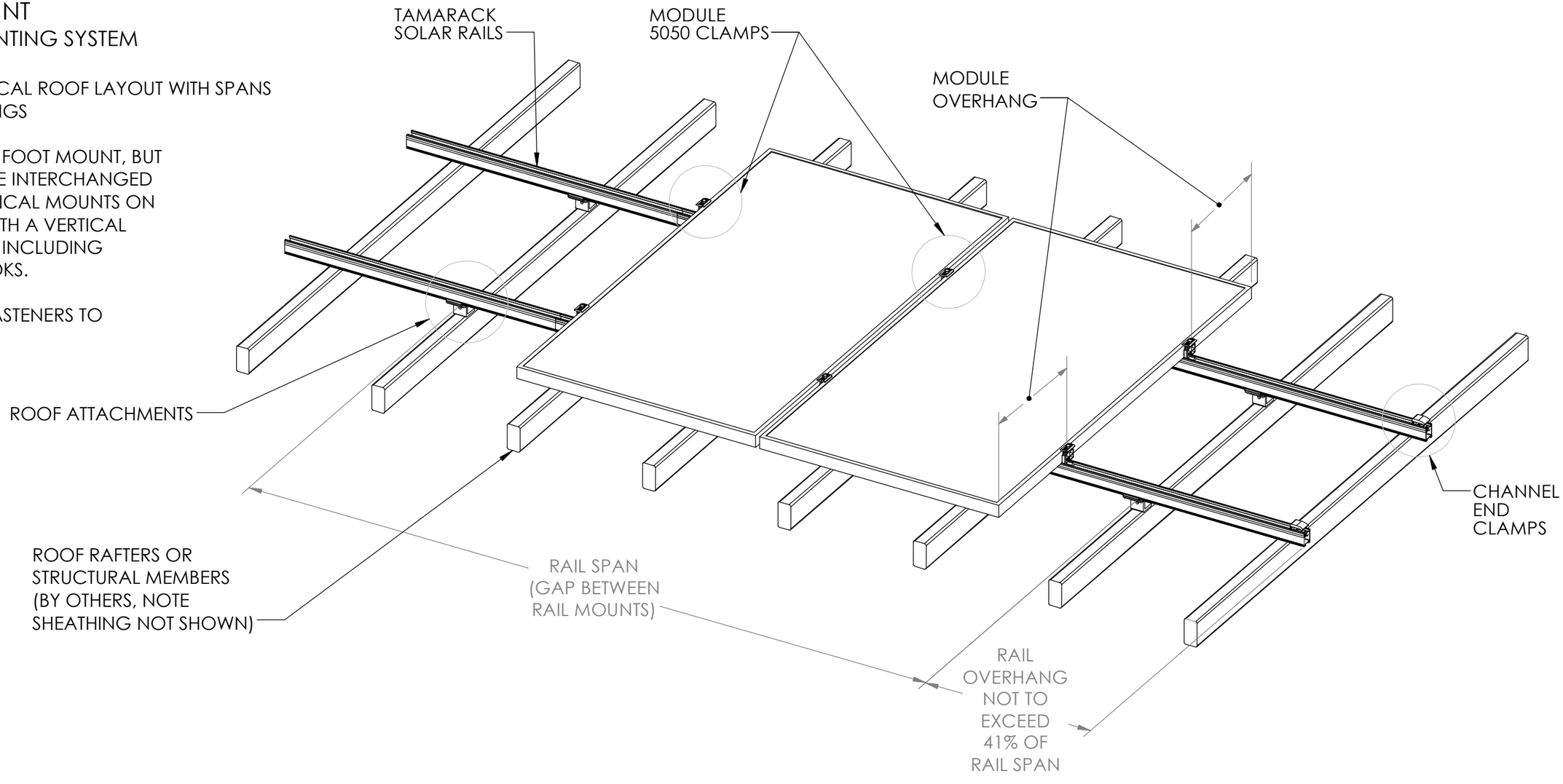

PROPRIETARY AND CONFIDENTIAL

THE INFORMATION CONTAINED IN THIS DRAWING IS THE SOLE PROPERTY OF <INSERT COMPANY NAME HERE>. ANY REPRODUCTION IN PART OR AS A WHOLE WITHOUT THE WRITTEN PERMISSION OF <INSERT COMPANY NAME HERE> IS PROHIBITED.

NEXT ASSY	USED ON	
APPLICATION		DO NOT SCALE DRAWING

UNLESS OTHERWISE SPECIFIED:

DIMENSIONS ARE IN INCHES
TOLERANCES:
FRACTIONAL ±
ANGULAR: MACH ± BEND ±
TWO PLACE DECIMAL ±
THREE PLACE DECIMAL ±

INTERPRET GEOMETRIC TOLERANCING PER:

MATERIAL

FINISH

	NAME	DATE
DRAWN	JW	04/19
CHECKED	DK	04/19
ENG APPR.		
MFG APPR.		
Q.A.		

COMMENTS:

TITLE:

System Layout Detail

SIZE	DWG. NO.	REV
B	FM-D02	

SCALE: 1:4 | WEIGHT: | SHEET 1 OF 1

TAMARACK SOLAR PRODUCTS

FLUSH MOUNT
SOLAR MOUNTING SYSTEM

MODULE CLAMP DETAILS

5050 CLAMPS CAN BE INSTALLED IN EITHER MID OR END CLAMP CONDITIONS AS SHOWN. HALF INCH MODULE GAP. IN END CONDITION OPEN SIDE OF PLASTIC SPRING SHOULD FACE IN TO THE MODULE AS SHOWN

CHANNEL END CLAMPS INSTALL IN THE RAIL CHANNEL AND ALLOW THE MODULE FRAMES TO BE FLUSH TO THE END OF THE MOUNTING RAILS

TORQUE ALL FASTENERS TO 12 FT-LBS

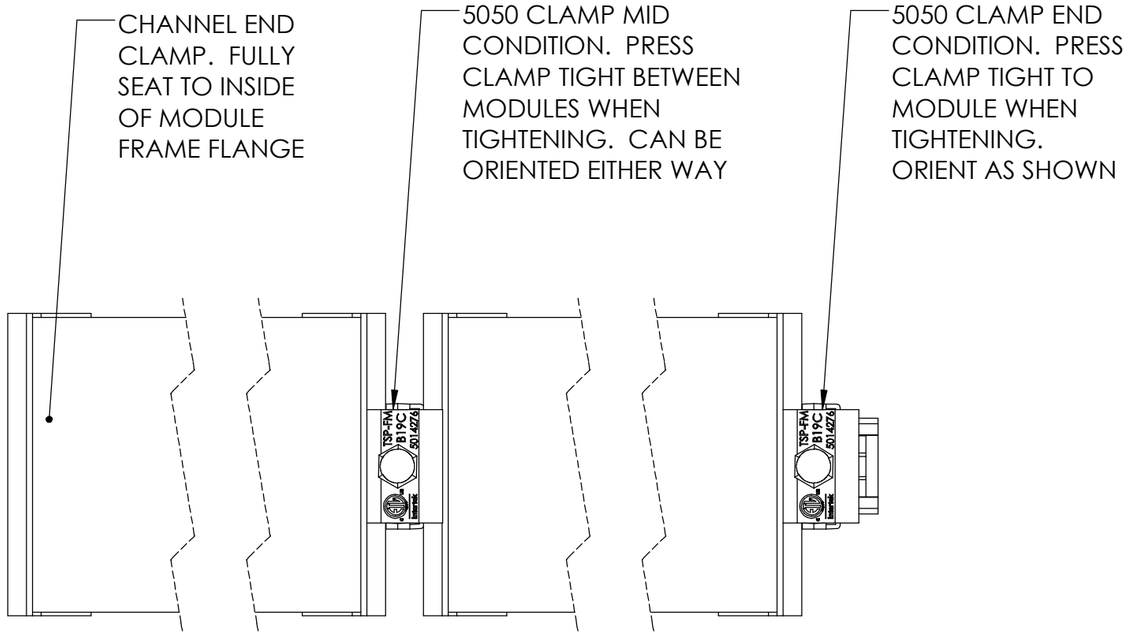

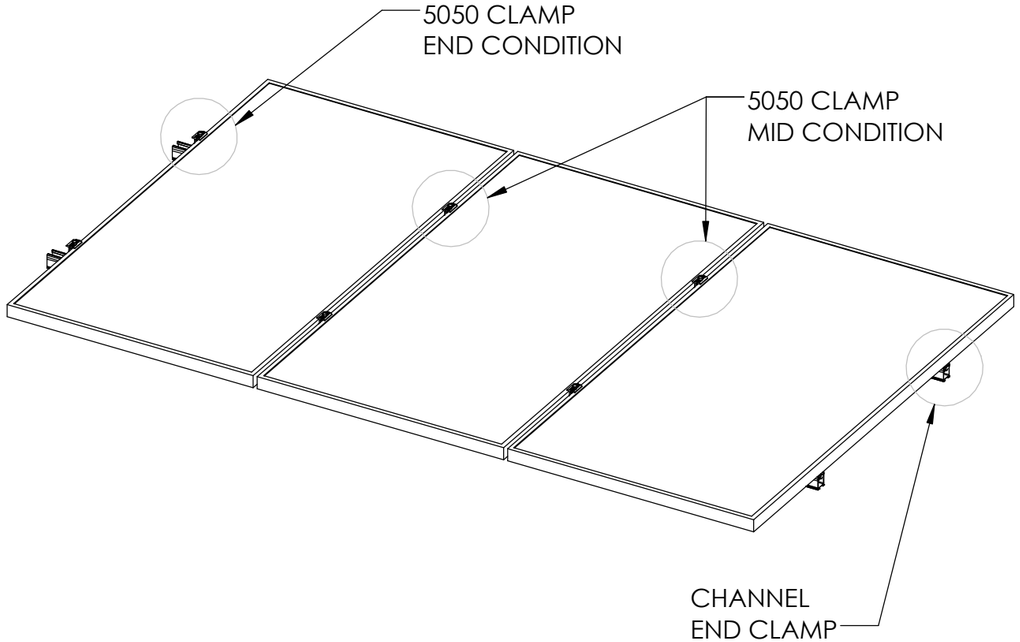

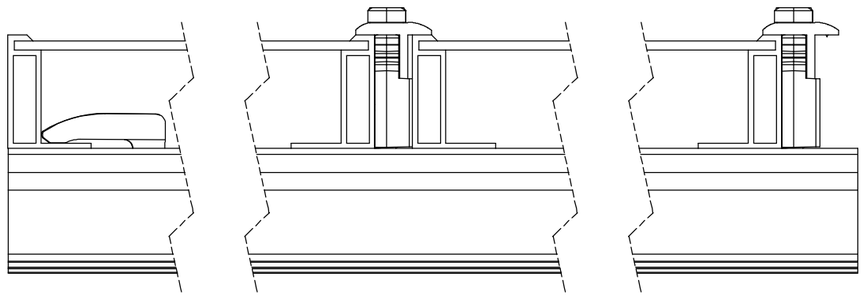

PROPRIETARY AND CONFIDENTIAL

THE INFORMATION CONTAINED IN THIS DRAWING IS THE SOLE PROPERTY OF <INSERT COMPANY NAME HERE>. ANY REPRODUCTION IN PART OR AS A WHOLE WITHOUT THE WRITTEN PERMISSION OF <INSERT COMPANY NAME HERE> IS PROHIBITED.

		UNLESS OTHERWISE SPECIFIED:
		DIMENSIONS ARE IN INCHES TOLERANCES: FRACTIONAL ± ANGULAR: MACH ± BEND ± TWO PLACE DECIMAL ± THREE PLACE DECIMAL ±
		INTERPRET GEOMETRIC TOLERANCING PER:
		MATERIAL
NEXT ASSY	USED ON	FINISH
APPLICATION		DO NOT SCALE DRAWING

	NAME	DATE
DRAWN	JW	04/19
CHECKED	DK	04/19
ENG APPR.		
MFG APPR.		
Q.A.		
COMMENTS:		

TITLE:

Module Clamp Detail

SIZE	DWG. NO.	REV
B	FM-D03	

SCALE: 1:4 | WEIGHT: | SHEET 1 OF 1