Starling Madison Lofquist, Inc.
Consulting Structural and Forensic Engineers
5224 South 39th Street, Phoenix, Arizona 85040
tel: (602) 438-2500 fax: (602) 438-2505 ROC#291316 www.smleng.com

Tamarack Solar
288 F Street
Arcata, CA 95521

May 12, 2020

Attn: Mr. David Katz

Subject: Tamarack 3.13 Rail, Ground Mounting System – 4 Module – Structural Analysis

Dear Sir:

We have analyzed the Tamarack 3.13 Rail for the subject solar module support system and determined that, for the configurations and criteria described below, it is in compliance with the applicable sections of the following Reference Documents:

Codes: ASCE/SEI 7-16 Min. Design Loads for Buildings & Other Structures
International Building Code 2018 Edition
Other: AC428, Acceptance Criteria for Modular Framing Systems Used to Support PV Modules, dated Effective November 1, 2012 by ICC-ES
Aluminum Design Manual, 2015 Edition (ADM)
Exhibit GM-4M3R

The Tamarack 3.13 Rail is an extruded aluminum section with an overall depth of 3.13 in. and a net area of 0.797sq.in. The rails are used to support solar PV modules where the modules are attached to the rails by the Tamarack mounting clamps. The rails are mounted to a simple pipe beam and pipe column structure which utilizes 2 inch ASTM A53 Grade B standard weight (schedule 40) steel pipes (O.D. = 2.83in & Wall Thickness = 0.154in). The pipe columns (posts) are connected in the East-West direction by the pipe beams (cross pipe) which cantilever over and past the end piers. The 3.13 Rails span across the cross pipes and connect the structure in the North-South direction (along the slope) and are attached to the cross pipes using the Tamarack Pipe Mount Assembly. Please refer to Exhibit GM-4M3R for the array geometry and approved material properties for all associated hardware and the structural pipe.

The structure is either considered a cantilever system or a braced framed system when diagonal braces are provided for lateral loads. For the transfer of gravity loads, the posts and foundations receive the load through the rails and cross pipes which act as simple beams. The effect of seismic loads for all design categories A-F have been determined to be less than the effect due to wind loads in all load conditions and combinations.

Therefore, the maximum allowable East-West spans for common load cases are shown in the tables below. The tables take into consideration the slope, wind load, and snow load for the structural design of the system and the spans are either governed by the capacity of the cross pipes or the capacity of the post.

The user of this certification letter shall obtain the following criteria to utilize Tables S1-S6 and F1-F12:

- Wind Speed
- Ground Snow Load
- Exposure Category
- Soil Classification (Soil Class 3 or Soil Class 4)

The wind speed, ground snow load, and exposure category may be obtained from the Authority Having Jurisdiction (AJH) in their local area. The AHJ may be the local building department, county building department, or government entity responsible for planning and development. Once all the design criteria has been selected, the user shall submit the first 4 pages of this document, along with the appropriate Table corresponding to the design criteria above, and Exhibits to the AHJ as part of the permit application.

Table of Contents

Item	Page
Design Assumptions	3 – 4
Span Tables S1-S3 (Unbraced System)	5 – 7
Span Tables S4-S6 (Braced System)	8 – 10
Foundation Tables F1- F3 (Soil Class 3) – Unbraced System	11 – 13
Foundation Tables F4- F6 (Soil Class 3) – Braced System	14 – 16
Foundation Tables F7- F9 (Soil Class 4) – Unbraced System	17 – 19
Foundation Tables F10- F12 (Soil Class 4) – Braced System	20 – 22

Design Assumptions:

The following assumptions have been utilized in the analysis and development of the span tables and foundation tables herein. For any conditions that fall outside of the parameters listed below, please contact Tamarack for further assistance.

Notes for Span Tables – S1 through S6:

1. Dead Load (Weight) = 3 psf
2. Maximum PV Module Dimension = 80" x 40"
3. Wind speed is based on ASCE 7-16 Fig. 26.5-1A (Risk Category I).
4. Snow load is based on ground snow load ASCE 7-16 Fig. 7.2-1. Snow drift, unbalanced snow, or ponding snow has not been considered.
5. Topographic Factor (Kzt) = 1.0 (no topographic effects). Code required topographic effects have not been considered. Arrays are considered to be on relatively flat ground with no significant terrain changes.
6. Ground Elevation Factor (Ke) = 1.0. No elevation effects have been considered.
7. Shaded region with numbers denotes the requirement of (3) three 3.13 Rails.
8. Splices not permitted in outer 2/3 of end spans, the middle 1/3 of interior spans based on the installed pier spacing, or at end cantilever span. See Figure A below.
9. End cantilever span of pipe rails = 0.40 x maximum span from the below tables.

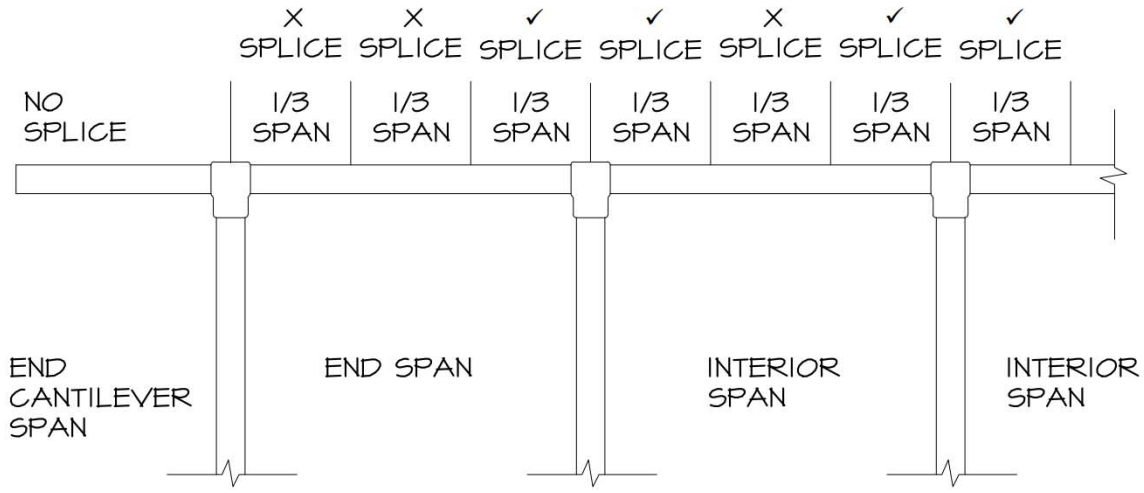

Figure A: Allowable Splice Location

Notes for Foundation Tables – F1 through F12:

1. Concrete Weight = 145 pcf
2. Concrete Compressive Strength f`c = 2500 psi
3. Skin Friction per 2018 IBC 1810.3.3.1.4 & 1810.3.3.1.5
4. Top 1'-0" of soil neglected for Skin Friction
5. Snow Load is taken as 0 psf for the foundation values below for Snow Loads greater than 0 psf. Lateral wind and uplift pressures are maximized without resistance due to Snow Loading.
6. Embedment depth shall be considered from top of finished grade. Concrete pier shall be below grade.
7. Provide Air Entraining Admixture for freeze and thaw cycles as required for colder climates.
8. Additional foundation requirements are needed where * is indicated. Contact Tamarack.
9. Resistance to corrosion and/or sulfate attack, along with possible adverse effects due to expansive soils has not been considered in these foundation recommendations. SML Engineers assumes no liability with regard to these items.
10. Soil classification shall be determined and verified by the end user of this certification letter.

Our analysis assumes that the rails, including the connections and associated hardware, are installed in a workmanlike manner in accordance with the "Tamarack Ground Mount Installation Manual" and generally accepted standards of construction practice. Additional information is available at the Tamarack web site, tamaracksolar.com. Verification of PV Module capacity to support the loads associated with the given array shall be the responsibility of the Contractor or Owner and not Tamarack or Starling Madison Lofquist.

Please feel free to contact me at your convenience if you have any questions.

Respectfully yours,

Tres Warner, P.E.
Design Division Manager

Tres J Warner

Digitally signed by Tres J Warner
DN: c=US, o=Starling Madison Lofquist Inc, dnQualifier=A01410C0000017BAC45E77500006C4C, cn=Tres J Warner
Date: 2022.04.29 14:59:28 -07'00'

4-29-22

Exp. 4/30/24

Table S1

Unbraced Maximum Post Spacing (in)			Wind Speed (mph)										
Exposure Category	Snow Load (psf)	Slope (deg)	90	95	100	105	110	120	130	140	150	160	170
B	0	0	126	126	126	126	126	120	113	106	100	95	90
		5	126	126	126	126	126	120	113	106	100	95	90
		10	126	126	122	117	113	105	98	92	87	82	78
		15	126	124	119	114	110	102	96	90	84	80	71
		20	123	118	113	109	104	89	76	66	57	50	44
		25	110	99	89	81	74	62	53	45	40	35	31
		30	81	72	65	59	54	45	39	33	29	26	23
		35	68	61	55	50	46	38	33	28	25	22	19
		40	58	52	47	43	39	33	28	24	21	18	N/A
		45	49	44	40	36	33	28	24	20	N/A	N/A	N/A
	10	0	111	111	111	111	111	108	104	100	96	92	89
		5	111	111	111	111	111	108	104	100	96	92	89
		10	111	111	109	107	104	100	95	91	87	82	78
		15	112	111	108	105	103	98	93	89	84	80	71
		20	113	110	107	104	101	89	76	66	57	50	44
		25	110	99	89	81	74	62	53	45	40	35	31
		30	81	72	65	59	54	45	39	33	29	26	23
		35	68	61	55	50	46	38	33	28	25	22	19
		40	58	52	47	43	39	33	28	24	21	18	N/A
		45	49	44	40	36	33	28	24	20	N/A	N/A	N/A
	20	0	95	95	95	95	95	93	90	87	85	82	80
		5	95	95	95	95	95	93	90	88	85	82	80
		10	95	95	94	92	91	88	84	81	79	76	73
		15	96	95	93	92	90	87	84	80	77	75	71
		20	98	96	94	92	90	87	76	66	57	50	44
		25	100	97	89	81	74	62	53	45	40	35	31
		30	81	72	65	59	54	45	39	33	29	26	23
		35	68	61	55	50	46	38	33	28	25	22	19
		40	58	52	47	43	39	33	28	24	21	18	N/A
		45	49	44	40	36	33	28	24	20	N/A	N/A	N/A
	30	0	89	89	89	89	89	87	85	83	80	78	76
		5	89	89	89	89	89	87	85	83	80	78	76
		10	89	89	88	87	85	83	80	78	75	73	70
		15	90	89	88	86	85	82	79	77	74	72	69
		20	92	91	89	87	86	83	76	66	57	50	44
		25	94	92	89	81	74	62	53	45	40	35	31
		30	81	72	65	59	54	45	39	33	29	26	23
		35	68	61	55	50	46	38	33	28	25	22	19
		40	58	52	47	43	39	33	28	24	21	18	N/A
		45	49	44	40	36	33	28	24	20	N/A	N/A	N/A
	40	0	81	81	81	81	81	80	78	76	74	73	71
		5	81	81	81	81	81	80	78	76	75	73	71
		10	81	81	81	80	79	76	74	72	70	68	66
		15	82	82	81	79	78	76	74	72	70	68	66
		20	85	84	82	81	80	77	75	66	57	50	44
		25	87	86	84	81	74	62	53	45	40	35	31
		30	81	72	65	59	54	45	39	33	29	26	23
		35	68	61	55	50	46	38	33	28	25	22	19
		40	58	52	47	43	39	33	28	24	21	18	N/A
		45	49	44	40	36	33	28	24	20	N/A	N/A	N/A
	50	0	74	74	74	74	74	74	73	71	70	68	67
		5	74	74	74	74	74	74	73	71	70	68	67
		10	74	74	74	74	73	71	70	68	66	65	63
		15	75	75	75	74	73	71	69	68	66	64	62
		20	79	78	77	76	75	73	70	66	57	50	44
		25	82	81	79	78	74	62	53	45	40	35	31
		30	81	72	65	59	54	45	39	33	29	26	23
		35	68	61	55	50	46	38	33	28	25	22	19
		40	58	52	47	43	39	33	28	24	21	18	N/A
		45	49	44	40	36	33	28	24	20	N/A	N/A	N/A
	60	0	68	68	68	68	68	68	68	67	66	65	63
		5	68	68	68	68	68	68	68	67	66	65	63
		10	68	68	68	68	68	67	66	64	63	62	60
		15	69	69	69	69	69	67	66	64	63	61	60
		20	73	73	72	71	71	69	67	65	57	50	44
		25	77	76	75	74	73	62	53	45	40	35	31
		30	81	72	65	59	54	45	39	33	29	26	23
		35	68	61	55	50	46	38	33	28	25	22	19
		40	58	52	47	43	39	33	28	24	21	18	N/A
		45	49	44	40	36	33	28	24	20	N/A	N/A	N/A
	70	0	63	63	63	63	63	63	63	63	62	61	60
		5	63	63	63	63	63	63	63	63	63	62	60
		10	63	63	63	63	63	63	63	61	60	59	58
		15	64	64	64	64	64	64	63	61	60	59	57
		20	68	68	68	68	67	66	64	62	57	50	44
		25	72	72	71	70	69	62	53	45	40	35	31
		30	77	72	65	59	54	45	39	33	29	26	23
		35	68	61	55	50	46	38	33	28	25	22	19
		40	58	52	47	43	39	33	28	24	21	N/A	N/A
		45	49	44	40	36	33	28	24	N/A	N/A	N/A	N/A

Notes – See Page 4

Table S2

Unbraced Maximum Post Spacing (in)			Wind Speed (mph)										
Exposure Category	Snow Load (psf)	Slope (deg)	90	95	100	105	110	120	130	140	150	160	170
C	0	0	126	123	118	114	110	102	95	89	84	79	75
		5	126	123	118	114	110	102	95	89	84	79	75
		10	113	108	104	100	96	89	83	77	73	68	65
		15	110	105	101	97	93	86	80	70	61	53	47
		20	105	96	86	78	71	60	51	44	38	34	30
		25	74	66	60	54	49	41	35	30	27	23	21
		30	54	49	44	40	36	30	26	22	19	17	15
		35	46	41	37	34	31	26	22	19	16	14	N/A
		40	39	35	32	29	26	22	19	N/A	N/A	N/A	N/A
		45	33	30	27	24	22	N/A	N/A	N/A	N/A	N/A	N/A
	10	0	111	109	107	104	102	97	93	88	84	79	75
		5	111	110	107	104	102	97	93	88	84	79	75
		10	104	101	99	96	93	88	83	77	73	68	65
		15	103	100	97	94	92	86	80	70	61	53	47
		20	101	96	86	78	71	60	51	44	38	34	30
		25	74	66	60	54	49	41	35	30	27	23	21
		30	54	49	44	40	36	30	26	22	19	17	15
		35	46	41	37	34	31	26	22	19	16	14	N/A
		40	39	35	32	29	26	22	19	N/A	N/A	N/A	N/A
		45	33	30	27	24	22	N/A	N/A	N/A	N/A	N/A	N/A
	20	0	95	94	92	91	89	86	83	79	77	74	71
		5	95	94	92	91	89	86	83	80	77	74	71
		10	91	89	87	85	83	80	76	73	70	67	64
		15	90	88	86	84	82	78	75	70	61	53	47
		20	90	88	86	78	71	60	51	44	38	34	30
		25	74	66	60	54	49	41	35	30	27	23	21
		30	54	49	44	40	36	30	26	22	19	17	15
		35	46	41	37	34	31	26	22	19	16	14	N/A
		40	39	35	32	29	26	22	19	N/A	N/A	N/A	N/A
		45	33	30	27	24	22	N/A	N/A	N/A	N/A	N/A	N/A
	30	0	89	88	87	85	84	81	78	76	73	71	68
		5	89	88	87	85	84	81	79	76	73	71	69
		10	85	84	82	81	79	76	73	70	67	65	62
		15	85	83	82	80	78	75	72	69	61	53	47
		20	86	84	82	78	71	60	51	44	38	34	30
		25	74	66	60	54	49	41	35	30	27	23	21
		30	54	49	44	40	36	30	26	22	19	17	15
		35	46	41	37	34	31	26	22	19	16	14	N/A
		40	39	35	32	29	26	22	19	N/A	N/A	N/A	N/A
		45	33	30	27	24	22	N/A	N/A	N/A	N/A	N/A	N/A
	40	0	81	80	79	78	77	75	73	71	69	67	65
		5	81	81	79	78	77	75	73	71	69	67	65
		10	79	77	76	75	74	71	69	66	64	62	59
		15	78	77	76	74	73	70	68	65	61	53	47
		20	80	78	77	75	71	60	51	44	38	34	30
		25	74	66	60	54	49	41	35	30	27	23	21
		30	54	49	44	40	36	30	26	22	19	17	15
		35	46	41	37	34	31	26	22	19	16	14	N/A
		40	39	35	32	29	26	22	19	N/A	N/A	N/A	N/A
		45	33	30	27	24	22	N/A	N/A	N/A	N/A	N/A	N/A
	50	0	74	74	74	73	72	70	68	67	65	63	62
		5	74	74	74	73	72	70	69	67	65	63	62
		10	73	72	71	70	69	67	65	63	61	59	57
		15	73	72	71	70	69	67	64	62	60	53	47
		20	75	73	72	71	70	60	51	44	38	34	30
		25	74	66	60	54	49	41	35	30	27	23	21
		30	54	49	44	40	36	30	26	22	19	17	15
		35	46	41	37	34	31	26	22	19	16	N/A	N/A
		40	39	35	32	29	26	22	19	N/A	N/A	N/A	N/A
		45	33	30	27	24	22	N/A	N/A	N/A	N/A	N/A	N/A
	60	0	68	68	68	68	68	66	65	63	62	60	59
		5	68	68	68	68	68	66	65	63	62	60	59
		10	68	68	67	66	65	63	62	60	58	56	55
		15	69	68	67	66	65	63	61	59	58	53	47
		20	71	70	68	67	66	60	51	44	38	34	30
		25	73	66	60	54	49	41	35	30	27	23	21
		30	54	49	44	40	36	30	26	22	19	17	N/A
		35	46	41	37	34	31	26	22	19	16	N/A	N/A
		40	39	35	32	29	26	22	19	N/A	N/A	N/A	N/A
		45	33	30	27	24	22	N/A	N/A	N/A	N/A	N/A	N/A
	70	0	63	63	63	63	63	63	62	60	59	58	56
		5	63	63	63	63	63	63	62	60	59	58	56
		10	63	63	63	63	62	60	59	57	56	54	53
		15	64	64	64	63	62	60	59	57	55	53	47
		20	67	66	65	64	63	60	51	44	38	34	30
		25	69	66	60	54	49	41	35	30	27	23	21
		30	54	49	44	40	36	30	26	22	19	N/A	N/A
		35	46	41	37	34	31	26	22	19	N/A	N/A	N/A
		40	39	35	32	29	26	22	N/A	N/A	N/A	N/A	N/A
		45	33	30	27	24	22	N/A	N/A	N/A	N/A	N/A	N/A

Notes – See Page 4

Table S3

Unbraced Maximum Post Spacing (in)			Wind Speed (mph)										
Exposure Category	Snow Load (psf)	Slope (deg)	90	95	100	105	110	120	130	140	150	160	170
D	0	0	119	114	110	105	101	94	88	82	77	73	69
		5	119	114	110	105	101	94	88	82	77	73	69
		10	105	100	96	92	88	81	76	71	66	62	59
		15	102	97	93	89	85	78	67	58	50	44	39
		20	88	79	71	65	59	49	42	36	32	28	25
		25	61	55	49	45	41	34	29	25	22	19	17
		30	45	40	36	33	30	25	21	18	16	14	13
		35	38	34	31	28	25	21	18	16	N/A	N/A	N/A
		40	32	29	26	24	21	18	N/A	N/A	N/A	N/A	N/A
		45	27	25	22	20	N/A	N/A	N/A	N/A	N/A	N/A	N/A
	10	0	107	105	102	99	97	92	87	82	77	73	69
		5	108	105	102	99	97	92	87	82	77	73	69
		10	99	96	93	90	88	81	76	71	66	62	59
		15	98	95	92	89	85	78	67	58	50	44	39
		20	88	79	71	65	59	49	42	36	32	28	25
		25	61	55	49	45	41	34	29	25	22	19	17
		30	45	40	36	33	30	25	21	18	16	14	13
		35	38	34	31	28	25	21	18	16	N/A	N/A	N/A
		40	32	29	26	24	21	18	N/A	N/A	N/A	N/A	N/A
		45	27	25	22	20	N/A	N/A	N/A	N/A	N/A	N/A	N/A
	20	0	92	91	89	87	85	82	79	75	72	70	67
		5	93	91	89	87	85	82	79	76	73	70	67
		10	87	85	83	81	79	75	72	69	66	62	59
		15	86	84	82	80	78	74	67	58	50	44	39
		20	86	79	71	65	59	49	42	36	32	28	25
		25	61	55	49	45	41	34	29	25	22	19	17
		30	45	40	36	33	30	25	21	18	16	14	13
		35	38	34	31	28	25	21	18	16	N/A	N/A	N/A
		40	32	29	26	24	21	18	N/A	N/A	N/A	N/A	N/A
		45	27	25	22	20	N/A	N/A	N/A	N/A	N/A	N/A	N/A
	30	0	87	85	84	82	81	78	75	72	70	67	65
		5	87	85	84	82	81	78	75	72	70	67	65
		10	83	81	79	77	76	72	69	66	63	61	58
		15	82	80	78	76	75	71	67	58	50	44	39
		20	82	79	71	65	59	49	42	36	32	28	25
		25	61	55	49	45	41	34	29	25	22	19	17
		30	45	40	36	33	30	25	21	18	16	14	13
		35	38	34	31	28	25	21	18	16	N/A	N/A	N/A
		40	32	29	26	24	21	18	N/A	N/A	N/A	N/A	N/A
		45	27	25	22	20	N/A	N/A	N/A	N/A	N/A	N/A	N/A
	40	0	80	78	77	76	75	72	70	68	66	64	61
		5	80	79	77	76	75	73	70	68	66	64	62
		10	76	75	73	72	71	68	65	63	60	58	56
		15	76	74	73	72	70	67	65	58	50	44	39
		20	77	75	71	65	59	49	42	36	32	28	25
		25	61	55	49	45	41	34	29	25	22	19	17
		30	45	40	36	33	30	25	21	18	16	14	13
		35	38	34	31	28	25	21	18	16	N/A	N/A	N/A
		40	32	29	26	24	21	18	N/A	N/A	N/A	N/A	N/A
		45	27	25	22	20	N/A	N/A	N/A	N/A	N/A	N/A	N/A
	50	0	74	73	72	71	70	68	66	64	62	61	59
		5	74	73	72	71	70	68	66	64	62	61	59
		10	71	70	69	68	67	64	62	60	58	56	54
		15	71	70	69	67	66	64	62	58	50	44	39
		20	72	71	70	65	59	49	42	36	32	28	25
		25	61	55	49	45	41	34	29	25	22	19	17
		30	45	40	36	33	30	25	21	18	16	14	N/A
		35	38	34	31	28	25	21	18	16	N/A	N/A	N/A
		40	32	29	26	24	21	18	N/A	N/A	N/A	N/A	N/A
		45	27	25	22	20	N/A	N/A	N/A	N/A	N/A	N/A	N/A
	60	0	68	68	68	67	66	64	63	61	60	58	56
		5	68	68	68	67	66	65	63	61	60	58	56
		10	67	66	65	64	63	61	59	57	56	54	52
		15	67	66	65	64	63	61	59	57	50	44	39
		20	69	67	66	65	59	49	42	36	32	28	25
		25	61	55	49	45	41	34	29	25	22	19	17
		30	45	40	36	33	30	25	21	18	16	14	N/A
		35	38	34	31	28	25	21	18	N/A	N/A	N/A	N/A
		40	32	29	26	24	21	18	N/A	N/A	N/A	N/A	N/A
		45	27	25	22	20	N/A	N/A	N/A	N/A	N/A	N/A	N/A
	70	0	63	63	63	63	63	61	60	58	57	56	54
		5	63	63	63	63	63	61	60	59	57	56	54
		10	63	63	62	61	60	59	57	55	54	52	50
		15	64	64	64	64	64	64	64	64	64	64	64
		20	65	64	63	62	59	49	42	36	32	28	25
		25	61	55	49	45	41	34	29	25	22	19	N/A
		30	45	40	36	33	30	25	21	18	16	N/A	N/A
		35	38	34	31	28	25	21	N/A	N/A	N/A	N/A	N/A
		40	32	29	26	24	21	N/A	N/A	N/A	N/A	N/A	N/A
		45	27	25	22	N/A	N/A	N/A	N/A	N/A	N/A	N/A	N/A

Notes – See Page 4

Table S4

Braced Maximum Post Spacing (in)			Wind Speed (mph)										
Exposure Category	Snow Load (psf)	Slope (deg)	90	95	100	105	110	120	130	140	150	160	170
B	0	0	126	126	126	126	126	120	113	106	100	95	90
		5	126	126	126	126	126	120	113	106	100	95	90
		10	126	126	122	117	113	105	98	92	87	82	78
		15	126	124	119	114	110	102	96	90	84	80	75
		20	123	118	113	109	104	97	90	85	80	75	71
		25	118	113	108	104	100	93	86	81	76	71	67
		30	114	109	104	100	96	89	83	77	73	68	64
		35	114	109	104	100	96	89	82	77	72	68	64
		40	115	110	105	100	96	89	83	77	73	68	N/A
		45	116	111	106	101	97	90	84	78	N/A	N/A	N/A
	10	0	111	111	111	111	111	108	104	100	96	92	89
		5	111	111	111	111	111	108	104	100	96	92	89
		10	111	111	109	107	104	100	95	91	87	82	78
		15	112	111	108	105	103	98	93	89	84	80	75
		20	113	110	107	104	101	96	90	85	80	75	71
		25	113	109	106	103	100	93	86	81	76	71	67
		30	112	109	104	100	96	89	83	77	73	68	64
		35	114	109	104	100	96	89	82	77	72	68	64
		40	115	110	105	100	96	89	83	77	73	68	N/A
		45	116	111	106	101	97	90	84	78	N/A	N/A	N/A
	20	0	95	95	95	95	95	93	90	87	85	82	80
		5	95	95	95	95	95	93	90	88	85	82	80
		10	95	95	94	92	91	88	84	81	79	76	73
		15	96	95	93	92	90	87	84	80	77	75	72
		20	98	96	94	92	90	87	83	79	76	73	70
		25	100	97	95	93	91	87	83	79	75	71	67
		30	101	99	96	94	91	86	82	77	73	68	64
		35	105	102	99	96	94	89	82	77	72	68	64
		40	110	106	103	100	96	89	83	77	73	68	N/A
		45	115	111	106	101	97	90	84	78	N/A	N/A	N/A
	30	0	89	89	89	89	89	87	85	83	80	78	76
		5	89	89	89	89	89	87	85	83	80	78	76
		10	89	89	88	87	85	83	80	78	75	73	70
		15	90	89	88	86	85	82	79	77	74	72	69
		20	92	91	89	87	86	83	79	76	73	71	68
		25	94	92	91	89	87	83	80	76	73	70	67
		30	97	94	92	90	88	84	80	76	73	68	64
		35	101	98	96	93	91	86	82	77	72	68	64
		40	106	103	100	97	95	89	83	77	73	68	N/A
		45	111	108	105	101	97	90	84	78	N/A	N/A	N/A
	40	0	81	81	81	81	81	80	78	76	74	73	71
		5	81	81	81	81	81	80	78	76	75	73	71
		10	81	81	81	80	79	76	74	72	70	68	66
		15	82	82	81	79	78	76	74	72	70	68	66
		20	85	84	82	81	80	77	75	72	70	67	65
		25	87	86	84	83	81	78	75	72	70	67	65
		30	90	88	87	85	83	79	76	73	70	67	64
		35	95	93	91	88	86	82	79	75	72	68	64
		40	100	98	95	93	91	86	82	77	73	68	N/A
		45	107	104	101	98	95	90	84	78	N/A	N/A	N/A
	50	0	74	74	74	74	74	74	73	71	70	68	67
		5	74	74	74	74	74	74	73	71	70	68	67
		10	74	74	74	74	73	71	70	68	66	65	63
		15	75	75	75	74	73	71	69	68	66	64	62
		20	79	78	77	76	75	73	70	68	66	64	62
		25	82	81	79	78	77	74	72	69	67	65	62
		30	85	83	82	80	79	76	73	70	67	65	62
		35	90	88	86	84	83	79	76	73	70	67	64
		40	96	94	91	89	87	83	79	76	72	68	N/A
		45	102	100	97	95	92	88	83	78	N/A	N/A	N/A
	60	0	68	68	68	68	68	68	68	67	66	65	63
		5	68	68	68	68	68	68	68	67	66	65	63
		10	68	68	68	68	68	67	66	64	63	62	60
		15	69	69	69	69	69	67	66	64	63	61	60
		20	73	73	72	71	71	69	67	65	63	62	60
		25	77	76	75	74	73	71	68	66	64	62	60
		30	81	79	78	77	75	73	70	68	65	63	61
		35	85	84	82	81	79	76	73	70	68	65	63
		40	91	90	88	86	84	81	77	74	71	68	N/A
		45	98	96	94	92	90	85	81	78	N/A	N/A	N/A
	70	0	63	63	63	63	63	63	63	63	62	61	60
		5	63	63	63	63	63	63	63	63	63	62	60
		10	63	63	63	63	63	63	63	61	60	59	58
		15	64	64	64	64	64	64	63	61	60	59	57
		20	68	68	68	68	67	66	64	62	61	59	58
		25	72	72	71	70	69	68	66	64	62	60	58
		30	77	76	74	73	72	70	68	65	63	61	59
		35	82	80	79	78	76	74	71	68	66	63	61
		40	88	86	85	83	81	78	75	72	69	N/A	N/A
		45	95	93	91	89	87	83	79	N/A	N/A	N/A	N/A

Notes – See Page 4

Table S5

Exposure Category	Snow Load (psf)	Slope (deg)	Braced Maximum Post Spacing (in) Wind Speed (mph) 90	95	100	105	110	120	130	140	150	160	170
C	0	0	126	123	118	114	110	102	95	89	84	79	75
		5	126	123	118	114	110	102	95	89	84	79	75
		10	113	108	104	100	96	89	83	77	73	68	65
		15	110	105	101	97	93	86	80	75	70	66	62
		20	105	100	96	92	88	81	76	71	66	62	59
		25	100	95	91	87	84	77	72	67	63	59	56
		30	96	92	88	84	80	74	69	64	60	56	53
		35	96	91	87	83	80	74	68	64	60	56	N/A
		40	97	92	88	84	80	74	69	N/A	N/A	N/A	N/A
		45	97	93	89	85	81	N/A	N/A	N/A	N/A	N/A	N/A
	10	0	111	109	107	104	102	97	93	88	84	79	75
		5	111	110	107	104	102	97	93	88	84	79	75
		10	104	101	99	96	93	88	83	77	73	68	65
		15	103	100	97	94	92	86	80	75	70	66	62
		20	101	98	95	92	88	81	76	71	66	62	59
		25	100	95	91	87	84	77	72	67	63	59	56
		30	96	92	88	84	80	74	69	64	60	56	53
		35	96	91	87	83	80	74	68	64	60	56	N/A
		40	97	92	88	84	80	74	69	N/A	N/A	N/A	N/A
		45	97	93	89	85	81	N/A	N/A	N/A	N/A	N/A	N/A
	20	0	95	94	92	91	89	86	83	79	77	74	71
		5	95	94	92	91	89	86	83	80	77	74	71
		10	91	89	87	85	83	80	76	73	70	67	64
		15	90	88	86	84	82	78	75	72	69	66	62
		20	90	88	86	84	81	77	74	70	66	62	59
		25	91	88	86	83	81	77	72	67	63	59	56
		30	91	88	86	83	80	74	69	64	60	56	53
		35	94	91	87	83	80	74	68	64	60	56	N/A
		40	97	92	88	84	80	74	69	N/A	N/A	N/A	N/A
		45	97	93	89	85	81	N/A	N/A	N/A	N/A	N/A	N/A
	30	0	89	88	87	85	84	81	78	76	73	71	68
		5	89	88	87	85	84	81	79	76	73	71	69
		10	85	84	82	81	79	76	73	70	67	65	62
		15	85	83	82	80	78	75	72	69	66	64	61
		20	86	84	82	80	78	74	71	68	65	62	59
		25	87	85	82	80	78	74	70	67	63	59	56
		30	88	85	83	80	78	74	69	64	60	56	53
		35	91	88	85	83	80	74	68	64	60	56	N/A
		40	95	91	88	84	80	74	69	N/A	N/A	N/A	N/A
		45	97	93	89	85	81	N/A	N/A	N/A	N/A	N/A	N/A
	40	0	81	80	79	78	77	75	73	71	69	67	65
		5	81	81	79	78	77	75	73	71	69	67	65
		10	79	77	76	75	74	71	69	66	64	62	59
		15	78	77	76	74	73	70	68	65	63	61	59
		20	80	78	77	75	73	70	68	65	62	60	57
		25	81	79	78	76	74	71	67	64	62	59	56
		30	83	81	79	77	75	71	67	64	60	56	53
		35	86	84	82	79	77	73	68	64	60	56	N/A
		40	91	88	85	83	80	74	69	N/A	N/A	N/A	N/A
		45	95	92	89	85	81	N/A	N/A	N/A	N/A	N/A	N/A
	50	0	74	74	74	73	72	70	68	67	65	63	62
		5	74	74	74	73	72	70	69	67	65	63	62
		10	73	72	71	70	69	67	65	63	61	59	57
		15	73	72	71	70	69	67	64	62	60	58	56
		20	75	73	72	71	70	67	64	62	60	58	55
		25	77	75	74	72	71	68	65	62	60	57	55
		30	79	77	75	73	72	68	65	62	59	56	53
		35	83	81	78	76	74	71	67	64	60	N/A	N/A
		40	87	85	82	80	78	74	69	N/A	N/A	N/A	N/A
		45	92	90	87	84	81	N/A	N/A	N/A	N/A	N/A	N/A
	60	0	68	68	68	68	68	66	65	63	62	60	59
		5	68	68	68	68	68	66	65	63	62	60	59
		10	68	68	67	66	65	63	62	60	58	56	55
		15	69	68	67	66	65	63	61	59	58	56	54
		20	71	70	68	67	66	64	62	60	58	56	54
		25	73	72	70	69	68	65	62	60	58	56	53
		30	75	74	72	71	69	66	63	60	58	55	N/A
		35	79	77	76	74	72	69	65	62	59	N/A	N/A
		40	84	82	80	78	76	72	68	N/A	N/A	N/A	N/A
		45	90	87	84	82	80	N/A	N/A	N/A	N/A	N/A	N/A
	70	0	63	63	63	63	63	63	62	60	59	58	56
		5	63	63	63	63	63	63	62	60	59	58	56
		10	63	63	63	63	62	60	59	57	56	54	53
		15	64	64	64	63	62	60	59	57	55	54	52
		20	67	66	65	64	63	61	59	58	56	54	52
		25	69	68	67	66	65	63	60	58	56	54	52
		30	72	71	69	68	67	64	61	59	56	N/A	N/A
		35	76	75	73	71	70	67	64	61	N/A	N/A	N/A
		40	81	79	77	75	74	70	N/A	N/A	N/A	N/A	N/A
		45	87	85	82	80	78	N/A	N/A	N/A	N/A	N/A	N/A

Notes – See Page 4

Table S6

Braced Maximum Post Spacing (in)			Wind Speed (mph)										
Exposure Category	Snow Load (psf)	Slope (deg)	90	95	100	105	110	120	130	140	150	160	170
D	0	0	119	114	110	105	101	94	88	82	77	73	69
		5	119	114	110	105	101	94	88	82	77	73	69
		10	105	100	96	92	88	81	76	71	66	62	59
		15	102	97	93	89	85	79	73	68	64	60	57
		20	96	92	88	84	81	74	69	64	60	57	54
		25	92	88	84	80	77	71	66	61	57	54	51
		30	88	84	80	77	73	68	63	59	55	52	49
		35	88	84	80	76	73	67	62	58	N/A	N/A	N/A
		40	89	84	80	77	74	68	N/A	N/A	N/A	N/A	N/A
		45	89	85	81	77	N/A	N/A	N/A	N/A	N/A	N/A	N/A
	10	0	107	105	102	99	97	92	87	82	77	73	69
		5	108	105	102	99	97	92	87	82	77	73	69
		10	99	96	93	90	88	81	76	71	66	62	59
		15	98	95	92	89	85	79	73	68	64	60	57
		20	96	92	88	84	81	74	69	64	60	57	54
		25	92	88	84	80	77	71	66	61	57	54	51
		30	88	84	80	77	73	68	63	59	55	52	49
		35	88	84	80	76	73	67	62	58	N/A	N/A	N/A
		40	89	84	80	77	74	68	N/A	N/A	N/A	N/A	N/A
		45	89	85	81	77	N/A	N/A	N/A	N/A	N/A	N/A	N/A
	20	0	92	91	89	87	85	82	79	75	72	70	67
		5	93	91	89	87	85	82	79	76	73	70	67
		10	87	85	83	81	79	75	72	69	66	62	59
		15	86	84	82	80	78	74	71	67	64	60	57
		20	86	84	81	79	77	73	69	64	60	57	54
		25	86	83	81	78	76	71	66	61	57	54	51
		30	86	83	80	77	73	68	63	59	55	52	49
		35	88	84	80	76	73	67	62	58	N/A	N/A	N/A
		40	89	84	80	77	74	68	N/A	N/A	N/A	N/A	N/A
		45	89	85	81	77	N/A	N/A	N/A	N/A	N/A	N/A	N/A
	30	0	87	85	84	82	81	78	75	72	70	67	65
		5	87	85	84	82	81	78	75	72	70	67	65
		10	83	81	79	77	76	72	69	66	63	61	58
		15	82	80	78	76	75	71	68	65	62	60	57
		20	82	80	78	76	74	70	67	64	60	57	54
		25	83	80	78	76	74	70	66	61	57	54	51
		30	83	81	78	76	73	68	63	59	55	52	49
		35	86	83	80	76	73	67	62	58	N/A	N/A	N/A
		40	89	84	80	77	74	68	N/A	N/A	N/A	N/A	N/A
		45	89	85	81	77	N/A	N/A	N/A	N/A	N/A	N/A	N/A
	40	0	80	78	77	76	75	72	70	68	66	64	61
		5	80	79	77	76	75	73	70	68	66	64	62
		10	76	75	73	72	71	68	65	63	60	58	56
		15	76	74	73	72	70	67	65	62	60	57	55
		20	77	75	73	72	70	67	64	61	58	56	54
		25	78	76	74	72	70	67	64	60	57	54	51
		30	79	77	75	73	70	67	63	59	55	52	49
		35	82	80	77	75	72	67	62	58	N/A	N/A	N/A
		40	86	83	80	77	74	68	N/A	N/A	N/A	N/A	N/A
		45	89	85	81	77	N/A	N/A	N/A	N/A	N/A	N/A	N/A
	50	0	74	73	72	71	70	68	66	64	62	61	59
		5	74	73	72	71	70	68	66	64	62	61	59
		10	71	70	69	68	67	64	62	60	58	56	54
		15	71	70	69	67	66	64	62	59	57	55	53
		20	72	71	70	68	67	64	61	59	56	54	52
		25	74	72	71	69	67	64	61	59	56	54	51
		30	76	74	72	70	68	64	61	58	55	52	N/A
		35	79	77	74	72	70	66	62	58	N/A	N/A	N/A
		40	83	80	78	75	73	68	N/A	N/A	N/A	N/A	N/A
		45	87	84	81	77	N/A	N/A	N/A	N/A	N/A	N/A	N/A
	60	0	68	68	68	67	66	64	63	61	60	58	56
		5	68	68	68	67	66	65	63	61	60	58	56
		10	67	66	65	64	63	61	59	57	56	54	52
		15	67	66	65	64	63	61	59	57	55	53	51
		20	69	67	66	65	64	61	59	57	55	53	51
		25	70	69	68	66	65	62	59	57	54	52	50
		30	72	71	69	67	66	63	60	57	54	52	N/A
		35	76	74	72	70	68	65	61	N/A	N/A	N/A	N/A
		40	80	78	76	73	71	67	N/A	N/A	N/A	N/A	N/A
		45	85	82	80	77	N/A	N/A	N/A	N/A	N/A	N/A	N/A
	70	0	63	63	63	63	63	61	60	58	57	56	54
		5	63	63	63	63	63	61	60	59	57	56	54
		10	63	63	62	61	60	59	57	55	54	52	50
		15	64	63	62	61	60	58	57	55	53	51	50
		20	65	64	63	62	61	59	57	55	53	51	49
		25	67	66	65	64	62	60	57	55	53	51	N/A
		30	70	68	67	65	64	61	58	55	53	N/A	N/A
		35	73	71	70	68	66	63	N/A	N/A	N/A	N/A	N/A
		40	78	76	74	72	70	N/A	N/A	N/A	N/A	N/A	N/A
		45	83	80	78	N/A	N/A	N/A	N/A	N/A	N/A	N/A	N/A

Notes – See Page 4

Table F1 - Soil Class 3

Unbraced Minimum Foundation Depths (in)			Wind Speed (mph)										
Exposure Category	Pier Diameter (in)	Slope (deg)	90	95	100	105	110	120	130	140	150	160	170
B	12	0	36	36	36	36	36	36	36	36	36	36	36
		5	36	36	36	36	36	36	36	36	36	36	36
		10	36	36	36	36	36	36	36	36	36	42	42
		15	36	42	42	42	42	42	48	48	48	48	48
		20	42	48	48	48	48	48	48	48	48	48	48
		25	48	48	48	48	48	48	48	48	48	48	48
		30	48	48	48	48	48	48	48	48	48	48	*
		35	48	48	48	48	48	48	48	48	48	*	*
		40	48	48	48	48	48	48	48	*	*	*	*
		45	48	48	48	48	48	48	*	*	*	*	*
	16	0	36	36	36	36	36	36	36	36	36	36	36
		5	36	36	36	36	36	36	36	36	36	36	36
		10	36	36	36	36	36	36	36	36	36	36	36
		15	36	36	36	36	36	42	42	42	42	42	42
		20	42	42	42	42	42	42	42	42	42	42	42
		25	42	42	42	42	42	42	42	42	42	42	*
		30	42	42	42	42	42	42	42	42	*	*	*
		35	42	42	42	42	42	42	42	*	*	*	*
		40	42	42	42	42	42	42	*	*	*	*	*
		45	42	42	42	42	42	*	*	*	*	*	*
	20	0	36	36	36	36	36	36	36	36	36	36	36
		5	36	36	36	36	36	36	36	36	36	36	36
		10	36	36	36	36	36	36	36	36	36	36	36
		15	36	36	36	36	36	36	36	36	42	42	42
		20	36	36	36	42	42	42	42	42	42	42	42
		25	42	42	42	42	42	42	42	42	*	*	*
		30	42	42	42	42	42	42	*	*	*	*	*
		35	42	42	42	42	42	*	*	*	*	*	*
		40	42	42	42	42	*	*	*	*	*	*	*
		45	42	42	*	*	*	*	*	*	*	*	*
	24	0	36	36	36	36	36	36	36	36	36	36	36
		5	36	36	36	36	36	36	36	36	36	36	36
		10	36	36	36	36	36	36	36	36	36	36	36
		15	36	36	36	36	36	36	36	36	36	36	36
		20	36	36	36	36	36	36	36	36	36	36	*
		25	36	36	36	36	36	36	36	*	*	*	*
		30	36	36	36	36	36	*	*	*	*	*	*
		35	36	36	36	36	*	*	*	*	*	*	*
		40	36	36	*	*	*	*	*	*	*	*	*
		45	36	*	*	*	*	*	*	*	*	*	*

Notes – See Page 5

Table F2 - Soil Class 3

Unbraced Minimum Foundation Depths (in)			Wind Speed (mph)										
Exposure Category	Pier Diameter (in)	Slope (deg)	90	95	100	105	110	120	130	140	150	160	170
C	12	0	36	36	36	36	36	36	36	36	36	36	42
		5	36	36	36	36	36	36	36	36	36	36	36
		10	36	36	36	36	36	36	42	42	42	42	42
		15	42	42	42	42	48	48	48	48	48	48	48
		20	48	48	48	48	48	48	48	48	48	48	48
		25	48	48	48	48	48	48	48	48	48	*	*
		30	48	48	48	48	48	48	48	*	*	*	*
		35	48	48	48	48	48	48	*	*	*	*	*
		40	48	48	48	48	48	*	*	*	*	*	*
		45	48	48	48	48	*	*	*	*	*	*	*
	16	0	36	36	36	36	36	36	36	36	36	36	36
		5	36	36	36	36	36	36	36	36	36	36	36
		10	36	36	36	36	36	36	36	36	36	36	42
		15	36	36	42	42	42	42	42	42	42	42	42
		20	42	42	42	42	42	42	42	42	42	42	*
		25	42	42	42	42	42	42	42	*	*	*	*
		30	42	42	42	42	42	*	*	*	*	*	*
		35	42	42	42	42	*	*	*	*	*	*	*
		40	42	42	*	*	*	*	*	*	*	*	*
		45	42	*	*	*	*	*	*	*	*	*	*
	20	0	36	36	36	36	36	36	36	36	36	36	36
		5	36	36	36	36	36	36	36	36	36	36	36
		10	36	36	36	36	36	36	36	36	36	36	36
		15	36	36	36	36	36	42	42	42	42	42	42
		20	42	42	42	42	42	42	42	42	*	*	*
		25	42	42	42	42	42	42	*	*	*	*	*
		30	42	42	42	*	*	*	*	*	*	*	*
		35	42	42	*	*	*	*	*	*	*	*	*
		40	*	*	*	*	*	*	*	*	*	*	*
		45	*	*	*	*	*	*	*	*	*	*	*
	24	0	36	36	36	36	36	36	36	36	36	36	36
		5	36	36	36	36	36	36	36	36	36	36	36
		10	36	36	36	36	36	36	36	36	36	36	36
		15	36	36	36	36	36	36	36	36	36	36	*
		20	36	36	36	36	36	36	36	*	*	*	*
		25	36	36	36	36	36	*	*	*	*	*	*
		30	36	36	*	*	*	*	*	*	*	*	*
		35	*	*	*	*	*	*	*	*	*	*	*
		40	*	*	*	*	*	*	*	*	*	*	*
		45	*	*	*	*	*	*	*	*	*	*	*

Notes – See Page 5

Table F3 - Soil Class 3

Unbraced Minimum Foundation Depths (in)			Wind Speed (mph)										
Exposure Category	Pier Diameter (in)	Slope (deg)	90	95	100	105	110	120	130	140	150	160	170
D	12	0	36	36	36	36	36	36	36	36	36	42	42
		5	36	36	36	36	36	36	36	36	36	42	42
		10	36	36	36	36	36	42	42	42	42	48	48
		15	42	42	48	48	48	48	48	48	48	48	48
		20	48	48	48	48	48	48	48	48	48	48	48
		25	48	48	48	48	48	48	48	48	*	*	*
		30	48	48	48	48	48	48	*	*	*	*	*
		35	48	48	48	48	48	*	*	*	*	*	*
		40	48	48	48	*	*	*	*	*	*	*	*
		45	48	48	*	*	*	*	*	*	*	*	*
	16	0	36	36	36	36	36	36	36	36	36	36	36
		5	36	36	36	36	36	36	36	36	36	36	36
		10	36	36	36	36	36	36	36	36	36	42	42
		15	42	42	42	42	42	42	42	42	42	42	42
		20	42	42	42	42	42	42	42	42	*	*	*
		25	42	42	42	42	42	42	*	*	*	*	*
		30	42	42	42	42	*	*	*	*	*	*	*
		35	42	42	*	*	*	*	*	*	*	*	*
		40	42	*	*	*	*	*	*	*	*	*	*
		45	*	*	*	*	*	*	*	*	*	*	*
	20	0	36	36	36	36	36	36	36	36	36	36	36
		5	36	36	36	36	36	36	36	36	36	36	36
		10	36	36	36	36	36	36	36	36	36	36	36
		15	36	36	36	36	42	42	42	42	42	42	*
		20	42	42	42	42	42	42	42	*	*	*	*
		25	42	42	42	42	42	*	*	*	*	*	*
		30	42	42	*	*	*	*	*	*	*	*	*
		35	*	*	*	*	*	*	*	*	*	*	*
		40	*	*	*	*	*	*	*	*	*	*	*
		45	*	*	*	*	*	*	*	*	*	*	*
	24	0	36	36	36	36	36	36	36	36	36	36	36
		5	36	36	36	36	36	36	36	36	36	36	36
		10	36	36	36	36	36	36	36	36	36	36	36
		15	36	36	36	36	36	36	36	36	36	*	*
		20	36	36	36	36	36	36	*	*	*	*	*
		25	36	36	36	*	*	*	*	*	*	*	*
		30	*	*	*	*	*	*	*	*	*	*	*
		35	*	*	*	*	*	*	*	*	*	*	*
		40	*	*	*	*	*	*	*	*	*	*	*
		45	*	*	*	*	*	*	*	*	*	*	*

Notes – See Page 5

Table F4 - Soil Class 3

Braced Minimum Foundation Depths (in)			Wind Speed (mph)										
Exposure Category	Pier Diameter (in)	Slope (deg)	90	95	100	105	110	120	130	140	150	160	170
B	12	0	36	36	36	36	36	36	36	36	36	36	36
		5	36	36	36	36	36	36	36	36	36	36	36
		10	36	36	36	36	36	36	36	36	36	36	42
		15	36	36	36	36	36	36	42	42	42	42	48
		20	36	42	42	42	42	48	48	48	48	54	54
		25	42	48	48	48	48	54	54	54	54	60	60
		30	48	48	54	54	54	54	60	60	66	66	66
		35	54	54	54	54	60	60	66	66	66	72	72
		40	54	60	60	60	60	66	66	72	72	78	78
		45	60	60	66	66	66	72	72	78	78	84	84
	16	0	36	36	36	36	36	36	36	36	36	36	36
		5	36	36	36	36	36	36	36	36	36	36	36
		10	36	36	36	36	36	36	36	36	36	36	36
		15	36	36	36	36	36	36	36	36	36	42	42
		20	36	36	36	36	36	42	42	42	42	48	48
		25	36	42	42	42	42	42	48	48	48	54	54
		30	42	42	48	48	48	48	54	54	54	60	60
		35	48	48	48	48	54	54	54	60	60	60	66
		40	48	54	54	54	54	60	60	60	66	66	66
		45	54	54	54	60	60	60	66	66	72	72	72
	20	0	36	36	36	36	36	36	36	36	36	36	36
		5	36	36	36	36	36	36	36	36	36	36	36
		10	36	36	36	36	36	36	36	36	36	36	36
		15	36	36	36	36	36	36	36	36	36	36	36
		20	36	36	36	36	36	36	36	36	42	42	42
		25	36	36	36	36	42	42	42	42	48	48	48
		30	42	42	42	42	42	48	48	48	48	54	54
		35	42	42	42	48	48	48	48	54	54	54	60
		40	48	48	48	48	48	54	54	54	60	60	60
		45	48	48	54	54	54	54	60	60	60	66	66
	24	0	36	36	36	36	36	36	36	36	36	36	36
		5	36	36	36	36	36	36	36	36	36	36	36
		10	36	36	36	36	36	36	36	36	36	36	36
		15	36	36	36	36	36	36	36	36	36	36	36
		20	36	36	36	36	36	36	36	36	36	36	42
		25	36	36	36	36	36	36	42	42	42	42	42
		30	36	36	36	42	42	42	42	48	48	48	48
		35	36	42	42	42	42	42	48	48	48	54	54
		40	42	42	42	42	48	48	48	54	54	54	54
		45	42	48	48	48	48	54	54	54	60	60	60

Notes – See Page 5

Table F5 - Soil Class 3

Braced Minimum Foundation Depths (in)			Wind Speed (mph)										
Exposure Category	Pier Diameter (in)	Slope (deg)	90	95	100	105	110	120	130	140	150	160	170
C	12	0	36	36	36	36	36	36	36	36	36	36	42
		5	36	36	36	36	36	36	36	36	36	36	42
		10	36	36	36	36	36	36	36	42	42	48	48
		15	36	36	42	42	42	42	42	48	48	54	54
		20	42	42	48	48	48	48	54	54	54	54	60
		25	48	48	54	54	54	54	60	60	60	66	66
		30	54	54	60	60	60	60	66	66	72	72	72
		35	60	60	60	66	66	66	72	72	72	78	78
		40	60	66	66	66	72	72	78	78	78	84	84
		45	66	72	72	72	72	78	84	84	84	90	90
	16	0	36	36	36	36	36	36	36	36	36	36	36
		5	36	36	36	36	36	36	36	36	36	36	36
		10	36	36	36	36	36	36	36	36	36	36	36
		15	36	36	36	36	36	36	36	42	42	42	42
		20	36	36	42	42	42	42	48	48	48	48	54
		25	42	42	48	48	48	48	54	54	54	54	60
		30	48	48	48	54	54	54	60	60	60	66	66
		35	54	54	54	54	54	60	60	66	66	66	72
		40	54	54	60	60	60	66	66	66	72	72	72
		45	60	60	60	66	66	66	72	72	78	78	78
	20	0	36	36	36	36	36	36	36	36	36	36	36
		5	36	36	36	36	36	36	36	36	36	36	36
		10	36	36	36	36	36	36	36	36	36	36	36
		15	36	36	36	36	36	36	36	36	36	42	42
		20	36	36	36	36	36	42	42	42	42	48	48
		25	42	42	42	42	42	42	48	48	48	54	54
		30	42	42	48	48	48	48	54	54	54	60	60
		35	48	48	48	48	54	54	54	60	60	60	60
		40	48	54	54	54	54	60	60	60	66	66	66
		45	54	54	54	60	60	60	66	66	66	72	72
	24	0	36	36	36	36	36	36	36	36	36	36	36
		5	36	36	36	36	36	36	36	36	36	36	36
		10	36	36	36	36	36	36	36	36	36	36	36
		15	36	36	36	36	36	36	36	36	36	36	36
		20	36	36	36	36	36	36	36	42	42	42	42
		25	36	36	36	36	42	42	42	42	48	48	48
		30	42	42	42	42	42	48	48	48	54	54	54
		35	42	42	48	48	48	48	54	54	54	54	60
		40	48	48	48	48	48	54	54	54	60	60	60
		45	48	48	54	54	54	54	60	60	66	66	66

Notes – See Page 5

Table F6 - Soil Class 3

Braced Minimum Foundation Depths (in)			Wind Speed (mph)										
Exposure Category	Pier Diameter (in)	Slope (deg)	90	95	100	105	110	120	130	140	150	160	170
D	12	0	36	36	36	36	36	36	36	36	36	42	42
		5	36	36	36	36	36	36	36	36	42	42	42
		10	36	36	36	36	36	42	42	42	48	48	54
		15	36	42	42	42	42	42	48	48	54	54	60
		20	48	48	48	48	48	54	54	54	60	60	66
		25	54	54	54	54	54	60	60	66	66	66	72
		30	60	60	60	60	66	66	66	72	72	78	78
		35	60	60	66	66	66	72	72	78	78	78	84
		40	66	66	72	72	72	78	78	84	84	90	90
		45	72	72	72	78	78	84	84	90	90	96	96
	16	0	36	36	36	36	36	36	36	36	36	36	36
		5	36	36	36	36	36	36	36	36	36	36	36
		10	36	36	36	36	36	36	36	36	36	42	42
		15	36	36	36	36	36	42	42	42	42	42	48
		20	42	42	42	42	42	48	48	48	48	54	54
		25	48	48	48	48	48	54	54	54	60	60	60
		30	48	54	54	54	54	60	60	60	66	66	66
		35	54	54	54	60	60	60	66	66	66	72	72
		40	60	60	60	60	66	66	66	72	72	78	78
		45	60	66	66	66	66	72	72	78	78	84	84
	20	0	36	36	36	36	36	36	36	36	36	36	36
		5	36	36	36	36	36	36	36	36	36	36	36
		10	36	36	36	36	36	36	36	36	36	36	36
		15	36	36	36	36	36	36	36	36	42	42	42
		20	36	36	36	42	42	42	42	42	48	48	48
		25	42	42	42	42	48	48	48	48	54	54	54
		30	48	48	48	48	48	54	54	54	60	60	60
		35	48	48	54	54	54	54	60	60	60	66	66
		40	54	54	54	54	60	60	60	66	66	66	72
		45	54	60	60	60	60	66	66	72	72	72	78
	24	0	36	36	36	36	36	36	36	36	36	36	36
		5	36	36	36	36	36	36	36	36	36	36	36
		10	36	36	36	36	36	36	36	36	36	36	36
		15	36	36	36	36	36	36	36	36	36	36	36
		20	36	36	36	36	36	36	42	42	42	42	42
		25	36	36	42	42	42	42	48	48	48	48	54
		30	42	42	42	48	48	48	48	54	54	54	54
		35	42	48	48	48	48	54	54	54	60	60	60
		40	48	48	48	54	54	54	60	60	60	66	66
		45	54	54	54	54	54	60	60	66	66	66	72

Notes – See Page 5

Table F7 - Soil Class 4

Unbraced Minimum Foundation Depths (in)			Wind Speed (mph)										
Exposure Category	Pier Diameter (in)	Slope (deg)	90	95	100	105	110	120	130	140	150	160	170
B	12	0	36	36	36	36	36	36	36	36	36	36	42
		5	36	36	36	36	36	36	36	36	36	36	42
		10	36	36	36	36	36	42	42	42	42	48	48
		15	42	42	48	48	48	48	48	54	54	54	54
		20	48	54	54	54	54	54	54	54	54	54	54
		25	54	54	54	54	54	54	54	54	54	54	54
		30	54	54	54	54	54	54	54	54	54	54	*
		35	54	54	54	54	54	54	54	54	54	*	*
		40	54	54	54	54	54	54	54	*	*	*	*
		45	54	54	54	54	54	54	*	*	*	*	*
	16	0	36	36	36	36	36	36	36	36	36	36	36
		5	36	36	36	36	36	36	36	36	36	36	36
		10	36	36	36	36	36	36	36	36	36	42	42
		15	36	42	42	42	42	42	48	48	48	48	48
		20	42	48	48	48	48	48	48	48	48	48	48
		25	48	48	48	48	48	48	48	48	48	48	*
		30	48	48	48	48	48	48	48	48	*	*	*
		35	48	48	48	48	48	48	48	*	*	*	*
		40	48	48	48	48	48	48	*	*	*	*	*
		45	48	48	48	48	48	*	*	*	*	*	*
	20	0	36	36	36	36	36	36	36	36	36	36	36
		5	36	36	36	36	36	36	36	36	36	36	36
		10	36	36	36	36	36	36	36	36	36	36	36
		15	36	36	36	36	36	42	42	42	42	48	48
		20	42	42	42	42	48	48	48	48	48	48	48
		25	48	48	48	48	48	48	48	48	*	*	*
		30	48	48	48	48	48	48	*	*	*	*	*
		35	48	48	48	48	48	*	*	*	*	*	*
		40	48	48	48	48	*	*	*	*	*	*	*
		45	48	48	*	*	*	*	*	*	*	*	*
	24	0	36	36	36	36	36	36	36	36	36	36	36
		5	36	36	36	36	36	36	36	36	36	36	36
		10	36	36	36	36	36	36	36	36	36	36	36
		15	36	36	36	36	36	36	36	42	42	42	42
		20	36	42	42	42	42	42	42	42	42	42	*
		25	42	42	42	42	42	42	42	*	*	*	*
		30	42	42	42	42	42	*	*	*	*	*	*
		35	42	42	42	42	*	*	*	*	*	*	*
		40	42	42	*	*	*	*	*	*	*	*	*
		45	42	*	*	*	*	*	*	*	*	*	*

Notes – See Page 5

Table F8 - Soil Class 4

Unbraced Minimum Foundation Depths (in)			Wind Speed (mph)										
Exposure Category	Pier Diameter (in)	Slope (deg)	90	95	100	105	110	120	130	140	150	160	170
C	12	0	36	36	36	36	36	36	36	42	42	48	48
		5	36	36	36	36	36	36	36	42	42	48	48
		10	36	36	42	42	42	42	42	48	54	54	60
		15	48	48	48	48	54	54	54	54	54	54	54
		20	54	54	54	54	54	54	54	54	54	54	54
		25	54	54	54	54	54	54	54	54	54	*	*
		30	54	54	54	54	54	54	54	*	*	*	*
		35	54	54	54	54	54	54	*	*	*	*	*
		40	54	54	54	54	54	*	*	*	*	*	*
		45	54	54	54	54	*	*	*	*	*	*	*
	16	0	36	36	36	36	36	36	36	36	36	36	36
		5	36	36	36	36	36	36	36	36	36	36	36
		10	36	36	36	36	36	36	42	42	42	42	42
		15	42	42	42	42	48	48	48	48	48	48	48
		20	48	48	48	48	48	48	48	48	48	48	*
		25	48	48	48	48	48	48	48	*	*	*	*
		30	48	48	48	48	48	*	*	*	*	*	*
		35	48	48	48	48	*	*	*	*	*	*	*
		40	48	48	*	*	*	*	*	*	*	*	*
		45	48	*	*	*	*	*	*	*	*	*	*
	20	0	36	36	36	36	36	36	36	36	36	36	36
		5	36	36	36	36	36	36	36	36	36	36	36
		10	36	36	36	36	36	36	36	36	36	42	42
		15	36	42	42	42	42	42	48	48	48	48	48
		20	48	48	48	48	48	48	48	48	*	*	*
		25	48	48	48	48	48	48	*	*	*	*	*
		30	48	48	48	*	*	*	*	*	*	*	*
		35	48	48	*	*	*	*	*	*	*	*	*
		40	*	*	*	*	*	*	*	*	*	*	*
		45	*	*	*	*	*	*	*	*	*	*	*
	24	0	36	36	36	36	36	36	36	36	36	36	36
		5	36	36	36	36	36	36	36	36	36	36	36
		10	36	36	36	36	36	36	36	36	36	36	36
		15	36	36	36	36	42	42	42	42	42	42	*
		20	42	42	42	42	42	42	42	*	*	*	*
		25	42	42	42	42	42	*	*	*	*	*	*
		30	42	42	*	*	*	*	*	*	*	*	*
		35	*	*	*	*	*	*	*	*	*	*	*
		40	*	*	*	*	*	*	*	*	*	*	*
		45	*	*	*	*	*	*	*	*	*	*	*

Notes – See Page 5

Table F9 - Soil Class 4

Unbraced Minimum Foundation Depths (in)			Wind Speed (mph)										
Exposure Category	Pier Diameter (in)	Slope (deg)	90	95	100	105	110	120	130	140	150	160	170
D	12	0	36	36	36	36	36	42	42	48	48	48	54
		5	36	36	36	36	36	42	42	42	48	48	54
		10	42	42	42	42	42	48	48	54	54	60	60
		15	48	48	54	54	54	54	54	54	54	54	54
		20	54	54	54	54	54	54	54	54	54	54	54
		25	54	54	54	54	54	54	54	54	*	*	*
		30	54	54	54	54	54	54	*	*	*	*	*
		35	54	54	54	54	54	*	*	*	*	*	*
		40	54	54	54	*	*	*	*	*	*	*	*
		45	54	54	*	*	*	*	*	*	*	*	*
	16	0	36	36	36	36	36	36	36	36	36	42	42
		5	36	36	36	36	36	36	36	36	36	42	42
		10	36	36	36	36	36	42	42	42	42	48	48
		15	42	42	48	48	48	48	48	48	48	48	48
		20	48	48	48	48	48	48	48	48	*	*	*
		25	48	48	48	48	48	48	*	*	*	*	*
		30	48	48	48	48	*	*	*	*	*	*	*
		35	48	48	*	*	*	*	*	*	*	*	*
		40	48	*	*	*	*	*	*	*	*	*	*
		45	*	*	*	*	*	*	*	*	*	*	*
	20	0	36	36	36	36	36	36	36	36	36	36	36
		5	36	36	36	36	36	36	36	36	36	36	36
		10	36	36	36	36	36	36	36	36	42	42	42
		15	42	42	42	42	42	48	48	48	48	48	*
		20	48	48	48	48	48	48	48	*	*	*	*
		25	48	48	48	48	48	*	*	*	*	*	*
		30	48	48	*	*	*	*	*	*	*	*	*
		35	*	*	*	*	*	*	*	*	*	*	*
		40	*	*	*	*	*	*	*	*	*	*	*
		45	*	*	*	*	*	*	*	*	*	*	*
	24	0	36	36	36	36	36	36	36	36	36	36	36
		5	36	36	36	36	36	36	36	36	36	36	36
		10	36	36	36	36	36	36	36	36	36	36	42
		15	36	36	42	42	42	42	42	42	42	*	*
		20	42	42	42	42	42	42	*	*	*	*	*
		25	42	42	42	*	*	*	*	*	*	*	*
		30	*	*	*	*	*	*	*	*	*	*	*
		35	*	*	*	*	*	*	*	*	*	*	*
		40	*	*	*	*	*	*	*	*	*	*	*
		45	*	*	*	*	*	*	*	*	*	*	*

Notes – See Page 5

Table F10 - Soil Class 4

Braced Minimum Foundation Depths (in)			Wind Speed (mph)										
Exposure Category	Pier Diameter (in)	Slope (deg)	90	95	100	105	110	120	130	140	150	160	170
B	12	0	36	36	36	36	36	36	36	36	36	36	42
		5	36	36	36	36	36	36	36	36	36	42	42
		10	36	36	36	36	36	36	42	42	48	48	54
		15	36	42	42	42	42	42	48	48	54	54	60
		20	42	48	48	48	48	54	54	54	60	60	66
		25	48	54	54	54	54	60	60	60	66	66	72
		30	54	60	60	60	60	66	66	72	72	72	78
		35	60	60	66	66	66	72	72	78	78	78	84
		40	66	66	66	72	72	72	78	78	84	84	90
		45	72	72	72	78	78	78	84	90	90	90	96
	16	0	36	36	36	36	36	36	36	36	36	36	36
		5	36	36	36	36	36	36	36	36	36	36	36
		10	36	36	36	36	36	36	36	36	36	36	42
		15	36	36	36	36	36	36	42	42	42	42	48
		20	36	42	42	42	42	48	48	48	48	54	54
		25	42	48	48	48	48	54	54	54	54	60	60
		30	48	48	54	54	54	54	60	60	66	66	66
		35	54	54	54	54	60	60	66	66	66	72	72
		40	54	60	60	60	60	66	66	72	72	78	78
		45	60	60	66	66	66	72	72	78	78	84	84
	20	0	36	36	36	36	36	36	36	36	36	36	36
		5	36	36	36	36	36	36	36	36	36	36	36
		10	36	36	36	36	36	36	36	36	36	36	36
		15	36	36	36	36	36	36	36	36	42	42	42
		20	36	36	36	36	42	42	42	42	48	48	48
		25	42	42	42	42	42	48	48	48	54	54	54
		30	42	48	48	48	48	54	54	54	60	60	60
		35	48	48	48	54	54	54	60	60	60	66	66
		40	54	54	54	54	54	60	60	66	66	66	72
		45	54	54	60	60	60	66	66	66	72	72	78
	24	0	36	36	36	36	36	36	36	36	36	36	36
		5	36	36	36	36	36	36	36	36	36	36	36
		10	36	36	36	36	36	36	36	36	36	36	36
		15	36	36	36	36	36	36	36	36	36	36	36
		20	36	36	36	36	36	36	42	42	42	42	42
		25	36	36	42	42	42	42	42	48	48	48	48
		30	42	42	42	42	48	48	48	54	54	54	54
		35	42	48	48	48	48	48	54	54	54	60	60
		40	48	48	48	54	54	54	54	60	60	60	66
		45	48	54	54	54	54	60	60	66	66	66	72

Notes – See Page 5

Table F11 - Soil Class 4

Braced Minimum Foundation Depths (in)			Wind Speed (mph)										
Exposure Category	Pier Diameter (in)	Slope (deg)	90	95	100	105	110	120	130	140	150	160	170
C	12	0	36	36	36	36	36	36	36	42	42	48	48
		5	36	36	36	36	36	36	42	42	48	48	48
		10	36	36	36	42	42	42	48	54	54	60	60
		15	42	42	42	48	48	54	54	60	66	66	72
		20	48	48	54	54	54	54	60	66	72	72	78
		25	54	60	60	60	60	66	66	72	72	78	78
		30	60	66	66	66	66	72	72	78	78	84	84
		35	66	66	72	72	72	78	78	84	84	90	90
		40	72	72	78	78	78	84	84	90	90	96	96
		45	78	78	84	84	84	90	90	96	*	*	*
	16	0	36	36	36	36	36	36	36	36	36	36	36
		5	36	36	36	36	36	36	36	36	36	36	42
		10	36	36	36	36	36	36	36	42	42	42	48
		15	36	36	42	42	42	42	42	48	48	48	54
		20	42	42	48	48	48	48	54	54	54	54	60
		25	48	48	54	54	54	54	60	60	60	66	66
		30	54	54	60	60	60	60	66	66	72	72	72
		35	60	60	60	66	66	66	72	72	72	78	78
		40	60	66	66	66	72	72	78	78	78	84	84
		45	66	72	72	72	72	78	78	84	84	90	90
	20	0	36	36	36	36	36	36	36	36	36	36	36
		5	36	36	36	36	36	36	36	36	36	36	36
		10	36	36	36	36	36	36	36	36	36	36	36
		15	36	36	36	36	36	36	42	42	42	42	48
		20	42	42	42	42	42	42	48	48	48	54	54
		25	42	48	48	48	48	54	54	54	54	60	60
		30	48	48	54	54	54	54	60	60	66	66	66
		35	54	54	54	60	60	60	66	66	66	72	72
		40	54	60	60	60	60	66	66	72	72	72	78
		45	60	60	66	66	66	72	72	78	78	78	84
	24	0	36	36	36	36	36	36	36	36	36	36	36
		5	36	36	36	36	36	36	36	36	36	36	36
		10	36	36	36	36	36	36	36	36	36	36	36
		15	36	36	36	36	36	36	36	36	42	42	42
		20	36	36	36	36	42	42	42	42	48	48	48
		25	42	42	42	42	48	48	48	48	54	54	54
		30	48	48	48	48	48	54	54	54	60	60	60
		35	48	48	54	54	54	54	60	60	60	66	66
		40	54	54	54	54	60	60	60	66	66	66	72
		45	54	60	60	60	60	66	66	72	72	72	78

Notes – See Page 5

Table F12 - Soil Class 4

Braced Minimum Foundation Depths (in)			Wind Speed (mph)										
Exposure Category	Pier Diameter (in)	Slope (deg)	90	95	100	105	110	120	130	140	150	160	170
D	12	0	36	36	36	36	36	42	42	48	48	48	54
		5	36	36	36	36	36	42	42	48	48	54	54
		10	36	42	42	42	48	48	54	54	60	66	66
		15	42	48	48	48	54	54	60	66	72	72	78
		20	54	54	54	54	54	60	66	72	78	78	84
		25	60	60	60	66	66	66	72	72	78	84	90
		30	66	66	66	72	72	78	78	78	84	84	90
		35	72	72	72	78	78	78	84	84	90	90	96
		40	78	78	78	78	84	84	90	96	96	*	*
		45	78	84	84	90	90	96	96	*	*	*	*
	16	0	36	36	36	36	36	36	36	36	36	42	42
		5	36	36	36	36	36	36	36	36	36	42	42
		10	36	36	36	36	36	36	42	42	48	48	54
		15	36	42	42	42	42	42	48	48	54	54	60
		20	48	48	48	48	48	54	54	54	60	60	66
		25	54	54	54	54	54	60	60	66	66	66	72
		30	60	60	60	60	66	66	66	72	72	78	78
		35	60	60	66	66	66	72	72	78	78	78	84
		40	66	66	72	72	72	78	78	84	84	90	90
		45	72	72	72	78	78	84	84	90	90	96	96
	20	0	36	36	36	36	36	36	36	36	36	36	36
		5	36	36	36	36	36	36	36	36	36	36	36
		10	36	36	36	36	36	36	36	36	36	42	42
		15	36	36	36	36	36	42	42	42	42	48	48
		20	42	42	42	42	48	48	48	48	54	54	54
		25	48	48	48	48	54	54	54	60	60	60	60
		30	54	54	54	54	60	60	60	66	66	66	72
		35	54	54	60	60	60	66	66	66	72	72	78
		40	60	60	60	66	66	66	72	72	78	78	78
		45	66	66	66	72	72	72	78	78	84	84	90
	24	0	36	36	36	36	36	36	36	36	36	36	36
		5	36	36	36	36	36	36	36	36	36	36	36
		10	36	36	36	36	36	36	36	36	36	36	36
		15	36	36	36	36	36	36	36	42	42	42	42
		20	36	36	42	42	42	42	48	48	48	48	54
		25	42	42	48	48	48	48	54	54	54	54	60
		30	48	48	48	54	54	54	54	60	60	60	66
		35	54	54	54	54	54	60	60	66	66	66	72
		40	54	54	60	60	60	60	66	66	72	72	72
		45	60	60	60	66	66	66	72	72	78	78	78

Notes – See Page 5

TAMARACK SOLAR PRODUCTS

GROUND MOUNT

SOLAR MOUNTING SYSTEM

SHOWING TYPICAL PIPE BASED GROUND MOUNT STRUCTURE CONFIGURATION

TORQUE ALL FASTENERS TO 12 FT-LBS

TORQUE ALL HOLLAENDER SET SCREWS TO HOLLAENDER SPECIFICATIONS

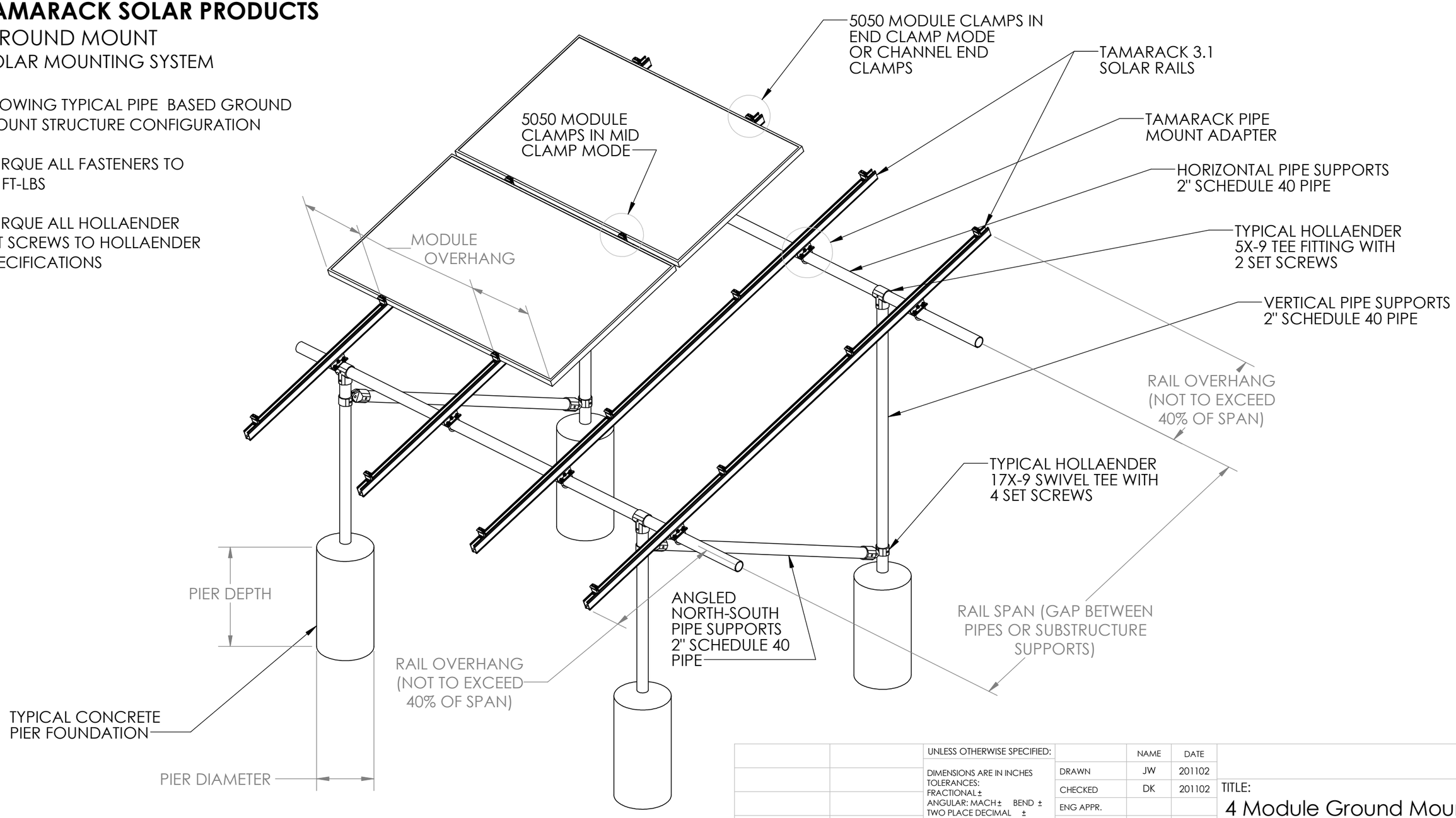

PROPRIETARY AND CONFIDENTIAL

THE INFORMATION CONTAINED IN THIS DRAWING IS THE SOLE PROPERTY OF <INSERT COMPANY NAME HERE>. ANY REPRODUCTION IN PART OR AS A WHOLE WITHOUT THE WRITTEN PERMISSION OF <INSERT COMPANY NAME HERE> IS PROHIBITED.

		UNLESS OTHERWISE SPECIFIED:
		DIMENSIONS ARE IN INCHES TOLERANCES: FRACTIONAL ± ANGULAR: MACH ± BEND ± TWO PLACE DECIMAL ± THREE PLACE DECIMAL ±
		INTERPRET GEOMETRIC TOLERANCING PER:
		MATERIAL
NEXT ASSY	USED ON	FINISH
APPLICATION		DO NOT SCALE DRAWING

	NAME	DATE
DRAWN	JW	201102
CHECKED	DK	201102
ENG APPR.		
MFG APPR.		
Q.A.		

COMMENTS:

TITLE:

4 Module Ground Mount System 3.1 Rail

SIZE	DWG. NO.	REV
B	GM-4M3R	B

SCALE: DNS | WEIGHT: | SHEET 1 OF 4

TAMARACK SOLAR PRODUCTS

GROUND MOUNT

SOLAR MOUNTING SYSTEM

SHOWING 3.1" SYSTEM RAILS, SPLICES MOUNTS, AND 5050 MODULE CLAMPS (WORK IN MID OR END CONDITION).

CHANNEL END CLAMPS ARE NOT COMPATIBLE WITH THE 3.1 RAIL

SHOWN WITH PIPE MOUNT, WHICH CLAMPS THE RAILS TO STANDARD 2" SCHEDULE 40 PIPE (PIPE NOT SHOWN IN RENDERINGS)

TORQUE ALL FASTENERS TO 12 FT-LBS

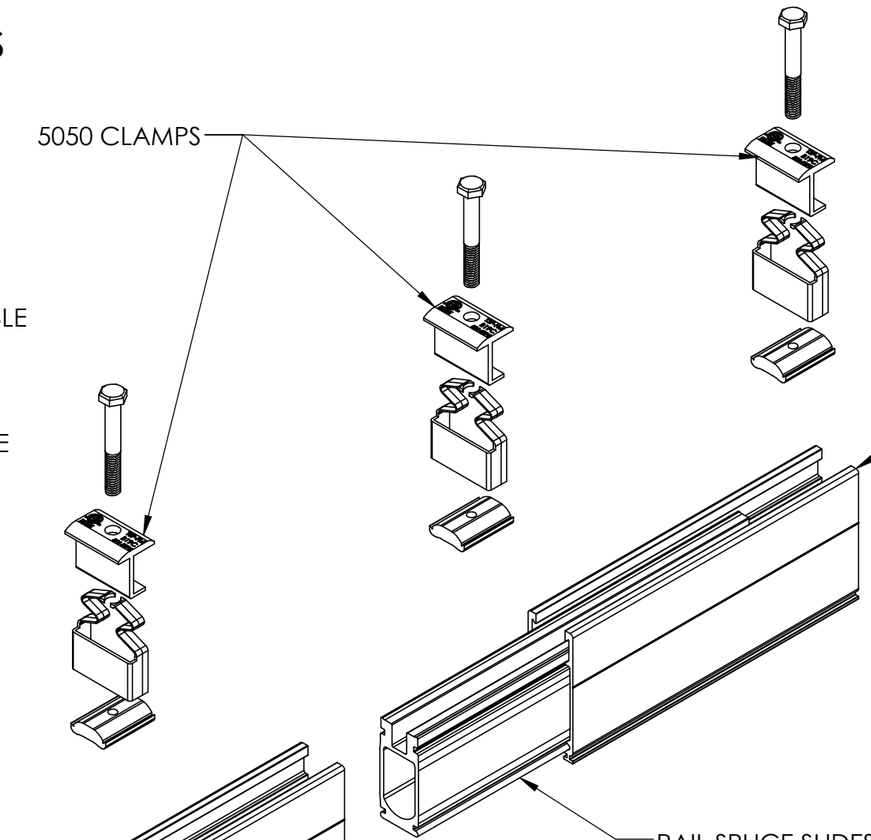

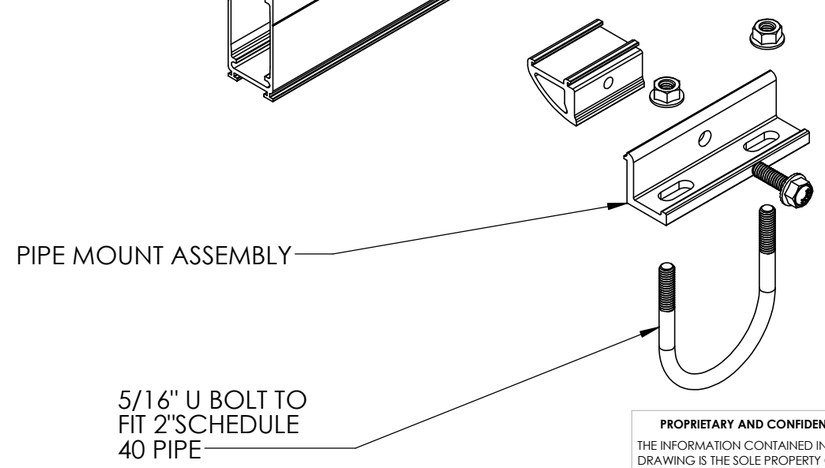

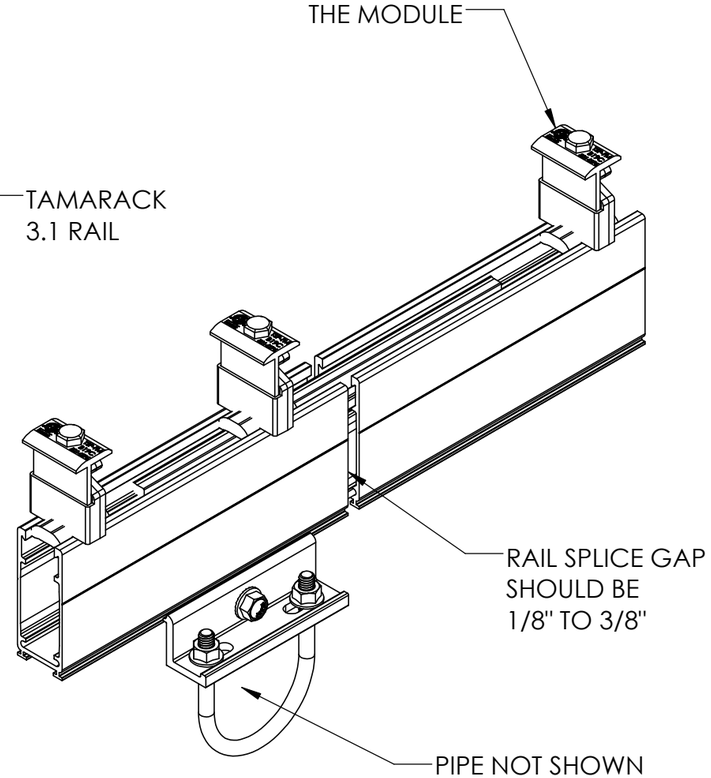

PROPRIETARY AND CONFIDENTIAL

THE INFORMATION CONTAINED IN THIS DRAWING IS THE SOLE PROPERTY OF <INSERT COMPANY NAME HERE>. ANY REPRODUCTION IN PART OR AS A WHOLE WITHOUT THE WRITTEN PERMISSION OF <INSERT COMPANY NAME HERE> IS PROHIBITED.

NEXT ASSY	USED ON
APPLICATION	

UNLESS OTHERWISE SPECIFIED:

DIMENSIONS ARE IN INCHES
TOLERANCES:
FRACTIONAL ±
ANGULAR: MACH ± BEND ±
TWO PLACE DECIMAL ±
THREE PLACE DECIMAL ±

INTERPRET GEOMETRIC TOLERANCING PER:

MATERIAL

FINISH

DO NOT SCALE DRAWING

	NAME	DATE
DRAWN	JW	201102
CHECKED	DK	201102
ENG APPR.		
MFG APPR.		
Q.A.		

COMMENTS:

TITLE:

4 Module Ground Mount System 3.1 Rail

SIZE	DWG. NO.	REV
B	GM-4M3R	B

SCALE: DNS | WEIGHT: | SHEET 2 OF 4

TAMARACK SOLAR PRODUCTS

GROUND MOUNT
SOLAR MOUNTING SYSTEM

MODULE CLAMP DETAILS

5050 CLAMPS CAN BE INSTALLED IN EITHER MID OR END CLAMP CONDITIONS AS SHOWN. HALF INCH MODULE GAP. IN END CONDITION OPEN SIDE OF PLASTIC SPRING SHOULD FACE IN TO THE MODULE AS SHOWN

CHANNEL END CLAMPS ARE NOT COMPATIBLE WITH 3.1 RAIL

TORQUE ALL FASTENERS TO 12 FT-LBS

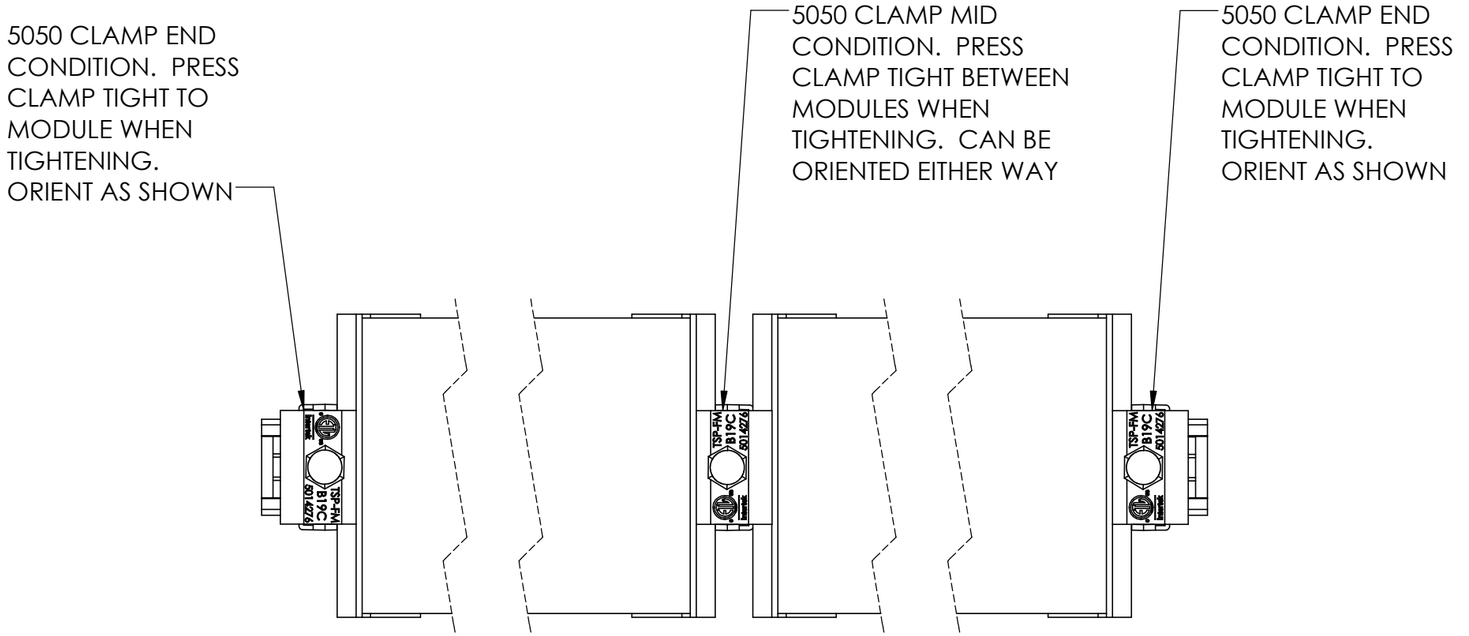

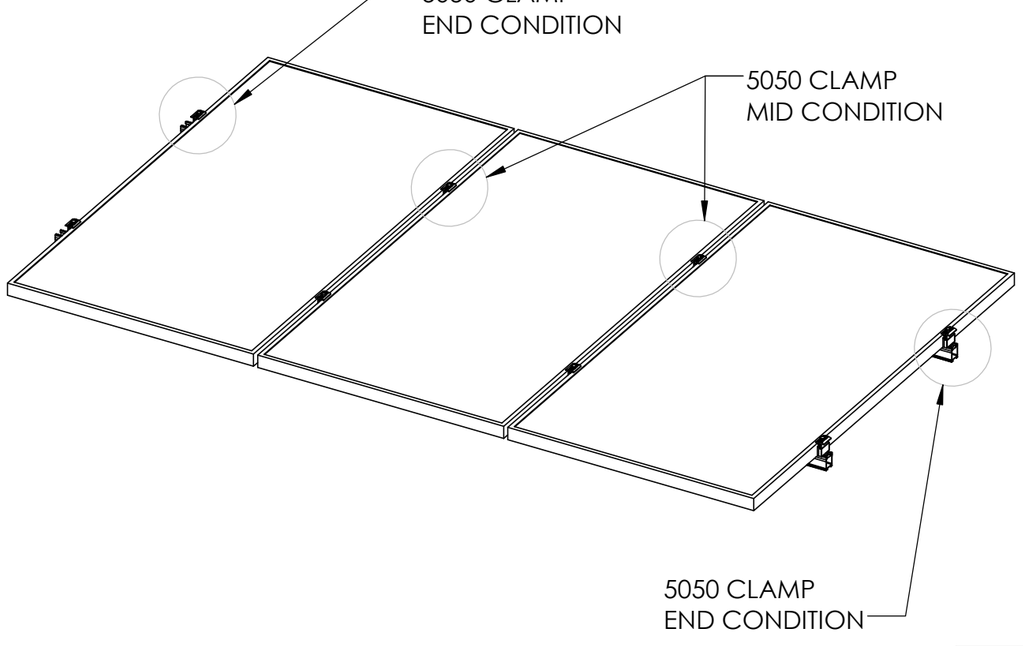

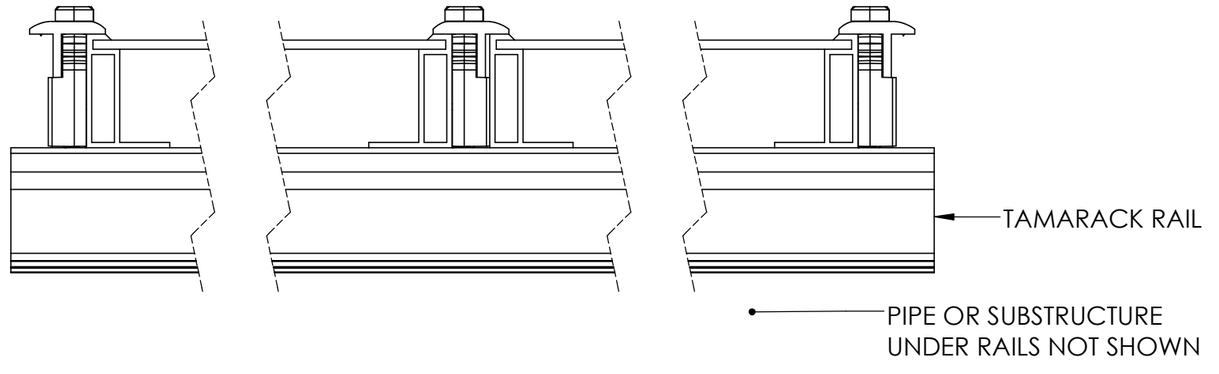

PROPRIETARY AND CONFIDENTIAL

THE INFORMATION CONTAINED IN THIS DRAWING IS THE SOLE PROPERTY OF <INSERT COMPANY NAME HERE>. ANY REPRODUCTION IN PART OR AS A WHOLE WITHOUT THE WRITTEN PERMISSION OF <INSERT COMPANY NAME HERE> IS PROHIBITED.

		UNLESS OTHERWISE SPECIFIED:
		DIMENSIONS ARE IN INCHES TOLERANCES: FRACTIONAL ± ANGULAR: MACH ± BEND ± TWO PLACE DECIMAL ± THREE PLACE DECIMAL ±
		INTERPRET GEOMETRIC TOLERANCING PER:
		MATERIAL
NEXT ASSY	USED ON	FINISH
APPLICATION		DO NOT SCALE DRAWING

	NAME	DATE
DRAWN	JW	201102
CHECKED	DK	201102
ENG APPR.		
MFG APPR.		
Q.A.		

COMMENTS:

TITLE:
4 Module Ground Mount System 3.1 Rail

SIZE	DWG. NO.	REV
B	GM-4M3R	B
SCALE: DNS	WEIGHT:	SHEET 3 OF 4

TAMARACK SOLAR PRODUCTS

GROUND MOUNT

SOLAR MOUNTING SYSTEM

TYPICAL CONFIGURATION OF ARRAY WITH
4 MODULE COLUMNS, 2 RAILS PER COLUMN

REFER TO STRUCTURAL ENGINEERING TABLES
FOR PIER AND SPAN VALUES BASED ON LOCAL
DESIGN VALUES.

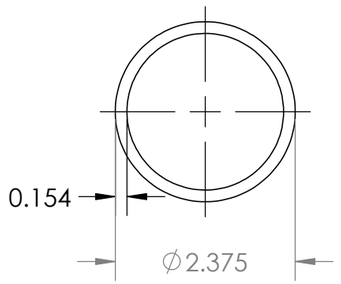

APPROVED 2" PIPE
SPECIFICATIONS:

ASTM A53 GR B
35 KSI MINIMUM YIELD STRENGTH
HOT DIPPED GALVANIZED

OUTSIDE DIAMETER: 2.375"
WALL THICKNESS: 0.154"

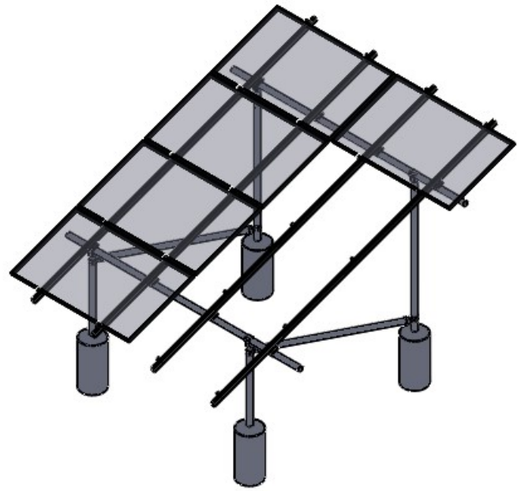

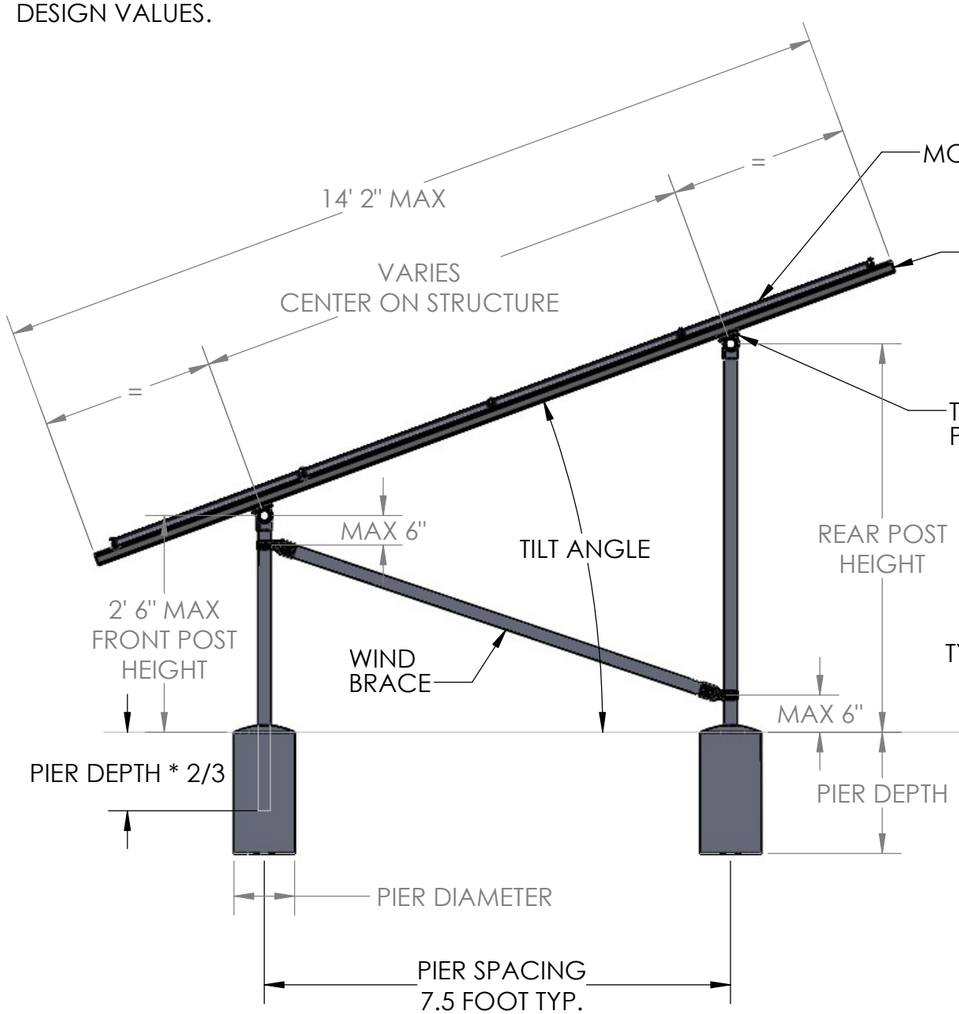

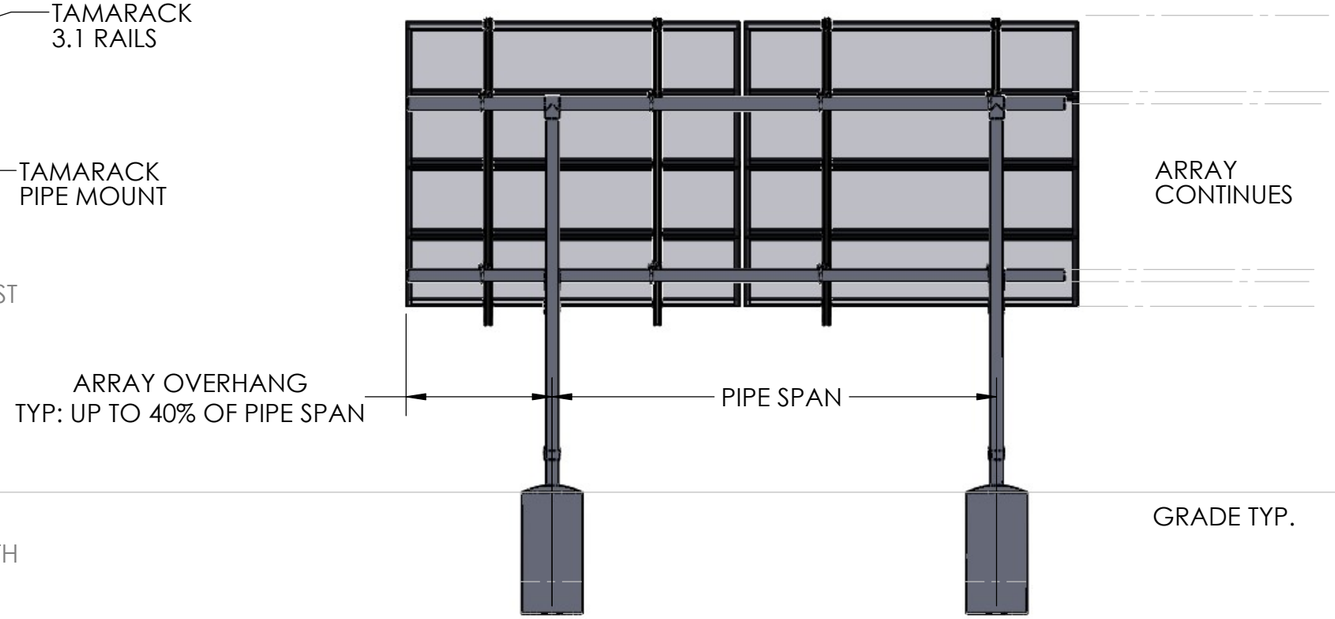

PROPRIETARY AND CONFIDENTIAL

THE INFORMATION CONTAINED IN THIS DRAWING IS THE SOLE PROPERTY OF <INSERT COMPANY NAME HERE>. ANY REPRODUCTION IN PART OR AS A WHOLE WITHOUT THE WRITTEN PERMISSION OF <INSERT COMPANY NAME HERE> IS PROHIBITED.

		UNLESS OTHERWISE SPECIFIED:
		DIMENSIONS ARE IN INCHES TOLERANCES: FRACTIONAL ± ANGULAR: MACH ± BEND ± TWO PLACE DECIMAL ± THREE PLACE DECIMAL ±
		INTERPRET GEOMETRIC TOLERANCING PER:
		MATERIAL
NEXT ASSY	USED ON	FINISH
APPLICATION		DO NOT SCALE DRAWING

	NAME	DATE
DRAWN	JW	201102
CHECKED	DK	201102
ENG APPR.		
MFG APPR.		
Q.A.		
COMMENTS:		

TITLE:
4 Module Ground Mount
System 3.1 Rail

SIZE	DWG. NO.	REV
B	GM-4M3R	B

SCALE: DNS WEIGHT: SHEET 4 OF 4